RESEARCH REPORT

Lateral Bracing of Residential Concrete Foundation Walls

Canada

CMHC SCHL
HOME TO CANADIANS

CMHC—HOME TO CANADIANS

Canada Mortgage and Housing Corporation (CMHC) has been Canada's national housing agency for more than 60 years.

Together with other housing stakeholders, we help ensure that Canada maintains one of the best housing systems in the world. We are committed to helping Canadians access a wide choice of quality, affordable homes, while making vibrant, healthy communities and cities a reality across the country.

For more information, visit our website at **www.cmhc.ca**

You can also reach us by phone at 1-800-668-2642 or by fax at 1-800-245-9274.

Outside Canada call 613-748-2003 or fax to 613-748-2016.

Canada Mortgage and Housing Corporation supports the Government of Canada policy on access to information for people with disabilities. If you wish to obtain this publication in alternative formats, call 1-800-668-2642.

LATERAL BRACING OF RESIDENTIAL CONCRETE FOUNDATION WALLS

BEARDEN ENGINEERING CONSULTANTS LTD.

per: Kelly Grubb, M. Eng., P. Eng.

Reviewed by Terry Bearden, M. A. Sc., P. Eng.

PROFESSIONAL ENGINEER ALBERTA
KELLY GRUBB
DEC 22/98

PERMIT TO PRACTICE
BEARDEN ENGINEERING CONSULTANTS LTD.
Signature
Date DEC. 22/98
PERMIT NUMBER: P 2427
The Association of Professional Engineers, Geologists and Geophysicists of Alberta

LATERAL BRACING OF RESIDENTIAL CONCRETE FOUNDATION WALLS

By Kelly Grubb M. Eng., P. Eng.

December 22, 1998

CMHC Project Manager: Darrel R. Smith

DISCLAIMER

Purpose

The purpose of this lateral bracing study was to investigate the structural adequacy of typical concrete residential foundation walls to resist lateral earth pressures. The study was limited to 8" (203mm) thick concrete walls 8'-0" (2.44m) and 9'-0" (2.74m) high subject to three backfill soil types commonly encountered in Alberta. As well, the study included the code-specified minimum backfill pressure for comparison with the recommended earth pressure envelopes.

The two overall objectives to be achieved were:

- To identify the adequacy of current construction practices to resist lateral movement of standard concrete foundation walls.

- To develop detailed, generic, practical, and cost effective solutions, certified by a qualified structural engineer registered in Alberta, of lateral bracing construction details for concrete foundation walls at the wall-floor interface, where such systems require additional support.

Acknowledgements

The author would like to thank the members of the Alberta Housing Industry Technical Committee for their direction and comments during the various phases of the project.

As well, the financial assistance provided by the following organizations is greatly appreciated:

- Canada Mortgage and Housing Corporation (CMHC)
- Alberta Economic Development and Tourism
- Wood I-Joist Manufacturers' Association (WIJMA)

Also, the assistance of the six geotechnical engineering firms who helped to provide valuable input into the definition of the design earth pressures is appreciated. The firms who provided typical soil pressure parameters were:

- AGRA Earth & Environmental, Red Deer
- J.A. Smith & Associates, Calgary
- J.R. Paine & Associates Ltd., Edmonton
- Sabatini Geotechnical Inc., Calgary
- Shelby Engineering Ltd., Edmonton
- Thurber Engineering Ltd., Edmonton

Executive Summary

At the request of the Alberta Housing Industry Technical Committee (AHITC) this study was initiated to investigate the structural adequacy of typical concrete residential foundation walls to resist lateral earth pressures.

The study objectives were to include a review of the adequacy of current construction practices to resist lateral earth pressures. Both 8'-0" (2.44m) high and 9'-0" (2.74m) high concrete foundation walls were examined subject to four different backfill pressure intensities, and various backfill heights. Then, based on the results of the investigation, the second objective was to develop detailed, generic, practical, and cost effective solutions of lateral bracing details for the top of wall connections, where such details are required. These lateral bracing details were to be applicable to both conventional and manufactured wood floor systems.

Overall the scope of the project was limited to typically constructed, residential concrete foundation walls 8" (200mm) thick by either 8'-0" (2.44m) or 9'-0" (2.74m) high. Maximum sidewall and endwall dimensions of 60'-0" (18.3m) and 30'-0" (9.14m) respectively were assumed. As well, deviations in the wall including short angled walls, beam pockets, areas adjacent to stairwell openings and areas surrounding large windows were studied.
Based on the results of the study, a number of interesting points were revealed:

1. The recommended lateral earth pressures are significantly higher than the building code specified minimum value.

2. The nominal strength of the concrete wall is substantial and therefore vertical reinforcement may not be required in many situations; however for high backfills, suggestions for reinforcement are made.

3. The industry standard practice for top of wall connections is in general not adequate to resist the calculated lateral forces. Recommendations for improving this connection are made.

4. The use of short angled walls and beam pockets to laterally stabilize the wall were found to be neither practical nor effective ways to provide the required support.

5. The effects of window openings in the wall and stairwell openings adjacent to the wall were examined and recommendations for local reinforcement around these areas are provided, as well as lateral bracing requirements each side of such areas.

The recommendations for construction requirements for lateral bracing of residential foundation walls are summarized in Section 10 of the report. These include recommended details for 8'-0" (2.44m) and 9'-0" (2.74m) high walls subject to various backfill types and heights. As well, recommendations for construction and lateral support of localized areas around window openings and stairwells are included.

Table of Contents

List of Tables and Figures

cont'd

Objet

La présente étude de contreventement latéral a pour objet d'examiner la résistance des murs de fondation résidentiels types en béton contre les pressions du sol. L'étude était limitée à des murs en béton d'une épaisseur de 8 po (203 mm) et d'une hauteur de 8 pi (2,44 m) et de 9 pi (2,74 m) assujettis à trois types de sol de remblai qu'on trouve communément en Alberta. En outre, la pression minimum de remblai spécifiée par le Code a été comparée aux enveloppes de pression de sol recommandées.

Les deux objectifs généraux étaient :

- Établir la résistance des constructions courantes au mouvement latéral des murs de fondation standards en béton.

- Mettre au point des solutions détaillées, génériques, pratiques et rentables, certifiées par un ingénieur de structure qualifié en Alberta, pour le contreventement latéral des détails de construction des murs de fondation en béton à la jonction des murs et des planchers, où ces assemblages nécessitent un support supplémentaire.

Sommaire

À la demande du Alberta Housing Industry Technical Committee (AHITC), cette étude a été réalisée pour examiner la résistance des murs de fondation résidentiels types en béton contre les pressions latérales du sol.

Les objectifs de l'étude étaient d'abord d'établir la résistance des constructions courantes aux pressions latérales des sols. Des murs de fondation en béton d'une épaisseur de 8 po (203 mm) et d'une hauteur de 8 pi (2,44 m) et de 9 pi (2,74 m) ont été scrutés sous quatre différentes pressions de remblai et à différentes hauteurs de remblai. Ensuite, suite aux résultats de l'investigation, un deuxième objectif était d'apporter des solutions détaillées, génériques, pratiques et rentables relativement aux détails de contreventement latéral dans la partie supérieure des jonctions murales, où ces détails sont requis. Ces détails de contreventement latéral devaient être applicables tant à des assemblages de planchers à ossature classique qu'à des assemblages à solives de bois en I.

Dans l'ensemble, la portée du projet était restreinte à des murs de fondation en béton d'une épaisseur de 8 po (200 mm) et d'une hauteur de 8 pi (2,44 m) et de 9 pi (2,74 m). Les dimensions maximums des murs latéraux et d'extrémité de 60 pi (18,3 m) et de 30 pi (9,14 m) étaient présumées respectivement. De plus, des déviations dans le mur, à savoir murets en angle, retranches, aires contiguës aux cages d'escalier et aires entourant les grandes fenêtres ont été examinées. L'étude a révélé des éléments fort intéressants :

1. Les pressions latérales de sol recommandées sont sensiblement plus élevées que les valeurs minimums spécifiées dans le Code du bâtiment.

2 La résistance nominale du mur de béton est appréciable, si bien qu'il ne serait pas nécessaire dans bien des cas de faire de renfort vertical; toutefois, quant aux remblais élevés, un renforcement est à conseiller.

3. La méthode communément employée par l'industrie pour le dessus des jonctions murales n'est généralement pas adéquate pour résister aux forces latérales calculées. Il est donc recommandé d'améliorer ce raccordement.

4. L'utilisation de murets en angle et de retranches pour stabiliser le mur latéralement s'est révélée ni pratique ni efficace pour fournir le soutien nécessaire.

5. Après avoir étudié les effets des ouvertures pratiquées dans les murs pour les fenêtres et les escaliers près des murs, il est recommandé de renforcer le pourtour des fenêtres, ainsi que de prévoir un contreventement latéral des deux côtés.

Les recommandations concernant les exigences relatives au contreventement latéral des murs de fondation résidentiels sont résumées à la section 10 du rapport. Elles comprennent les détails recommandés pour les murs d'une hauteur de 8 pi (2,44 m) et de 9 pi (2,74 m) pour divers types

et hauteurs de remblai. On y trouvera aussi des recommandations sur la construction et le support latéral du pourtour des ouvertures de fenêtres et d'escalier.

CMHC SCHL

National Office
700 Montreal Road
Ottawa ON K1A 0P7
Telephone: (613) 748-2000

Bureau national
700 chemin de Montréal
Ottawa ON K1A 0P7
Téléphone : (613) 748-2000

Puisqu'on prévoit une demande restreinte pour ce document de recherche, seul le résumé a été traduit.

La SCHL fera traduire le document si la demande le justifie.

Pour nous aider à déterminer si la demande justifie que ce rapport soit traduit en français, veuillez remplir la partie ci-dessous et la retourner à l'adresse suivante :

Centre canadien de documentation sur l'habitation
Société canadienne d'hypothèques et de logement
700, chemin Montréal, bureau C1-200
Ottawa (Ontario)
K1A 0P7

Titre du rapport: _____

_____

Je préférerais que ce rapport soit disponible en français.

NOM _____

ADRESSE _____
rue App.

_____
ville province Code postal

No de téléphone ( ) _____

Introduction

At the request of the Alberta Housing Industry Technical Committee this study was undertaken to investigate the structural adequacy of typical concrete residential foundation walls to resist lateral earth pressures. The scope of the study was limited to 8" (200mm) thick concrete walls 8'-0" (2.44m) and 9'-0" (2.74m) high, subject to three backfill soil types commonly encountered in Alberta. As well, the Alberta Building Code 1997 specified minimum backfill pressure was included in the study for comparison purposes.

The main objectives of this study were to:

- Review the adequacy of current construction practices to resist lateral movement of standard concrete foundation walls, subject to backfills of various heights.

- To develop detailed, generic, practical and cost effective solutions certified by a qualified structural engineer registered in Alberta, of lateral bracing construction details of the top of wall connection, where systems require additional support.

In order to complete these objectives, a systematic approach was utilized covering the following sections of the report.

1. In "Section 1 - Lateral Earth Pressures", earth pressure theories were reviewed and several geotechnical engineers surveyed to establish the lateral pressures to be used in the study.

2. In "Section 2 - Residential Foundation Construction", the industry standard construction practices as well as building code minimum standards were reviewed to establish a typical foundation for analysis.

3. In "Section 3 - Foundation Design Properties", the nominal and factored design properties of the concrete walls are calculated for use in the analysis.

4. In "Section 4 - Definition of Model Parameters", the two model types used for the study are described. Both a traditional 2-D model and a full 3-D finite element model were created and utilized for the study.

5. In "Section 5 - Study Objectives", the specific study objectives are reviewed prior to proceeding with the analysis phase of the study.

6. In "Section 6 - Procedure", the specific steps used to answer the questions posed in the "Objectives" section are outlined.

7. In "Section 7 - Analysis Results", the various output results of the analysis are presented by way of tables and by stress contour plots from the finite element model.

8. "Section 8 - Conclusions", contains a discussion of the various conclusions that were drawn based on the analysis results.

9. Once the conclusions had been made, "Section 9 - Design Solutions" is used to present the process utilized to design practical and effective solutions.

10. "Section 10 - Recommendations and Summary" is to summarize the report including recommended maximum backfill heights, general and localized reinforcement requirements, and recommended lateral bracing details. In short, this section contains a summary of all recommendations established from the study, and will be the section most useful to designers and builders alike.

11. "Appendix A" covers the design approach utilized for each of the components of the top of wall connection. Sample calculations for each component are presented.

12. "Appendix B" covers the design of concrete reinforcement including a sample calculation.

13. "Appendix C" covers the references used in the study.

Section 1
Lateral Earth Pressures

1.1 Introduction

In order to effectively analyze and design the lateral bracing requirements for foundation walls, the nature and magnitude of lateral earth pressures exerted by backfill soil had to be quantified. Various earth pressure theories were researched and a survey was conducted to establish the current industry practice with respect to soil pressure parameters. For the purposes of the study three main soil classifications were utilized including sand/gravel backfill, low plastic clay/silt backfill, and a highly plastic clay backfill. As well, the study included the code specified minimum backfill pressure for comparison with the recommended earth pressure envelopes.

1.2 Theoretical Development

The prediction of lateral earth pressures using mathematic formulae has been studied extensively by many individuals over the years and is thoroughly treated in the references listed in the Bibliography. In general, the state of stress within a soil mass may be predicted using the principles of soil mechanics and an assumed wedge-shaped zone of soil immediately behind the wall. The vertical stress at any point within a homogeneous soil mass may be described by the equation:

$$p_v = \gamma z \quad \begin{cases} \gamma: \text{unit weight of soil (pcf)} \\ z: \text{depth below surface (feet)} \end{cases}$$

If the soil mass is at rest it can deform vertically under load but cannot expand laterally because of the adjacent soil; this is equivalent to placing the soil adjacent to an immovable, frictionless vertical surface (foundation wall in our case). Then, the relationship between the vertical stress in the soil and the corresponding lateral pressure exerted on the wall is described by the equation of solid mechanics and is related to the Poisson's ratio of the material under consideration. For the condition of zero lateral strain (immovable wall) within the material, the vertical and horizontal stresses are related by the following equation of solid mechanics:

$$\Delta\sigma_x = \left(\frac{\nu}{1-\nu}\right) \Delta\sigma_z$$

Typically this horizontal earth pressure exerted in the at-rest state as related to the vertical stress is given the symbol "K_o" and referred to as the "coefficient of earth pressure at rest." For the design of basement walls which are not allowed to move, geotechnical engineers recommend the use of horizontal design pressures which are described by the coefficient K_o. In relation to the angle of internal friction of the soil "ϕ", K_o is as described below:

$K_o = 1 - \sin\phi$ for cohesionless soils

and $K_o = 0.95 - \sin\phi$ for normally consolidated clays.

For clays which at some point throughout its geological history have been subjected to higher overburden pressure than at the present (over-consolidated), the value of K_o may be as high as 2.0 or 3.0. Therefore the geological history of a site is an important factor in foundation design.

1.3 Limitations of Soil Pressure Theory

The main limitation in the prediction of lateral earth pressures applied to foundation walls remains the variability of the soil itself and its non-homogeneous nature. Even within soils of similar classification, a range of values can be expected depending on grain size and distribution, grain composition, moisture content, geological history, and many other factors. Variability within a given soil classification is particularly evident within cohesive soils such as clays and silts. Since it is not practical to perform extensive soil testing on each residential site, generalizations regarding each soil type were made based on experience, and the results from the survey of practicing geotechnical engineers..

1.4 Current Practice in Alberta

To assist in the definition of reasonable lateral earth pressure coefficients, six prominent geotechnical consulting firms were surveyed. The firms contacted recommended the use of the coefficient of earth pressure at rest "K_o" for the prediction of lateral earth pressures against foundation walls with an equation of the form:

coefficient of earth pressure at-rest unit weight of soil (pcf)

$$P_h = K_o \gamma z$$

depth below backfill surface (feet)

horizontal static earth pressure at depth z (psf)

This equation results in a triangular soil pressure distribution as shown in Figure 1-1.
The above triangular pressure envelope was then used to simulate the forces imposed on a typical concrete foundation wall, using typical values of soil parameter "K_0 " obtained from the survey of geotechnical consultants. Typical soil pressure parameters obtained from the consultants are summarized in Table 1-1 below for each of the main soil types outlined in the project scope. These main soil types were sand/gravel backfill, low plastic silt/clay, and high plastic clay backfill. Also included for comparison purposes is the code specified minimum backfill pressure outlined in Clause 9.4.4.6. of the Alberta Building Code 1997 (ABC 97).

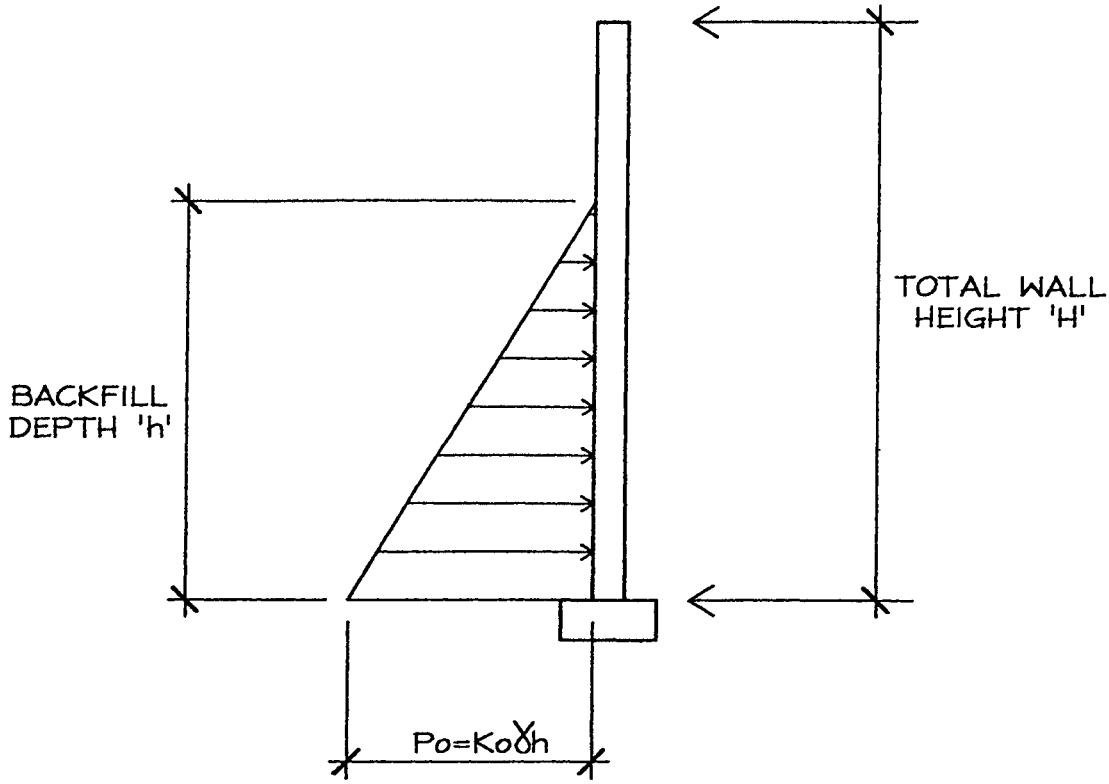

FIGURE 1–1 – SOIL PRESSURE DISTRIBUTION

Table 1-1
Typical Lateral Earth Pressure Coefficients

Soil Type	Unit Weight (kN/m^3) or (pcf)	K_0	Equivalent Fluid Pressure γK_0 (kN/m^3) or (pcf)
Code Specified Minimum Backfill Pressure	–	–	30 or 4.7
Sand/Gravel Backfill	128 or 20	0.45	57 or 8.9
Low Plastic Silt-Clay Backfill	128 or 20	0.50	64 or 10.0
High Plastic Clay Backfill	128 or 20	0.59	76 or 11.9

Notes:
- Values assume drainage system in place to prevent buildup of hydrostatic pressure.
- Soil density assumed to be approximately 95% Standard Proctor Maximum Dry Density.
- Horizontal backfill condition.
- No allowance for frost action is made.
- No allowance for surcharge is made.

As indicated by our soils consultants these values assume typical residential backfill construction whereby soils are placed with minimal compaction effort. Therefore the initial soil density will typically be less than 95% Standard Proctor Maximum Dry Density (SPMDD); however, the final settled density would be around 95% SPMDD after long-term settlement and consolidation. No allowance is made for hydrostatic pressures because an adequate weeping tile drainage system is assumed to be in place. As well, no allowance is made for frost heaving pressures against the wall which can add in the order of 200% more pressure or greater to the wall. Some heat loss through the wall is assumed to occur which will minimize the frost heave potential. Proper site grading and roof water management systems are also very important components of the residential foundation system to prevent saturation of backfill thereby reducing potential for frost heave and swelling of moisture sensitive backfills. It is also important to note that the above lateral earth pressures do not include any allowance for surcharge from driveways or garages which will also increase that lateral loading on the wall.

From the results of the survey, the soil pressure parameters were selected as *typical* representatives for each of the basic soil categories. As with any average some discussion could be made as to whether the values should be raised or lowered; however, the values were chosen by the author to be representative of "average" soils within each of the categories. Given the highly variable nature of soils throughout the province and even within each region it was felt that this was the most reasonable design approach. Particularly in comparison with the present design values, we felt reasonably comfortable using average and not extreme values for each category. However, it should be noted that design pressures for clay backfills and particularly high plastic clays can be extreme and therefore such materials are not ideal for backfilling and should be used with caution.

Section 2
Residential Foundation Construction

2.1 Introduction

For the purposes of this study it was necessary to identify the industry standard and building code minimum construction practices for foundation wall construction, and for connection of floor framing to the top of the foundation wall. This information was required in order to properly evaluate the adequacy of current construction details to resist the lateral earth pressures previously defined in Section 1 of the study.

2.2 Building Code Minimum Standards

The governing minimum construction requirements for residential construction in Alberta at this time are prescribed in the Alberta Building Code 1997 (ABC 97), Part 9, "Housing and Small Buildings." These requirements are based very closely on, and are virtually identical to, the requirements set out in the National Building Code of Canada, 1995, Part 9 "Housing and Small Buildings." With respect to foundation construction requirements, these two codes are virtually identical. The following minimum requirements are outlined:

- Concrete strength - minimum 15 MPa compressive strength @ 28 days.
- Clause 9.4.4.5(1) of the ABC 97 - specifies that "walls supporting drained earth may be designed for pressure equivalent to that exerted by a fluid with a density of not less than 480 kg/m^3 (4.7 kN/m^3) and having a depth equal to that of the retained earth."
- Clause 9.15.4 of the ABC 97 governs the construction requirements of foundation walls which specifies the following maximum backfills for 8" (200mm) thick concrete walls as summarized in Table 2-1.

Table 2-1
Maximum Backfills for 8" (200 mm) Thick Concrete Walls*

Concrete Strength	Laterally Supported At Top	Laterally Unsupported At Top
15MPa	7.05 ft (2.15m)	4 ft (1.20 m)
20MPa	7.54 ft (2.30 m)	4 ft (1.20 m)

*(Based on Table 9.15.4.1.A from ABC 97)

Notes:

1. From this it should be noted that the maximum allowable backfill height permitted by the code is 2.30m (7'-6") even for 250mm (10") and 300mm (12") walls; therefore backfill heights greater than these are not even recognized by the code as in the case of 9'-0" (2.74m) walls.

- Reinforcement of foundation walls - steel reinforcement of concrete foundation walls is not required by the code; however sentence 9.15.4 (3) and Table 9.15.4.1C of the ABC 97 outline minimum reinforcement to be used, if "reinforcement is to be provided to reduce the risk of shrinkage cracking." Such reinforcement is not mandatory, but the code recommends shrinkage steel for an 8" (200mm) wall as 10 M at 12" (305mm) on centre verticals and 10 M at 10" (250mm) on centre horizontals.

- Lateral support - clause 9.15.4.2(2) of the ABC 97 states that "foundation walls shall also be considered supported at the top if the floor system is anchored to the top of the foundation walls with anchor bolts, in which case the joists may run either parallel or perpendicular to the foundation wall." This clause does not make sense for endwalls where joists run parallel to the wall unless blocking is provided, otherwise no support can be mobilized by the floor system (see Figure 2-1). As illustrated in the figure, lateral movement of the wall cannot be resisted by the rigid floor diaphragm above because any movement simply rotates the rim joist, which acts as a hinge point. To correct the situation, blocking perpendicular to the wall must be installed to transfer the load up into the rigid diaphragm above. Incidentally, connection to the outside of the ladder sill is not effective in resisting inward movement of the wall as it will simply tear away from the concrete as the wall moves in. Therefore cross-bridging systems which attach to the rim joist are not effective at transferring lateral load either, because they rely on the outer portion of the ladder sill.

- Anchorage - sentence 9.23.6.1(2) ABC 97 specifies that "anchorage shall be provided by embedding the ends of the first floor joists in concrete, embedding in concrete two 38 x 89 (2 x 4) sill plates placed on edge and separated by blocking spaced 1.2 m (48") on centre, or fastening the sill plate to the foundation with not less than 12.7mm (.5") diameter anchor bolts spaced not more than 2.4 m (8'-0") on centre."

2.3 Typical Industry Standard Practice

In order to establish the current state-of-the-art in foundation construction techniques in residential construction we contacted experienced foundation and framing contractors in the province. Discussions with these contractors supported the basic assumed conditions established in Attachment 1 of the Memorandum of Agreement during Phase I of this study. These assumed conditions were:

- 8" (200mm) thick concrete foundation wall.
- 20 MPa concrete strength @ 28 days.
- Nominally reinforced with 2 - 10 M horizontal steel rebars at top, and 2 - 10 M horizontal steel rebars at bottom of wall.
- 2 x 4 (38 x 89) ladder sill framing with cross blocking spaced at maximum 48" (1200mm) on centre.

Therefore this is the minimum basic configuration used for analysis for this study and is as shown in Figure 2-2.

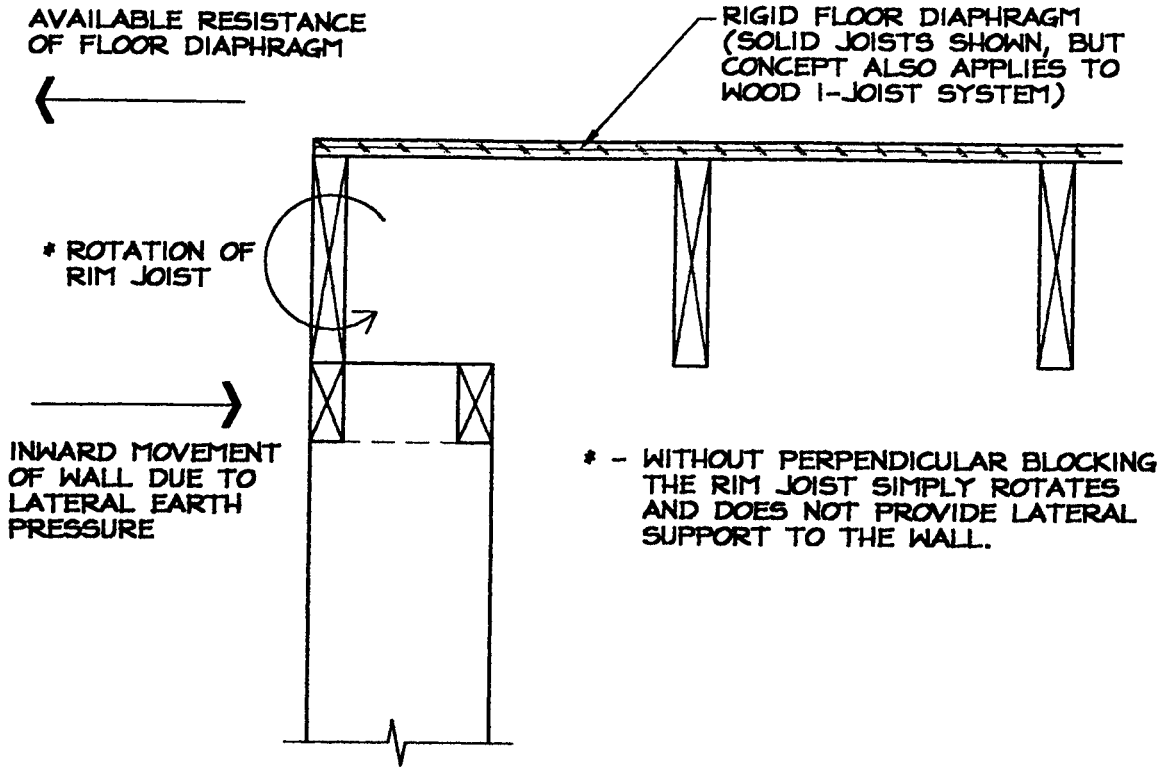

FIGURE 2–1 – TYPICAL ENDWALL HINGE

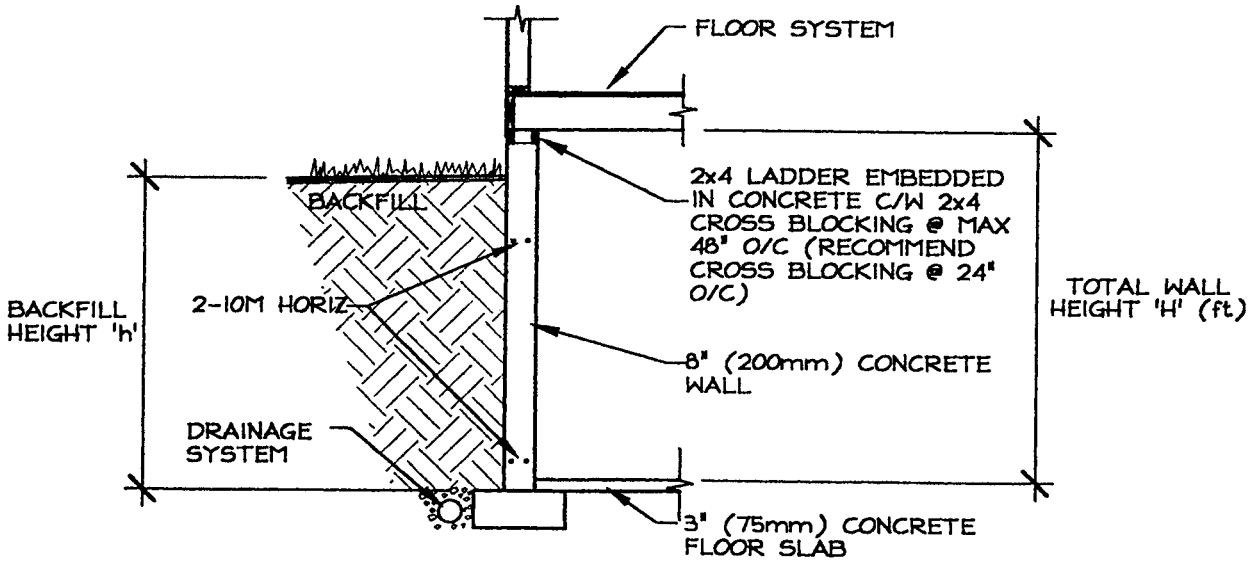

FIGURE 2–2 – TYPICAL FOUNDATION WALL

Section 3
Foundation Design Properties

3.1 Introduction

For the purposes of the study each foundation wall was analyzed as a 1 ft (305mm) wide strip of concrete wall (2-D model) and as a series of 1 ft x 1 ft (305mm by 305mm) plate elements (3-D model). Imperial units were selected for use throughout the study as residential construction is still completed using imperial size components. Metric conversions are shown in parenthesis. Where industry standard practice specifies metric quantities (i.e. MPa) or where formulas specified from CSA codes are metric, the corresponding imperial quantities are added in parenthesis.

3.2 Material Properties

The standard concrete foundation wall examined in the study was assumed to possess a minimum 28 day compressive strength of f'_c = 20 MPa (2900 psi) which is consistent with common industry practice. Concrete with a compressive strength of 20 MPa was calculated, using formulae presented in CSA Standard A23.3-94 "Design of Concrete Structures," to have the following design properties:

modulus of rupture, f_r: $f_r = 0.6\ \lambda \sqrt{f'_c} = 0.6\ (1.0)\ \sqrt{20} = 2.68$ MPa (389 psi)

modulus of elasticity, E: $E = 4500\ \sqrt{f'_c} = 4500\ \sqrt{20} = 20{,}125$ MPa (2900 ksi)

For reinforced concrete section properties a minimum yield strength of f_y = 400 MPa (60 ksi) was used for reinforcing steel. Design of reinforced concrete sections is as per CSA Standard A23.3-94 "Design of Concrete Structures" and is shown in Appendix B of this report.

3.3 Section Properties

The section properties of a typical 1 ft (305mm) design section, 8" (203mm) thick, are as follows:

Area: $A_c = b \cdot d = (12\text{ in})\ (8\text{ in}) = 96\text{ in}^2\ (62 \times 10^3\text{ mm}^2)$

Moment of Inertia: $I_c = \frac{bd^3}{12} = \frac{(12)\ (8)^3}{12} = 512\text{ in}^4\ (213 \times 10^6\text{ mm}^4)$

Section Modulus: $S_c = \frac{bd^2}{6} = \frac{(12)\ (8)^2}{6} = 128\text{ in}^3\ (2.1 \times 10^6\text{ mm}^3)$

Nominal Uncracked Bending Strength:
$M_{nom} = f_r \cdot S_c = (389)\ (128) = 49.8 \times 10^3\text{ lb}\cdot\text{in} = 4150\text{ lb}\cdot\text{ft}\ (5.6\text{ kN}\cdot\text{m})$

3.4 Limit States Design

Analysis and subsequent design of residential concrete foundation walls was carried out based on the limit states design principles established within the Alberta Building Code, 1997. The factored live load due to lateral earth pressure on the walls was calculated using the formula:

Factored Load: $L_f = \gamma \alpha_L L = (0.8)(1.5) L = 1.2 L$

where γ = importance factor, 0.8
α_L = live load factor, 1.5
L = specified load

The use of an importance factor equal to 0.8 instead of 1.0 was deemed to be acceptable, primarily since the cracking of a residential foundation wall is unlikely to cause injury or other extreme consequences. As well, it was felt that this was more in line with typical residential load factors and the level of reliability in residential construction

The implied Factor of Safety (FS) against failure associated with these Limit States Design principles is the ratio of the nominal resistance to the nominal load. Since the actual loads are increased by a factor (factored load) and the actual resistances are decreased by a factor (factored resistance), the ratio of the factored load to factored resistance is the implied Factor of Safety against failure.

For concrete elements, a material resistance factor ϕ_c of 0.6 was utilized in accordance with CSA A23.3-94 "Design of Concret Structures". The implied Factor of Safety (F.S.) for bending of concrete elements was then:

$$F.S. = \frac{\text{load factor}}{\text{resistance factor}} = \frac{(0.8)(1.5)}{0.6} = 2.0$$

For steel components, a material resistance factor ϕ_s of 0.9 was utilized in accordance with CSA Standard S136-94, "Cold Formed Steel Structural Members." The implied Factor of Safety against failure of steel elements was then:

$$F.S. = \frac{1.2}{0.9} = 1.33$$

Finally, for wood components and connections, a material resistance factor ϕ_w was used as specified for each component per CSA Standard 086.1-94, "Engineering Design in Wood (Limit States Design)." As well, since the objective of the study was to examine long term stability of foundation walls, a load duration faction K_D of 0.65 was utilized in all wood related design equations. The implied Factor of Safety against failure of wood connections was:

$$F.S. = \frac{1.2}{0.6} = 2.0 \text{ for nailed connections under permanent load.}$$

Overall, for residential construction, the above implied safety factors against failure were judged to be reasonable considering the current level of design reliability and past performance of typical systems. As with any such judgement, the level of reliability is a professional opinion based on experience and the available information.

Section 4
Definition of Model Parameters

4.1 Introduction

For the purposes of the study, it was necessary to create two types of analytical models of foundation walls. The first one was a standard two dimensional (2-D) model of a foundation wall system designed to span vertically between the floor slab and an assumed top of wall lateral support. This approach is conservative in that it neglects the inherent three dimensional (3-D) plate capacity of a real foundation wall system. Typically, this is the approach that engineers have relied upon for the design of basement walls. The second model type used was a 3-D finite element model created to better simulate the true behaviour of a real foundation wall.

4.2 Simplified Foundation Model (2-D)

The typical approach used in foundation wall design has been to idealize the wall in 2-D as spanning vertically with an assumed lateral support at the bottom (slab), to an assumed lateral support at the top (floor system). Strictly speaking, this idealization only truly applies at an infinite distance from vertical boundary support (perpendicular walls), or where vertical wall cracks have formed and the horizontal bending capacity is zero. Nonetheless, for practical purposes it is useful for predicting wall forces at "some distance" away from perpendicular endwalls and for verifying the results from the 3-D model. One refinement that was included in the simplified approach was the wall self-weight. Traditionally, this has been neglected in basement wall design. The effect of this refinement was to reduce the required top of wall horizontal reaction. Since the weight of the wall remains constant regardless of the backfill height, the effect of this refinement varied for each soil type and backfill height. A summary of the simplified 2-D foundation model is shown below in Figure 4-1, for a 1 ft (305mm) wide design strip.

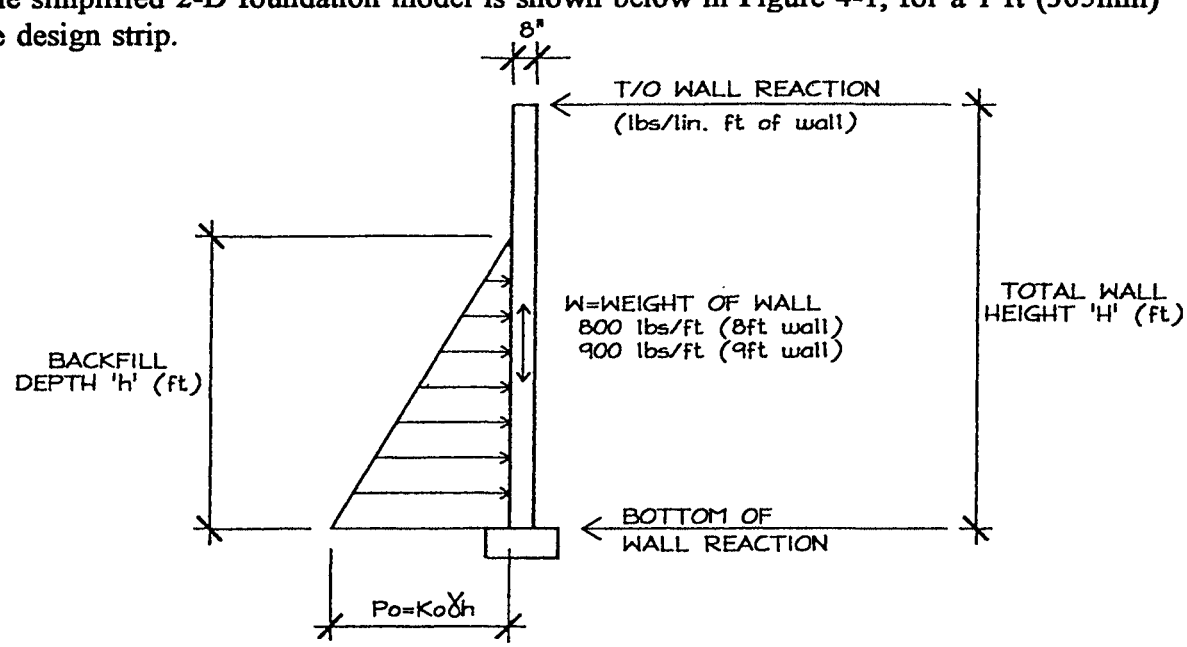

FIGURE 4-1 SIMPLIFIED FOUNDATION WALL MODEL (2-D)

4.3 Finite Element Model of Foundation (3-D)

In order to more realistically simulate the various foundation wall systems including the effects of beam pockets, short walls, walls adjacent to stairwell openings, and walls with large windows, a 3-D finite element model was created. The finite element model was created using STAAD III computer software, with a four-noded plate element. Two separate models were created; first an 8'-0" (2.4 m) high wall 30 ft (9.1 m) by 60 ft (18.3 m), and then a 9'-0" (2.74 m) high wall 30 ft by 60 ft long. Refer to Figure 4-2. Each model was created using 1' x 1' (305mm x 305mm) square plate elements with a thickness of 8" (203mm). Soil pressure distributions were the same as used for the simplified model, as were the backfill heights. Each model was analyzed with and without top of wall support to simulate both the laterally supported and the laterally unsupported conditions.

In addition to the basic straight wall models used in the study, support conditions were modified to emulate lateral support at discrete points (beam pockets), laterally unsupported sections of walls (stair openings) and removed segments of walls (window openings). To study the effects of short angled walls on the stability of foundation walls, a separate 3-D model was created with a 24" x 48" (.6m x 1.2m) jog in the wall.

For all cases, the STAAD III post-processor features were utilized extensively to help select the critical load conditions, and minimize the volume of recorded output. Only the relevant data from each configuration was recorded for use in the study, although all recorded and non-recorded results may be duplicated as required. One particularly useful tool STAAD III was able to provide was the plate stress contour feature which allowed a graphical interpretation of the wall behaviour. Typical plate stress contours were printed for each load case and support conditions, and these are included in the results of the study.

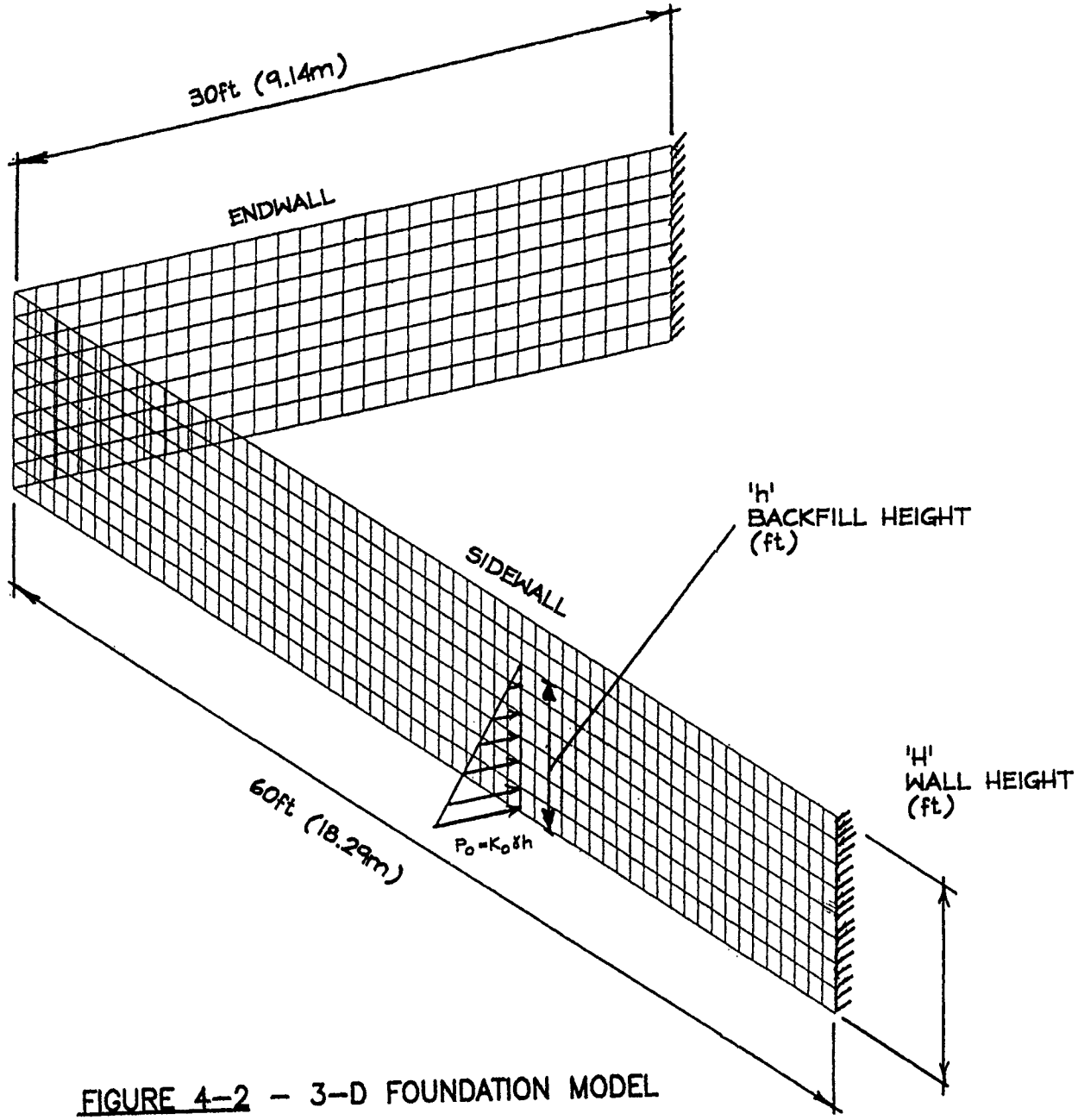

FIGURE 4–2 – 3–D FOUNDATION MODEL

Section 5
Study Objectives

5.1 Introduction

Once the lateral earth pressures had been clearly defined and the models created, it was necessary to revisit the overall study objectives. As previously defined during Phase I of the study, the overall focus was to include the following:

- Assess the capacity of the concrete wall to resist the lateral loads.
- Assess the adequacy of the ladder sill foundation wall connections to resist lateral loads.
- Assess various blocking and bracing options in conjunction with the ladder sill in generic terms:
    - Metal strapping detailed on page 50 of "Permanent Wood Foundations."
    - Blocking and bracing options detailed by wood I-joist manufacturers.
- Assess the role of beams in providing lateral support to walls.
- Assess the role of short angled walls in providing lateral stability to walls.

Each of these objectives were to be examined within the context of the following scenarios:

5.2 Straight Walls

Using the objectives previously defined above, the first phase of the study was to examine straight concrete foundation walls with the following design properties:

- Straight foundation wall with no openings.
- Maximum sidewall length of 60' (18.3m) and maximum endwall length of 30' (9.14m).
- Wall heights of 8'-0" (2.44 m) and 9'-0" (2.74 m).

The final output for this section was to provide the following answers:

- Limiting wall length for no bracing or blocking (laterally unsupported walls).
- Frequency and type of bracing and blocking required in a wall equal to or less than 60' (18.3 m) in length.

5.3 Beams and Angled Walls

The purpose of this section was to examine the role of beams and angled walls in providing lateral stability to foundation walls. Specifically, the following items were to be examined:

- The ability of a typically installed beam to resist the forces calculated, and provide lateral support to the foundation wall.
- The effect of beam pockets and beam pocket design.
- The effect of adding a 2' (600mm) long wall at 90 degrees and at 45 degrees to the main wall.

5.4 Stairwell Openings

Stairwell openings adjacent to exterior foundation walls may create areas of laterally unsupported foundation 8' (2.44m), 10' (3.04m), or 12' (3.65m) wide. The issues for investigation in this section were:

- Type of bracing or blocking required each side of stairwell locations.
- Additional reinforcement requirements for concrete walls adjacent to stairwell locations.

5.5 Large Window Openings

It is common practice to place one or two rough openings up to 56" (1.4m) wide in the foundation wall for windows. The issue for investigation in this section was to:

- Identify bracing and reinforcing details that would ensure the stability of the foundation wall under lateral earth pressure.

Section 6
Procedure

6.1 Introduction

To achieve the objectives of the study, each model was analyzed in turn subject to the lateral earth pressures defined in Section 1. Initially, the simplified model was used to establish a starting point and provide a feel for the forces involved in a typical foundation system. Once that stage was complete the 3-D models were analyzed using the same lateral earth pressures and backfill levels.

6.2 Simplified Foundation Model (2-D)

The simplified foundation model was used to calculate the required reactions and internal forces for a typical one foot (305mm) wide design strip of wall. A STAAD III 2-D beam element was utilized to perform the calculations for an 8'-0" (2.44m) high wall and a 9'-0" (2.74 m) high wall. Each wall was subjected to backfill pressures associated with the three basic soil types used in the study, as well as the code specified minimum backfill pressure. This resulted in four basic load conditions as listed below:

- Code specified minimum backfill pressure.
- Sand or sand and gravel or gravel backfill.
- Low plastic silt/clay backfill.
- High plastic clay backfill.

The 8'-0" (2.44m) high wall was analyzed using backfill heights of 4' (1.21m), 5' (1.52m), 6' (1.82m), 7' (2.13m), and 7½' (2.28m) with each of the four backfill pressures. Then the 9'-0" ((2.74m) high wall was analyzed using backfill heights of 4' (1.21m), 5' (1.52m), 6' (1.82m), 7' (2.13m), 8' (2.44m), and 8½' (2.59m) with each of the four backfill pressures. Results of each model are tabulated in Section 7 of the study. The governing factors for the model were the strength of the vertically unreinforced concrete wall itself and the top of wall reaction; therefore, the bending moment in the section and the top of wall reaction were recorded for each condition.

6.3 Finite Element Models (3-D)

As previously discussed in Section 4, 3-D finite element computer models were created to investigate each of the study objectives. The details of each model and the procedures used are outlined in the following sub-sections.

6.3.1 Straight Walls

To investigate the behaviour of straight walls the STAAD III models were first set up to simulate a laterally unsupported wall. Both the 8'-0" (2.44m) and 9'-0" (2.74m) walls were studied by simulating soil pressures corresponding to each of the four backfill pressures, at each of the design backfill depths. The critical wall stress location was identified using the STAAD III stress contour option (see Section 7) and then recorded for each analysis. Following each STAAD III run, the support locations were adjusted to decrease the maximum unsupported wall length by 5' (1.52m) intervals.

The procedure was repeated and the critical wall stress recorded for unsupported wall lengths from 60' (18.3m) down to 15' (4.57m) in 5' (1.52m) increments. Comparison of the critical wall stress with the nominal and design values provided a gauge of the adequacy of each wall in a laterally unsupported condition.

Once the unsupported condition had been recorded the STAAD III model was modified to simulate lateral support along the top of the wall. Again, both the 8'-0" (2.44m) and 9'-0" (2.74m) walls were studied by simulating soil pressures corresponding to each of the four backfill pressures, in each of the design backfill depths. Critical wall stresses were recorded for the 8'-0" (2.44m) wall (Table 7-5); however, the results indicated that wall behaviour was governed by vertical capacity identical to the simplified model results. Therefore, results of the 9'-0" (2.74m) wall were not duplicated. As well, top of wall reactions were also recorded and compared with the simple model results.

6.3.2 Beams and Angled Walls

To investigate the forces and behaviour associated with beams framing into beam pockets, the STAAD III model was modified to remove all lateral support from the endwall except a single reaction at the centre to simulate a beam pocket. For the 8'-0" (2.44m) wall, foundation behaviour was simulated by again applying soil pressures corresponding to each of the four backfill pressures, in each of the design backfill depths. The maximum wall stress, along with the horizontal beam pocket reaction were recorded for each of the load cases.

In order to simulate the behaviour of short jogs in the foundation wall, two separate 3-D STAAD III models were created. The new model simulated a wall 8' (2.44m) high by 60' (18.3m) long with a 24" (.6m) deep by 48" (1.2m) wide jog centred along the length (two variations). Backfill pressures were again applied, and the wall stress distribution and base reactions were monitored.

6.3.3 Stairwell Openings

To simulate the effect of placing stairwell openings adjacent to exterior foundation walls, the original STAAD III models were again modified. This time, as a starting point, the fully laterally supported model was used. Then, to simulate a stairwell, top of wall lateral support was removed from a portion of wall 8' (2.44m), 10' (3.04m) and 12' (3.65m) wide. The portion of wall was selected at mid-length of the 60' (18.3m) long sidewall for maximum effect, and once again subjected to pressures corresponding to each of the four backfill pressures, at each of the design backfill depths. Using the STAAD III plate stress contour option, the maximum wall stress was identified and recorded along with the required lateral support reaction each side of the unsupported length.

6.3.4 Large Window Openings

To investigate the effect of adding large openings in the foundation wall, two scenarios were simulated. The first scenario was a laterally unsupported wall condition. Here, the original laterally unsupported model was utilized and then modified to simulate a 60" (1.52m) wide by 24" (.6m) high window opening either at mid-span of the wall or adjacent to the endwall. This was accomplished by altering the plate element properties of the affected areas to simulate an opening. Stress contour results were then compared with the original wall stress contours and evaluated. After reviewing the effects of a window opening on a laterally unsupported wall, the same procedure was repeated for the laterally supported wall model.

Section 7
Analysis Results

7.1 Introduction

This section of the study contains the recorded results from the various analyses described in the previous section. Member forces and support reactions are typically recorded in tabular format while overall behaviour is described using grey-scale plots of the STAAD III generated plate stress contours. Such contours provided much invaluable insight into the overall behaviour of the foundation models subject to the different load configurations. The various results are summarized below:

7.2 Overview of Results

The results of each investigation are summarized as follows:

7.2.1 Simplified Foundation Model (2-D)

- Table 7-1 contains the results of the simplified model for an 8'-0" (2.44m) high wall, backfilled using each of the four backfill pressures, from 4' (1.21m) up to 7½' (2.28m) of backfill.

- Table 7-2 contains the results of the simplified model for a 9'-0" (2.74m) high wall, backfilled using each of the four backfill pressures, from 4' (1.21m) up to 8½' (2.59m) of backfill.

7.2.2 Straight Walls (3-D model)

1. Figure 7-1 shows a typical plate stress contour diagram of the foundation model in a laterally unsupported condition. It is apparent from the diagram that the wall spans primarily horizontally to the endwalls, although a vertical transfer of the load in the plate results in the highest stresses occurring at the tops of the corners as would intuitively be expected.

2. Table 7-3 contains the maximum wall bending stresses found in an 8'-0" (2.44m) high, laterally unsupported wall.

3. Table 7-4 contains the maximum wall bending stresses found in a 9'-0" (2.74m) high, laterally unsupported wall.

4. Figure 7-2 shows a typical plate stress contour diagram of the foundation model in a laterally supported condition. It is apparent from the diagram that in the presence of lateral support the wall plate spans vertically as per the simplified model theory. It is visible on the diagram, and can be shown that except for a small portion of wall, approximately "H" wide adjacent to endwall support, the foundation wall that is laterally supported at the top behaves in accordance with the simplified wall theory. This is in accordance with elastic theory which would predict that load will follow the stiffest load path, which in this case is to span vertically from the basement slab to the main floor.

5. Table 7-5 presents the maximum wall stress and top of wall reactions obtained from the 3-D STAAD III model of a laterally supported foundation system. As expected, the vertical strip of wall at midspan of the sidewall contains the maximum wall stresses and is virtually identical to the results obtained using the Simplified Foundation Model (2-D). Therefore results of the 9'-0" (2.74m) wall were not duplicated.

6. Figure 7-3 shows a typical plate stress contour diagram of the foundation wall model with a simulated beam pocket. The view shown is looking directly at the endwall of the model with a simulated beam pocket support at the top centre of the wall. The diagram illustrates the two-way plate action of the endwall, and shows the tendency of the wall below the pocket to span vertically as would be expected.

7. Table 7-6 contains the maximum induced wall stresses at the plate edge and also in the vertically spanning portion of wall under the beam pocket. Additionally, the lateral reaction of the beam pocket is shown. This chart was prepared using the results from a 30 ft wide endwall, representing the maximum width of foundation addressed in the study. Narrower endwalls result in proportionally more load being carried in a horizontal direction with less load absorbed by the beam pocket. Due to the inherent inability of a typical beam installation to provide the required reaction (see Section 8) results for other configurations are not presented in the results.

8. Figure 7-4 illustrates a typical plate stress contour of the foundation wall. The diagram illustrates the tendency of the jog to attract load provided that the support is capable of resisting the net overturning effect. The model shown is a wall 8' (2.44m) high by 60' (18.3m) long, laterally unsupported at the top, with a 24" (.6m) deep by 48" (1.2m) wide jog at midspan. Wall stresses at corners were very similar to those found at upper corners adjacent to endwalls.

9. Figure 7-5 shows a typical plate stress contour of a foundation wall with a 24" (.6m) jog at the centre. The model shown is a wall 8'-0" (2.44m) high by 60' (18.3m) long, laterally unsupported at the top, with a 24" (.6m) jog at midlength. From the diagram it is apparent that jogged walls do tend to act in a similar fashion to endwalls, provided that the base is anchored with enough capacity to resist the net overturning effect.

10. Figure 7-6 shows a typical plate stress contour of a foundation wall with a 12'-0" (3.66m) wide section that is laterally unsupported to simulate a stairwell opening. On the diagrams, the stress increase in the wall each side of laterally unsupported length is clearly visible.

11. Tables 7-7 and 7-8 present the maximum wall stress and reaction which must be resisted each side of typical stairwell openings 8'-0" (2.44m), 10'-0" (3.05m), and 12'-0" (3.66m) wide, under varying levels of backfill. Table 7-7 is for 8'-0" (2.44m) high walls and Table 7-8 is for 9'-0" (2.74m) high walls.

12. Figure 7-7 shows a typical plate stress contour of an 8'-0" (2.44m) high, laterally supported wall, with two 60" (1.52m) wide by 24" (.6m) high simulated window openings. One window is located 24" (.6m) from an endwall, while the other is located near mid-length of the wall. Evidence of the stress increase each side of the opening is apparent in the middle window, while the window adjacent to the endwall appears to have little effect on the wall stress profile.

13. Figure 7-8 shows a typical plate stress contour of an 8'-0" (2.44m) high, laterally unsupported wall, with two 60" (1.52m) wide by 24" (.6m) high simulated window openings. One window is located 24" (.6m) from the left endwall, and the other is located near midlength of the wall. Stress redistribution throughout the wall is evident; however, no stress increase was noted within the wall.

14. Table 7-9 presents the maximum wall stress in a laterally unsupported wall where the window is located near the endwall. No stress increase is noted when the values are compared with a wall without windows.

15. Table 7-10 presents the maximum wall stress in a laterally unsupported wall where the window is located near mid-length of the sidewall. No stress increase is observed when the values are compared with the same wall without windows.

Table 7-1
Results From Simplified 2-D Model (8'-0" [2.44m] wall)

Backfill Type	Backfill Height (ft)	Bending [1,2] Moment (lb ft)	Top of Wall Reaction (lbs)	Modified Top of [3] Wall Reaction (lbs)	
				Service	Factored
Code Minimum Backfill Pressure (γ_{eff} = 30 pcf)	4	202	40	7	20
	5	354	78	45	65
	6	540	135	102	134
	7	756	214	181	228
	7.5	879	264	231	288
Sand/Gravel Backfill Pressure (γ_{eff} = 57 pcf)	4	384	76	43	63
	5	673	148	115	149
	6	1026	256	223	279
	7	1436	407	373	460
	7.5	1669	500	467	571
Low Plastic Clay Backfill Pressure (γ_{eff} = 64 pcf)	4	431	85	52	74
	5	756	167	134	172
	6	1152	288	255	317
	7	1612	457	424	520
	7.5	1876	562	529	646
High Plastic Clay Backfill Pressure (γ_{eff} = 76 pcf)	4	512	101	68	93
	5	897	198	165	209
	6	1368	342	309	382
	7	1914	543	510	623
	7.5	2227	668	635	773

- - - - Values below dashed line exceed strength of wall with F.S. = 2.0 and should therefore be reinforced.

Notes:

1. The nominal bending moment capacity of an 8" (200mm) concrete wall without vertical reinforcement is 4150 lb-ft (5.63 kN-m).
2. The bending moment capacity of an 8" (200mm) concrete wall without vertical reinforcement, using a Factor of Safety equal to 2.0, is 2075 lb-ft (2.81 kN-m).
3. The modified top of wall reactions include the effects of wall self-weight in the analysis. Service values are nominal unfactored forces. Factored reaction includes load factors (see Section 3).

Table 7-2
Results From Simplified 2-D Model (9'-0" [2.74m] wall)

Backfill Type	Backfill Height (ft)	Bending[1,2] Moment (lb ft)	Top of Wall Reaction (lbs)	Modified Top of[3] Wall Reaction (lbs)	
				Service	Factored
Code Minimum Backfill Pressure (γ_{eff} = 30 pcf)	4	215	36	3	5
	5	377	69	36	54
	6	585	120	87	116
	7	833	190	157	200
	8	1114	284	251	312
	8.5	1272	341	308	381
Sand/Gravel Backfill Pressure (γ_{eff} = 57 pcf)	4	408	68	35	53
	5	716	132	99	130
	6	1112	228	195	245
	7	1582	362	329	406
	8	2116	540	507	620
	8.5	2420	649	616	750
Low Plastic Clay Backfill Pressure (γ_{eff} = 64 pcf)	4	458	76	43	63
	5	804	148	115	149
	6	1248	256	223	279
	7	1776	406	373	459
	8	2376	607	574	700
	8.5	2714	728	695	845
High Plastic Clay Backfill Pressure (γ_{eff} = 76 pcf)	4	544	90	57	80
	5	955	176	143	183
	6	1482	304	271	336
	7	2109	483	450	551
	8	2821	720	687	836
	8.5	3223	864	831	1008

- - - - Values below dashed line exceed strength of wall with F.S. = 2.0 and should therefore be reinforced.

Notes:

1. The nominal bending moment capacity of an 8" (200mm) concrete wall without vertical reinforcement is 4150 lb-ft (5.63 kN-m)
2. The bending moment capacity of an 8" (200mm) concrete wall without vertical reinforcement, using a Factor of Safety equal to 2.0, is 2075 lb-ft (2.81 kN-m).
3. The Modified Top of Wall reactions include the effects of wall self-weight in the analysis. Service values are nominal unfactored forces. Factored reaction includes load factors (see Section 3 for discussion).

Table 7-3
Maximum Wall Bending Stress (psi) in Laterally Unsupported Wall[4]
(8'-0" [2.44m] wall)

Backfill Type and Height	Unsupported Length (ft)									
	60	55	50	45	40	35	30	25	20	15
Code Minimum										
4	74	69	63	58	52	47	42	31	20	10
5	146	136	125	114	104	94	84	62	41	21
6	255	236	218	199	181	164	147	109	72	38
7	409	379	349	320	291	264	237	177	119	64
7.5	468	432	396	361	327	294	263	196	131	71
Sand/Gravel										
4	142	131	120	110	100	90	81	59	39	20
5	278	258	237	217	197	178	159	118	77	40
6	485	449	413	378	344	311	279	207	137	73
7	777	720	663	608	554	501	450	336	225	122
7.5	889	820	752	686	621	559	500	372	249	135
Low Plastic Clay										
4	159	147	135	123	112	101	90	67	43	22
5	312	289	266	243	221	199	179	132	87	45
6	543	503	463	424	386	349	313	233	154	81
7	871	809	745	683	621	561	505	377	252	137
7.5	997	922	845	770	698	627	561	417	279	152
High Plastic Clay										
4	189	174	160	147	133	120	107	79	52	26
5	371	343	316	289	262	237	212	157	103	53
6	645	598	550	504	458	414	372	276	183	97
7	1034	960	884	811	737	669	599	448	300	162
7.5	1184	1094	1003	915	828	745	666	496	332	180

Notes:

1. The nominal cracking stress of the concrete wall is 389psi (2.68MPa).
2. The maximum allowable stress in the concrete using a Factor of Safety equal to 2.0 is 195psi (1.34MPa). All values below the dashed line exceed this limit and would require additional reinforcing and/or top of wall lateral bracing.
3. Wall is assumed laterally unsupported at top.

Table 7-4
Maximum Wall Stress (psi) in Laterally Unsupported Wall[3]
(9'-0" [2.74m] wall)

Backfill Type	Unsupported Length (ft)									
	60	55	50	45	40	35	30	25	20	15
Code Minimum										
4	65	59	54	49	45	40	35	25	16	13
5	127	117	107	97	88	78	70	50	31	25
6	223	206	188	171	155	138	123	89	55	41
7	363	335	307	280	253	226	200	144	90	60
8	554	512	471	429	387	346	306	221	137	83
8.5	665	614	564	515	465	416	367	265	165	95
Sand/Gravel										
4	123	113	103	94	85	76	67	48	30	25
5	241	222	203	185	167	149	132	95	60	47
6	424	391	358	326	294	263	233	168	105	78
7	689	636	584	532	480	429	380	274	171	114
8	1054	974	894	815	736	658	582	419	261	157
8.5	1263	1167	1072	978	884	790	698	504	313	180
Low Plastic Clay										
4	137	127	116	105	95	85	75	54	33	28
5	270	249	228	207	187	167	148	107	67	53
6	475	438	401	365	330	295	262	189	118	87
7	773	714	655	596	538	481	426	307	191	128
8	1181	1091	1002	913	825	738	652	470	293	176
8.5	1416	1309	1202	1096	990	886	783	565	351	202
High Plastic Clay										
4	163	150	138	125	113	101	89	64	40	33
5	321	295	271	246	222	199	176	127	79	63
6	564	520	477	434	391	350	311	224	140	103
7	918	848	777	708	639	572	506	365	227	152
8	1403	1296	1190	1085	980	876	775	559	348	209
8.5	1681	1555	1428	1302	1176	1052	930	671	417	240

Notes:

1 The nominal cracking stress of the concrete wall is 389psi (2.68MPa).

2. The maximum allowable stress in the concrete using a Factor of Safety equal to 2.0 is 195psi (1.34MPa). All values below the dashed line exceed this limit and would require additional reinforcing and/or top of wall lateral bracing.

3. Wall is assumed laterally unsupported at top.

Table 7-5
Results From 3-D Finite Element Model of
Laterally Supported Wall (8'-0" [2.44m] wall)

Backfill Type	Backfill Height	Top of Wall[4] Reaction (lbs)	Maximum Wall [2] Wall Stress (psi)
Code Minimum			
	4	40	17
	5	78	31
	6	135	49
	7	214	69
	7.5	260	80
Sand/Gravel			
	4	76	32
	5	148	59
	6	257	93
	7	407	131
	7.5	495	151
Low Plastic Clay			
	4	85	35
	5	166	66
	6	288	104
	7	457	147
	7.5	555	169
High Plastic Clay			
	4	101	42
	5	198	78
	6	342	123
	7	542	175
	7.5	659	201

Notes:

1. Maximum recorded wall stress from finite element model. See plate stress contour (Figure 7-3) for element locations.
2. The maximum allowable bending stress in the concrete using a Factor of Safety equal to 2.0 is 195psi (1.34MPa). Therefore walls below the dashed line require reinforcement.
3. Reactions shown are nominal (unfactored) forces.
4. Values from this model correspond very closely to the results from the simplified model results, therefore values from the simplified model are used for design. Values for a 9'-0" (2.74m) wall were therefore not recorded.

Table 7-6
Results From Beam Pocket Support in Endwall
(8'-0" [2.44m] wall)

Backfill Type and Height	Wall Stress (psi)[1,2] Below Pocket	Wall Stress (psi)[1,2] at Corner	Beam Pocket Reaction (lbs) Service Load [3]
Code Minimum			
4	17	14	566
5	32	28	1109
6	52	47	1924
7	74	74	3069
7.5	81	82	3388
Sand/Gravel			
4	33	27	1075
5	62	53	2107
6	98	90	3655
7	141	141	5831
7.5	155	156	6437
Low Plastic Clay			
4	37	30	1205
5	69	59	2362
6	110	101	4098
7	158	158	6537
7.5	174	174	7216
High Plastic Clay			
4	44	36	1432
5	82	70	2805
6	131	120	4867
7	187	188	7764
7.5	206	207	8571

Notes:

1. Maximum recorded wall stress from finite element model. See plate stress contour (Figure 7-3) for element locations.
2. The maximum allowable bending stress in the concrete using a Factor of Safety equal to 2.0 is 195psi (1.34MPa). Therefore walls below the dashed line require reinforcement.
3. Reactions shown are nominal (unfactored) forces.
4. The large reactions recorded for this configuration were not considered to be practical to resist, given the beam pocket detailing required and the fact that residential floor beams are generally very close to capacity and would not accept additional axial load without designing each system. Therefore stresses and reactions for a 9'-0" (2.74m) wall were not produced.

Table 7-7
Results From Stairwell Openings Adjacent to Laterally Supported Wall
(8'-0" [2.44m] wall)

Backfill Type and Height (ft)	8 Feet Wide		10 Feet Wide		12 Feet Wide	
	Stress[1] (psi)	Reaction[2] (lbs)	Stress[1] (psi)	Reaction[2] (lbs)	Stress[1] (psi)	Reaction[2] (lbs)
Code Minimum						
4	17	249	17	326	17	407
5	31	485	32	635	32	795
6	50	839	50	1098	51	1374
7	70	1332	71	1744	73	2182
7.5	81	1618	82	2118	84	2649
Sand/Gravel						
4	32	472	32	618	33	774
5	60	922	60	1207	61	1511
6	94	1594	95	2086	97	2611
7	134	2531	136	3313	139	4146
7.5	154	3074	156	4024	160	5034
Low Plastic Clay						
4	36	529	36	693	37	867
5	67	1034	67	1354	69	1694
6	106	1787	107	2339	109	2927
7	150	2837	152	3714	156	4648
7.5	172	3446	175	4511	179	5643
High Plastic Clay						
4	43	629	43	823	44	1030
5	79	1228	80	1608	82	2012
6	125	2122	127	2778	130	3477
7	178	3370	181	4412	185	5520
7.5	205	4094	208	5358	213	6703

Notes:

1. The maximum allowable bending stress in the concrete wall using a Factor of Safety equal to 2.0 is 195psi (1.34MPa). Therefore walls below the dashed line require reinforcement.
2. The required lateral force each side of the unsupported length is recorded here.

Table 7-8
Results From Stairwell Openings Adjacent to Laterally Supported Wall
(9'-0" [2.74m] wall)

Backfill Type and Height (ft)	8 Feet Wide		10 Feet Wide		12 Feet Wide	
	Stress[1] (psi)	Reaction[2] (lbs)	Stress[1] (psi)	Reaction[2] (lbs)	Stress[1] (psi)	Reaction[2] (lbs)
Code Minimum						
4	18	222	15	290	16	365
5	34	433	30	567	30	712
6	54	752	50	982	51	1244
7	79	1201	77	1563	78	2008
8	106	1798	107	2337	109	3034
8.5	120	2137	123	2776	125	3617
Sand/Gravel						
4	35	421	29	552	30	693
5	64	822	58	1078	57	1353
6	103	1428	97	1866	97	2364
7	150	2282	150	2970	148	3815
8	202	3417	208	4440	207	5764
8.5	229	4061	239	5274	237	6872
Low Plastic Clay						
4	39	472	32	619	33	777
5	72	922	64	1208	64	1517
6	116	1601	107	2092	109	2650
7	169	2558	165	3330	166	4277
8	227	3831	229	4977	232	6462
8.5	257	4552	263	5913	266	7703
High Plastic Clay						
4	46	561	38	735	39	922
5	86	1095	76	1435	76	1801
6	138	1901	127	2484	130	3147
7	200	3038	196	3955	198	5080
8	269	4550	272	5912	275	7676
8.5	305	5407	310	7023	316	9150

Notes:

1. The maximum allowable bending stress in the concrete wall using a Factor of Safety equal to 2.0 is 195psi (1.34MPa). Therefore walls below the dashed line require reinforcement.
2. The required lateral force each side of the unsupported length is recorded here.

Maximum Wall Stress (psi) in Laterally Unsupported Wall

Table 7-9
With Window Near Endwall
(8'-0" [2.44m] wall)

Backfill Type	Backfill Height	Unsupported Length (ft)	
		60	30
Code Minimum	4	65	37
	5	128	73
	6	222	127
	7	353	202
	7.5	404	223
Sand/ Gravel	4	124	71
	5	244	139
	6	422	241
	7	671	383
	7.5	768	424
Low Plastic Clay	4	139	79
	5	273	156
	6	473	270
	7	753	429
	7.5	861	475
High Plastic Clay	4	166	94
	5	324	185
	6	562	321
	7	894	510
	7.5	1022	564

Table 7-10
With Window Near Mid-length
(8'-0" [2.44m] wall)

Backfill Type	Backfill Height	Unsupported Length (ft)	
		60	30
Code Minimum	4	74	43
	5	146	84
	6	254	147
	7	408	238
	7.5	466	264
Sand/ Gravel	4	142	81
	5	277	160
	6	483	280
	7	774	451
	7.5	886	501
Low Plastic Clay	4	158	91
	5	311	179
	6	542	314
	7	868	506
	7.5	993	562
High Plastic Clay	4	188	108
	5	369	213
	6	643	373
	7	1031	601
	7.5	1180	667

- - - - Values below dashed line exceed strength of wall with F.S. = 2.0 and should therefore be reinforced.

1. The nominal cracking stress of the concrete wall is 389psi (2.68MPa).
2. The maximum allowable stress in the concrete using a Factor of Safety equal to 2.0 is 195psi (1.34MPa). All values below the dashed line exceed this limit and would require additional reinforcing and/or lateral bracing.
3. Values of wall stress are only shown for 60 ft and 30 ft unsupported wall lengths since it was observed that these stresses are not higher than those for walls without windows (Table 7-3). Therefore window openings at mid-length appear to have no negative effect on a laterally unsupported wall.
4. Values were not reproduced for a 9'-0" (2.74m) wall although results were similar.

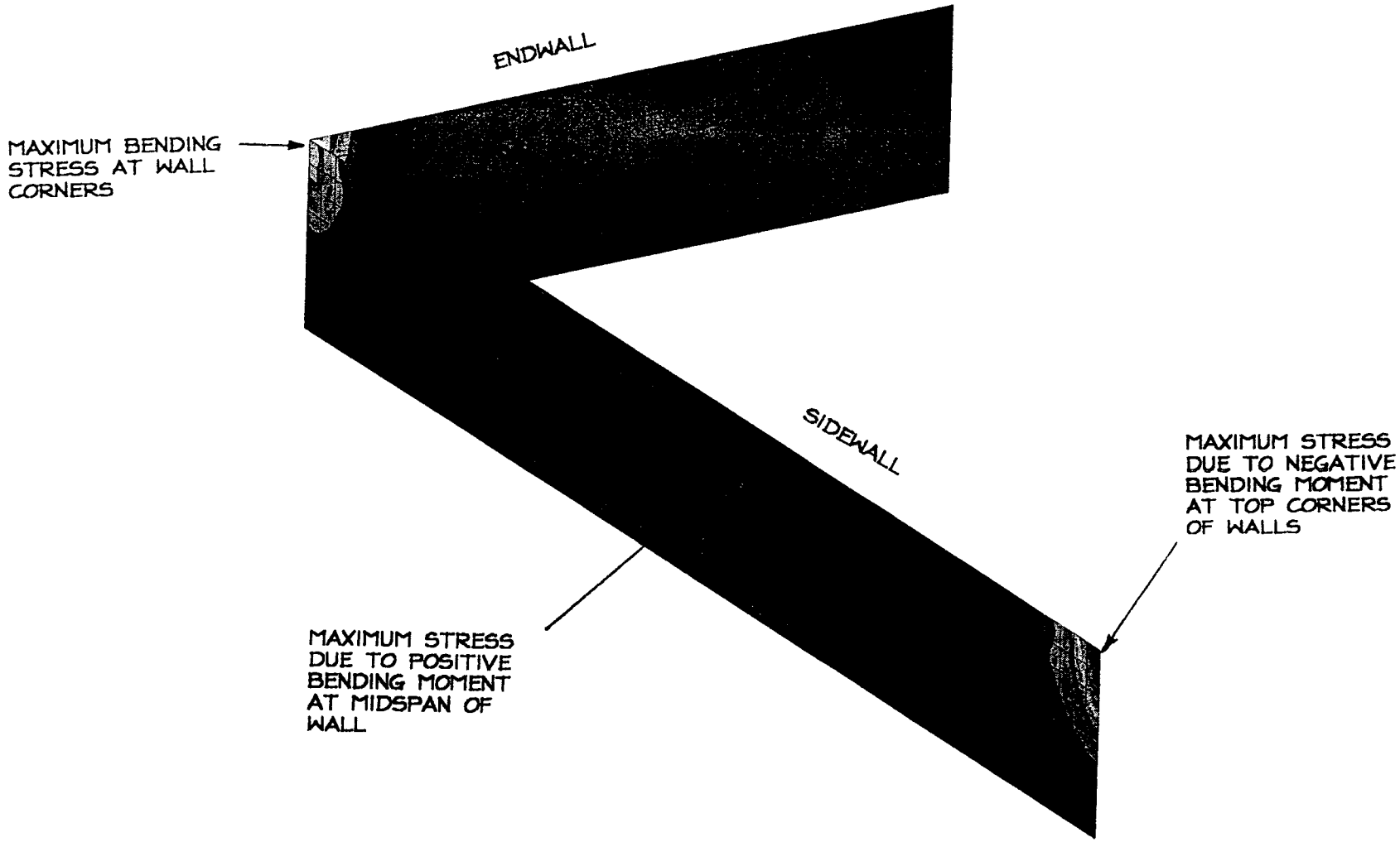

FIGURE 7-1 – PLATE STRESS CONTOUR DIAGRAM OF LATERALLY UNSUPPORTED FOUNDATION WALL

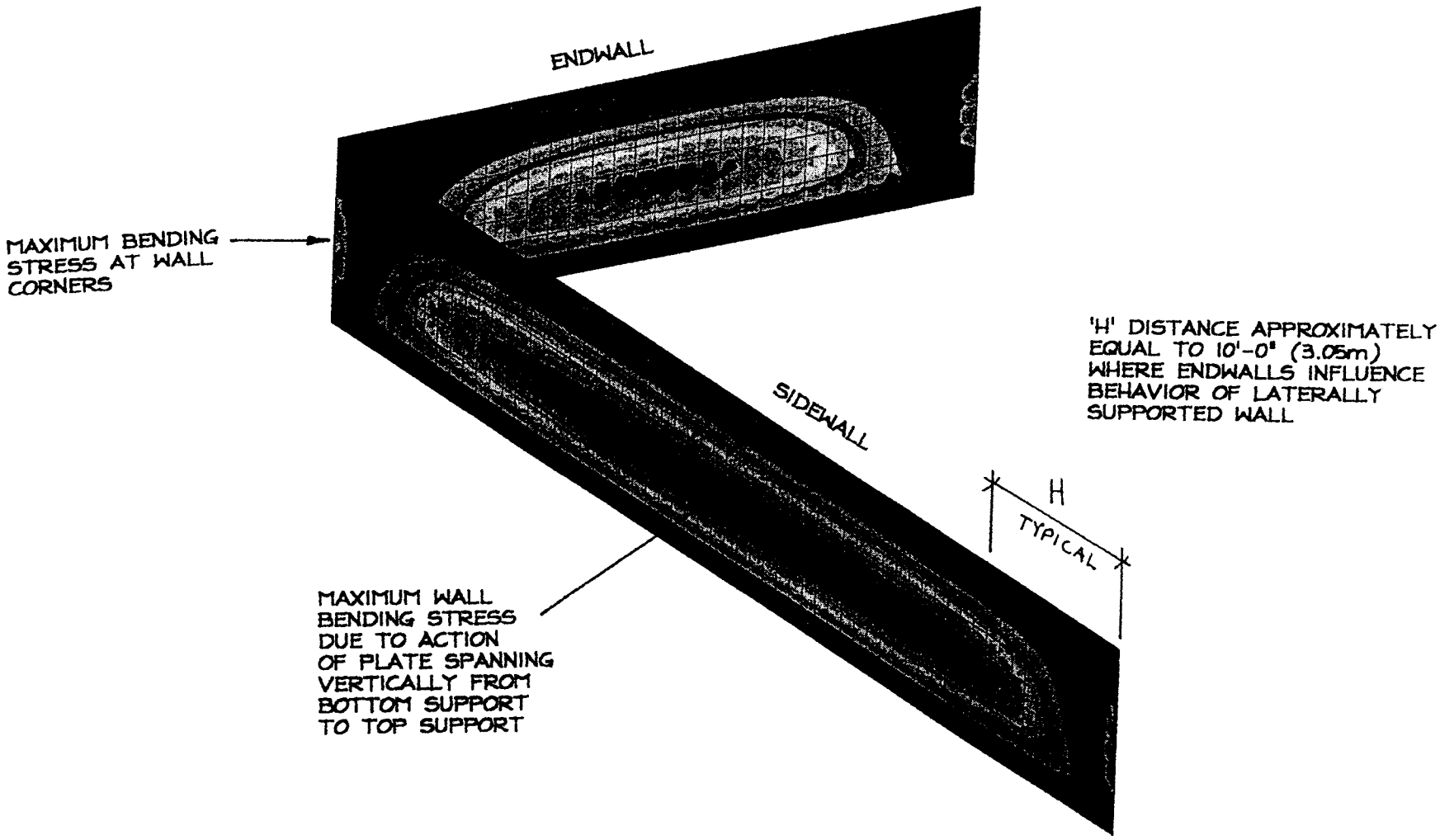

FIGURE 7–2 – PLATE STRESS CONTOUR DIAGRAM OF LATERALLY SUPPORTED FOUNDATION WALL

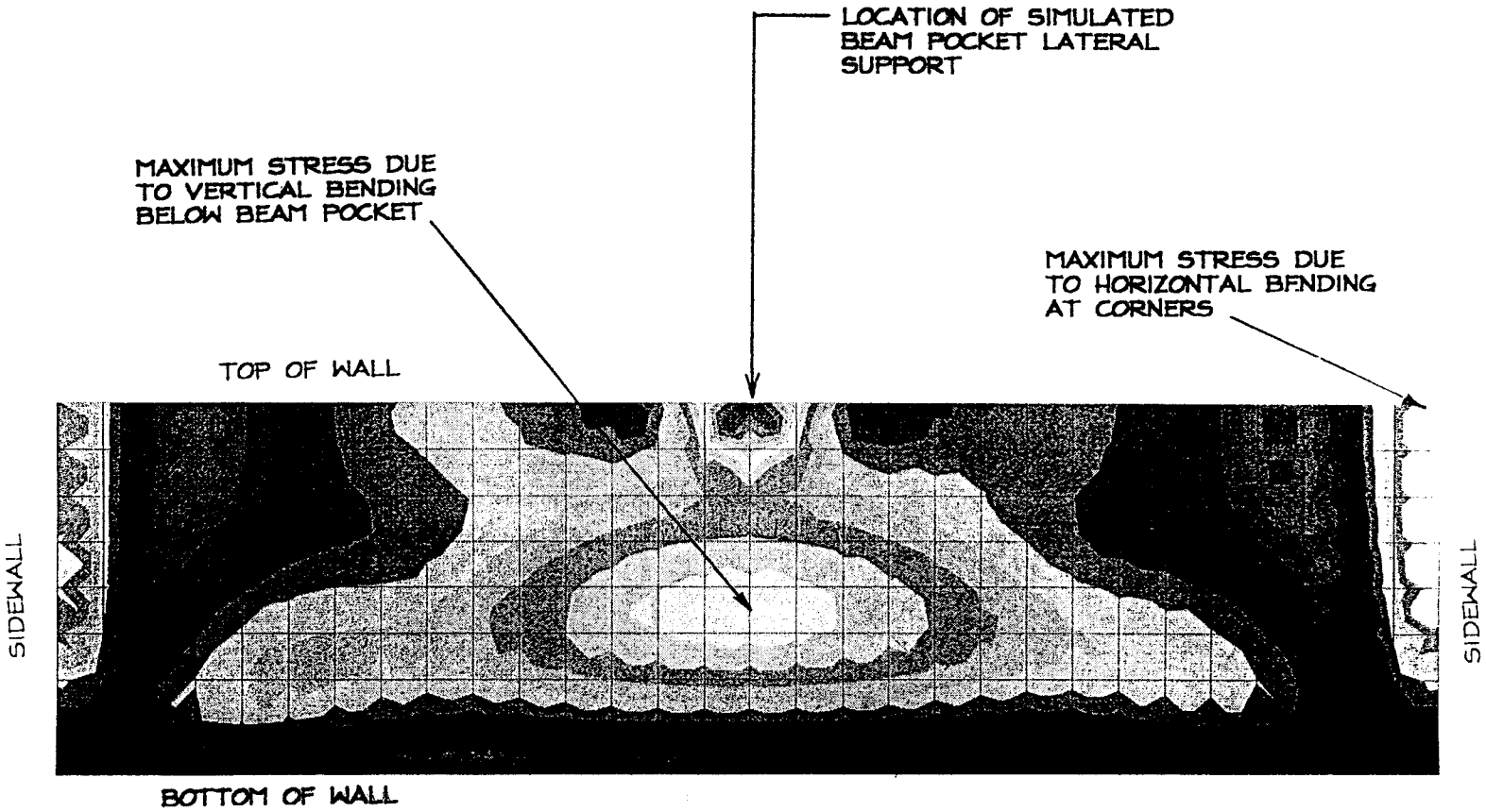

FIGURE 7-3 – PLATE STRESS CONTOUR DIAGRAM OF SIMULATED BEAM POCKET IN ENDWALL

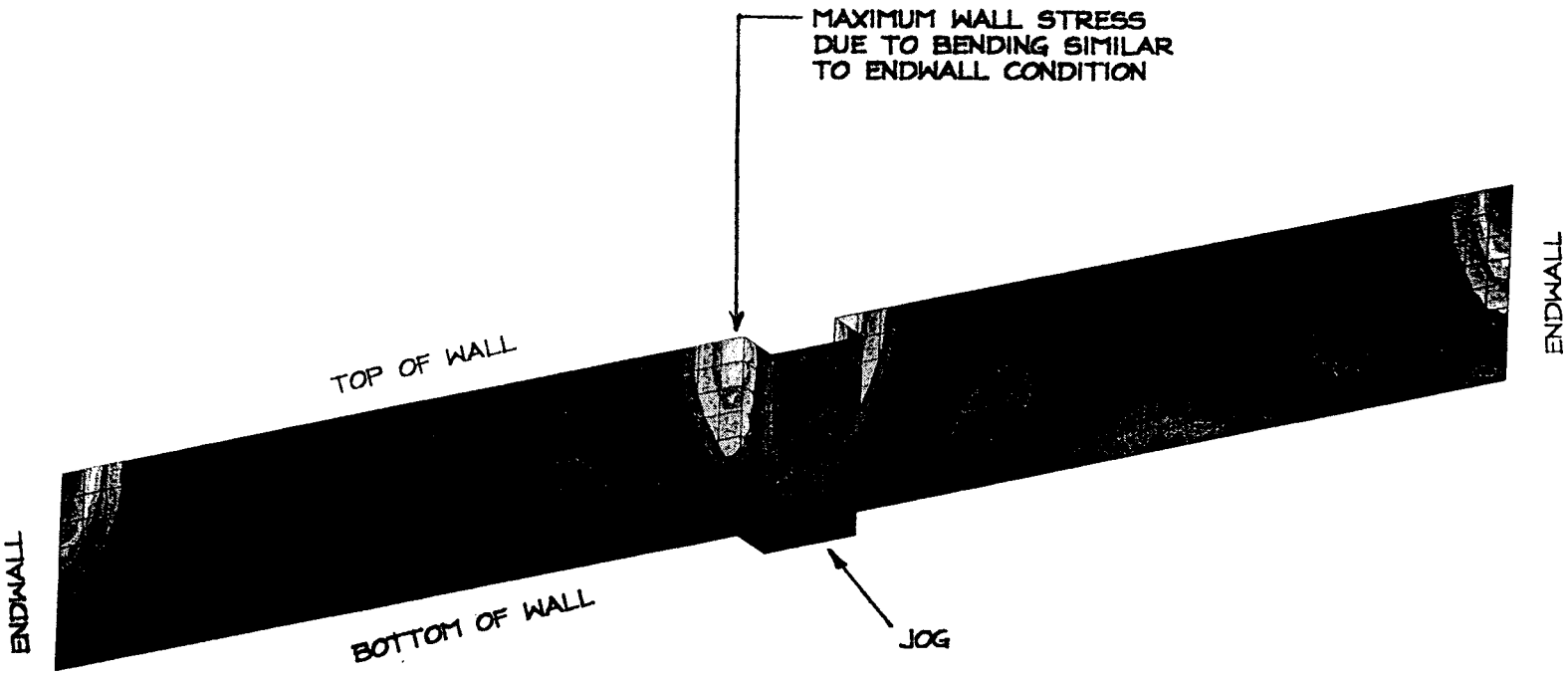

FIGURE 7-4 – PLATE STRESS CONTOUR DIAGRAM OF SIMULATED 24"x48" (610x1200) JOG IN FOUNDATION WALL

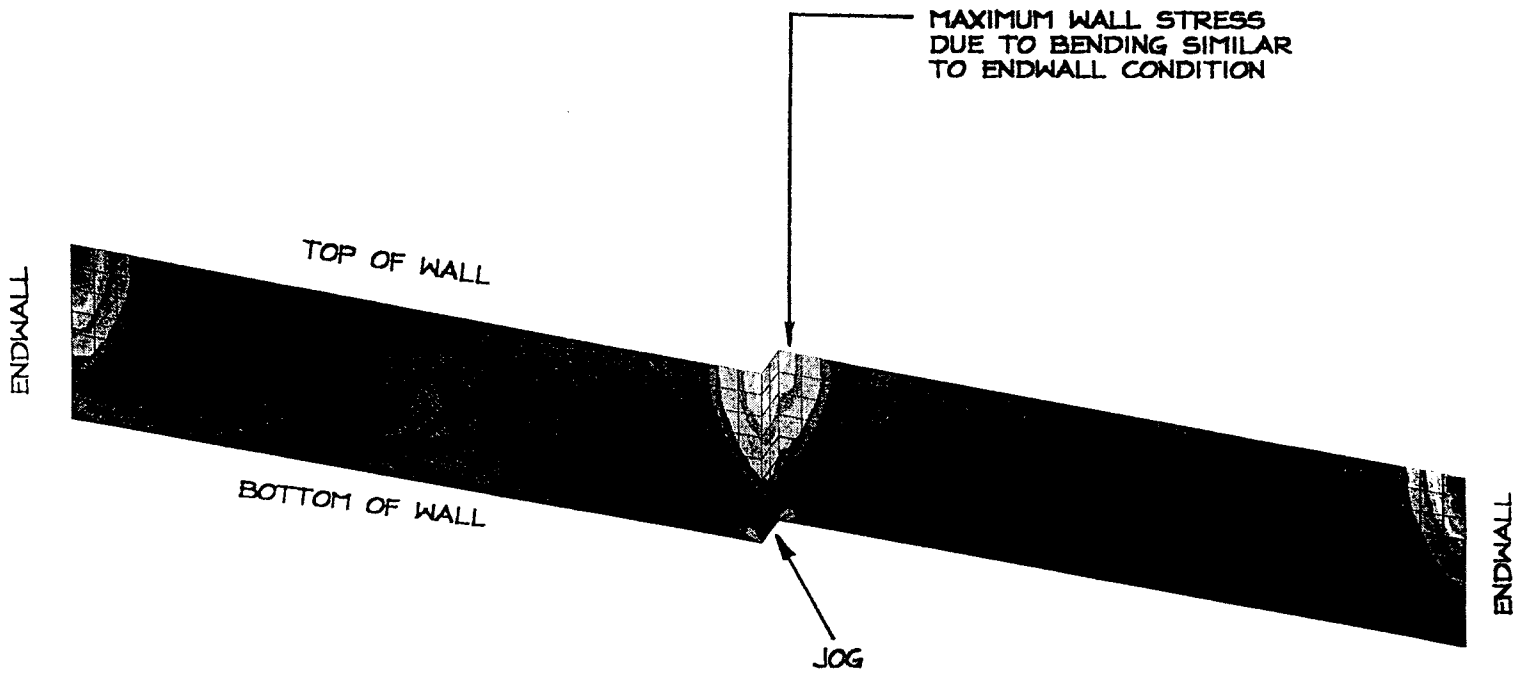

FIGURE 7-5 – PLATE STRESS CONTOUR DIAGRAM OF SIMULATED 24" (610mm) JOG IN FOUNDATION WALL

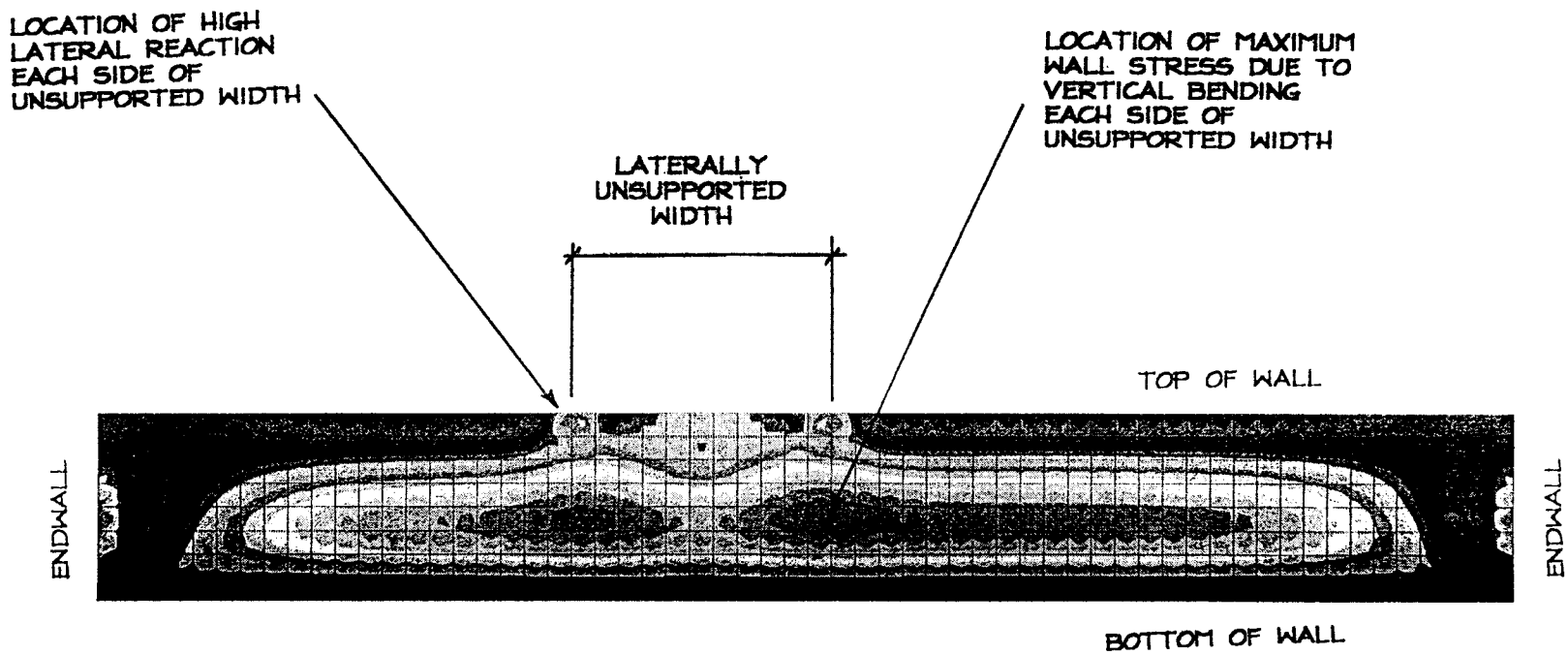

FIGURE 7-6 – PLATE STRESS CONTOUR DIAGRAM OF LATERALLY SUPPORTED FOUNDATION WALL WITH SIMULATED STAIRWELL OPENING

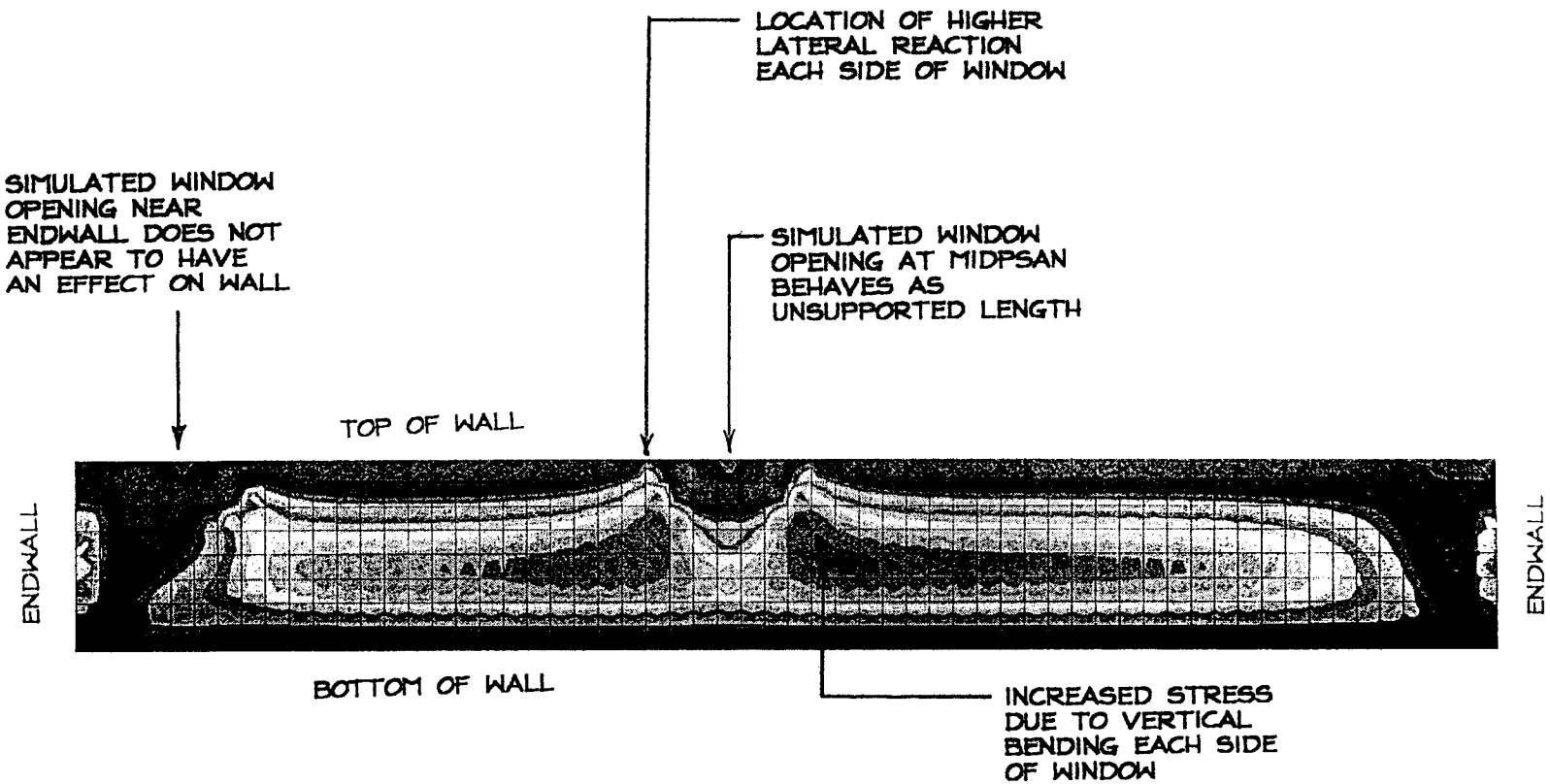

FIGURE 7-7 – PLATE STRESS CONTOUR DIAGRAM OF SIMULATED WINDOW OPENINGS IN LATERALLY SUPPORTED FOUNDATION WALL

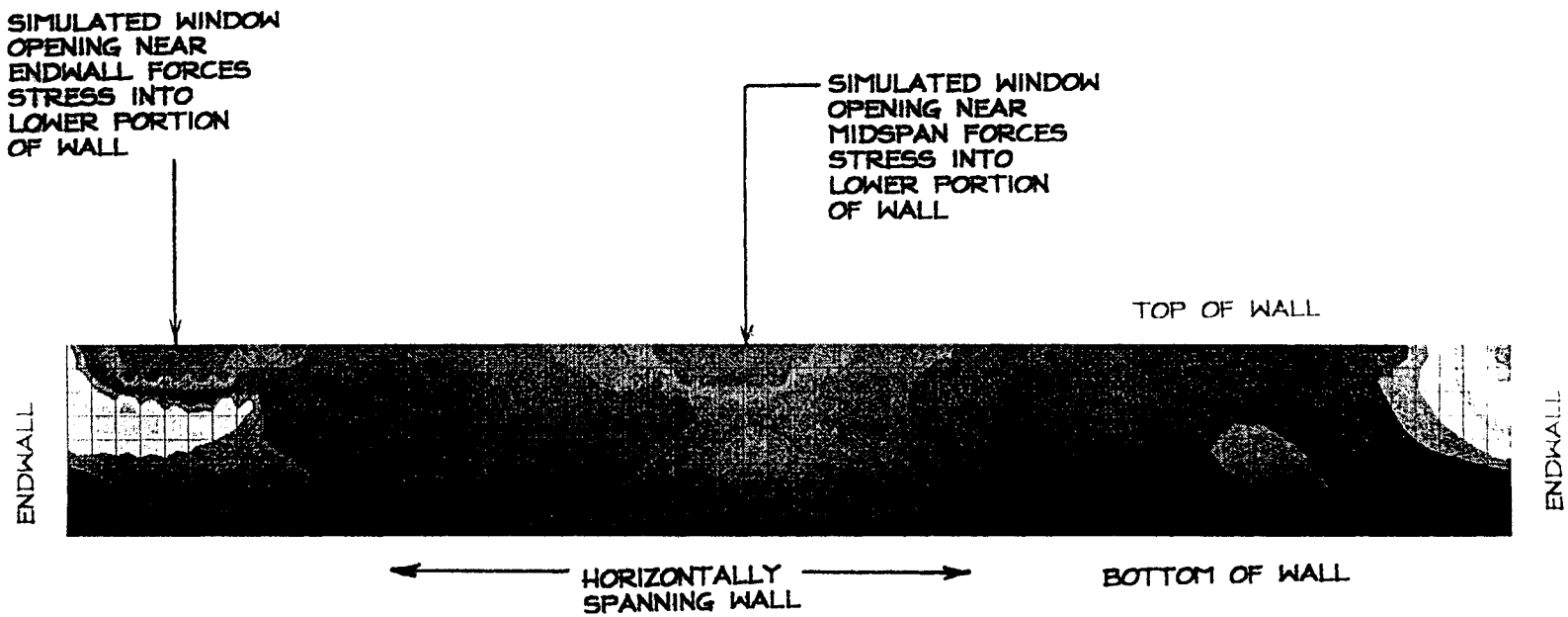

FIGURE 7-8 – PLATE STRESS CONTOUR DIAGRAM OF LATERALLY UNSUPPORTED FOUNDATION WALL WITH SIMULATED WINDOW OPENINGS

Section 8
Conclusions

8.1 Introduction

By observing the various computer models under simulated lateral earth pressures, many valuable insights were made. Traditionally a 2-D design approach has been used and the inherent capacity of unreinforced concrete has been neglected. The 3-D finite element model was useful in observing the flexural behaviour of the walls in a more realistic manor. It was especially useful in defining the boundary limits of validity for the 2-D simplified model. This section discusses some of the insights gained into the behaviour and design of residential concrete foundation walls.

8.2 Straight Walls

The following sub-sections outline the insights into the behaviour of concrete foundation walls:

8.2.1 Simplified Model (2-D)

Based on the results of generalized 3-D model, it is clear that away from the effects of endwalls which extend approximately 10' (3.04m) from corners, the simplified model represents the behaviour of a laterally supported wall very closely. In fact, at distances beyond the disturbed region adjacent to the endwalls, the simplified model results match the generalized model, as would be expected.

Depending on the type of backfill used for the wall, analysis of the lateral loading revealed that an uncracked 8" (203mm) concrete wall constructed as per the assumptions outlined in section 2, does possess sufficient nominal strength to resist all backfill pressures up to 8'-6" (2.59m) on a 9'-0" (2.74m) wall. However, with a Factor of Safety of 2.0 as discussed in Section 3, vertically unreinforced walls would appear to be adequate for the following conditions:

Table 8-1
Maximum Backfill Heights
(Assuming Laterally Supported Top of Wall)

Wall Height	Backfill Type	Maximum Backfill Height (Vertically Unreinforced with F.S. = 2.0)
8'-0" (2.44m)	Code Specified Minimum	7'-6" (2.28m)
	Sand/Gravel Backfill	7'-6" (2.28m)
	Low Plastic Clay Backfill	7'-6" (2.28m)
	High Plastic Clay Backfill	7'-0" (2.13m)
9'-0" (2.74m)	Code Specified Minimum	8'-6" (2.59m)
	Sand/Gravel Backfill	8'-0" (2.44m)
	Low Plastic Silt/Clay	7'-6" (2.28m)
	High Plastic Clay	7'-0" (2.13m)

The main drawback associated with basing a design on uncracked concrete is that shrinkage cracking from curing concrete usually occurs. However, past performance of foundation walls has generally indicated that the majority of installations perform adequately without vertical reinforcing. It is important to point out that vertical reinforcing may be necessary for 9'-0" (2.74m) walls particularly under high backfills where historically, 8'-0" (2.44m) walls would not have required vertical reinforcement for full backfills. Design and detail of reinforcement for the walls will be discussed in the design section (Section 9), and Appendix B.

Besides the wall strength, the strength of the lateral connection from the top of wall to the floor system requires attention. With the simplified model, lateral support is required on all sides of the foundation, and therefore blocking is required on the endwalls. In typical residential construction, blocking is not provided to the endwalls; however, for proper load transfer it should be provided. The required reaction at the top of wall requires some attention as well. Historically, toe-nailing of the joists to the box sill has been the only lateral connection provided with concrete foundation walls. The minimum required nailing of floor joists to plate specified by the ABC 97 is 2- 82mm (3 1/4") nails. The capacity of a:

3" toenail in SPF material: $N_r = \phi n_u n_{se} K^1 J^1 = 0.600\ (1.0)\ (0.65)\ (0.83)$
$= 0.323$ kN/nail (73 lbs/nail)

3 1/2" toenail in SPF material: $N_r = 0.720\ (1.0)\ (0.65)\ (0.83)$
$= 0.388$ kN/nail (87 lbs/nail)

Therefore, for the purposes of this study, the standard box sill lateral capacity is limited to 2 x 73 lbs = <u>146 lbs</u> per joist location.

Code specified minimum backfill pressure of 7'-6" (2.28m) on an 8'-0" (2.44m) wall results in a factored top of wall reaction: $P_f = 1.2\ (264\ \text{lbs}) = 317$ lbs/lin ft of wall.

Therefore, with a typical joist spacing of 16" (406.4mm) the reaction would be $P_f = 423$ lbs (1.88 kN) would require 6 - 3" (76mm) toenails or 5 - 3½" (89mm) toenails. This amount of toenailing is not physically possible into a box sill connection, not to mention that only the interior plate of the box sill is effective in resisting lateral earth pressure. Therefore it would appear that toenailing is **not** an effective method for providing lateral support to the top of foundation walls, except for very low backfill levels, and that Part 9 of the Alberta Building Code is inconsistent in specifying a connection that will not be capable of resisting even the minimum specified earth pressure. From this evidence, it is apparent that where lateral support is required, toenailing is not an adequate option except for very low levels of backfill; more practical alternatives are designed and detailed in Section 9. Incidentally, a bolted sill plate anchored using ½" (13mm) diameter anchor bolts at 8'-0" (2.44m) on centre could be considered to provide an equivalent lateral support of

$$W_r = \frac{0.65\ (2.26\ \text{kN})}{2.4\ \text{m}} = 0.612\ \text{kN/m}\ (42\ \text{plf})$$

and therefore provides even less resistance and should not be considered a top of wall lateral support.

8.2.2 3-D Finite Element Model

From the simplified model it is apparent that for foundation walls to be considered laterally supported, a properly designed top of wall connection is required. Since the results of the 3-D model closely agree with the results from the 2-D model for laterally supported walls, the main question was whether or not lateral support was required for foundation walls. From Tables 7-3 and 7-4, it is found that the maximum unsupported wall lengths which do not require vertical reinforcing are as shown in Table 8-2.

Table 8-2 Maximum Unsupported Wall Lengths (feet)

Wall Height	Backfill Height (feet)	Backfill Type							
		Code Minimum		Sand/Gravel		Low Plastic Clay/Silt		High Plastic Clay	
		FS: 1.0	2.0	FS: 1.0	2.0	FS:1.0	2.0	FS: 1.0	2.0
8 feet (2.44 m)	4	60	60	60	60	60	60	60	60
	5	60	60	60	40	60	35	60	28
	6	60	45	47	23	40	23	32	21
	7	56	26	27	18	26	17	23	16
	7.5	49	25	26	17	23	16	22	16
9 feet (2.74 m)	4	60	60	60	60	60	60	60	60
	5	60	60	60	47	60	43	60	35
	6	60	52	55	28	47	25	40	23
	7	60	28	30	22	28	20	26	18
	8	40	23	23	17	23	16	21	<15
	8.5	31	21	22	16	21	<15	18	<15

• All values are approximate and based on cracking strength of unreinforced concrete foundation system.

The results from Table 8-2 tend to indicate that concrete foundation walls do indeed possess a fairly high nominal strength, particularly when subjected to relatively light lateral earth pressures. This is a fact that many foundation contractors have long known. The plate action of continuous walls does indeed provide resistance to lateral earth pressures without top of wall lateral support, and this is consistent with many field observations; however, to achieve a reasonable Factor of Safety against long term failure most of the required unsupported wall lengths are too short to be practical. Therefore from this exercise, it is clear, that to achieve a reasonable Factor of Safety without going to more complex foundation reinforcement schemes, top of wall lateral support should be provided. Lateral support may come in the form of proper joist attachment along the sidewalls and proper blocking or bracing along the endwalls. One thing that should be emphasized at this point is that this lateral support is for long term stability. Generally speaking, when backfill is placed for residential foundations it is not compacted to 95% of Standard Proctor. Therefore the design soil pressures are likely quite conservative during *the initial portion* of the structure's lifespan; however, as the soil consolidates and densifies with time the lateral support will become a key component in the overall system.

8.3 Beams and Angled Walls

Using the generalized 3-D element model the role of using beams and short angled walls to provide lateral stability was examined. Here the stress contour diagrams provided a clear representation of the wall behaviour.

8.3.1 Beams

In residential construction beams are commonly provided to reduce the spans of the floor joists and typically run parallel to the foundation sidewalls and may be supported in the endwalls. This study examined the feasibility of using these floor beams to provide lateral stability to foundation endwalls. Figure 7-3 provides a clear depiction of the structural behaviour of the wall under backfill loading. Table 7-6 then shows the maximum wall stress for each load case and the required horizontal beam pocket reaction. Based on the wall stress contours it appears that using the beam pocket as a lateral support would provide a Factor of Safety equal to 2.0. There are two basic problems associated with using the beam pocket as a lateral support. First, since the reaction under full backfill ranges from a minimum of 3388 pounds (15.1 kN) to a maximum of 8571 pounds (38.1 kN), a special connection would be required. As well, a typical residential floor beam would require design for combination vertical and horizontal (axial) loads which is not normally done and not economically viable. As well, this system relies on the horizontal spanning ability of the wall which is less reliable given the likelihood of vertical shrinkage cracks which would compromise the system. Therefore beams appeared to be impractical to use as lateral supports.

8.3.2 Angled Walls

From Figures 7-4, 7-5 and the associated model stresses, it is apparent that short jogs in the foundation do tend to act as endwalls if they are not allowed to move. Upon close examination of the base reactions required to stabilize the jog, it becomes clear that it is impractical to anchor such walls from movement. The overturning moments associated with this configuration are quite substantial and would require special anchorage details. Therefore it is our conclusion that although at first glance the walls appear to help stabilize the wall, it is impractical to design them to resist the imposed lateral loads.

8.4 Stairwell Openings

Using the STAAD III model the wall stresses and required blocking were examined around simulated stairwell openings. Refer to Figure 7-6, Table 7-7, and Table 7-8. It is evident from the data that additional wall reinforcement is not required for 8'-0" (2.44m) walls except in high backfills. This would maintain a minimum Factor of Safety of 2.0 on the wall bending stress. For 9'-0" (2.74m) walls all backfill types except code minimum would require additional reinforcing for high backfill. In all cases, substantial blocking reactions and connections are required each side of stair openings in laterally supported walls. Design and detailing of these blocking points are covered in Section 9 and because forces around stairwell openings rely heavily on the horizontal spanning ability of the wall and this mechanism is susceptible to cracking, we suggest minimum reinforcement (see Section 10).

8.5 Window Openings

Window openings had a different effect on the foundation wall stress depending on whether or not the foundation was laterally supported along the top.

8.5.1 Laterally Unsupported Walls

The effect of window openings in laterally unsupported walls was to shift the stress lower in the wall below the opening. This is due to the fact that wall spans horizontally from endwall to endwall and therefore does not notice loss of vertical support at the top of wall. The shift in stress is apparent on the stress contour diagram compared with the original wall contour diagram, however no increase in stress was noted.

8.5.2 Laterally Supported Walls

Window openings in laterally supported walls tend to act very much like stairwell regions in that load is transferred by horizontal plate action of the wall directly under the window to the vertically spanning wall each side of the opening. Again, local reinforcement will be required under certain backfill conditions as some of the higher stress regions could be subject to cracking.

In both situations it is recommended that some form of minimum reinforcement be provided around window openings because of the inevitable shrinkage cracks that appear around these higher stress locations. Recommendations for this minimum reinforcement are provided in Section 10.

Section 9
Design Solutions

9.1 Introduction

Several of the situations encountered in the analysis phase of this study required additional design input to adequately resist the lateral earth pressures. The purpose of this section is to design and detail practical, cost effective solutions to those situations. Two basic design situations were encountered. In the first situation, proper lateral bracing was required to resist the top of wall movement. In the second situation, additional reinforcement was required in the wall to resist the lateral earth pressures with an adequate Factor of Safety. Each of these situations is addressed in turn.

9.2 Lateral Bracing

As previously pointed out in Section 8, toe-nailing or using anchor bolts does not provide the required lateral support to restrain the top of wall in a laterally supported condition except under low backfill conditions. In particular, details which rely on nailing to the exterior ladder are completely ineffective as the exterior ladder plate will tear off without supporting the wall. Also, diagonal bracing is not recommended because it will induce a concentrated load at the top of the joist and not properly transfer the load into the floor diaphragm. The preferred detail for lateral load transfer is one similar to that commonly used for Preserved (Permanent) Wood Foundation (PWF) construction. This involves the use of a galvanized steel framing strap, as shown in Figure 9-1. Typically these straps are specified as the preferred detail for

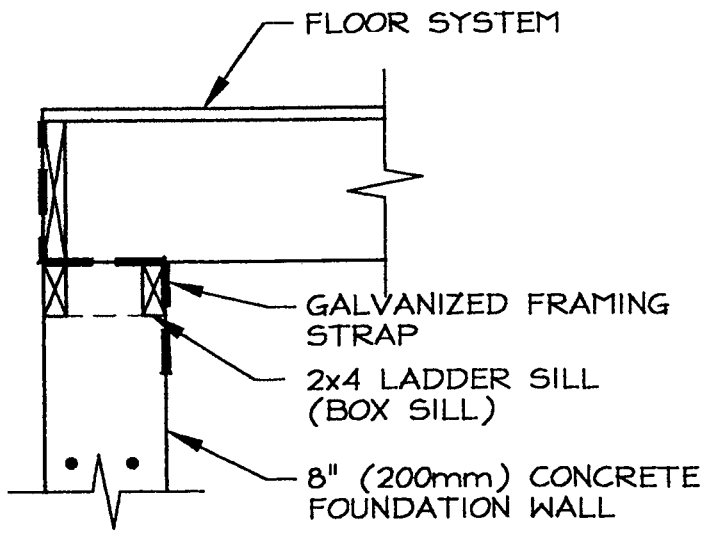

FIGURE 9-1 – FRAMING STRAP DETAIL

backfills over 5'-0" (1.52m) in PWF construction. These straps are easy to install and inexpensive, as well as being capable of transferring high loads. Galvanized strap ties 1.25" (32mm) wide by 20ga (0.912mm) and up are readily available in various lengths or coiled stock from connector suppliers such as MGA Connectors and Simpson Strong-Tie. Therefore, this is the recommended top of foundation connection that will be designed and detailed for this study. Calculations covering the design details of tension straps are covered in Appendix A. As calculated, the framing straps are effective at providing the required lateral support for commonly constructed floor systems.

9.3 Concrete Wall Strength

Vertically unreinforced concrete walls have historically performed well for most residential applications. Therefore it is evident that the concrete strength alone is capable of resisting backfill pressures to some degree. Indeed a comparison between the calculated concrete capacity and the bending due to earth pressures has shown that for many backfill heights a Factor of Safety of 2.0 is achievable without vertical reinforcing; however with the fairly recent advent of 9'-0" (2.74m) residential foundation walls, the inherent Factor of Safety has been reduced substantially. Compared to the 8'-0" (2.44m) wall fully backfilled with the same type of material, the 9'-0" high wall bending stress is **45%** higher. This is a very substantial increase and warrants some attention.

Clause 14.3 of CSA A23.3-94 "Design of Concrete Structures" specifies that a minimum area of reinforcing steel shall be provided in all concrete walls as follows:

minimum vertical ≥ 0.0015 Ag
minimum horizontal ≥ 0.0020 Ag

As well, that clause specifies that the reinforcement shall not be spaced more than three times the wall thickness or 500mm maximum apart. Also openings shall have *not less than* two No. 15 bars around the opening extending at least 600mm beyond each corner of the opening.

The minimum reinforcement in an 8" (200mm) thick wall would be as follows:

vertical $A_{min} = 300mm^2/m$
$\rightarrow$ 10M @ 12" o/c = $333mm^2/m$
or $\rightarrow$ 15M @ 24" o/c = $333mm^2/m$

horizontal $A_{min} = 400mm^2/m$
$\rightarrow$ 10M @ 10" o/c = $400mm^2/m$
or $\rightarrow$ 15M @ 20" o/c = $400mm^2/m$

The bending capacities of these minimally reinforced sections are shown in Appendix B. As shown, the factored bending capacity of a minimally reinforced wall is actually less than the factored cracking moment of the unreinforced concrete. Therefore no strength increase is realized by reinforcing the wall with this minimum steel; however, the steel can be relied upon if a temperature or shrinkage crack compromises the integrity of the wall. This minimum reinforcement would be adequate to provide bending resistance for all types of

backfill up to 8'-6" (2.44m) on an 8" x 9'-0" (203mm x 2.74m) wall, provided the bars are placed 1.5" (40mm) from the inside face of the wall. Reinforcement should be placed at this location for maximum effectiveness.

For regions adjacent to windows and stairwell openings adding two 15M verticals spaced at 12" (305mm) on centre provides the additional reliability. Around windows two 15M horizontals spaced at 6" (152.4mm) on centre starting 2" (50.8mm) below the opening and extending a minimum of 24" (600mm) beyond the opening each side would be reasonable. These horizontals would be in addition to the two 15M verticals each side of the opening.

Section 10
Recommendations

10.1 Introduction

Residential concrete foundation walls are one area of construction where contractors and engineers have generally disagreed. Contractors keep building unreinforced (or very minimally reinforced) walls which are **not** collapsing in great numbers. Meanwhile, engineers who specify even code minimum temperature and shrinkage reinforcing are accused of *over-designing* the foundation, by the foundation contractors. A general lack of understanding has existed with respect to residential foundation behaviour and changing construction practices have made a solution even more difficult.

Traditionally, house foundations were 8'-0" (2.44m) high rectangular boxes of limited size and utilized floor joists cast directly into the concrete. The behaviour of that type of system is markedly different than an irregularly shaped custom home of today with a ladder sill top of wall connection. As designers have increasingly *pushed the envelope* so have builders in an effort to make the designs into reality. Somewhere along the line, the inherent reliability of the foundation and the design mechanism have been lost.

From the work completed in this study an effort was made to restore some level of understanding of foundation wall behaviour. While doing so every effort was made to be as practical and economical as possible and to incorporate the experience gained by contractors' observations into the work. As with any theoretical work some level of discrepancy must be expected; however it was intended that this study would be as practical and realistic as possible and that the insights would be useful for designers and builders alike.

10.2 Foundation Wall Design

There has been a design and construction inconsistency in recent years that has even made it into the Alberta Building Code 1997. Part 9 of the code refers to the concept of a laterally supported foundation wall; however as we have shown in Section 8, the nominal top of wall connection specified in the code is not capable of supplying the required reaction for a vertically spanning wall. As well, the specified minimum backfill pressure outlined in the code is based on incorrect assumptions. The code minimum value of 30 pcf (480 kg/m^3) is based on retaining wall pressures (Terzaghi and Peck) for a very free-draining coarse grained soil (clean sand, gravel or broken stone) and a wall that is free to rotate at the top. This is generally not the case and the code is misleading in this area. Why then are walls not collapsing all over the place? The main reason is the inherent plate capacity of a monolithic concrete foundation wall system. This continuity of walls, gives the system the ability to span hoizontally between perpendicular wall supports. In this way the endwalls support the sidewalls and vice versa, similar to an open box set into the ground. Based on the results from the 3-Dimensional finite element model (Section 7), this plate capacity is substantial, particularly if the safety factor is ignored.

However, in order to provide a factor of safety equal to 2.0 as previously discussed, it is necessary to limit the maximum unsupported wall lengths quite substantially (see Table 8-2, restated in part as Table 10-1). The values in that table show the theoretical maximum wall lengths (measured from perpendicular walls) that would not require top of wall lateral support. Information from that table shows that although a foundation wall may indeed work in some cases without lateral support, for most practical cases reinforcement will be required.

From this chart it is apparent that for backfills exceeding 5' or 6' (1.52m to 1.83m), laterally unsupported wall systems do not provide adequate reliability against failure. Therefore, for walls exceeding the values indicated in the table, proper lateral support must be provided to the top of the wall. The walls may then be designed as a vertically spanning plate and detailed accordingly. Another reason we recommend detailing and constructing a vertically spanning wall is because reinforcing a vertical plate is considerably less complicated than trying to design, detail, and construct a horizontally spanning plate with positive and negative moments requiring reinforcement on two faces.

Having selected the system as vertically spanning, the appropriate backfill pressure may be selected from the three common types. Incidentally, we strongly recommend a sand/gravel type backfill. It provides a lower, more predictable backfill pressure and is not as susceptible to frost jacking and volume changes as silts and clays are. Of foundation failures observed in the field, the vast majority are a result of frost action or volume change in the soil. A proper backfill system as shown in Figure 10-1 will help to provide a long foundation life. As was pointed out by several contractors; however, this idealized system is not always practical in every situation, therefore we have carried through the design and detail for all soil types. It must be restated that building foundations in soils other than free-draining sand/ gravel are more risky and unpredictable. Based on Factor of Safety equal to 2.0, and proper top of wall lateral bracing, a typical 8" (203mm) wall constructed with minimum 20 MPa concrete should not require vertical reinforcing for backfills not exceeding those in Table 10-2.

For backfill heights exceeding those shown in the table, we recommend that the minimum reinforcement should be as indicated in Table 10-3.

Also, in situations where backfill soils are unpredictable or greater reliability is required, this minimum wall reinforcement should be utilized. It will help control cracking and provide the wall with adequate bending capacity regardless of cracking.

10.3 Top of Wall Lateral Support

If the maximum allowable unsupported wall length for a given backfill height is exceeded (see Table 10-1), it then becomes necessary to design, detail, and construct the system as laterally supported. This in turn means providing adequate lateral support to the top of the foundation wall. As discussed in Section 9, a galvanized framing strap detail is recommended as the most practical and economical method of providing this top of wall lateral support.

This detail maintains current practices as much as possible, and is very effective in providing the required reaction. Typically, these straps are best utilized at a spacing coinciding with the joist locations in order to provide a more uniform load transfer and avoid overloading individual components. For sidewalls where joists frame perpendicular to the wall, the recommended strap detail should be as per Figures 10-2A/2B as appropriate. The "A" figures are applicable for wood I-joist floor systems, and the "B" figures are applicable for floor systems constructed with dimensional lumber. For endwalls where joists frame parallel to the wall, the recommended strap detail should be as per Figure 10-3A/3B. Again, the "A" figures are applicable for wood I-joist floor systems, and the "B" figures are applicable for floor systems constructed with dimensional lumber. The strength of each type of connection may be varied to meet the project requirements of a particular foundation as outlined in Table 10-4 for a given strap spacing. From the Table and using the details shown in the Figure, the designer/ builder may select the appropriate construction detail, provided he is given the connection requirements.

The recommended connection requirements for various backfill conditions are given in Table 10-5 for 8'-0" (2.44m) walls and in Table 10-6 for 9'-0" (2.74m) walls. Together, this group of Tables and Figures allow the designer/ building to select and construct an appropriate top of wall lateral bracing detail.

To use these tools, first the designer selects the appropriate backfill type and height for the project. Then using Table 10-5 or Table 10-6, as appropriate, he finds the recommended top of wall connection type, for example A, B, C, etc. With this information, the designer may then select the appropriate variation of that connection from Table 10-4, and proceed to detail the construction. Table 10-4 allows the designer the flexibility to vary the spacing (every joist or every second joist in most cases) and to select an appropriate blocking spacing varying from 16" (406mm) on-centre up to 48" (1200mm) on-centre. Spacing options vary depending on the type and height of backfill material used.

10.4 Localized Reinforcement and Bracing

The areas surrounding local stress raisers in the wall such as window openings and stairwell openings require special attention to detail with respect to both concrete reinforcement and top of wall lateral bracing. Section 10.4.1 outlines the recommended reinforcement around such openings and Section 10.4.2 outlines the recommended lateral bracing each side of such openings.

10.4.1 Localized Wall Reinforcement

Window openings in concrete foundation walls initiate a stress redistribution around them and are a prime location for crack formation. To help prevent this and maintain the integrity of the wall we recommend that window openings are reinforced as shown on Figure 10-4. As shown, we recommend a minimum of 2-15M bars on each side of the opening. In addition, we recommend that where large windows up to 60" (1.52m) wide are to be closely spaced, that a minimum of 12" (305mm) be left between the windows and be reinforced as shown.

Areas adjacent to stairwell openings are also subject to stress concentration as revealed in Section 7, and we therefore recommend additional reinforcement in these areas as well. The recommended reinforcement schemes for these situations are as shown in Figure 10-5.

10.4.2 Lateral Bracing Each Side of Openings

In laterally supported walls it is necessary to provide additional lateral support to the top of the wall each side of window openings as well as each end of stairwells. This support is provided either by improving the joist to wall connection each side of the opening or by providing blocking each side of opening depending on whether the joist system runs parallel or perpendicular to the wall. Table 10-7 and Table 10-8 present a summary of recommended connections each side of window openings up to 60" (1.52m) wide. Similarly, Table 10-9 and Table 10-10 present a summary of recommended connections each side of stairwells 8' (2.44m), 10' (3.05m), and 12' (3.66m) wide. Each of these types of connections utilize variations on the basic lateral bracing presented in Figures 10-2A/2B, Figures 10-3A/3B, and Table 10-4. The procedure used to select the appropriate connection is similar to the top of wall requirements. First, enter Table 10-8, Table 10-9, Table 10-10, or Table 10-10 as appropriate and read off the recommended connection type. Then go to Table 10-4 and select the appropriate connections. Finally, install the connectors as per Figures 10-2A/2B and Figures 10-3A/3B.

10.5 Summary and Example

The previous subsections of this report present our recommendations for localized reinforcement and lateral bracing of 8" (203mm)) thick concrete residential foundation walls. In order to cover the wide range of situations encountered in this study, extensive use of charts are made. This is intended not only to cover the wide spectrum of design situations encountered in practice, but also to provide the designer/ builders flexibility in selecting and constructing workable solutions to the lateral stability problem.

In order to effectively utilize the material presented in this section we recommend that the designer/ builder approach each foundation problem with the following approach:

1. What type of backfill is appropriate?

2. Based on this, does the foundation wall require lateral support (Table 10-1)? If no, construct as per ABC 97 requirements. If yes, continue below.

3. Does the foundation wall require vertical reinforcement (Table 10-2)? If yes, select minimum reinforcement from Table 10-3.

4. Select localized reinforcement required for windows and stairwell locations from Figure 10-4 and Figure 10-5.

5. Select appropriate top of wall lateral bracing connection using Table 10-4, based on the specified minimum connections recommended in Table 10-5 for 8' (2.44m) walls and Table 10-6 for 9' (2.74m) walls. Ensure that this detailing is executed in the field, in accordance with Figure 10-2A or Figure 10-2B and Figure 10-3A or Figure 10-3B as appropriate. The "A" figures are applicable for manufactured wood floor systems, and the "B" figures are applicable for floor systems constructed with dimensional lumber.

6. Select appropriate top of wall lateral bracing connections using Table 10-4, for each side of windows (Table 10-7, Table 10-8), and each side of stairwells (Table 10-9, Table 10-10). Ensure that this detailing is executed in the field, in accordance with Figures 10-2A/2B and Figures 10-3A/3B.

In this way practical, efficient and cost-effective lateral bracing can be added, where necessary, to new residential foundations.

10.6 Limitations

This report; including the analysis, interpretation, recommendations, and details contained within; is a professional opinion on the subject of lateral bracing of residential foundation walls. Although no effort has been spared in an attempt to ensure accuracy and completeness of this report, neither Bearden Engineering Consultants Ltd. nor the author assumes responsibility for errors, oversights or consequences resulting from the misuse of the information contained herein. Anyone making use of the contents of this study assumes all liability arising from such use.

Table 10-1 Maximum Allowable Unsupported Wall Lengths (feet)

Wall Height	Backfill Height	Backfill Type			
		Code Minimum	Sand/ Gravel	Low Plastic Clay/Silt	High Plastic Clay
8 feet (2.44m)	4	60	60	60	60
	5	60	40	35	28
	6	45	23	23	21
	7	26	18	17	16
	7.5	25	17	16	16
9 feet (2.74m)	4	60	60	60	60
	5	60	47	43	35
	6	52	28	25	23
	7	28	22	20	18
	8	23	17	16	<15
	8.5	21	16	<15	<15

Notes:

1. All values are approximate and based on cracking strength of an unreinforced concrete foundation system.
2. The minimal reinforcement typically installed in a residential foundation system will not contribute to an increase in this number.

Table 10-2
Maximum Backfill Heights for Vertically Unreinforced Walls[1]

Wall Height	Backfill Type	Maximum Backfill Height[2] Vertically Unreinforced with F.S. ≤2.0
8'-0"	Code Minimum	7'-6" (2.28m)
	Sand/Gravel	7'-6" (2.28m)
	Low Plastic Clay	7'-6" (2.28m)
	High Plastic Clay	7'-0" (2.13m)
9'-0"	Code Minimum	8'-6" (2.59m)
	Sand/Gravel	8'-0" (2.44m)
	Low Plastic Clay	7'-6" (2.28m)
	High Plastic Clay	7'-0" (2.13m)

Notes:

1. 8" (200mm) 20MPa concrete wall.
2. Proper top of wall lateral support must be provided.

Table 10-3
Recommended Minimum Wall Reinforcement
If Conditions In Table 10-2 Are Exceeded

Horizontal	Vertical
2 - 15M continuous at top, mid, and bottom of wall or 10M at 12" (305mm) o/c	15M at 24" (600mm) o/c placed 1 1/2" (40mm) from inside face of wall or 10M at 12" (305mm) o/c placed 1 1/2" (40mm) from inside face of wall

Notes:

1. Reinforcement shall be deformed billet steel conforming to CAN/CSA G30.18.M92, minimum yield strength 400 MPa (60ksi)

Table 10-4
Lateral Bracing Connections

Type	Factored Load Range (lbs)	Framing Strap	Connection To Joist/Blocking	Connection To Concrete Wall
A	≤ 250 (1.11 kN)	1¼" x 24" lg x 20 ga	3- 3" common nails	1- ¼" dia x 3" lg Tapcon screw or 1- Hilti X-DNI anchor
B	≤ 500 (2.2 kN)	1¼" x 24" lg x 20 ga	6- 3" common nails or 3- ¼" dia x 3" lg lag screws	1- ¼" dia x 3" lg Tapcon screw or 1- Hilti X-DNI anchor
C	≤ 750 (3.3 kN)	1¼" x 24" lg x 20 ga	5- ¼" dia x 3" lg lag screws or 3- ⅜" dia x 3" lg lag screws	1- ¼" dia x 3" lg Tapcon screw or 2- Hilti X-DNI anchors
D	≤ 1000 (1.11 kN)	1¼" x 24" lg x 20 ga	4- ⅜" dia x 3" lg lag screws or 2- ½" dia x 3" lg lag screws	1- ¼" dia x 3" lg Tapcon screw or 2- Hilti X-DNI anchors
E	≤ 1500 (1.11 kN)	1¼" x 24" lg x 20 ga	3- ½" dia x 3" lg lag screws	2- ¼" dia x 3" lg Tapcon screws
F	≤ 2000 (1.11 kN)	1½" x 30" lg x 12 ga	4- ½" dia x 3" lg lag screws	2- ¼" dia x 3" lg Tapcon screws

Notes:

1. Refer to Figures 10-2 and 10-3 for connection installation details.
2. Refer to Appendix A6 and Figure A-1 for minimum connector spacings.
3. Strap connectors to possess a minimum yield strength of F_y = 295 MPa and minimum ultimate strength of 365 MPa, and be of galvanized construction.
4. Tapcon concrete screws by Ramset/ Red Head and Hilti X-DNI direct fasteners are brand names; however equivalent products may be used. Hilti-X-DNI direct fasteners are to be minimum 1½" x 9 ga (38mm x 3.7mm dia).
5. Required factored loads for given wall may be found in Table 10-5 and Table 10-6.

Table 10-5
Top of 8'-0" (2.44m) Foundation Wall Connections

Backfill Type	Backfill Height (ft)	Joist/Blocking Spacing (in)	Factored Connection Reaction (lbs)	Connection Type
Code Minimum	4	16	27	toe-nail (2- 3")
		19.2	32	toe-nail (2- 3")
		24	40	toe-nail (2- 3")
	5	16	87	toe-nail (2- 3")
		19.2	104	toe-nail (2- 3")
		24	130	toe-nail (2- 3")
	6	16	179	A @ 16" or B @ 32"
		19.2	214	A @ 19.2" or B @ 38.4"
		24	268	B @ 16" or C @ 48"
	7	16	304	B @ 16" or C @ 32"
		19.2	365	B @ 19.2" or C @ 38.4"
		24	456	B @ 24" or D @ 48"
	7.5	16	384	B @ 16" or C @ 32"
		19.2	461	B @ 19.2" or D @ 38.4"
		24	576	C @ 24" or E @ 48"
Sand/ Gravel	4	16	84	toe-nail to inside ladder (2- 3")
		19.2	101	toe-nail to inside ladder (2- 3")
		24	126	toe-nail to inside ladder (2- 3")
	5	16	199	A @ 16" or B @ 32"
		19.2	238	A @ 19.2" or B @ 38.4"
		24	298	B @ 24" or C @ 48"
	6	16	372	B @ 16" or C @ 32"
		19.2	446	B @ 19.2" or D @ 38.4"
		24	558	C @ 24" or E @ 48"
	7	16	613	C @ 16" or E @ 32"
		19.2	736	C @ 19.2" or E @ 38.4"
		24	920	D @ 24" or F @ 48"
	7.5	16	761	C @ 16" or E @ 32"
		19.2	914	D @ 19.2" or F @ 38.4"
		24	1142	E @ 24"

cont'd

Table 10-5 (cont'd)
Top of 8'-0" (2.44m) Foundation Wall Connections

Backfill Type	Backfill Height (ft)	Joist/Blocking Spacing (in)	Factored Connection Reaction (lbs)	Connection Type
	4	16	99	toe-nail to inside ladder (2- 3")
		19.2	118	toe-nail to inside ladder (2- 3")
		24	148	toe-nail to inside ladder (2- 3")
	5	16	229	A @ 16" or B @ 32"
		19.2	275	B @ 19.2" or C @ 38.4"
		24	344	B @ 24" or C @ 48"
Low	6	16	423	B @ 16" or D @ 32"
		19.2	507	B @ 19.2" or D @ 38.4"
Plastic		24	634	C @ 24" or E @ 48"
Silt/Clay	7	16	693	C @ 16" or E @ 32"
		19.2	832	D @ 19.2" or F @ 38.4"
		24	1040	D @ 24" or F @ 48"
	7.5	16	861	D @ 16" or F @ 32"
		19.2	1033	D @ 19.2" or F @ 38.4"
		24	1292	E @ 24"
	4	16	123	toe-nail to inside ladder (2- 3")
		19.2	149	toe-nail to inside ladder (2- 3")
		24	186	A @ 24" or B @ 48"
	5	16	279	A @ 16" or B @ 32"
		19.2	334	B @ 19.2" or C @ 38.4"
		24	418	B @ 24" or D @ 48"
High	6	16	509	B @ 16" or D @ 32"
		19.2	611	C @ 19.2" or E @ 38.4"
Plastic		24	764	C @ 24" or E @ 48"
Clay	7	16	830	D @ 16" or F @ 32"
		19.2	997	D @ 19.2" or F @ 38.4"
(Not Recom-		24	1246	E @ 24"
mended)	7.5	16	1030	D @ 16" or F @ 32"
		19.2	1237	E @ 19.2"
		24	1546	E @ 24"

Notes:

1. Refer to Table 10-4 Figure 10-2 and Figure 10-3 for lateral bracing detail and connection construction requirements.
2. All values below the dashed (---) line exceed the capacity of 2 - 3" common toe-nails per joist which is the typical capacity of a standard residential box-sill connection (see Section 8.2.1).

Table 10-6
Top of 9'-0" (2.74m) Foundation Wall Connections

Backfill Type	Backfill Height (ft)	Joist/Blocking Spacing (in)	Factored Connection Reaction (lbs)	Connection Type
	4	16	20	toe-nail (2- 3")
		19.2	24	toe-nail (2- 3")
		24	30	toe-nail (2- 3")
	5	16	72	toe-nail (2- 3")
		19.2	86	toe-nail (2- 3")
		24	108	toe-nail (2- 3")
Code	6	16	155	toe-nail (2- 3")
		19.2	186	A @ 19.2" or B @ 38.4"
Minimum		24	232	A @ 24" or B @ 48"
	7	16	267	A @ 16" or B @ 32"
		19.2	320	B @ 19.2" or C @ 38.4"
		24	400	B @ 24" or D @ 48"
	8	16	416	B @ 16" or D @ 32"
		19.2	500	B @ 19.2" or D @ 38.4"
		24	624	C @ 24" or E @ 48"
	8.5	16	508	B @ 16" or D @ 32"
		19.2	610	C @ 19.2" or E @ 38.4"
		24	762	C @ 24" or E @ 48"
	4	16	70	toe-nail to inside ladder (2- 3")
		19.2	85	toe-nail to inside ladder (2- 3")
		24	106	toe-nail to inside ladder (2- 3")
	5	16	173	A @ 16" or B @ 32"
		19.2	208	A @ 19.2" or B @ 38.4"
		24	260	A @ 24" or B @ 48"
Sand/	6	16	327	B @ 16" or C @ 32"
		19.2	392	B @ 19.2" or D @ 38.4"
Gravel		24	490	B @ 24" or D @ 48"
	7	16	541	B @ 16" or D @ 32"
		19.2	650	C @ 19.2" or E @ 38.4"
		24	812	D @ 24" or F @ 48"
	8	16	826	D @ 16" or F @ 32"
		19.2	992	D @ 19.2" or F @ 38.4"
		24	1240	E @ 24"
	8.5	16	1000	D @ 16" or F @ 32"
		19.2	1200	E @ 19.2"
		24	1500	E @ 24"

cont'd

Table 10-6 (cont'd)
Top of 9'-0" (2.74m) Foundation Wall Connections

Backfill Type	Backfill Height (ft)	Joist/Blocking Spacing (in)	Factored Connection Reaction (lbs)	Connection Type
	4	16	84	toe-nail to inside ladder (2- 3")
		19.2	101	toe-nail to inside ladder (2- 3")
		24	126	toe-nail to inside ladder (2- 3")
	5	16	199	A @ 16" or B @ 32"
		19.2	238	A @ 19.2" or B @ 38.4"
		24	298	B @ 24" or C @ 48"
Low	6	16	372	B @ 16" or C @ 32"
		19.2	446	B @ 19.2" or D @ 38.4"
Plastic		24	558	C @ 24" or E @ 48"
Silt/Clay	7	16	612	C @ 16" or E @ 32"
		19.2	734	C @ 19.2" or E @ 38.4"
		24	918	D @ 24" or F @ 48"
	8	16	933	D @ 16" or F @ 32"
		19.2	1120	E @ 19.2"
		24	1400	E @ 24"
	8.5	16	1126	E @ 16"
		19.2	1352	E @ 19.2"
		24	1690	F @ 24"
	4	16	107	toe-nail to inside ladder (2- 3")
		19.2	128	toe-nail to inside ladder (2- 3")
		24	160	toe-nail to inside ladder (2- 3")
	5	16	244	A @ 16" or B @ 32"
		19.2	293	B @ 19.2" or C @ 38.4"
		24	366	B @ 24" or C @ 48"
High	6	16	448	B @ 16" or D @ 32"
		19.2	538	B @ 19.2" or D @ 38.4"
Plastic		24	672	C @ 24" or E @ 48"
Clay	7	16	734	B @ 16" or E @ 32"
		19.2	882	D @ 19.2" or F @ 38.4"
(Not Recom-		24	1100	E @ 24"
mended)	8	16	1114	E @ 16"
		19.2	1338	E @ 19.2"
		24	1672	F @ 24"
	8.5	16	1344	E @ 16"
		19.2	1613	F @ 19.2"
		24	2016	F @ 24"

Notes:

1. Refer to Table 10-4, Figure 10-2 and Figure 10-3 for details and construction requirements for connection types.
2. All values below the dashed (---) line exceed the capacity of 2 - 3" common toe-nails per joist which is the typical capacity of a standard residential box-sill connection (see Section 8.2.1).

Table 10-7
Lateral Bracing for Window Openings in 8'-0" (2.44m) Walls

Backfill Type	Backfill Height (ft)	Factored Bracing Reaction (lbs)	Connection Type Required Each Side
Code Minimum	4	70	toe-nailed 2- 3" nails
	5	228	A
	6	469	B
	7	798	C
	7.5	1008	D
Sand/ Gravel	4	221	A
	5	522	B
	6	977	D
	7	1610	F
	7.5	2000	F
Low Plastic Silt/Clay	4	259	A
	5	602	C
	6	1110	E
	7	1820	E
	7.5	2261	DBL E
High Plastic Clay (Not recom-mended)	4	326	B
	5	732	C
	6	1337	E
	7	2181	DBL E
	7.5	2706	DBL E

Notes:

1. Maximum window size not to exceed 60" (1.52m) in width or extend further than 30" (760mm) below top of wall.
2. Refer to Figure 10-2 and Figure 10-3 for lateral bracing detail and Table 10-4 connection construction requirements.
3. Where double (DBL) connections are recommended, double joists or double blocking should be installed, each with framing strap connected as specified.

Table 10-8
Lateral Bracing for Window Openings in 9'-0" (2.74m) Walls

Backfill Type	Backfill Height (ft)	Factored Bracing Reaction (lbs)	Connection Type Required Each Side
Code Minimum	4	53	toe-nailed 2- 3" nails
	5	189	A
	6	406	B
	7	700	C
	8	1092	E
	8.5	1382	E
Sand/ Gravel	4	185	A
	5	455	B
	6	858	D
	7	1421	E
	8	2170	DBL D
	8.5	2625	DBL E
Low Plastic Silt/Clay	4	221	A
	5	521	B
	6	977	D
	7	1607	F
	8	2450	DBL E
	8.5	2958	DBL E
High Plastic Clay (Not recom-mended)	4	280	B
	5	640	C
	6	1176	E
	7	1929	F
	8	2926	DBL E
	8.5	3528	DBL F

Notes:

1. Maximum window size not to exceed 60" (1.52m) in width or extend further than 30" (760mm) below top of wall.
2. Refer to Figure 10-2 and Figure 10-3 for lateral bracing detail and Table 10-4 connection construction requirements.
3. Where double (DBL) connections are recommended, double joists or double blocking should be installed, each with framing strap connected as specified.

Table 10-9
Lateral Bracing for Stairwell Openings in 8'-0" (2.44m) Walls

Backfill Type	Backfill Height (ft)	Connection Type Required Each Side Stair Opening		
		8'-0" Width	10'-0" Width	12'-0" Width
Code Minimum	4	A	B	B
	5	B	C	C
	6	D	E	E
	7	E	F	DBL E
	7.5	F	F	DBL E
Sand/ Gravel	4	B	C	C
	5	D	E	E
	6	F	F	DBL E
	7	DBL E	DBL F	TPL E
	7.5	DBL E	DBL F	TPL F
Low Plastic Silt/Clay	4	B	C	D
	5	D	E	F
	6	F	DBL E	DBL E
	7	DBL E	DBL F	TPL F
	7.5	DBL F	TPL E	TPL F
High Plastic Clay (Not recom-mended)	4	C	D	D
	5	E	F	F
	6	F	DBL E	DBL F
	7	DBL F	TPL E	TPL F
	7.5	DBL F	TPL F	Not Recommended

Notes:

1. Refer to Figure 10-2 and Figure 10-3 for lateral bracing detail, and Table 10-4 for connection construction requirements.
2. Where double (DBL) or triple (TPL) connections are recommended, double joists (or blocking) or triple joists (or blocking) should be installed, each with framing straps connected as specified.

Table 10-10
Lateral Bracing for Stairwell Openings in 9'-0" (2.74m) Walls

Backfill Type	Backfill Height (ft)	Connection Type Required Each Side Stair Opening		
		8'-0" Width	10'-0" Width	12'-0" Width
Code Minimum	4	A	B	B
	5	B	C	C
	6	C	D	E
	7	E	E	F
	8	F	DBL E	DBL E
	8.5	DBL E	DBL E	DBL F
Sand/ Gravel	4	B	C	C
	5	D	D	E
	6	E	F	DBL E
	7	DBL E	DBL E	DBL F
	8	DBL F	TPL E	TPL F
	8.5	DBL F	TPL F	Not Recommended
Low Plastic Silt/Clay	4	B	C	D
	5	D	E	E
	6	F	F	DBL E
	7	DBL E	DBL F	TPL E
	8	DBL F	TPL F	Not Recommended
	8.5	TPL E	TPL F	Not Recommended
High Plastic Clay (Not recom-mended)	4	C	C	D
	5	E	E	F
	6	F	DBL E	DBL F
	7	DBL E	DBL F	TPL F
	8	TPL E	TPL F	Not Recommended
	8.5	TPL F	Not Recom.	Not Recommended

Notes:

1. Refer to Figure 10-2 and Figure 10-3 for lateral bracing detail, and Table 10-4 for connection construction requirements.
2. Where double (DBL) or triple (TPL) connections are recommended, double joists (or blocking) or triple joists (or blocking) should be installed, each with framing straps connected as specified.

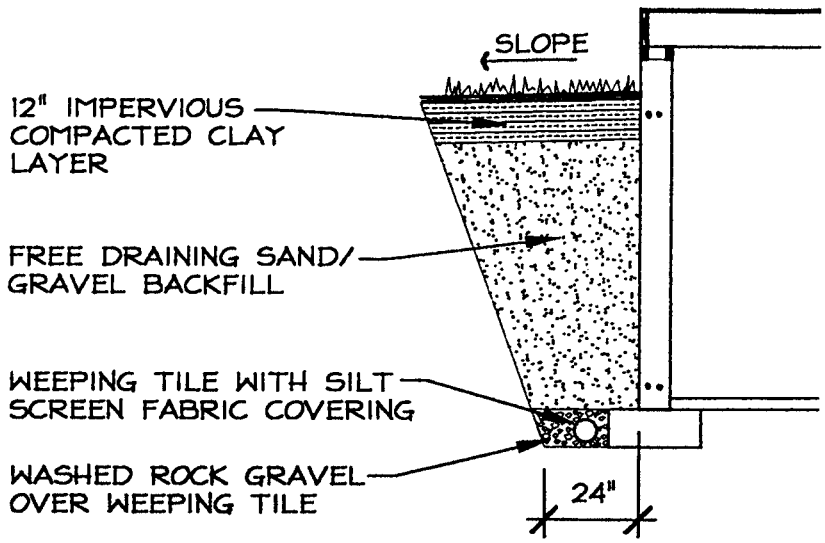

FIGURE 10-1 – RECOMMENDED BACKFILL SYSTEM

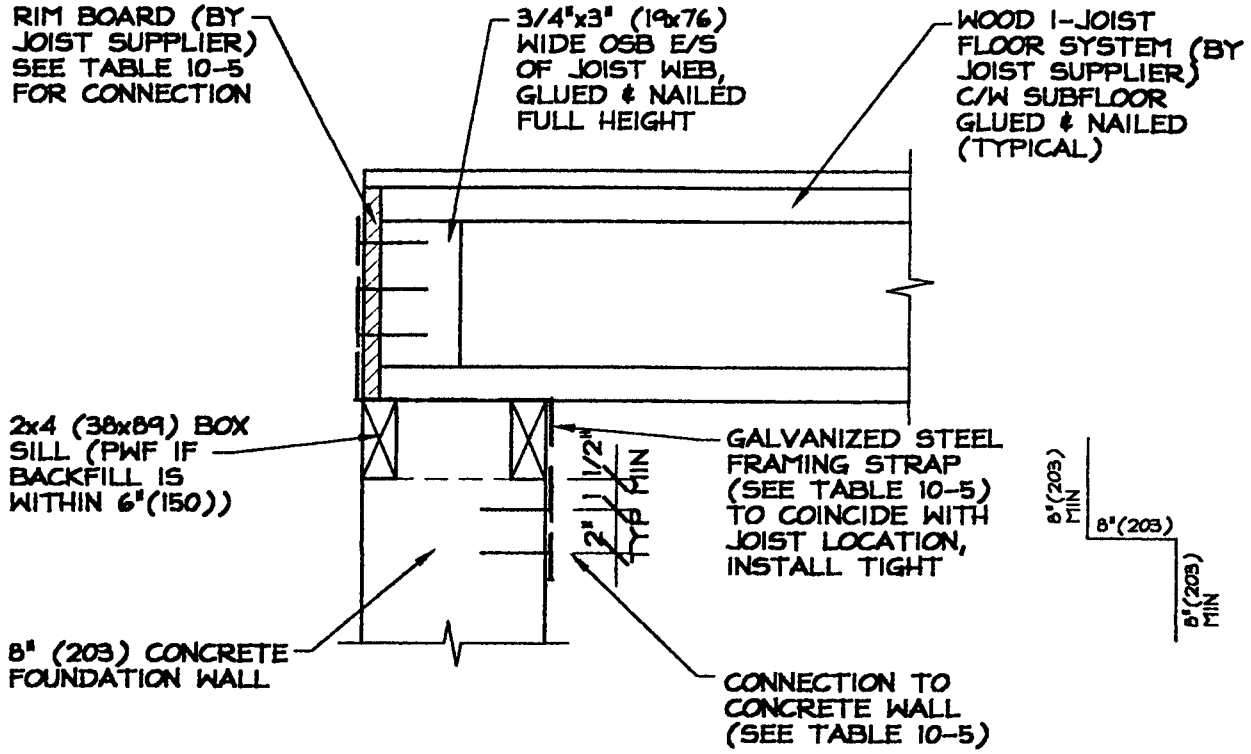

FIGURE 10-2A – LATERAL BRACING, SIDEWALL CONDITION (WOOD I-JOIST SYSTEM)

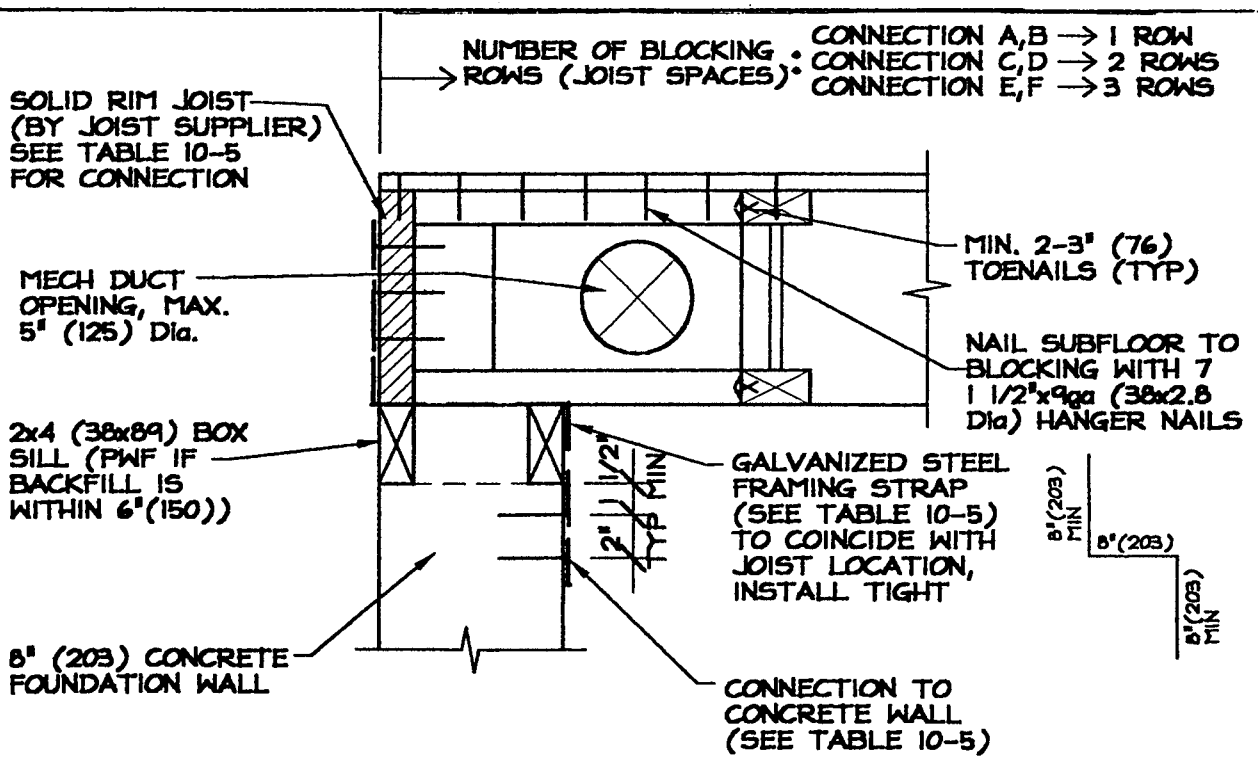

FIGURE 10-3A – LATERAL BLOCKING, ENDWALL CONDITION (WOOD I-JOIST SYSTEM)
SEE ALSO NOTES FOR FIGURE 10-2A

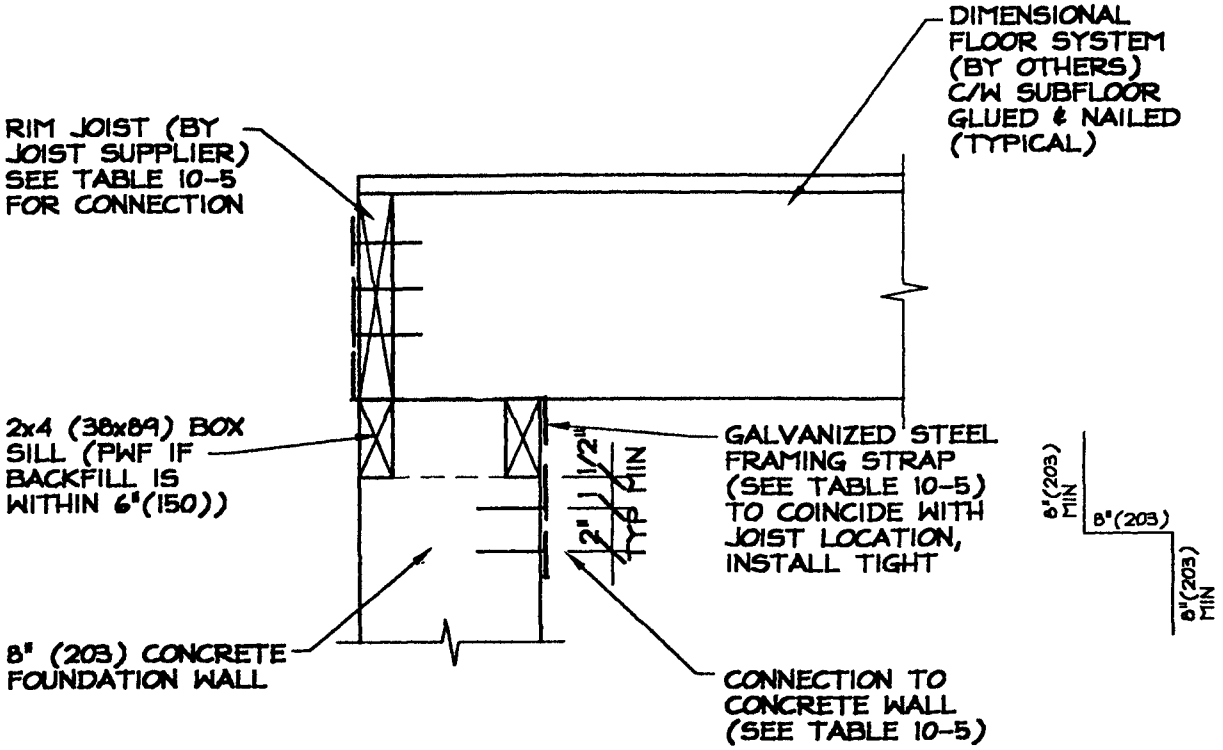

FIGURE 10-2B – LATERAL BRACING, SIDEWALL CONDITION (DIMENSIONAL LUMBER SYSTEM)

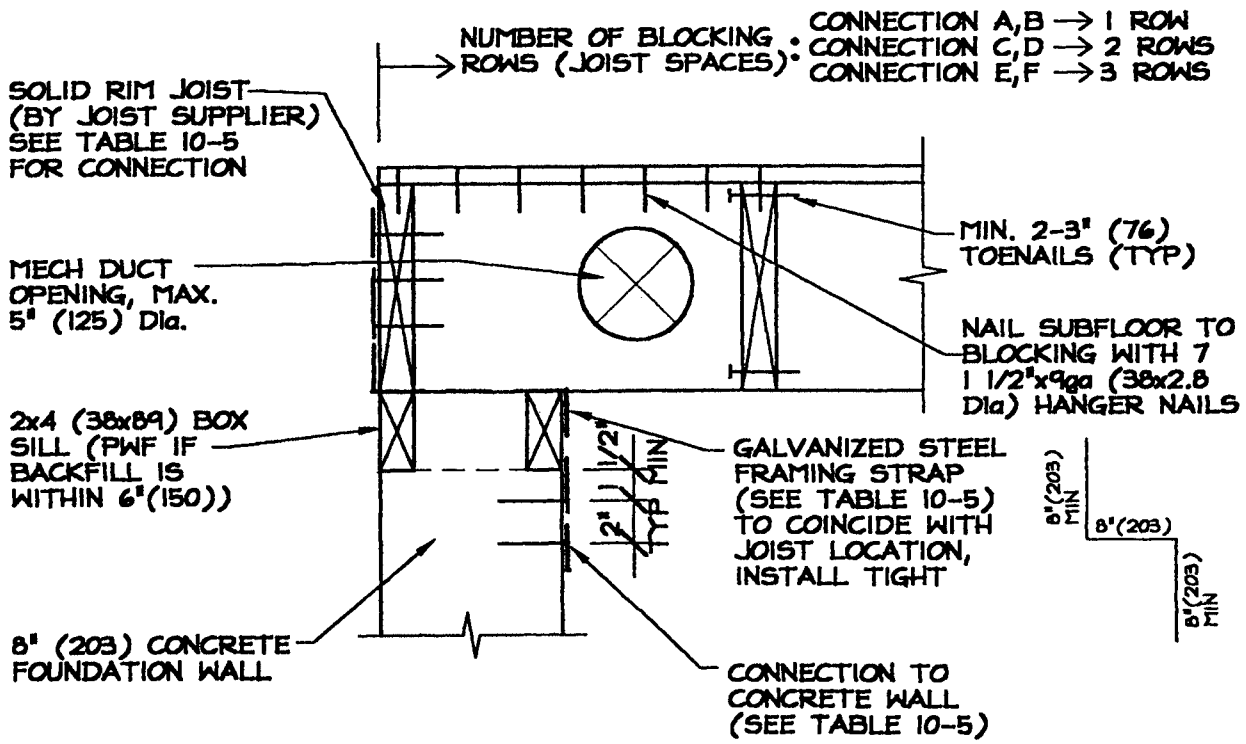

FIGURE 10-3B – LATERAL BLOCKING, ENDWALL CONDITION (DIMENSIONAL LUMBER SYSTEM)
SEE ALSO NOTES FOR FIGURE 10-2B

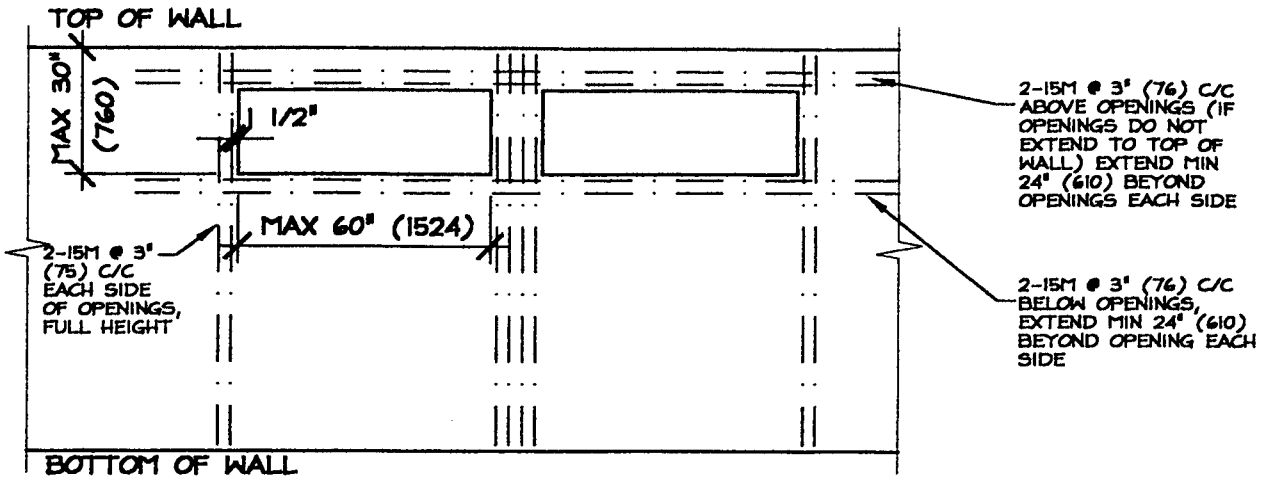

NOTES:
(1) PLACE ALL REINFORCEMENT 1 1/2" (38) FROM INSIDE FACE OF WALL.
(2) REINFORCEMENT TO BE DEFORMED BILLET STEEL CONFORMING TO CAN/CSA - G30.18-M92, MINIMUM YIELD STRENGTH 400MPa.
(3) MAXIMUM WINDOW WIDTH NOT TO EXCEED 60" (1524).

FIGURE 10-4 – REINFORCEMENT AROUND BASEMENT WINDOWS

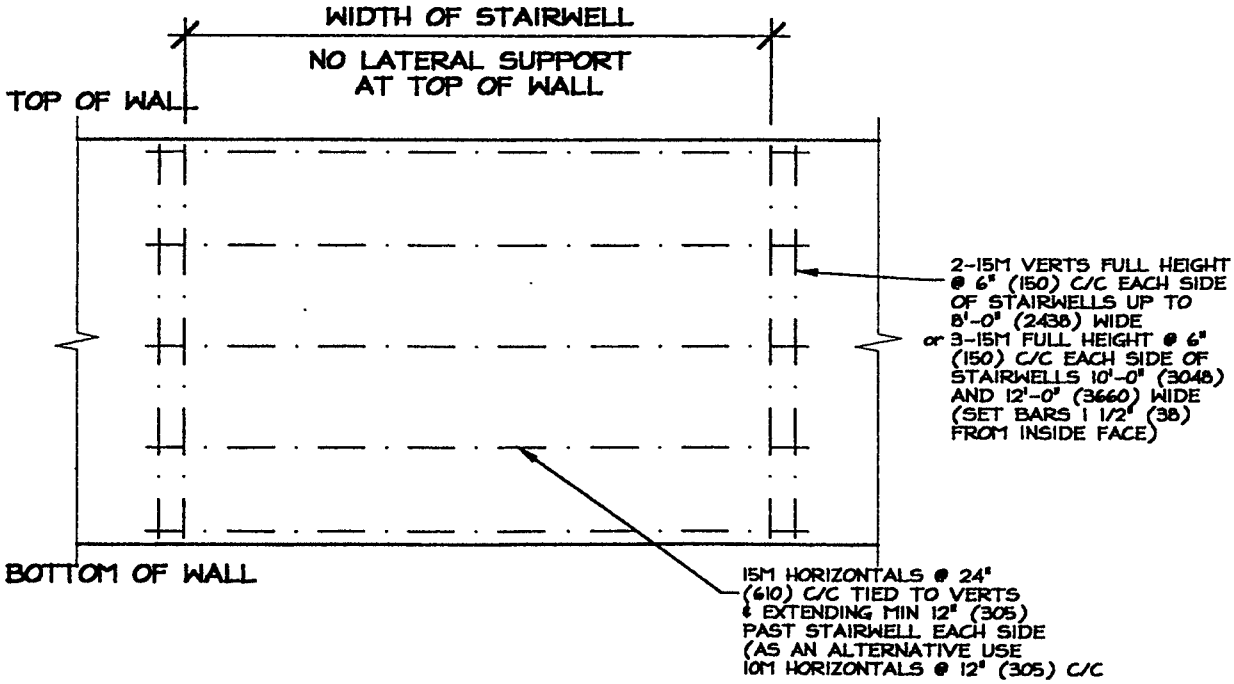

FIGURE 10-5 – REINFORCEMENT AT STAIRWELLS
SEE ALSO NOTES FOR FIGURE 10-4

Appendix A
Lateral Bracing

The design of top of wall lateral bracing is covered in this appendix. A framing strap detail was selected as the most practical and cost effective method of providing lateral support to the top of wall (Figures 10-2A/2B and 10-3A/3B). Each of the components are designed in turn in the following appendices.

A.1 Framing Straps

Galvanized framing straps are readily available from MGA Connectors are produced from steel with a minimum yield strength F_y = 295 MPa, and an ultimate strength of F_u = 365 MPa. The following calculations are based on these values. Framing straps produced by others such as Simpson Strong-Tie may be substituted provided that the material meets these minimum specifications, or the strap thickness is adjusted accordingly.

Commonly available 1¼" (32mm) x 20 ga (0.912mm) straps will be adequate for most purposes, but under certain high backfill or large load transfer conditions, heavier gauge material must be utilized..

Gross section yield of strap (as per CSA S136-94 "Cold Formed Steel Structural Members")

$$T_r = \phi_u F_y A$$
$$= (0.75)\ (295\ \text{MPa})\ (32\text{mm} \times 0.912\text{mm})$$
$$= 6.46\ \text{kN}\ (1452\ \text{lbs})$$

for 1¼" (32mm) x 18 ga (1.214mm) strap

$$T_r = (0.75)\ (295\ \text{MPa})\ (32\text{mm} \times 1.214\text{mm})$$
$$= 8.60\ \text{kN}\ (1932\ \text{lbs})$$

for 1¼" (32mm) x 16 ga (1.519mm) strap

$$T_r = (0.75)\ (295\ \text{MPa})\ (32\text{mm} \times 1.519\text{mm})$$
$$= 10.75\ \text{kN}\ (2418\ \text{lbs}).$$

Net section fracture will be checked for each fastener type used with the strap, in accordance with CSA S136-94

$$T_r = \phi_u F_u A_n$$

A.2 Nails

Common wire nails may be used in some incidences to anchor the framing strap to the members and in nailing the subfloor sheathing to blocking. Nail capacities are calculated in accordance with CSA 086.1-94 "Engineering Design in Wood (Limit States Design)", utilizing a load duration factor $K_D = 0.65$ in accordance with long term load duration.

(a) 2½" common nails (3.25mm dia) in SPF material:

$$N_r = \phi\, n_u n_f\, n_{se}\, K'J'$$
$$= 0.462\ (1.0)\ (1.0)\ (0.65)\ (1.0)$$
$$= 0.300 \text{ kN (68 lbs)}$$

(b) 3" common nails (3.66mm dia) in SPF material:

$$N_r = \phi\, n_u n_f\, n_{se}\, K'J'$$
$$= 0.600\ (1.0)\ (1.0)\ (0.65)\ (1.0)$$
$$= 0.390 \text{ kN (88 lbs)}$$

(c) 1½" or 3" x 10d (9 ga) nails (3.80mm dia) in SPF material:

$$N_r = 0.623\ (1.0)\ (1.0)\ (0.65)\ (1.0)$$
$$= 0.405 \text{ kN (91 lbs)}$$

(d) 3½" common nails (4.06mm dia) in SPF material:

$$N_r = 0.720\ (1.0)\ (1.0)\ (0.65)\ (1.0)$$
$$= 0.468 \text{ kN (105 lbs)}$$

Net section fracture of framing strap at nail holes:

$$T_r = 0.75\ (365 \text{ MPa})\ [\ (32\text{-}4.06)\ (0.921)]$$
$$= 7.04 \text{ kN (1571 lbs)}$$

Therefore gross section yield governs strap capacity, and nailing does not reduce the capacity of the strap.

A.3 Lag Screws

Lag screws may be required to anchor the framing straps to the members where large forces are present. Capacities of lag screws are calculated in accordance with CSA 086.1-94 "Engineering Design in Wood (Limit States Design)", utilizing a load duration factor $K_D = 0.65$ in accordance wtih long term load duration.

(a) ¼" dia lag screws (perpendicular to grain in SPF)

$Q_r = Q_r' \, n_{fe} \, n_r \, K'$
$= 1.13 \, (1.0) \, (1.0) \, (0.65)$
$= 0.735$ kN (165 lbs)

Bearing on steel strap (20 ga)

$B_r = \phi_u C d t F_u$
$= 0.75 \, (3) \, (6.4) \, (0.912) \, (365 \text{ MPa})$
$= 4.79$ kN (1078 lbs) → wood governs as expected

Net section fracture of strap

$T_r = 0.75 \, (365 \text{ MPa}) \, [(32-6.4) \, (0.912)]$
$= 6.39$ kN → gross section governs

(b) ⅜" dia lag screws (perpendicular to grain in SPF)

$Q_r = 2.00 \, (1.0) \, (1.0) \, (0.65)$
$= 1.30$ kN (293 lbs)

Net section fracture of strap

$T_r = 0.75 \, (365 \text{ MPa}) \, [(32-9.5) \, (0.912)]$
$= 5.62$ kN (1263 lbs) → governs capacity of strap

in 18 ga strap	T_r	= 7.48 kN (1680 lbs)
in 16 ga strap	T_r	= 9.36 kN (2104 lbs)

(c) ½" dia lag screws (perpendicular to grain in SPF)

$Q_r = 3.66 \, (1.0) \, (1.0) \, (0.65)$
$= 2.38$ kN (535 lbs)

Net section fracture of strap (governs)

in 20 ga strap	T_r	= 4.74 kN (1066 lbs)
in 18 ga strap	T_r	= 6.31 kN (1420 lbs)
in 16 ga strap	T_r	= 7.90 kN (1776 lbs)
in 12 ga strap	T_r	= 13.80 kN (3107 lbs)

A.4 Concrete Fasteners

Various types of fasteners may be used to anchor the strap to the concrete wall. For economy and ease of installation, coupled with high shear capacity ¼" dia Tapcon screws by Ramset/Red Head or equivalent are recommended while for higher loads Hilti or equivalent direct fasteners may be used:

(a) For ¼" dia x 3" lg Tapcon screws (or equivalent)

Minimum 3¼" length with minimum
1¾" embedment

Ultimate shear load 2140 lbs
with F.S. = 2.0

V_{all} = 1070 lbs per anchor

(b) For Hilti X-DNI direct fasteners:

Minimum size 1½" x 9ga (38mm x 3.77mm dia)

Minimum embedment 1" (25mm)

V_{all} = 710 lbs per anchor

Check bearing on strap (min. 20ga)

$$B_r = \phi_u C d t F_u$$
$$= (0.75)(3)(3.77)(0.912)(365)$$
$$= 2.82 \text{ kN } (634 \text{ lbs}) \rightarrow \text{governs.}$$

Therefore limit capacity of direct fasteners to V_r = 634 lbs

A.5 Endwall Blocking

Subfloor sheathing is nailed to the joists and to the endwall blocking where specified to transfer the load into the floor diaphragm. Subfloor glue simiar to PL400 or equivalent is also recommended.

With a floor joist's space of 16" (406.4mm) the maximum number of nails per endwall blocking panel governed by spacing specified by CSA 086.1-94 are as follows.

(a) 2½" comon nails @ 2" on centre, ½" end distance minimum = 8 nails
N_r = 8 x 0.300 kN = 2.4 kN (540 lbs)

(b) 3" comon nails @ 2¼" on centre, ⅝" end distance minimum = 7 nails
N_r = 7 x 0.390 kN = 2.73 kN (614 lbs)

(c) 1½" x 9 ga langer nails @ 2½" on centre = 7 nails
N_r = 7 x 0.405 kN = 2.84 kN (633 lbs)

Some lateral blocking situations will require more than one row of blocking . For joist spacings at 19.2" (487.68mm) on centre or 24" (600mm) on centre, additional nailing will be required to resist each blocking point load.

A.6 Connection Geometry

Connection Geometry of fastening the framing strap to the joist system/ endwall blocking requires careful attention to detailing of the fasteners and their minimum spacings. Various connection geometries are laid out for the different fasteners in Figure A-1.

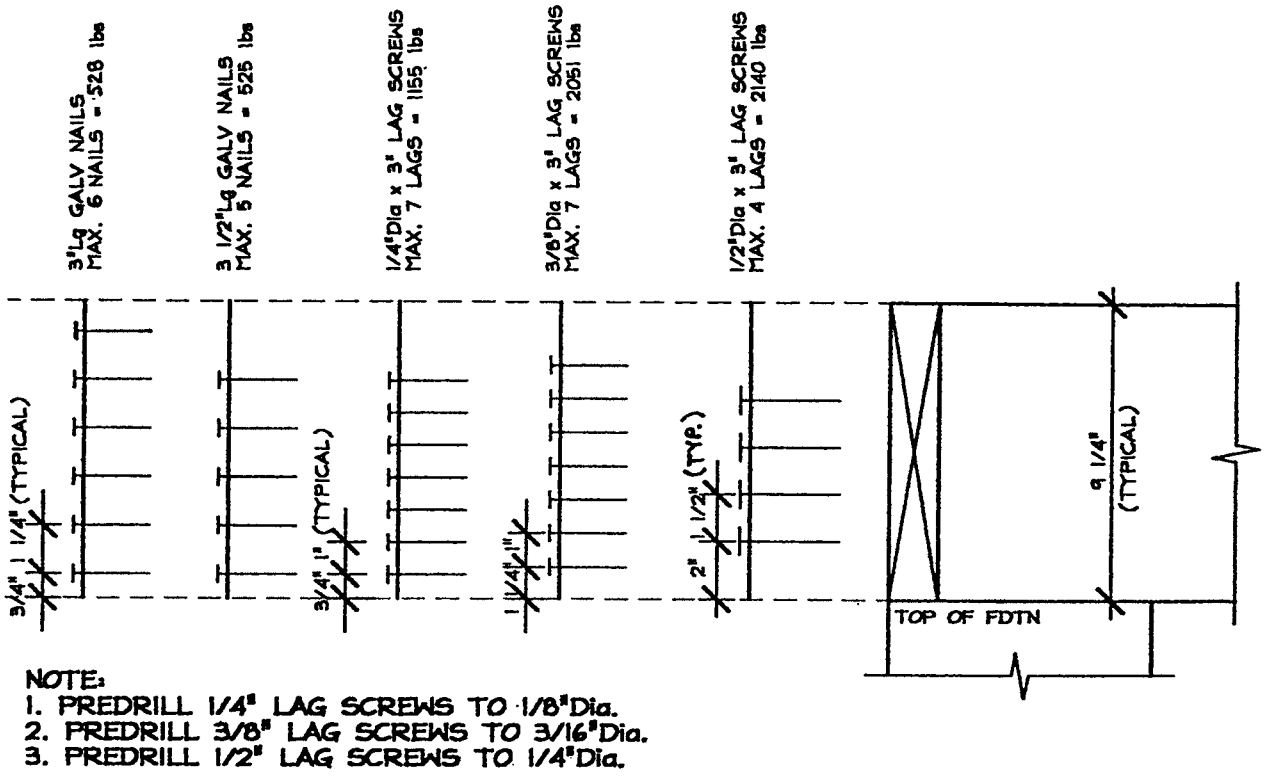

FIGURE A-1
FRAMING STRAP CONNECTION TO JOIST SYSTEM/ ENDWALL BLOCKING

Appendix B
Concrete Design

The design of reinforced concrete sections are covered by this appendix.

B.1 Minimally Reinforced Section

Unit capacity of 8' (200mm) concrete wall
Assumptions: concrete strength $f'_c = 20$ MPa
steel yield $f_y = 400$ MPa

Reinforcement 15M @ 24" o.c. $\rightarrow A_s = 333 mm^2/m$

$$T_r = \phi_s F_y A_s$$
$$= 0.85 (400 \text{ MPa}) (333 mm^2)$$
$$= 113 \text{ kN}$$

$$a = \frac{T_r}{\phi_c \cdot B \cdot F'_c \cdot b}$$

$$= \frac{113 \text{ kN}}{(0.6)(0.85)(20)(1000mm)} = 11.1mm$$

assuming 1½" (40mm) concrete cover
$d = 200 - 40 - 15/2 = 153mm$

then $M_r = T_r \cdot jd$
$$= 113 \text{ kN} \left[153 - \frac{11.1}{2}\right]$$
$$= 16.7 \text{ kN} \cdot \text{m/m} \quad (3.75 \text{ kip} \cdot \text{ft/ft})$$

Therefore minimum temperature steel would not increase the strength of the wall but would be available if a shrinkage crack compromised the intergrity of wall.

Appendix C
Bibliography and References

1 Terzaghi, Karl, and Ralph B. Peck. Soil Mechanics in Engineering Practice, 2nd Edition, Chapter 8. New York: John Wiley and Sons, 1967.

2 Gupton, Charles P. "Section Six - Soil Mechanics and Foundations," Building Design & Construction Handbook, 5th Edition, ed. Frederick S. Merrit and Jonathan T. Ricketts (McGraw-Hill Inc, 1994).

3 Wu, T.H., "Chapter 12 - Retaining Walls," Foundation Engineering Handbook, ed. Hans F. Winterkorn and Hsai-Yang Fang (Van Nostrand Reinhold, 1975).

4 Ireland, Herber O., "Section 7 - Retaining Structures and Foundations," Structural Engineering Handbook, 3rd Edition, ed. Edwin H. Gaylord, JR, and Charles N. Gaylord (McGraw Hill, 1990).

5 Canada Mortgage and Housing Corporation, Canadian Wood-frame House Construction (CMHC, 1997).

6 National Building Code of Canada 1995, National Research Council of Canada, Ottawa, 1995.

7 Alberta Building Code 1997, National Research Council of Canada, Ottawa, 1998.

8 Wood Design Manual 1995, Canadian Wood Council, Ottawa, 1995.

9 Concrete Design Handbook, Canadian Portland Cement Association, 1995.

10 Permanent Wood Foundations, Canadian Wood Council, Ottawa, 1992.