RESEARCH REPORT

Shallow, Frost Protected Wood Foundations: A Design Guide for Rural, Northern and First Nations Housing

Canada

CMHC SCHL
HOME TO CANADIANS

CMHC—HOME TO CANADIANS

Canada Mortgage and Housing Corporation (CMHC) has been Canada's national housing agency for more than 60 years.

Together with other housing stakeholders, we help ensure that Canada maintains one of the best housing systems in the world. We are committed to helping Canadians access a wide choice of quality, affordable homes, while making vibrant, healthy communities and cities a reality across the country.

For more information, visit our website at **www.cmhc.ca**

You can also reach us by phone at 1-800-668-2642 or by fax at 1-800-245-9274.

Outside Canada call 613-748-2003 or fax to 613-748-2016.

Canada Mortgage and Housing Corporation supports the Government of Canada policy on access to information for people with disabilities. If you wish to obtain this publication in alternative formats, call 1-800-668-2642.

SHALLOW, FROST PROTECTED WOOD FOUNDATIONS

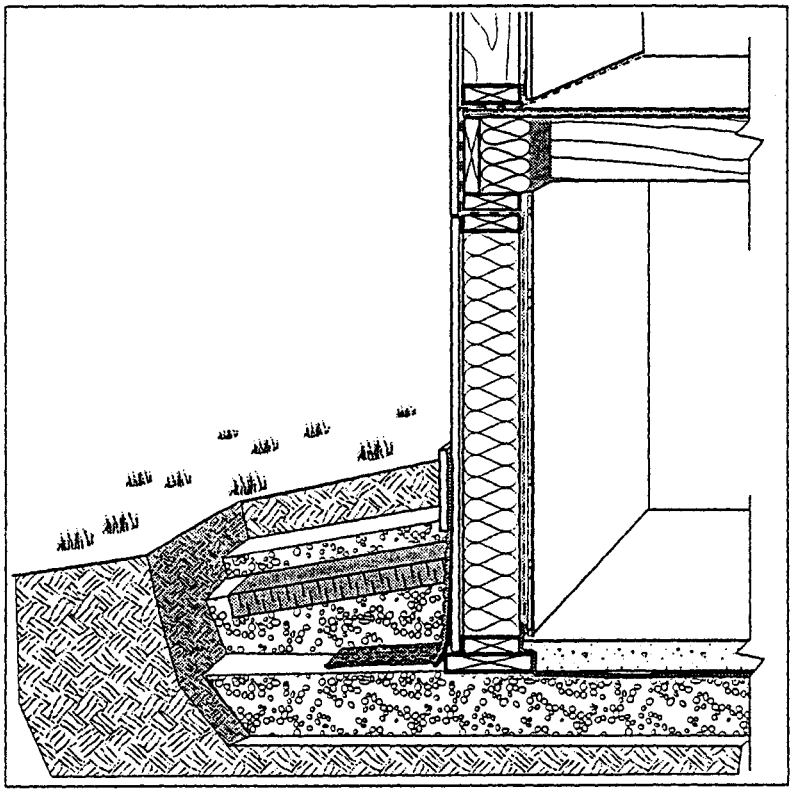

A Design Guide for Rural, Northern and First Nations Housing

ONTARIO FIRST NATIONS TECHNICAL SERVICES CORP.

CMHC SCHL

Helping to house Canadians

Question habitation, comptez sur nous

Credits

This publication has been developed by the Ontario First Nations Technical Services Corporation (OFNTSC), with financial assistance from Canada Mortgage and Housing Corporation (CMHC). We would like to acknowledge the following people for their contribution in the development and review of this publication:

- Buchan, Lawton, Parent Ltd.
- Guy Titley, Dow Chemical Canada Inc.
- Oliver Drerup, CMHC
- REIC (Consulting) Ltd.
- The McLeod Associates

Disclaimer

The booklet is solely intended for the purposes of constructing shallow, frost protected wood foundations subject to the limitations set out. The scope is not intended to encompass any other aspects of the house construction.

The design and the construction of the foundation is solely the responsibility of the builder/contractor. Consequently, we cannot accept liability for modifications to the design method or for use of the design method outside the stated limitations, or for designs not built according to Codes and good building practice. Furthermore, we cannot accept responsibility for material defects, specific site conditions or for the builder/contractor's judgement and as such, no warranty is expressed or implied.

Table of Contents

1. Introduction

Purpose of This Guide

There is growing interest in shallow, frost protected foundations (SFPF) especially for rural, northern and First Nations housing. Such foundations provide a lower cost, energy-efficient alternative to conventional foundations. Not only are they more appropriate to construction methods used in remote locations, but they are less prone to moisture and thermal problems than many conventional foundation construction methods.

This booklet is intended to act as a concise guide, providing builders with design resources to be able to successfully construct a shallow, frost protected wood foundation with a heated crawl space.

The guide is intended to give builders the knowledge and confidence to construct trouble-free, SFPF housing based on heated crawl space, and preserved wood design.

The design principles addressed in the booklet could be equally applied to cast-in-place concrete or block foundation walls — using the equivalent insulation principles and requirements for frost protection. Design and construction of cast-in-place or block foundation walls (footings, thickness, lateral restraint, etc.) would need to abide by the prescriptive requirements of local Codes or Part 9 of the National Building Code.

It is the intention that, for design/site conditions that fall within the guidelines set out in this booklet, a shallow, frost protected wood foundation can be designed and constructed without need to retain a professional engineer except in extreme or non-typical circumstances.

A Brief History

In Canada, tradition and concerns about frost heave have led to the mistaken impression that good design practice requires that foundations must be constructed on footings located below the frost line. In the days before full basement construction, however, leaves, straw, seaweed, soil and even snow were frequently placed next to exterior walls to protect foundations from temperature extremes. Modern frost protection methods are an extension of this practice — using rigid insulation to protect the foundation.

Modern shallow, frost protected foundations (SFPF) have been in common usage for more than 35 years. In Scandinavia, more than a million SFPF have been built with very successful results. Interestingly, the design guides used in these countries are largely based on Canadian research.

Many Canadian authorities have concluded that shallow, frost protected foundations provide one of the most effective ways of improving the affordability and quality of housing in northern climates. The Ontario First Nations Technical Service Corporation (OFNTSC) and Canada Mortgage and Housing Corporation (CMHC) have prepared this booklet specifically to remove barriers to the use of shallow, frost protected foundations in rural, northern and First Nations housing.

Benefits of Shallow, Frost Protected Foundations

A properly designed, insulated shallow foundation has been proven to provide a trouble-free, comfortable construction for a variety of residential and non-residential buildings. The benefits of using such foundations include:

- lower construction costs;
- reduced excavation costs;
- reduced use of materials;
- greater ease and speed of construction;
- reduced need to drain adjacent soils;
- avoidance of problems related to moisture;
- reduced need for use and operation of drainage sumps;
- reduced potential for soil gas accumulation; and
- savings in building heating and operational costs.

Building a heated crawl space using preserved wood provides additional benefits including:

- warmer floors;
- elimination of plumbing and sewage pipe freeze-ups;
- a warm location for mechanical equipment;
- can be constructed with local skills; and
- simplified footing and drainage schemes.

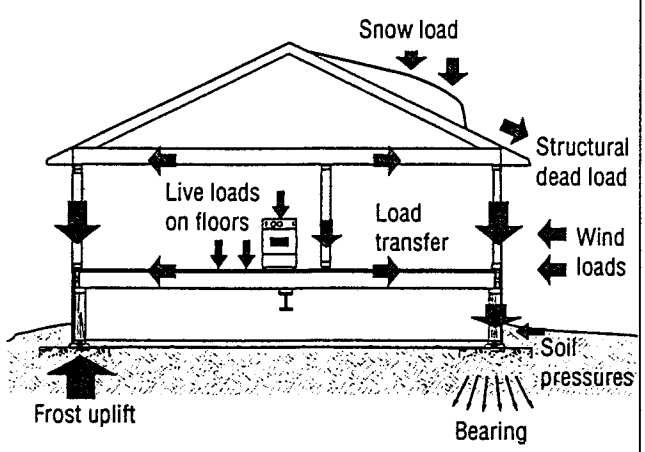

Structural Loading

Issues and Concerns

The most common concerns associated with shallow foundation construction in Canadian climates relate to the potential for frost heave and settlement leading to foundation cracks, movement of the structure, damage to finishes and structural problems. These problems can be expensive to repair.

With the placement of footings at or near grade, care is needed with respect to items such as:

- *structural issues* — foundations must bear on undisturbed soil, free of organic matter. Walls must be capable of resisting lateral soil pressure (see illustration);
- *heat flow* — insulation levels and placement procedures must account for both occupant comfort as well as frost protection concerns;
- *air leakage* — the foundation system must be designed to avoid bringing soil gases into the home and to restrict the flow of air into and out of the house; and
- *moisture* — foundations must be designed to restrict the entry of water and to prevent the movement of soil vapour into the building.

Traditional full depth foundation designs have typically avoided many of these problems by placing footings below the depth of frost penetration. Shallow, frost protected foundations use insulation in place of soil to control heat loss and avoid freezing conditions next to and beneath the foundation. Simply stated, 2" (50 mm) of insulation serves the same function as 4' (1.2 m) of soil in protecting the footings.

Insulation is used to retain heat in the vicinity of the foundation coming from two sources:

- heat flowing from the inside of the house to the soil beneath and beside the foundation; and
- geothermal heat from the deep soil: heat stored in the earth below the frost level.

Design Principles

To understand the rationale behind shallow foundation design, it is important to understand the nature of foundation heat loss.

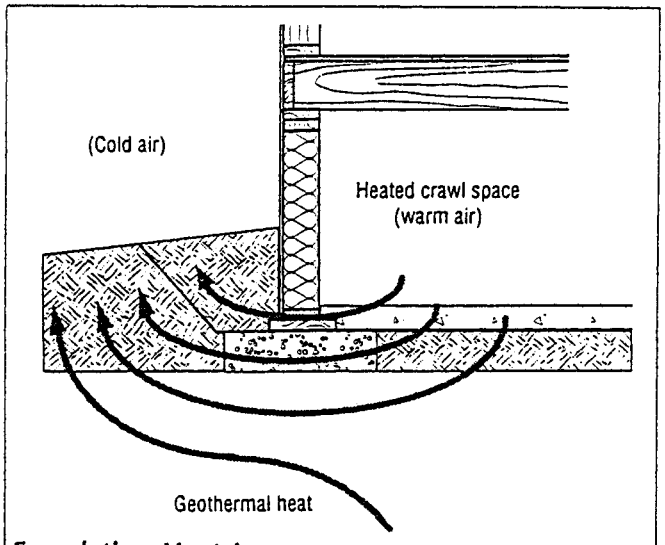

Foundation Heat Loss

The most significant heat loss from a building foundation occurs in the perimeter band of soil immediately adjacent to the building. Heat loss at corners is most pronounced because it occurs in two directions.

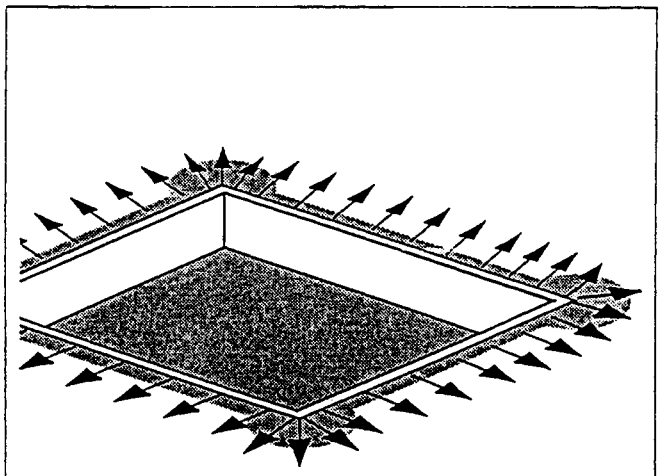

Heat Loss at Corners

By strategically placing foundation insulation, this heat loss can be used to keep the footing from freezing and heaving.

Horizontal insulation, installed in "wings" sloping outward from the footing area, around the perimeter of the foundation, has the following effects:

- it extends the heat flow path;
- it controls heat loss; and
- it moves the line of frost penetration away from the footing area.

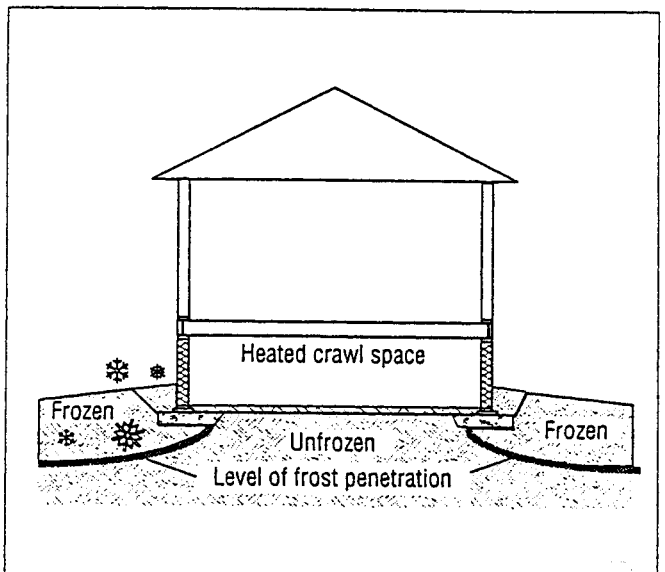

Frost Penetration in Conventional Crawl Space

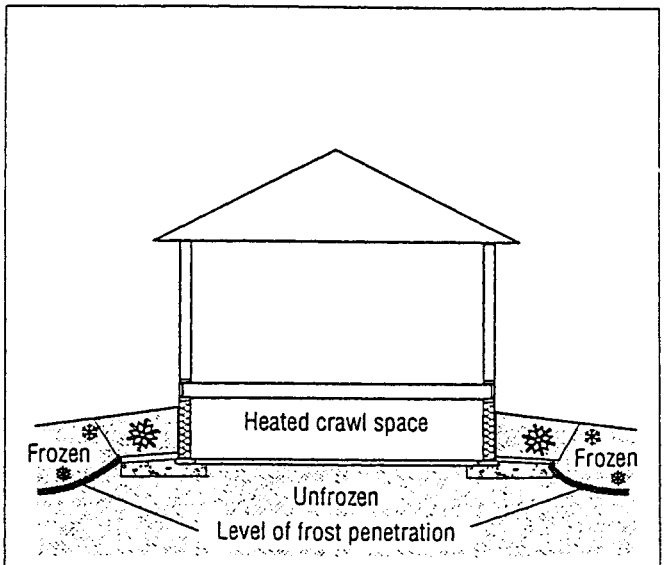

Frost Protection of Footings

2. Design Limitations and Assumptions

The design method used in this booklet is intended to accommodate designs for most geographic regions in Canada. The following limitations to the method must be noted:

- The provisions of CAN3-S406-M, *Construction of Preserved Wood Foundations*, must be followed. Specifically, this standard includes restrictions to:
  - **Part 9 buildings;**
  - **buildings of two storeys or less;**
  - **ground snow loads up to 3 kPa (60 lbs/ft^2); and**
  - **typical house floor loads.**

- Construction will be in **non-permafrost regions** (i.e. regions having an average mean annual temperature greater than 32 °F (0 °C)). Foundation design in permafrost usually includes strategies to keep the ground frozen rather than unfrozen.

- Footing design will take into account the intended structure and any unusual loading conditions. **Soils must have a bearing capacity of 75 kPa (1500 lbs/ft^2) or more.**

It is assumed that such designs are only to be applied in the following ways:

- In residential construction.

- On heated buildings (it will not adequately protect buildings which are unheated for prolonged periods).

- On buildings completed, backfilled and heated before freezing weather comes.

Elements beyond the foundation must comply with local Codes and/or the National Building Code.

Insulation in contact with soil as specified in the design must be Expanded Polystyrene Type II or Extruded Polystyrene Type III or Type IV to resist crushing under anticipated loads in horizontal application.

Builders using the method should note that the insulation levels specified will probably be found to be adequate for floor comfort. The design method assumes the worst case for soil conditions for frost susceptibility and as such, the specified insulation levels may be conservative in some cases.

Proper site grading is required, sloping the finished grade level away from the structure to direct surface water away from the foundation.

Adequate measures must also be taken to avoid damage to the foundation insulation — both during construction and over the expected service life of the assembly — typically by covering the insulation with 12" (300 mm) of backfill.

3. Design Procedure

The design procedure specifies the thickness and width of the horizontal wing of insulation that is to be installed around the perimeter of the foundation wall. It assumes that wall elements are insulated to the extent available within the stud cavity (i.e. a minimum of R 20 (RSI 3.5) will be used).

The procedure further assumes that proper consideration is given to the installation of the air barrier, vapour barrier and fire protection. The thermal resistance and width of the perimeter insulation is specified based on the severity of the climate as indicated by degree days below 18 °C.

Step 1

Select the closest location as listed in **Table 1**, or consult the Ontario Building Code for the degree day rating of your specific location. The rating provides an indication of the severity of the climatic conditions in the vicinity of the site.

City	Degree Days C
Barrie	4575
Big Trout Lake	7699
Brantford	4241
Brockville	4230
Chapleau	6214
Cornwall	4418
Dryden	6087
Gravenhurst	4911
Kenora	5938
Kingston	4251
London	4133
Moosenee	7011
North York	3999
North Bay	4990
Ottawa	4634
Peterborough	4411
Parry Sound	4730
Sudbury	5043
Sioux Lookout	6278
Toronto	3646
Thunder Bay	5673
Wawa	5756
Windsor	3622

Table 1: Degree Day C (Below 18 °C) by Location

Step 2

Consult **Table 2** for the wing width and thickness for the insulation layer that is required to protect the footing. While in warmer parts of Ontario, only a 4' (1.2 m) wing will be required; in more severe climates, the width of the wing might need to extend out 6' (1.8 m) from the foundation perimeter.

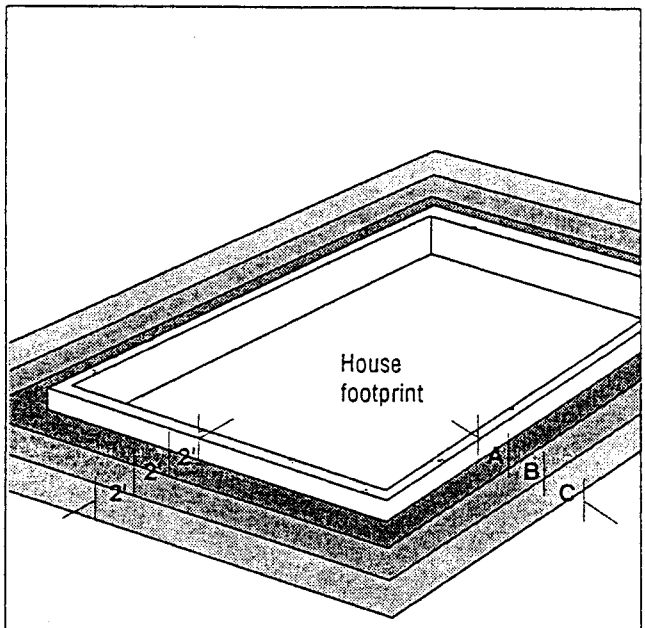

Perimeter Foundation Zones

Degree Days Below 18 °C	Required R (RSI) Value of Insulation by Zone Representing 2' (600 mm)		
	A	B	C
Less than 3800 °C	10 (1.76)		
3800-6000 °C	10 (1.76)	10 (1.76)	
More than 6000 °C	10 (1.76)	10 (1.76)	5.0 (0.88)

Table 2: Determining Required Insulation

This design will produce a foundation wall with a typical cross-section as shown below. Some important design considerations are assumed in this design:

- Footing trenches are sloped to an outflow point (either a sump or exterior drain) and lined with compacted, free-draining material.
- All wood in contact with soil is stamped PWF grade. Nails used to construct the PWF foundation must be hot dipped galvanized.
- All joints in the PWF plywood must be sealed with butyl caulking. Sealed 6 mil polyethylene must extend from the footing to the level of the finished grade and be protected with a PWF plywood strip.
- Diagonal lateral bracing is provided every 4' (1.2 m) to prevent "kick-in" of footing due to soil pressure, if a cast-in-place concrete floor is not provided to serve this purpose.
- The drainage layer on the exterior of the foundation wall is equal to, or better than, two layers of sealed polyethylene. A high density dimpled polyethylene membrane is preferred. All joints must be sealed.
- Joints in the polyethylene vapour barrier are sealed to create an air barrier. The poly must be protected from damage with sheathing.
- A header wrap (non-poly) or other detailing will be used to maintain continuity of the air barrier from the foundation to the main floor walls.
- Heat will be provided to the crawl space area — maintained at a minimum of 60 °F (15 °C).

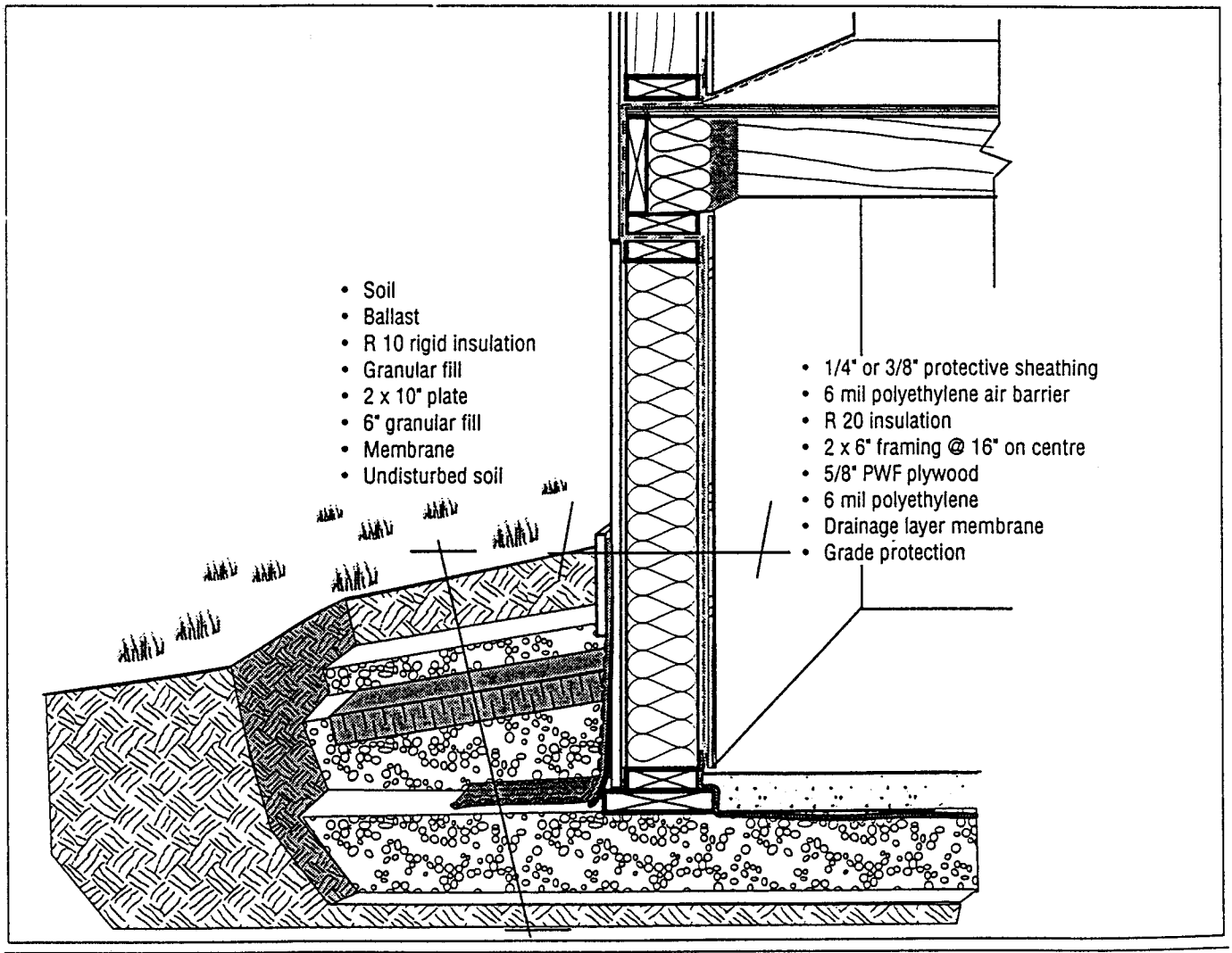

4. Construction Procedures

Having established the key variables associated with the design configuration, construction details are important to consider. The site work can proceed quickly and easily by means of the following steps.

Step 1: Clear the Site and Excavate for Footings

Remove all organic material: topsoil, leaves, trees, roots, etc. This often requires excavation/scraping to a depth of 6-12" (150-200 mm). Excavate trenches for footings — both around the perimeter and as support for centre bearing walls. The trench dimensions should be deep enough to allow for placement of a minimum depth of 6" (150 mm) of clear stone at a minimum width of 20" (500 mm). The area on the exterior of the building immediately adjacent to the footing may also need to be excavated to provide for placement of the insulation around the perimeter.

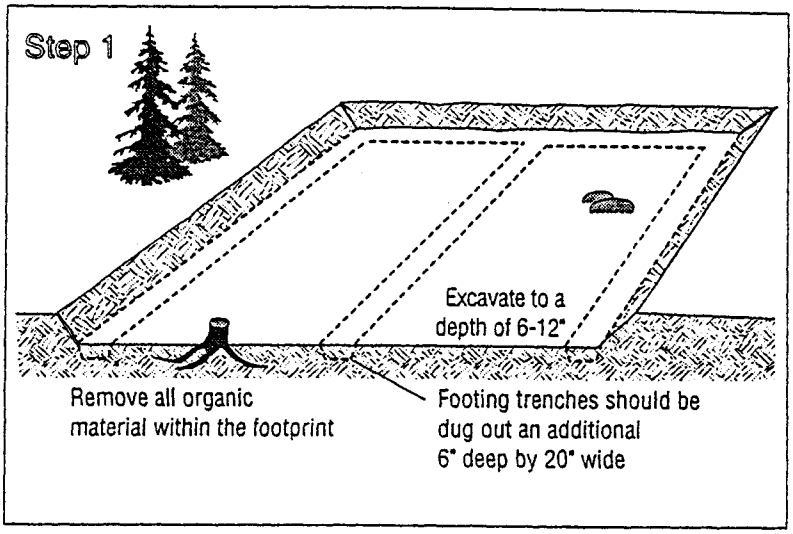

Step 2: Slope Footing Trench to an Outflow Point

The excavated trench should be sloped either to an interior sump or to a point away from the building to ensure the removal of any water from the drainage layer. Ensure that positive drainage is provided. The entire excavation must slope towards the location of the sump or to an exterior outflow point.

To avoid undermining footings, do not use drainage tile or "O" pipe in the trench for additional drainage.

Compact the sub-base as required.

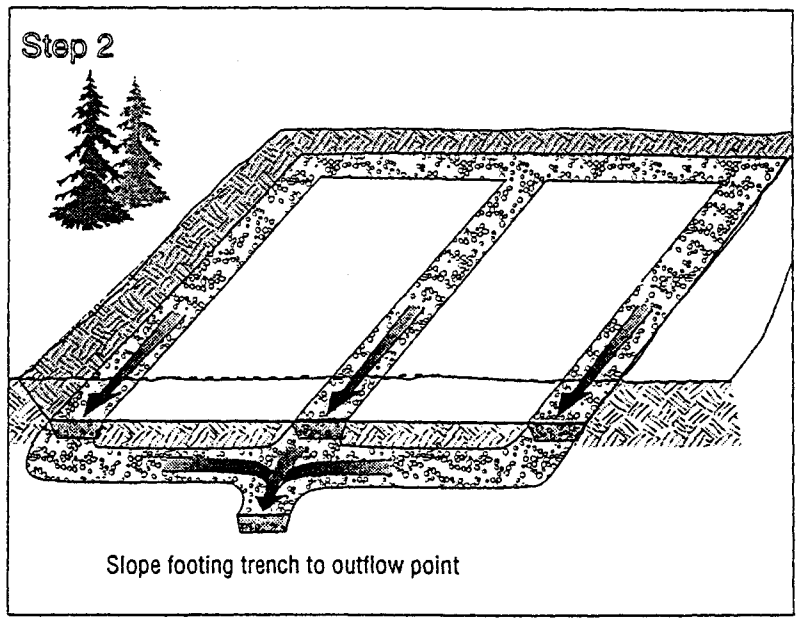

Step 3: Place Stone Drainage Bed

Use a minimum of 6" (150 mm) of 3/4" (19 mm dia.) clear stone in the trench. Compact and level the stone as required.

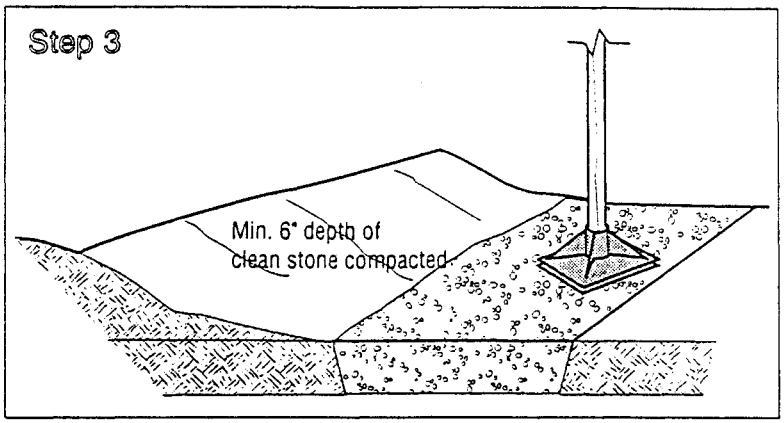

Step 4: Frame Foundation Walls

All exterior walls should be framed with 2 x 6" (38 x 140 mm) PWF lumber at 16" (400 mm) on centre. Footing plates should be 2 x 10" (38 x 240 mm) treated lumber.

Framing 4' (1.2 m) high walls will provide a practical crawl space area while minimizing the need to cut and edge-treat materials. The cut edge of the plywood should be placed above grade.

A 2 x 4" (38 x 89 mm) wall at mid-span of the house may be constructed of untreated lumber provided that 2 x 8" (38 x 184 mm) footing plates are pressure treated and a capillary break (polyethylene) is provided under the non-treated framing.

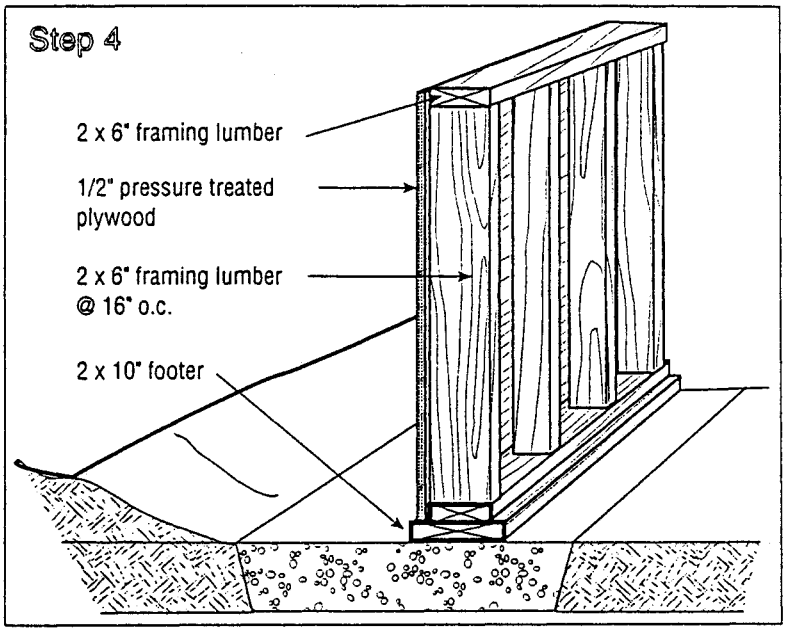

Step 5: Place Drainage Layer Membrane on the Exterior Surface of Foundation Wall

The below grade sections of the wall must be protected against water leakage as required in the CSA standard — sealing joints in the plywood and providing sealed 6 mil polyethylene over the exterior plywood to grade.

An additional level of protection is prescribed in this design. A dimple, air gap membrane drainage layer sheet product (or free-draining exterior insulation) is recommended for optimum performance.

Fasten the top edge of drainage layer at regular intervals as required by the manufacturer. Seal all joints and provide flashing as required at the top edge, at or near grade. Slope the drainage layer to ensure that water in the soil runs away from the footing. Cover and protect the top edge of the poly and drainage layer with a strip of treated plywood.

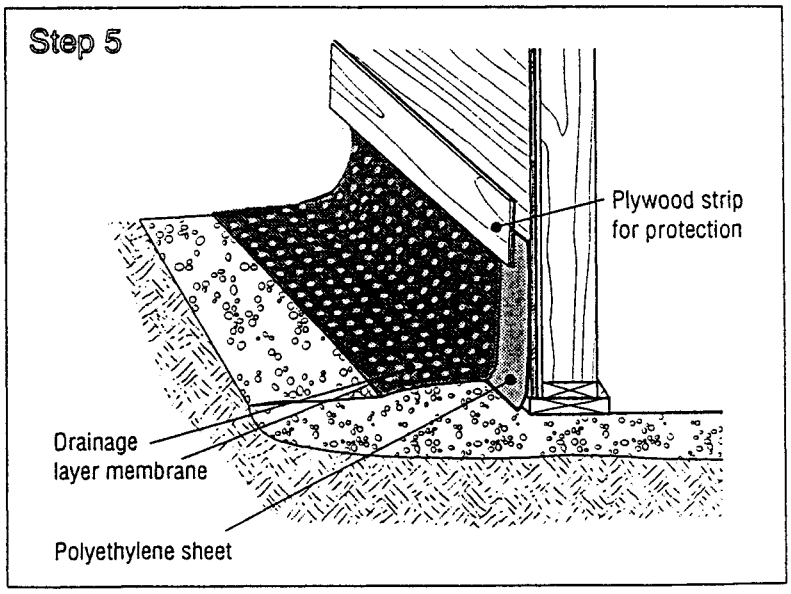

Step 6: Partially Fill and Grade Trench Adjacent to Exterior Walls

Fill the trench with granular fill to create a suitable base for placing the horizontal insulation. A minimum of 4" (100 mm) of free-draining fill should be installed over the drainage layer. The fill should be slightly sloped away from the foundation to ensure that water does not accumulate on the insulation layer but drains away from the building.

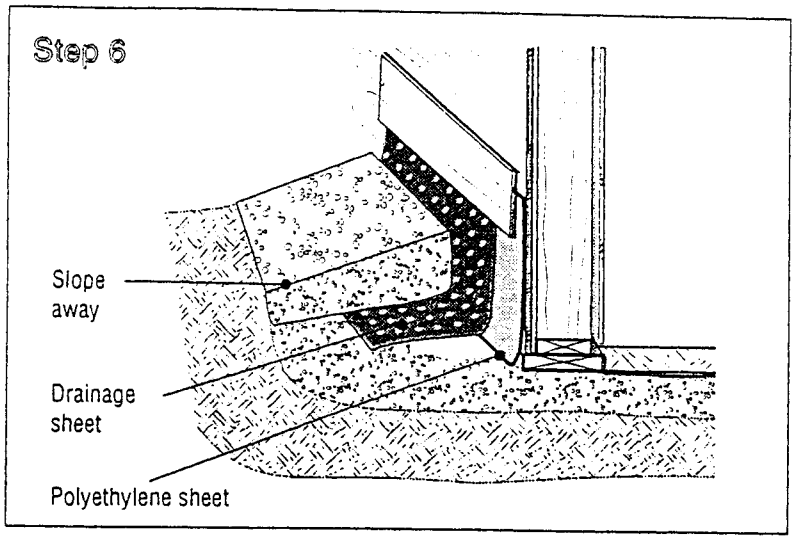

Step 7: Insulate Stud Wall

Fill the wall cavities with R 20 (RSI 3.5) batt insulation. Ensure that all cavities are completely filled with insulation. Minimize the need to compress bats at the edges of the studs and plates.

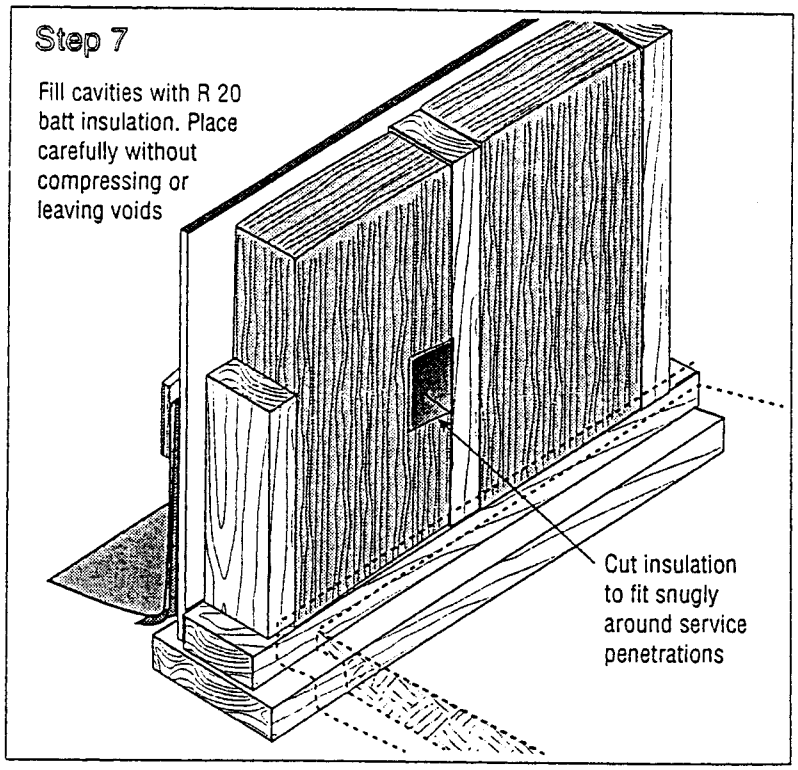

Step 8: Install Air and Vapour Barrier and Ground Cover

Provide a polyethylene air and vapour barrier on the interior face of wall insulation, and on the ground below the crawl space. Seal the joints in the polyethylene on the wall with acoustical caulking. Ensure that joints are located over a solid backing (studs or plates). Seal the poly to a strip of header wrap material laid over the top plate.

Lay polyethylene over the excavated grade. Seams should be overlapped a minimum of 12" (300 mm). The ground cover should be sealed to the wall air barrier to minimize the entry of soil gases. Seal the sheets at the bottom wall plate with acoustical caulking.

Optional insulation can be placed over the ground cover to provide higher levels of energy efficiency and to improve occupant comfort.

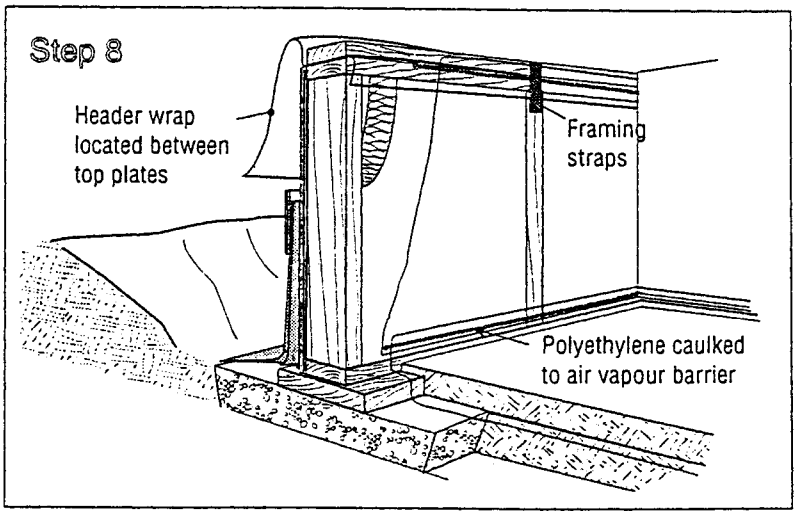

Step 9: *Provide Protection for Air Barrier and Ground Cover*

Protect the interior wall polyethylene with plywood or other sheathing to prevent mechanical damage. Prior to installation of the sheathing, install a sheet of header wrap material between the top plates to ensure continuity of the air barrier at the floor header assembly.

Protect the ground cover (or optional insulation) with a layer of sand to a minimum depth of 2" (50 mm).

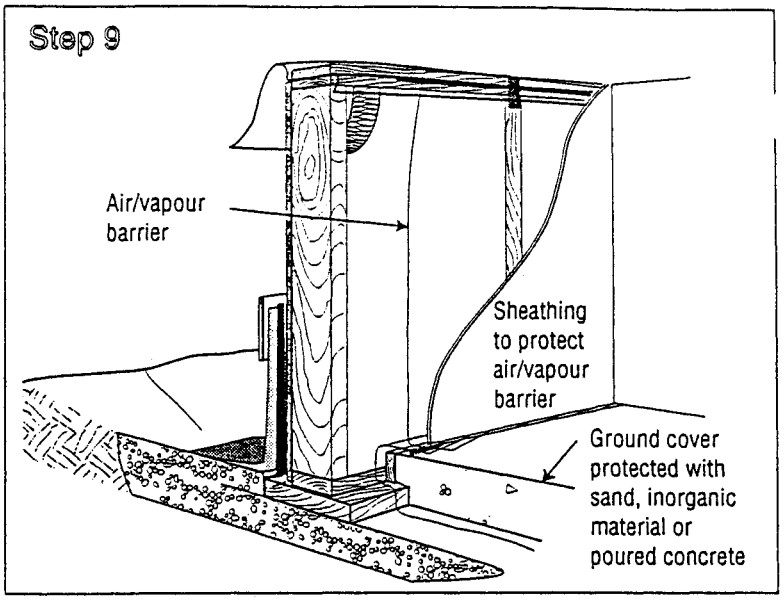

Step 10: *Insulate Horizontal Trench Adjacent to the Building*

Install insulation in the trench adjacent to the building as required by the design. Ensure that there is a slight slope away from the building. Insulation panels should be butted tightly together. Shiplap edge insulation may be used to facilitate this.

Cover the insulation with a minimum of 2" (50 mm) of granular fill and an additional minimum 4" (100 mm) of soil for ballast and protection. Slope the finished grade away from the house at 1/4"/foot (1:50) for 6' (1.8 m). Ensure that when completed, the house is equipped with eavestrough, downspouts and splashblocks to minimize splashing and ponding of water against the foundation walls.

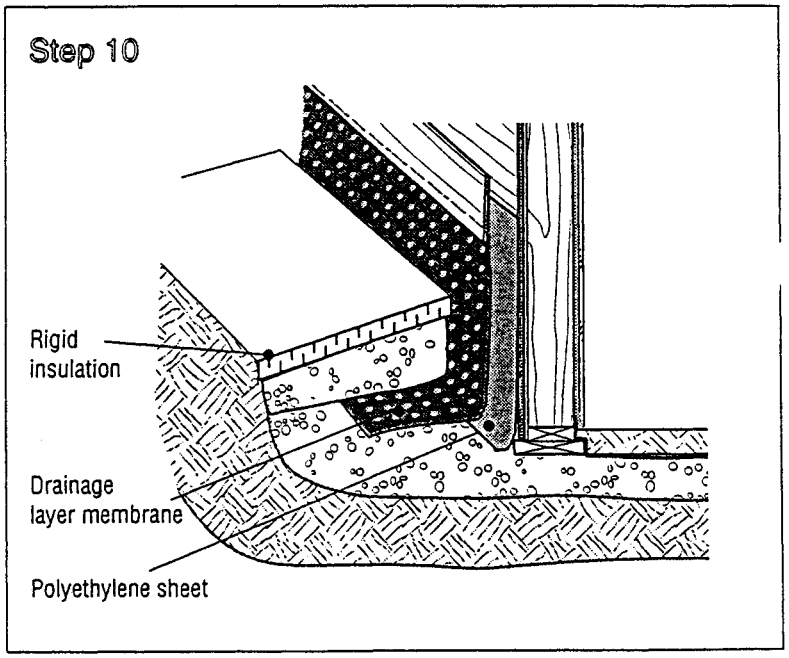

Step 11: Frame the Main Floor

Install the floor framing and subflooring onto the foundation wall using standard practices.

The header assembly should be insulated to a minimum R 20 (RSI 3.5). This can be accomplished by insulating and providing vapour protection in the floor header assembly. Ensure that the header wrap air barrier is wide enough to extend around the header and that it is eventually sealed to the main wall air barrier. Seal the joints between the header wrap and the polyethylene with acoustical caulking.

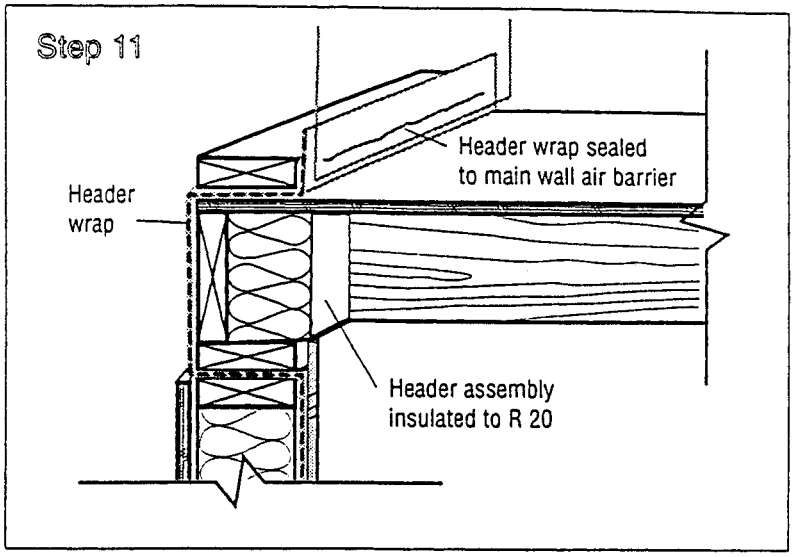

Step 12: Brace Crawl Space Walls to Prevent Lateral Movement of the Footer and Foundation Wall

Bracing is required to prevent the base of the foundation wall from kicking in if not installing a concrete slab or PWF floor. Bracing should be constructed of 2 x 4" (38 x 89 mm) lumber located at 4' (1.2 m) intervals around perimeter walls. Braces should run upward at a 45° angle and tie bottom plates to joists. Where floor joists run parallel to the foundation wall, solid blocking is required to provide additional stiffness.

PWF floors represent an acceptable means of providing resistance to lateral pressures while allowing for a more finished crawl space interior. 2 x 4" (38 x 89 mm) treated studs can be laid over sleepers located at 4' (1.2 m) centres. The joists must be lined up with the wall studs to resist lateral pressures.

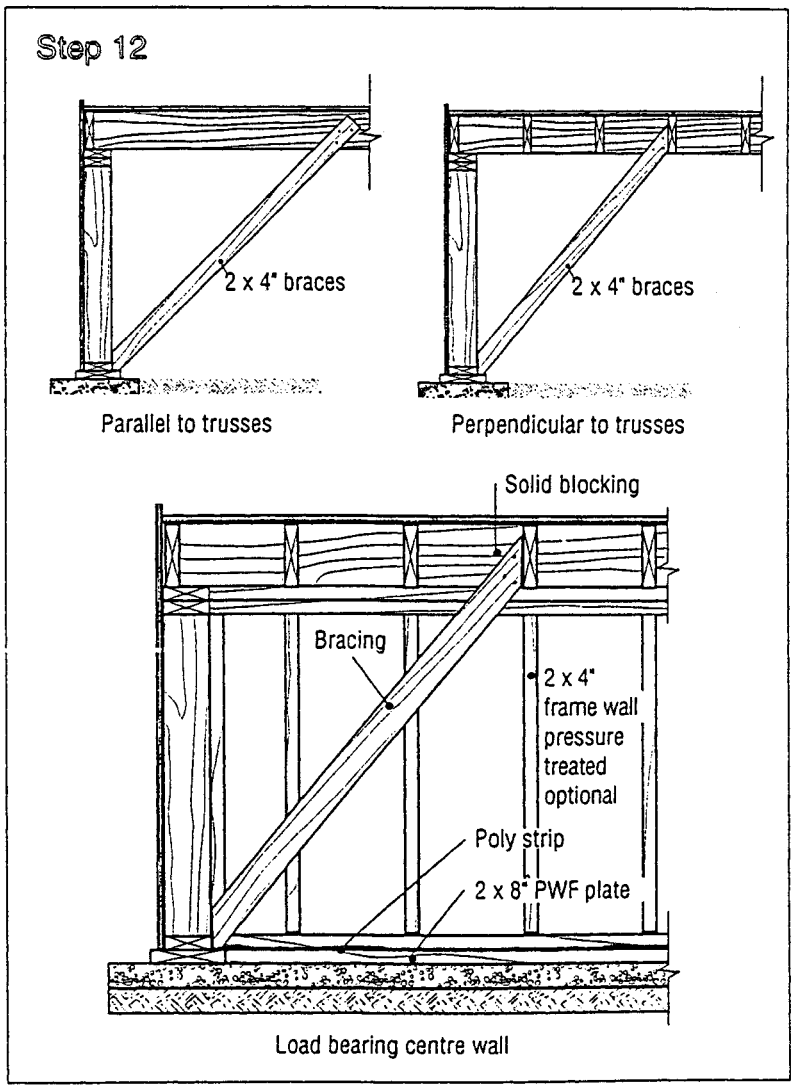

5. References

For further information on specific topics covered in this booklet, consult the following references:

1. National Building Code of Canada, National Research Council of Canada, 1995.

2. Design Guide for Frost-Protected Shallow Foundations, National Association of Home Builders Research Centre, NAHB, 1995.

3. Design of Insulated Foundations, Robinsky, Eli. I. et al, Journal of the Soil Mechanics and Foundation Division, ASCE Vol. 99, No. SM9, Proc. Paper 10009, September, 1973, pp. 649-667.

4. CAN/CSA-S496, Construction of Preserved Wood Foundations, Canadian Standards Association.

5. Permanent Wood Foundations, Canadian Wood Council, 1730 St. Laurent Boulevard, Suite #350, Ottawa, Ontario K1G 5L1