RESEARCH REPORT

Sustainability Considerations Guide for Best Practice Brick Veneer Steel Stud Walls

Canada

CMHC SCHL
HOME TO CANADIANS

CMHC—HOME TO CANADIANS

Canada Mortgage and Housing Corporation (CMHC) has been Canada's national housing agency for over 60 years.

Together with other housing stakeholders, we help ensure that Canada maintains one of the best housing systems in the world. We are committed to helping Canadians access a wide choice of quality, affordable homes, while making vibrant, healthy communities and cities a reality across the country.

For more information, visit our website at www.cmhc.ca

You can also reach us by phone at 1 800 668-2642 or by fax at 1 800 245-9274.
Outside Canada call (613) 748-2003 or fax to (613) 748-2016.

Canada Mortgage and Housing Corporation supports the Government of Canada policy on access to information for people with disabilities. If you wish to obtain this publication in alternative formats, call 1 800 668-2642.

Sustainability Considerations Guide for Best Practice Brick Veneer Steel Stud Walls

Final Report

by

Daniel Pearl, architect (research project director), partner
Bernard Olivier, architect, partner

L'OEUF (L'Office de l'éclectisme urbain et fonctionnel)
Pearl Poddubiuk et associés architectes

with the collaboration of

Dominique Derome, architect and engineer (responsible for hygrothermal analyses)
D Derome conseil

Jan Vrana
Consulting structural engineer (responsible for structural analyses)

CMHC Project Manager: Luis de Miguel, arch.
Policy and Research Division

Ottawa, July 2006

Executive Summary

CMHC's Best Practice Guides both inform the construction industry (architects, engineers, designers, product manufacturers and builders) and encourage higher quality and more durable long term approaches. They have not specifically focused on the challenge of "their" environmental impact. This guide cannot accomplish this in one thrust, but it is the beginning of an ecological sensitization process.

Durability is a cornerstone of sustainable design and as such, assemblies must perform satisfactorily for the intended life of the building with appropriate maintenance. The most sustainable approach to ameliorating BVSS envelope design assemblies is to improve overall energy efficiency and durability while ensuring a healthy environment during all phases of its life cycle.

This report provides guidance relating to building science, structural and buildability issues with a view to maintaining and sometimes improving the performance of BVSS walls while keeping a strong focus on durability, sustainability and the environment.

Sustainability can be considered from both the macro (societal impact) and the micro (project impact) perspective.

- Societal consequences include direct or indirect harm to the regional ecosystem, such as water pollution, air pollution, resource depletion, as well as to the global ecosystem, such as green house gas emissions and depletion of the ozone layer.
- Numerous sources outline their definition of *green building materials,* and this guide does not attempt to redo this work. Direct project consequences related to green building material selection include;
    - envelope durability,
    - indoor air quality,
    - energy loss
    - water pollution
    - embodied energy (including re-use and recycling within their life-cycle).
- Defining green building materials is challenging, but prioritizing their performance with respect to which criteria is *more* important is even more difficult. Often the interests of the direct material application (ie: indoor air quality) takes precedent over larger societal contamination issues (such as the dumping of materials at the end of their life in landfills where their toxic loading in the environment can be way more dramatic).
- In some instances there are products that can be used which, by definition, may not be environmentally sound, but the manner in which they are used may help reduce the overall environmental impact of the building.
- Although this guide does not cover the following dimensions of a building's life cycle, they may impact exterior envelope design decisions; occupancy type (both current and potential future changes), retrofit and deconstruction.

Fourteen large scale details illustrate the practical application of the principles and recommendations of the text. Hygrothermal simulations were performed to validate the soundness of the details.

Synthèse

Les Guides des règles de l'art de la SCHL visent à la fois à informer l'industrie de la construction (architectes, ingénieurs, concepteurs, fabricants de produits et constructeurs) et à favoriser l'adoption de techniques de qualité élevée et durables à longue échéance. Ils n'ont pas spécifiquement porté sur les répercussions d'ordre environnemental. Le Guide en question n'y parvient pas d'un seul coup, mais il marque le début d'un processus de sensibilisation écologique.

La durabilité constitue la pierre angulaire de la conception conforme aux principes du développement durable et à ce titre les ensembles de construction doivent avoir une tenue en service satisfaisante pendant la durée utile prévue du bâtiment soumis à un programme d'entretien tout indiqué. La démarche la plus écologique à adopter pour améliorer les ensembles constitutifs de l'enveloppe des bâtiments à ossature en acier et à placage de brique consiste à accroître la durabilité et l'efficacité énergétique générales tout en conservant un milieu intérieur sain pendant toutes les phases du cycle de vie.

Le présent rapport fournit des orientations touchant la science du bâtiment, la structure et la constructibilité, dans le but de préserver et parfois d'améliorer la performance des murs à ossature en acier à placage de brique, tout en mettant l'accent sur la durabilité, le développement durable et l'environnement.

Le développement durable peut s'envisager selon une perspective d'ensemble (incidence sur la société) ou partielle (incidence du bâtiment).

- Les conséquences sociétales désignent les méfaits causés directement ou indirectement à l'écosystème régional, tels la pollution de l'eau, la pollution de l'air, l'appauvrissement des ressources, de même que l'écosystème mondial, comme les émissions de gaz à effet de serre et la dégradation de la couche d'ozone.
- De nombreuses sources proposent leur définition de *matériaux de construction verts*, mais le présent guide ne tente pas de refaire ce travail. Les conséquences directes de projets liées à la sélection de matériaux de construction verts touchent :
    - la durabilité de l'enveloppe;
    - la qualité de l'air intérieur;
    - la perte d'énergie;
    - la pollution de l'eau;
    - l'énergie de production (y compris la réutilisation et le recyclage des matériaux au cours de leur cycle de vie).
- Définir les matériaux de construction verts constitue un objectif ambitieux, mais établir prioritairement leur performance par rapport aux critères *les plus* importants *se* révèle davantage difficile. Bien souvent les intérêts de la mise en œuvre directe des matériaux (ex. : qualité de l'air intérieur) passent avant les enjeux sociétaux d'envergure en matière de contamination (matériaux acheminés à destination d'une décharge au terme de leur durée utile où les effets toxiques pour l'environnement risquent d'être beaucoup plus sérieux).

- Dans certains cas, l'emploi de produits qui ne sont pas par définition écologiques permet de réduire les répercussions globales du bâtiment sur l'environnement.
- Le guide ne traite pas des aspects suivants du cycle de vie d'un bâtiment, mais ils peuvent influer sur les décisions touchant la conception de l'enveloppe du bâtiment, son usage (tant actuel que futur), ainsi que les travaux de rattrapage et de déconstruction.

Quatorze détails à grande échelle montrent l'application pratique des principes et des recommandations formulés dans le texte. Des simulations hygrothermiques ont été effectuées pour valider le bien-fondé des détails d'exécution.

National Office
700 Montreal Road
Ottawa ON K1A 0P7
Telephone: (613) 748-2000

Bureau national
700 chemin de Montréal
Ottawa ON K1A 0P7
Téléphone : (613) 748-2000

Puisqu'on prévoit une demande restreinte pour ce document de recherche, seul le résumé a été traduit.

La SCHL fera traduire le document si la demande le justifie.

Pour nous aider à déterminer si la demande justifie que ce rapport soit traduit en français, veuillez remplir la partie ci-dessous et la retourner à l'adresse suivante :

Centre canadien de documentation sur l'habitation
Société canadienne d'hypothèques et de logement
700, chemin Montréal, bureau C1-200
Ottawa (Ontario)
K1A 0P7

Titre du rapport: _____

_____

Je préférerais que ce rapport soit disponible en français.

NOM _____

ADRESSE_____
rue App.

_____
ville province Code postal

No de téléphone ( ) _____

1 Table of contents

1.1 Introduction to sustainable best practice principles

CMHC's Best Practice Guides are published to both inform the construction industry (architects, engineers, designers, product manufacturers and builders) and encourage higher quality and more durable long term approaches. They have not specifically focused on the challenge of "their" environmental impact. This guide cannot accomplish this in one thrust, but it is the beginning of an ecological sensitization process.

Durability is a cornerstone of sustainable design and as such, assemblies must perform satisfactorily for the intended life of the building with appropriate maintenance. As mentioned in previous best practice guides, it is essential for architects to address the following durability issues when detailing:

- Thermal protection
- Air barrier design
- Water vapour control
- Water management

Durability is greatly affected by water, both from outside and inside. Condensation can initiate corrosion, rot and mould. It may occur by diffusion on surfaces that are at or below the dew point. This potential for condensation can be calculated and in practice the volume of water condensation by air exfiltration is found to be about 100 times bigger than condensation that occurs by diffusion (the issue of condensation potential due to vapor diffusion has been exaggerated or at least misunderstood, compared with the real and much more serious volume of water condensation due to air exfiltration and hence the need for a highly effective air barrier). Nevertheless, this guide evaluates numerous scenarios for how much insulation can be placed on the warm side of the wall assembly without inducing condensation, including evaluating the need (and type) of a vapor retarder on the warm side of the assembly. Section 2.1 further expands upon this theme.

IDP (INTEGRATED DESIGN PROCESS) includes the exploring of green design approaches for building orientation and mass configuration to minimize heating, cooling, and lighting requirements right from the outset. This process includes numerous analyses such as fenestration strategies in conjunction with thermal mass and natural daylighting, by many consultants, at the earliest design stage as possible. IDP promotes first incorporating as many passive principles as possible with the addition of active strategies where appropriate. Similar to IDP for overall building design, this guide will address a checklist for sustainable best practice detailing. Here too promoting approaches which consider short and long term risk management, cost, availability of trades people, capacity to repair without having to completely dismantle and re-assemble is fundamental to improving durability, air quality, and life cycle costing.

The topics below are set up to consider sustainability from both the macro (societal impact) and the micro (project impact) perspective.

- Societal consequences include direct or indirect harm to the regional ecosystem, such as water pollution, air pollution, resource depletion, as well as to the global ecosystem, such as green house gas emissions and depletion of the ozone layer.
- In recent years numerous sources outline their definition of *green building materials,* and this guide does not attempt to redo this work, however several publications are listed in the annex which specifically address this question. In summary, direct project consequences related to green building material selection include;
    - envelope durability,
    - indoor air quality,
    - energy loss
    - water pollution
    - embodied energy (including re-use and recycling within their life-cycle).
- Defining green building materials is challenging, but prioritizing their performance with respect to which criteria is *more* important is even more difficult. Often the interests of the direct material application (ie: indoor air quality) takes precedent over larger societal contamination issues (such as the dumping of materials at the end of their life in landfills where their toxic loading in the environment can be way more dramatic).
- In some instances there are products that can be used which, by definition, may not be environmentally sound, but the manner in which they are used may help reduce the overall environmental impact of the building. As an example, re-using a particular window which previously released various toxins during its fabrication but is now stable and can easily be upgraded with new energy efficient glazing, can prove to be significantly more environmentally responsible than throwing away the entire window. This evaluation process is still cumbersome at the moment, but common sense can dictate the right strategy in many circumstances. Continuing on, this same window can become even more advantageous if it is re-installed with a sun blocker on a southern exposure where it can benefit from winter solar gains while blocking summer sun. Finally, if the window's installation can ensure minimal thermal bridging, alignment with its neighboring wall insulation and easy access for both repairs and eventual dismantling for future re-use or recycling, the window frame alone is considerably less important than the overall wall opening's specifications.
- Although this guide does not cover the following dimensions of a building's life cycle, they may impact exterior envelope design decisions; occupancy type (both current and potential future changes), retrofit and deconstruction. Re-using existing materials has the following potential benefits; reduced embodied energy (with respect to *resource-extraction and manufacturing impact)*, low or zero off-gassing, and reduction of waste disposal.

2 Checklist for Designing Sustainable Best Practices BVSS Envelope assemblies

The most sustainable approach to ameliorating BVSS envelope design assemblies is to improve overall energy efficiency and durability while ensuring a healthy environment during all phases of its life cycle. Improving thermal performance for an envelope's full expected life span is quite critical as it is costly to attempt to do so after initial construction (for long life BVSS envelopes this could be 50 to 99 years according to CSA standard S478-95: Guideline on Durability in Buildings). From an energy cost perspective, current incremental costs for increasing minimum envelope energy code standards by thirty percent can be recuperated in less than ten years (this represents in less than 20% per cent of its life cycle), and this rule of thumb will improve over time as energy costs continue to surpass inflation rates for the foreseeable future. For this statement to be valid and economically realistic, durability, safety and health issues must be fully integrated within energy efficiency design upgrades.

This section expands upon a series of overall strategies and issues and the following section 3, proposes a series of best practice details which incorporate many of these principles, with specific comments that relate to each proposed set of details.

Items to Consider in Designing BVSS Envelope Assemblies	
SUBJECT:	NOTES:
Thermal Protection:	• Location within the wall assembly, cost, thermal performance, space available (including structural ramifications), toxicity, embodied energy and life cycle considerations
Air Movement Control:	• Location within the wall assembly (especially with respect to its protection and structural movement), cost, toxicity, embodied energy, verification and repairs, installation during harsh weather conditions and life cycle considerations
Water Vapour Control:	• Location within the all assembly and in relation to thermal insulation (especially with respect to its duplication where trapped humidity cannot adequately dry out in certain circumstances and the resultant mold growth risk can lead to complete premature failure)
Water Management:	• Location both outside and within the all assembly, cost (as related to flashing installations), aesthetics (as related to exterior flashing details)

2.1 Building envelope performance

The control of thermal conductivity, air, water vapour and water movement discussed individually below, must be designed together. Their components' location, toxicity, durability, costs, stability, ease of verification, maintenance, removal for re-use or recycling and replacement are all part of the decision-making risk management process. Contract documents require different labeling for each strategy even if the same component is serving more than one purpose (this is important for both sub-trades and site supervision (including verification protocols).

In order to meet energy standards in many parts of Canada[1], the amount of insulation required in the wall assembly needs to be significantly larger than shown in CHMC's previous BVSS Best Practice Guide.

2.1.1 Thermal insulation

Thermal insulation plays a critical role in reducing greenhouse gas emissions over the long term. Its location within the wall assembly is also Important by ensuring the durability of the envelope through shielding the steel stud component from structural and corrosive deterioration and related health risks. The challenge is thus related to how much and where to place insulation. Section 3 introduces two themes; Details A, where all of the insulation is located to the exterior of the interior steel stud backup wall, and details B, where insulation is located both within as well as outside the interior steel stud backup wall. Detail C is a variant of A, where the slab edge protrudes beyond the steel stud wall assembly.

> Details A: Insulation outside, costs more and there are less insulation types available, is difficult to replace without removing the exterior brick veneer, but also has some advantages in that contaminants are less problematic for occupants, most thermal bridging is eliminated, and condensation risks to the overall wall assembly are minimized if sufficient drying strategies are incorporated. If more than 100 mm (4 inches of insulation) is specified in this scenario, (which is infrequent, specialized masonry anchors and lintel supports are required. Although not standard products, masonry anchors can be ordered to hold up to 150 mm (6 inches of insulation), depending on the building context and structural loading conditions (including building height, seismic zone and windloading).
>
> Details B: Insulation both outside and inside increases the risk of condensation, the presence of contaminants that could effect occupants and thermal bridging, but ease of monitoring and replacement, enabling more overall insulation without increasing the overall wall section thickness and enabling more insulation types at lower costs provides some other benefits.

Life cycle considerations for all insulation types include; raw material acquisition (including use of recycled content), manufacturing, usage phase, indoor air quality

---

[1] Provincial standards and corresponding envelope performance criteria to be verified and discussed in relation with the *Model National Energy Code for Buildings*.

issues, removal, re-use, end-of life disposal, and recyclability. Other performance issues include thermal resistance per thickness, fire resistance, acoustical qualities, air movement control, ease of installation, quantity of water used during installation, adhesion and stability over at least a twenty-five year time-span.[2]

2.1.2 Air movement control

With respect to durability and energy efficiency, Control of air movement, as required by the National Building Code of Canada (NBCC), is essential to all wall assemblies. As shown in previous studies[4], the control of air leakage is more critical in the management of water condensation than vapor diffusion, however how to achieve this and at what cost is further discussed in Section 3 assemblies. Although numerous layers of air barriers can be cumulative, specifying a designated *"air barrier system"* is essential for the builder and sub-trades as well as for inspecting site installations and field testing. There are four requirements for a successful air barrier system as outlined in NBCC Section 5.4; airtightness, continuity, structural integrity and durability. Negative impacts that can be attributed to building envelope air leakage include; damage to building components, significant increases to heating and cooling loads with direct consequences on GHGs (greenhouse gas emissions), and increased health risks through the inlet of dust and pollutants and the wetting of materials (See *Guidelines for Delivering Effective Air Barrier Systems* for more information)[4]. Strict control of air movement can also lead to the entrapment of health contaminants, and several wall assembly designs rely on vapor permeable air barriers to dry out of wet components to both the inside and outside (depending on the geographic context and the specific environmental factors) [3,5]. Sustainable design practice now involves the participation of all consultants during the initial envelope design stage and this is of particular importance when buildings incorporate larger mechanical systems or hybrid ventilation strategies.

Applied air barriers installed on the warm side of the insulation but outside of the sheathing layer, act as air barriers in most cases, although in some cases sprayed insulation systems may perform or be designated as part of the *"air barrier system".* As well, in some cases air barrier materials may also act as vapor retarders, however the importance of the air barrier component versus that of the vapor retarder role, is significantly higher from both an energy and water vapour control perspective. Specific care has been taken to label air barrier membranes in details in section 3 assemblies, and a separate note in the accompanying text (under water vapour control) clarifies the water vapour control system.

Monitoring and testing of air barrier systems during their installation has shown to be one of the most effective ways of increasing air movement control[4].

2.1.3 Water Vapour control

Vapor retarders have traditionally been installed on the inside of wall assemblies in Canada (which is almost exclusively a cold or very cold climate), and although this satisfactorily controls the quantity of interior moisture-laden air moving outwards, it can impede the drying out of wet assemblies inward[3]. Many of our envelope installations occur in winter and rainy seasons where wall assemblies are significantly wetted before

---

[2] BuildingGreen article 2005

[3] **Understanding Vapor Barriers** by Joseph W. Lstiburek.

they are closed in (in many cases it is too expensive or difficult to fully protect the assembly throughout construction). Although this report is not meant to reintroduce new research that has already been adequately covered in other studies (such as Joseph W. Lstiburek's article on "*Understanding Vapor Barriers"*[3]), envelope designers must give more importance to non-ideal conditionas and risk management issues with respect to the drying out of wetted materials in the exterior envelope. Although the Canadian National Building code (CNBC) requires vapor retarders, the CNBC does not currently require hygrothermal verification for building envelopes. In an effort to better clarify the terminology of vapor retarders different classes of vapor resistance were created. Assemblies can only be modeled with respect to ideal conditions (which is the case for details presented in Section 3 and the accompanying hygrothermal analyses).

2.1.4 Water Management

Similar to water entering the exterior envelope by way of air leakage, water management control, is fundamental to ensuring that materials used in the external envelope do not pre-maturely fail or result in the stimulation of mold and mildew growth. As shown in previous studies[4], the management of water outside of the steel stud wall assembly through deflection and drainage is critical to the long term durability of the entire exterior envelope. Numerous strategies exist to provide adequate water control[5] (such as drained cavity walls and pressure equalized rainscreen walls), and the environmental conditions of each context must be evaluated as part of the overall risk management strategy.

2.2 Structural issues

2.2.1 Steel stud wall

An informal survey of current construction sites indicated that the most basic elements of the best practice guide are often omitted from designs. A more explicit division of design responsibility between the architect, the structural engineer and the light steel framing supplier, along the lines of the CSSBI recommendations, would improve resulting designs. For instance, structural analysis of the masonry tie attachment shows that this criterion may govern thicker gauges for the studs rather than strength or deflection criteria. Thus the design of studs and masonry ties will necessitate coordination between light steel framing supplier, masonry tie supplier, architect and structural engineer.

With respect to corrosion of steel components of the stud wall assembly, including fasteners and masonry ties which cross the air barrier and sheathing, should be given specific attention since the durability of the overall assembly can be compromised by the premature failure of any of these components.

2.2.2 Parapets

Parapets should be supported laterally. The designers should avoid trying to hold the parapets with the brackets. The reason is that parapets are exposed to large reversals in

---

[4] **Guidelines for Delivering Effective Air Barrier Systems** by Kevin D. Knight. Bryan J. Boyle.

[5] **Keeping Walls Dry** by Dale Kerr.

pressures and the brackets and welds would have to be designed for fatigue. Such brackets might be too large, closely spaced and impractical.

2.3 Toxicity

2.3.1 Toxicity related to fabrication and installation

Building standards that address the reduction or elimination of VOCs (volatile organic compounds) and odorous materials during the fabrication and installation of building materials are sporadic and vary with each component. Industry in general is improving on a voluntary basis (encouragement from rating systems and indirectly from marketing efforts) although LCA (life cycle analysis) is a very expensive and complex tool which evaluates toxicity of building materials throughout their entire life-cycle.

2.3.2 Toxicity in Occupied Buildings

Most studies concentrate on the reduction or elimination of VOCs (volatile organic compounds) and odorous materials when specifying indoor materials and finishes. Clearly building materials which have low or no volatile organic compounds (VOCs) and are low odor (or, better yet, odor-free) are preferable[6]. Designers and scientists have paid less attention to the toxicity of materials within the wall section because they have been assumed to be trapped behind the vapour retarder and wall finish. With increased building airtightness and in specific, improved air barrier systems, more toxins from building envelope materials will probably enter the interior environment over time. Designers must consider the potential long term effects of using highly toxic materials even though there are not enough studies clarifying what the measured effects are or will be in the future.

2.3.3 Toxicity of materials as building waste

Many buildings constructed before the 1980s are relatively easy to dismantle, source and re-use or recycle in some way or another (except for specific documented problems such as asbestos use). Today's exterior envelopes will not be as easy to dismantle, source and re-use or recycle in the future given the complex chemical and physical make-up of contemporary building materials and their installation techniques. This has lead to a new area of design research – designing for dismantling (this subject is further discussed in section 2.6.1).

---

[6] **VOCs and Odors: Key Factors in Selecting "Green" Building Materials** by Catherine Coombs.

2.4 Material Concept Development

Design for Environment Guide, sponsored by Industrial Research Assistance Program (IRAP), outlines a new material concept development; optimizing your product's performance by balancing functional, economic and environmental elements. The Strategy Wheel begins with new product concepts, and covers design, materials selection, production, distribution, reduced impact during product use, and the optimization of end of life systems[7]

2.5 Durability

The CSA guideline standard, *S478-95 (2001) on Durability in Buildings*, directly addresses one of the most important issues with respect to "design service life", that of exterior walls. This guideline defines **Durability for building components** as follows: *"the ability of a building component to perform its required function in its service environment over a period of time without unforeseen cost for maintenance or repair".*

The CSA guideline standard, *S478-95 (2001) on Durability in Buildings,* goes on to describe the following design considerations to assure long-term durability;

- **Limiting innovative technologies** to those that can be evaluated by sufficient modeling or testing that ensures the likelihood of a high level of success in application,
- **Material selection** should be cognizant of adjacent incompatibilities (see section 2.5.2), their appropriateness for their environment and be compatible with anticipated differential movements,
- **Detailing** should provide clear, concise and complete drawings and specifications,
- **The design concept must be realistic** – it must be buildable to achieve the necessary level of quality,
- **The design must allow for ease of access** for inspections, testing, maintenance, repair, and replacement of components and assemblies.

2.5.1 Material dismantling, re-use and recycling

Designers must consider not just the first use of material components in wall assemblies, but they need to be aware of their eventual second or multiple-life use in order to ease the dismantling and future re-use of such components (for example; masonry units require mortar with sufficient lime content to ease their eventual dismantling for either repair or re-use).

The evaluation and approval process (and its expense) is the most limiting factor to wide-scale industry re-use (specifically when legal warrantees, with respect to standard approvals are required). Continuing with the brick example, a laboratory is required to retest recuperated brick before it is allowed to be re-used.

---

[7] **Design for Environment Guide**, sponsored by Industrial Research Assistance Program (IRAP), http://dfe-sce.nrc-cnrc.gc.ca/dfestra/intro_e.html

2.5.2 Compatibility

Adjacent "incompatible building materials" can result in material deterioration and shorter service life and even system failure in some circumstances.[8] Designers have been aware of certain incompatible building materials for a long time (for example, dissimilar metals resulting in accelerated corrosion), however a new generation of materials are leading to new combinations of incompatible chemical formulations that are not well known by designers and specifiers. Physical incompatibilities occur when materials react differently to temperature while chemical incompatibilities occur when adjacent materials react chemically.

3 Proposed best practice details for sustainability

3.1 General

In order to meet energy standards in many parts of Canada[9], the amount of insulation required in the wall assembly needs to be significantly larger than shown in current CHMC Best Practice Guides.

Although previous sections describe environmental component ameliorations for the BVSS assembly, improving the overall energy efficiency and long term durability are at the core of this best practice guide, and they are categorized into two basic detailing strategies:

A. Increasing insulation outside of backup steel stud assembly;

B. Increasing insulation both within and outside steel stud assembly.

We have organized and labeled our details following the order established in the current *Best Practice Guide*:

- Detail 1 – slab edge detail
- Detail 4 – Window at u/s slab detail
- Detail 5 – Window jamb detail
- Detail 6 – Slab edge at foundation wall
- Detail 7 – Roof Parapet

The choice of insulation materials is separate from the actual details, although the details show a variety of combinations. The comparison of insulation materials, from a general as well as sustainability standpoint, is separate and can be found on page 9.

3.2 Shelf angle support

---

[8] **Incompatible Building Materials** CMHC publication by J.F. Burrows Consulting, June 2003.

[9] Provincial standards and corresponding envelope performance criteria to be verified and discussed in relation with the *National Model Energy Code for Buildings*.

3.2.1 General

Connecting brackets between the slab anchor plate and angles for brick support can have various shapes. While it is possible to design the size and spacing for almost any condition there are some features that affect efficiency and even reliability.

In buildings with balconies, lintels should be added at every slab (even within the first 11 meters) to avoid cracking at balconies.

3.2.2 Welding

Since welding is mostly performed at the site, the quality control tends to be lower and there is some advantage in providing extra length of weld in areas of concentration of tensile forces. For this purpose WT or HSS brackets have an advantage of having a horizontal edge at the top of the section (tension edge) that provides enough length for extra welding for sufficient safety factors.

3.2.3 Additional considerations

Normally the maximum spacing of brackets could be governed by the size of the angle. It is a good idea to assume that if one bracket is defective the angle has to span double the spacing. For this reason it is recommended that the stresses in brackets be kept low.

Also, thermal expansion and contraction of the angles and masonry may create reverse transversal stresses in welds. Filet welds are not very resistant to fatigue and it is recommended to keep low stresses in welds as well. So, where normally 6 mm filet weld would be sufficient, the designer should use, for example, 8 mm welds.

Thermal deformations and their effect on brackets can be controlled by limiting the length of continuous angles. Generally the expansion joints in angles should match the joints in the masonry.

3.2.4 Detail 1/S : Shelf angle support: Masonry flashing

This detail is an enlargement of detail 1/A or 1/B.

All drawing details does not include drainage material since often they simply displace the problems related to mortar droppings instead of eliminating them. Designers should specify mortar free installation requirements with site verification.

3.2.4.1 Thermal Insulation

Continuity of the insulation behind the shelf angle may be made difficult by the limited spacing between the shelf angle and the slab edge. In some cases, use of a sprayed insulation may facilitate the continuity of the insulation.

The increased distance of the brick veneer from the building structure requires longer brackets between the slab edge and the shelf angle. Drawing 1/S shows a more conventional vertical HSS section, however several alternative structural solutions are proposed for these brackets (shown in drawings 2/S to 5/S).

3.2.4.2 Air Movement Control

Control of air movement is assured by a continuous air barrier membrane.

3.2.4.3 Water Vapour Control

Water vapour control can be achieved by either the continuous air barrier membrane or by an approved water vapour control interior paint finish (depending on environmental context).

3.2.4.4 Water Management

The masonry flashing must divert any water entering the wall cavity. To minimize water leaking through this barrier, the flashing is installed over the air barrier membrane sheet from below and under the next sheet above, respecting the shingle principle.

We have suggested installing a bent sheet steel support under the membrane flashing:

- to provide continuous support for the flexible membrane flashing, for positive drainage slope and easier sealing between membrane sheets;
- to provide a fire closure to compartmentalize the wall cavity. This is required in some cases where combustible insulation material is specified.

A stainless steel drip is installed at the edge of the shelf angle to prevent cavity water from seeping through the weep holes and falling on the top brick of the veneer below. With respect to durability, often water vapour control fails before major envelope components (such as window units or brick veneers) so care must be taken to ensure that the water vapour control system last at least as long as its adjacent major components.

3.2.4.5 Notes

The gap between the shelf angle and the veneer below is sized based on calculated structural deflection and sealant properties.

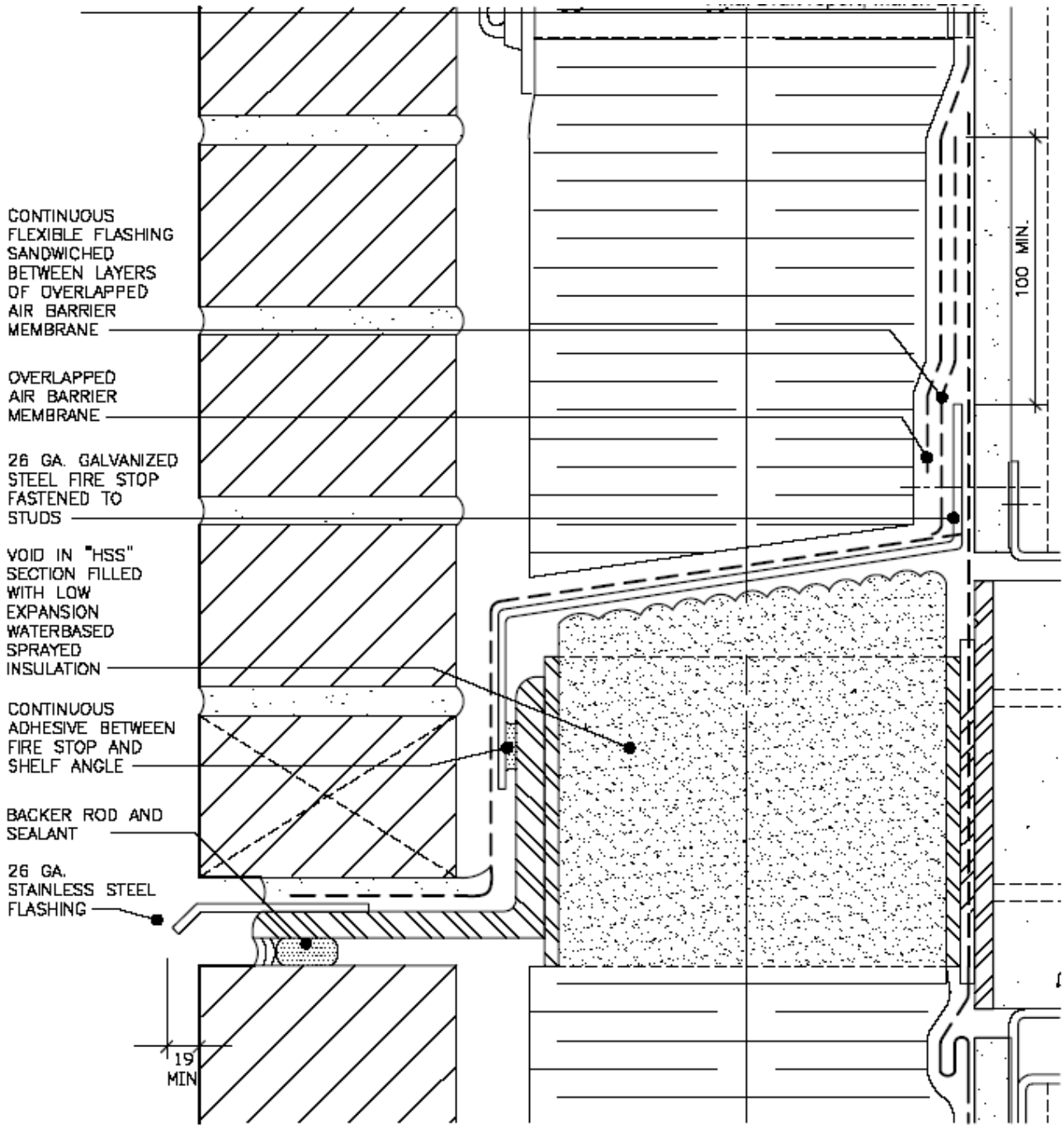

1 S MASONRY FLASHING DETAIL

SCALE: 1 : 2

NOTE : CONSULT LOCAL CONSTRUCTION CODES FOR SPECIFIC REQUIREMENTS.

3.2.5 Detail 2/S : Shelf angle support : welded T section

The T section can be cut on site to allow for construction tolerances.

The horizontal flange at the top provides a longer surface for welding on the tension side. Drawing 2/S shows an HSS vertical spacer being replaced by a steel WT section, perpendicular to the slab edge. The section can be cut on site to adjust for construction tolerances. The section is then welded to the shelf angle and anchor plates set in the concrete slab edge. The top surface of the section allows a long, easily accessible weld to resist the bending moment. To avoid stagnant water resting on the top surface of the WT section, we have proposed installing the section with a 5 degree slope.

The absence of voids facilitates insulation between the slab edge and shelf angle. The horizontal flange can also function as support for the insulation board.

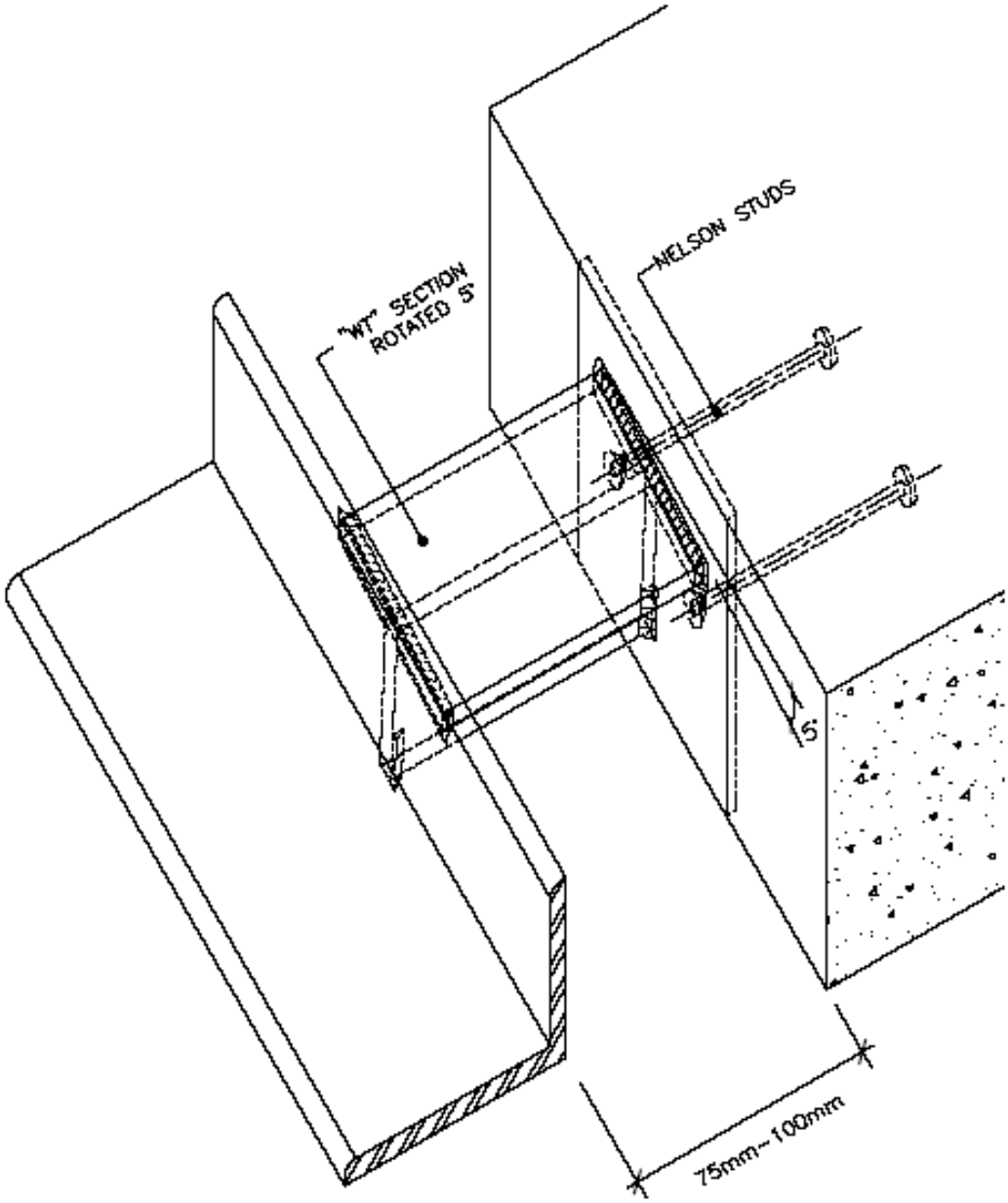

2 S VARIANT WELDED "T" SECTION DETAIL

NOTE : CONSULT LOCAL CONSTRUCTION CODES FOR SPECIFIC REQUIREMENTS.

3.2.6 Detail 3/S : Shelf angle support : welded plate section detail

Normally sustained dead loads are not expected to change sufficiently to exceed typical safety factors. However, under special circumstances, such as seismic activity there could be local overloads that are more difficult to capture in the design.

For typical structural components in seismic zones the designer generally tries to avoid thin (class 4) plates. The main reason is that once such plates fail, they lose their capacity. The load is then transferred to neighboring brackets that get overloaded and fail too. This condition is known as progressive collapse.

Thicker plates may yield when overloaded but they still carry most of the load. As a result only a relatively small force is transferred to neighboring brackets.

So, it would be prudent to avoid using class 4 sections in seismic zones 2 and up. WT sections are efficient for wider gaps in seismic zones.

The lower part of the bracket carries compression that is directly related to the slenderness of the plates. Thinner plates fail in local buckling (often classified as class 4) and thicker plates fail in yielding. While it is possible to design the brackets for the desired loads, analysis of the conditions deserves extra caution.

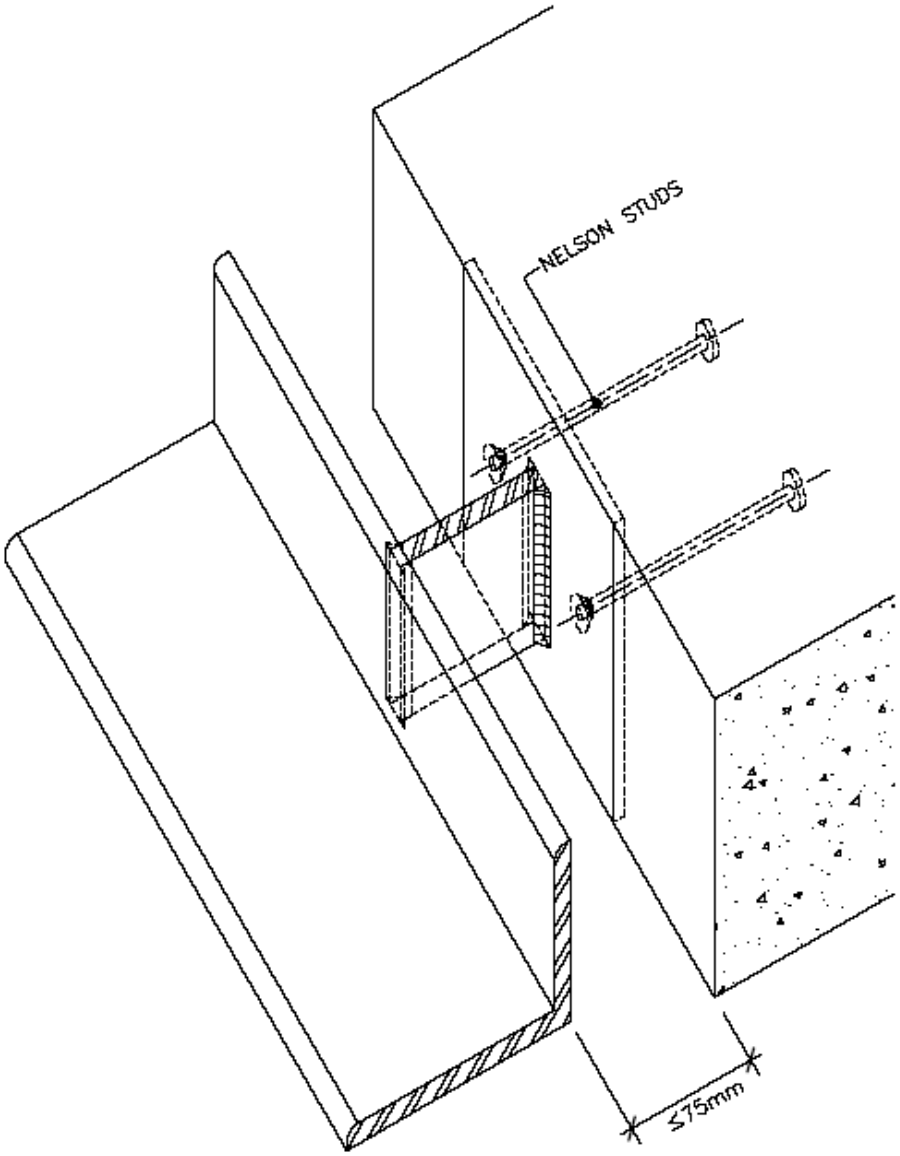

3 S

VARIANT WELDED PLATE SECTION DETAIL

SCALE: 1 : 4

NC

3.2.7 Detail 4/S : Shelf angle support : welded structural hollow section

The use of vertical sections of HSS welded between the shelf angle and the slab edge is probably the most common solution. It easily allows locating the shelf angle at different heights, including below or above the slab edge. The void in the section makes insulation more difficult and may result in greater thermal bridges than alternative solutions.

Position adjustment of the shelf angle relative to the slab edge is made using shim plates.

Using HSS sections allow combining this method of shelf angle support with bracing of the roof parapet, as shown in detail 7/A.

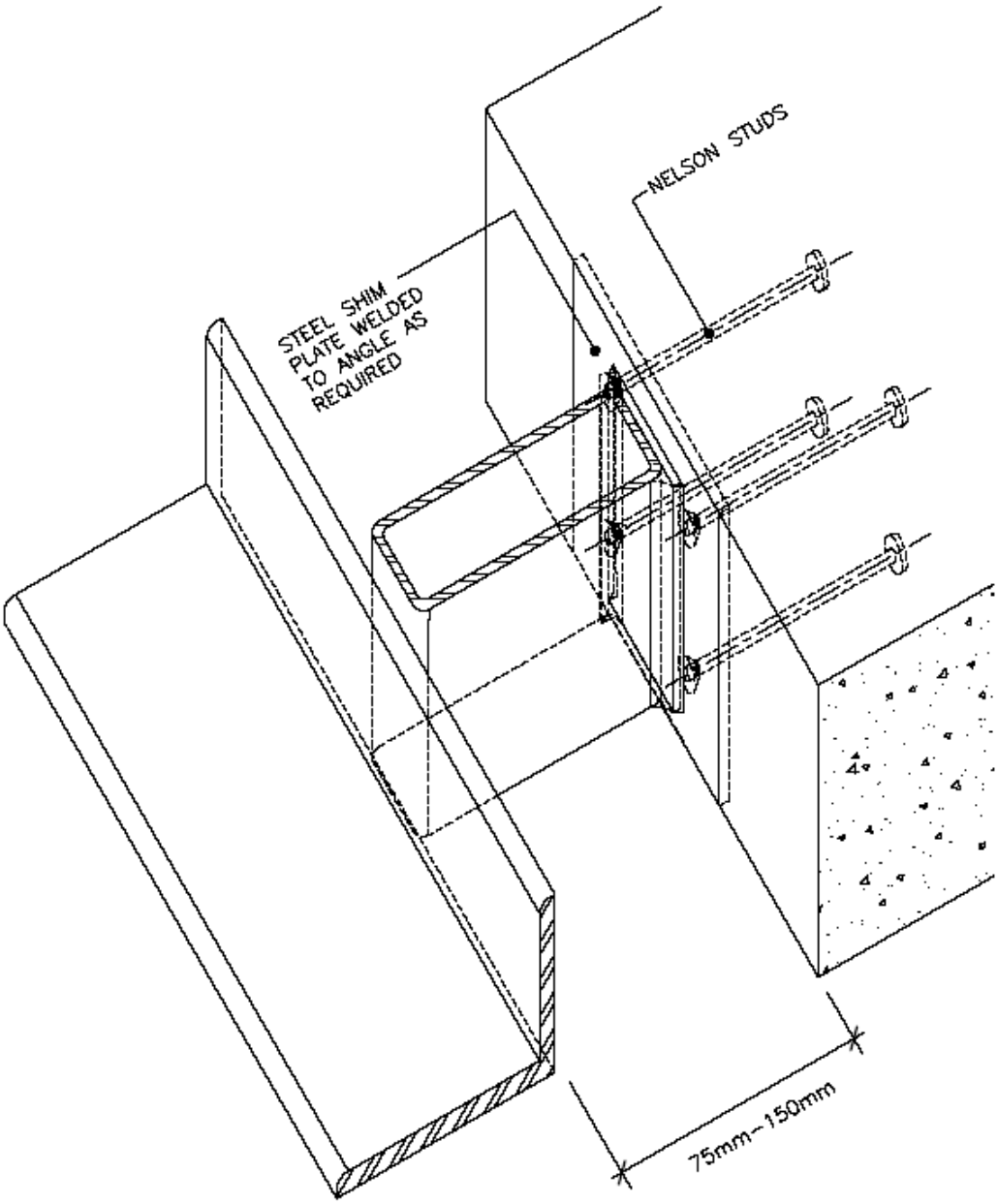

4 S VARIANT WELDED "HSS" SECTION DETAIL

NOTE : CONSULT LOCAL CONSTRUCTION CODES FOR SPECIFIC REQUIREMENTS.

3.2.8 Detail 5/S : Shelf angle support : bolted bracket

As an alternative to a site welded connection between the shelf angle and the concrete slab, a mechanical connection can be used. A manufacturer supplies a standard prefabricated bracket illustrated in the detail.

The bracket is anchored to the concrete slab using an expansion or chemical anchor. A slotted hole allows for adjustment in the plane of the wall. Perpendicular adjustment can be achieved using shims or by varying the bracket depth.

This method does not require site welds or galvanization touch up. Adjustment to the shelf angle position can be performed by the mason during installation of the brick veneer.

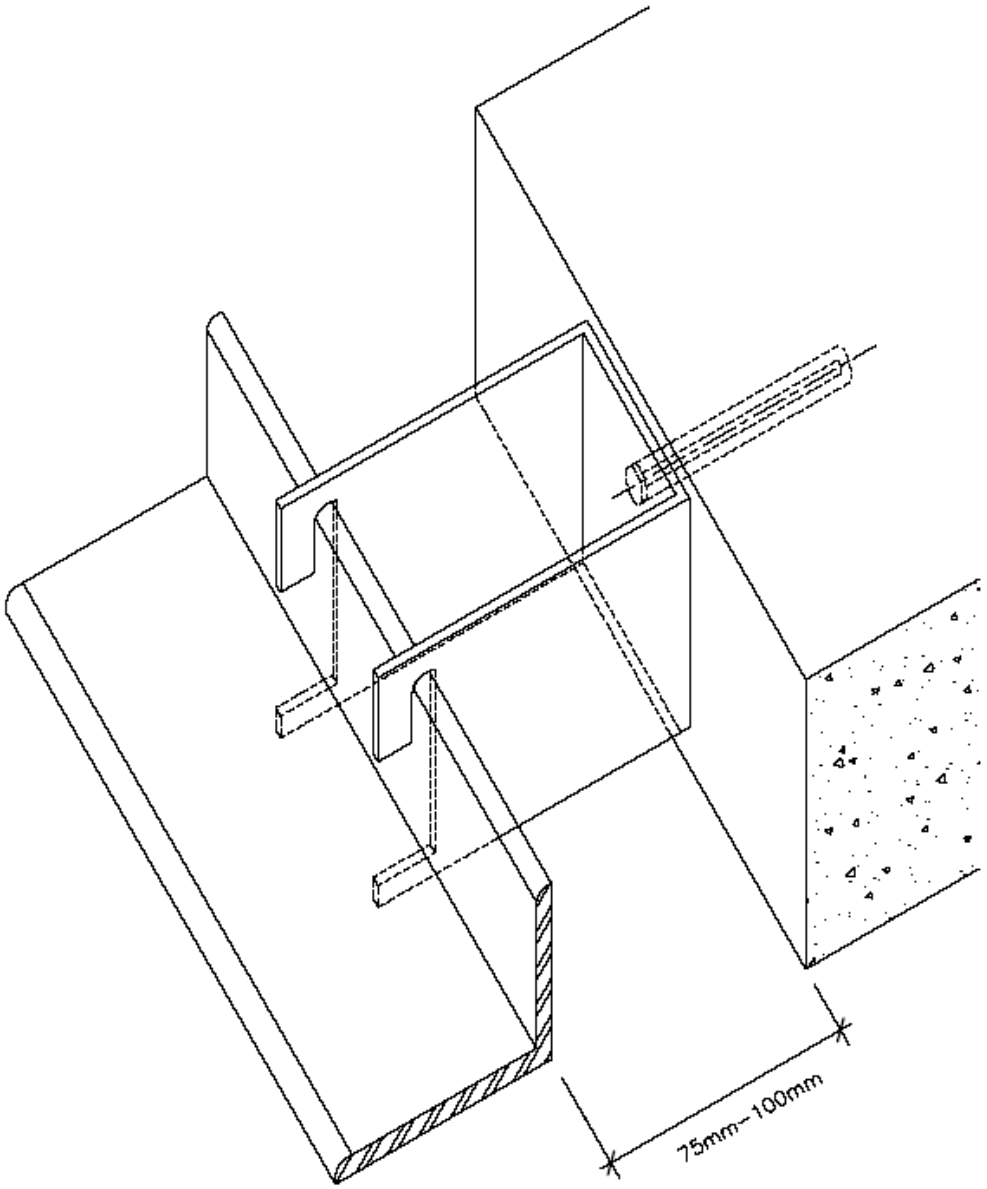

5 S

VARIANT BOLTED BRACKET DETAIL

NOTE : CONSULT LOCAL CONSTRUCTION CODES FOR SPECIFIC REQUIREMENTS.

3.3 Strategy A: increased insulation outside of sheathing

In order to meet energy standards in many parts of Canada[10], the amount of insulation required in the wall assembly needs to be significantly larger than shown in current CHMC Best Practice Guides. In strategy A, we study placing the entire insulation on the exterior of the steel stud assembly. This strategy remains closest to current Best Practice Guide Details.

We have studied variations on this strategy, based on the type and amount of exterior insulation required.

3.3.1 Thermal Insulation

The increased insulation improves energy efficiency to meet requirements of most Canadian locations.

The full insulation thickness is continuous across structural elements, minimizing thermal bridging, heat loss and potential condensation problems.

Insulation is located in one location. It can be installed in a single operation. In the case of sprayed insulation with adequate permeance, both insulation and air barrier systems are realized in one operation.

The additional insulation thickness may require more elaborate attachment techniques. In the case of porous insulation materials, wetting of the insulation may deform or displace improperly attached insulation.

Masonry ties are available with retaining plates for insulation, combining both functions in one component. This type of attachment is more appropriate for semi-rigid insulation.

3.3.2 Air Movement Control

The air barrier is located on the warm side of the entire insulation, minimizing condensation risks.

Both air barrier and insulation are located out of reach of interior construction, building services and activities, reducing needs for coordination and risks of later damage.

Air barrier and insulation materials are separated from the interior environment, reducing the occupants' exposure to VOCs emitted by these materials. Air barrier systems in particular often use solvents.

3.3.3 Water Vapour Control

The air and vapor barrier is located on the warm side of the entire insulation, minimizing condensation risks.

Both air barrier and insulation are located out of reach of interior construction, building services and activities, reducing needs for coordination and risks of later damage.

Air barrier and insulation materials are separated from the interior environment, reducing the occupants' exposure to VOCs emitted by these materials. Air barrier systems in particular often use solvents.

---

[10] Provincial standards and corresponding envelope performance criteria to be verified and discussed in relation with the *National Model Energy Code for Buildings*.

The dew point is within the drainage cavity, and this limits the potential for mould growth on the warm side.

3.3.4 Water Management

The insulation is located entirely within the drainage cavity, where there is more risk of exposure to water. Certain types of water permeable insulation could accumulate water vapour and lose some or most of its thermal resistance.

3.3.4 Notes

This strategy is well known in current practice and does not require new techniques.

The larger distance between brick facing and the building structure increases the bending stresses at shelf angle supports. This could increase costs and require better workmanship and quality control. The previous section addressed the technical structural implications.

The larger distance also requires higher performance from masonry ties: compressive wind loads could create higher bending stresses on misaligned or bent ties or on attachments between the ties and steel studs or even on the studs themselves.

Occasionally, exterior wall overall thickness is increased reducing interior usable space.

The desired air space between the exterior brick and exterior insulation is at least 25 mm and 50 mm is thought to be better. Although more than 25 mm is advantageous in reducing risks related to water moving from the masonry to the exterior insulation, it also requires an approved fire separation between each vertical storey.

3.3.5 Detail 1/A: Slab edge

In this strategy, the composition of the system does not differ from the current Best Practice Guide for the steel stud assembly and interior finish. The only new consideration is related to the additional strength required for the masonry tie attachments to the studs, which may dictate a thicker stud gauge than otherwise needed based on deflections.

Some incidental wetting is always a possibility, therefore, a moisture resistant board is recommended as sheathing.

Masonry ties are currently under review. In particular the two main categories: ties screwed to the face of the stud, generally through the sheathing and ties attached to the stud web. Our sources to date indicate that while web attached ties are structurally superior, sufficient structural resistance should be reliably achieved with face attached ties, if properly designed and tested to take into account the tie fixed part, the fasteners used for attachment, the stud gauge, and the intermediary sheathing panel.

Since of the masonry ties are longer resulting in corresponding larger stresses, the structural properties of the sheathing panels take on a greater importance for the long-term performance of the lateral restraint of the brick veneer.

The National Building Code (2005) references CSA Standard A-370-04 Connectors for Masonry For requirements pertaining to loads acting on connectors, see CSA S304.1 and CSA A371 for the requirements pertaining to installation of masonry connectors.

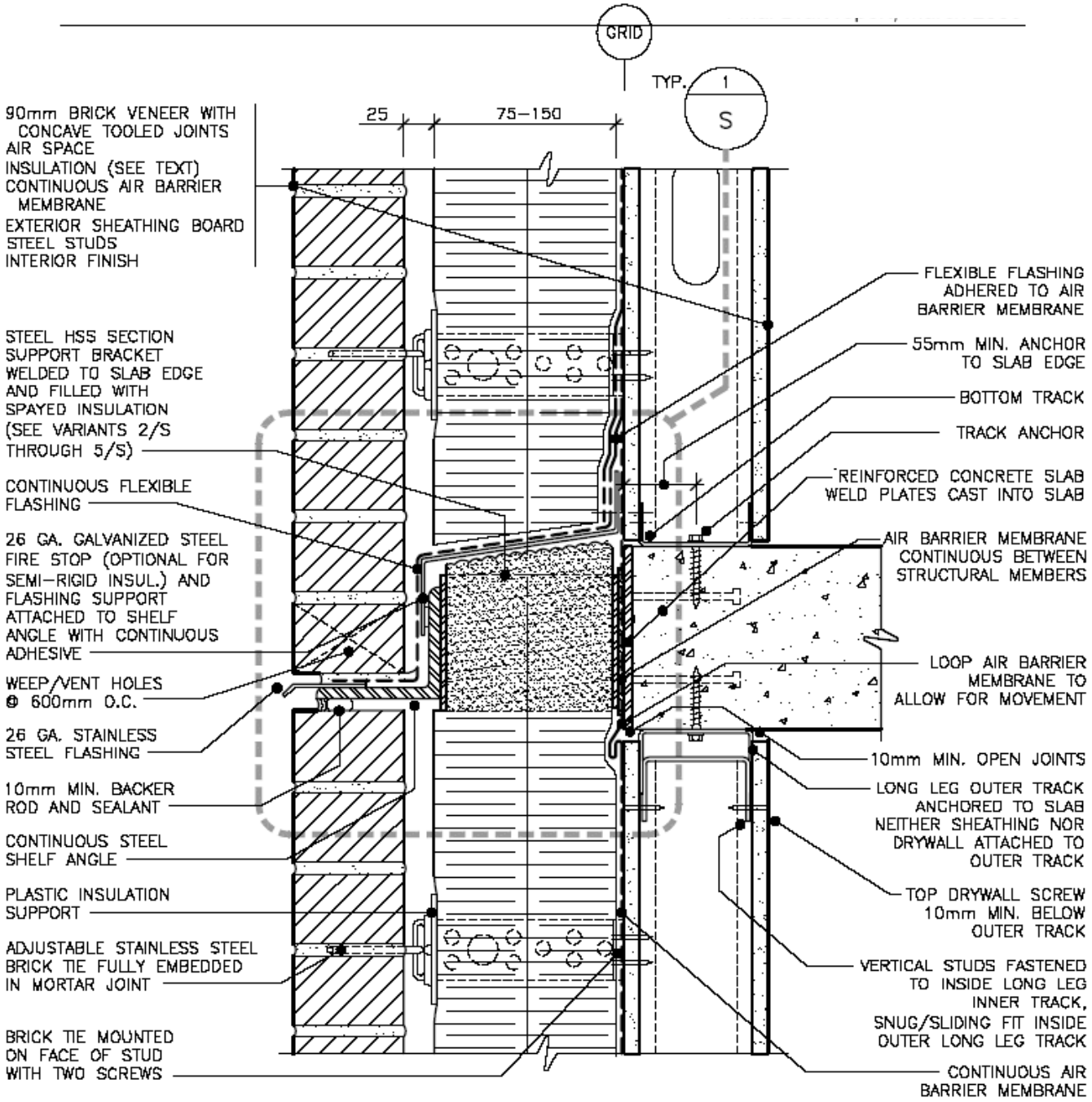

1/A SLAB EDGE DETAIL

NOTE : CONSULT LOCAL CONSTRUCTION CODES FOR SPECIFIC REQUIREMENTS.

3.3.7 Details 4.1/A and 4.2/A: Window at u/s slab

3.3.7.1 Thermal Insulation

The center plane of the insulated glazing unit should be located within the thickness of the wall insulation to reduce thermal bridging at the window frame.

3.3.7.2 Air Movement Control

The seal around the window varies between variants 4.1 and 4.2.

Option 4.1 is difficult to construct while assuring air tightness compared to detail 4.2, and the air barrier system becomes even more challenging when the window is significantly cantilevered in order to align the glazing unit with the exterior insulation to avoid thermal bridging.Also see further notes below (section 3.3.7.5).

3.3.7.3 Water Vapour Control

Water vapour control can be achieved by either the continuous air barrier membrane or by an approved water vapour control interior paint finish (depending on environmental context).

3.3.7.4 Water Management

Interior window sills should use materials which do not support mould growth. This location is subject to condensation caused by the lower thermal resistance of the window frame relative to the wall assembly and to water infiltration, especially with operable windows.

3.3.7.5 Notes

Detail 4.1/A illustrates the use of metal clips to anchor the window frame to the wall assembly. This technique uses less material and does not expose biodegradable materials to the exterior cavity. Lateral stability of the window frame, in the plane of the exterior wall, may be less effective, and thus this approach may be inadequate for large openings. Here the air retarder is married to the sprayed insulation to create a reliable air seal.

Detail 4.2/A illustrates the use of a rough opening box made plywood. This method is commonly used both for its ease of installation and the support it provides to the air barrier system. It facilitates the seal around the window and provides positive lateral bracing for the window. It does use more materials and the plywood may be exposed to condensation and water infiltration damage in the long term. There is a risk of the plywood getting wet and not being able to dry out if it is surrounded by the air barrier. This detail shows the wrapping of the air barrier as close as possible to the inner wall surface so as to protect any biodegradable materials from being directly exposed to water and water vapour and potential long term mould growth while still attempting to be open enough to dry out if the plywood is moistened. The window's thermal qualities and its installation are critical to reducing this risk. A weakness of this approach is the introduction of a petroleum-based air / vapor retarder to the most inner warm side of the wall assembly, and there may be some VOC exposure from this product.

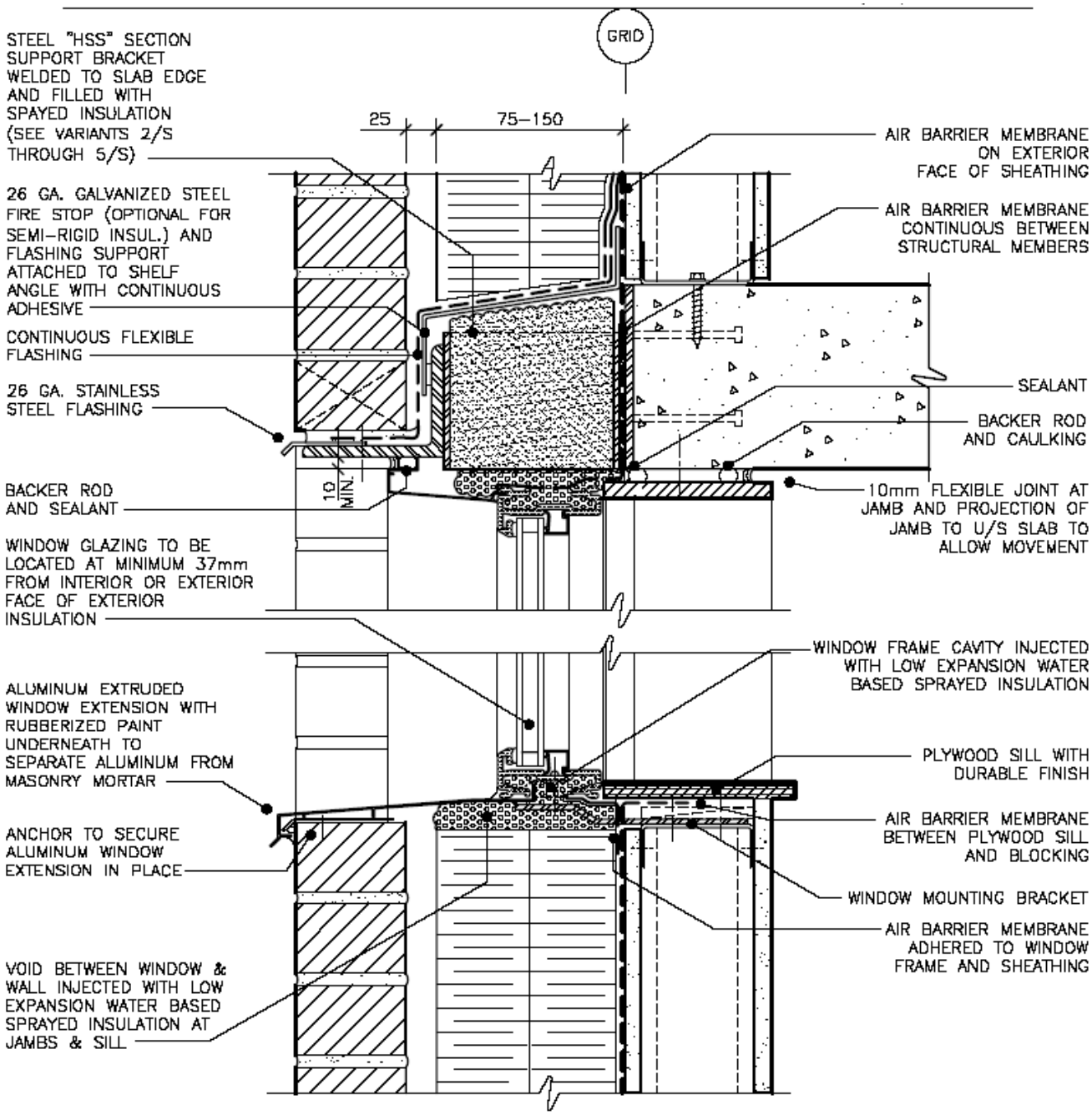

4.1 A

WINDOW AT U/S SLAB DETAIL

NOTE : CONSULT LOCAL CONSTRUCTION CODES FOR SPECIFIC REQUIREMENTS.

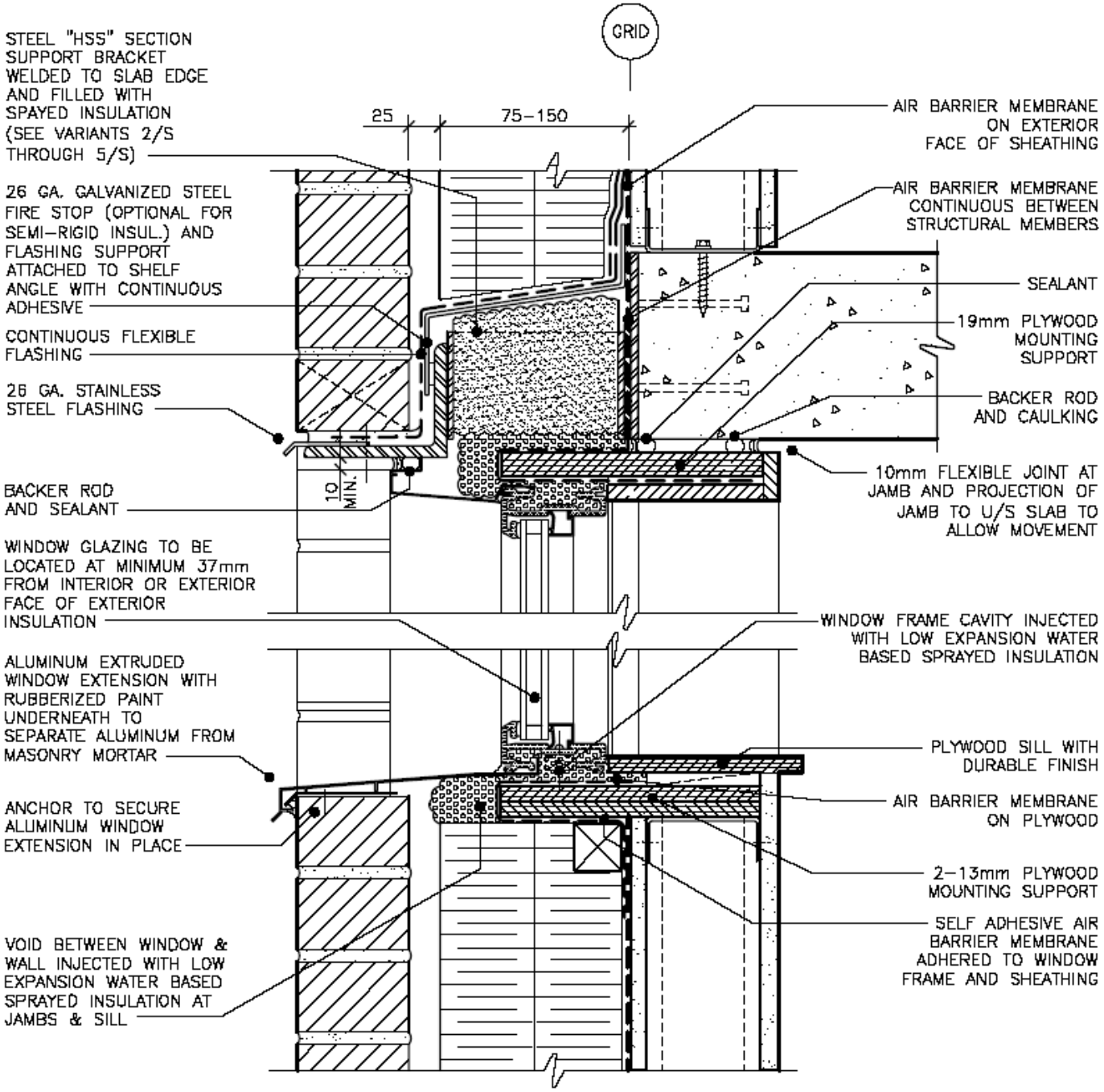

4.2 A

WINDOW AT U/S SLAB DETAIL

NOTE : CONSULT LOCAL CONSTRUCTION CODES FOR SPECIFIC REQUIREMENTS.

3.3.8 Detail 5.1/A and 5.2/A: Window jamb

3.3.8.1 Thermal Insulation

See notes related to detail 4.1/A

3.3.8.2 Air Movement Control

Option 5.1 is difficult to construct while assuring air tightness compared to detail 5.2, and the air barrier system becomes even more challenging when the window is significantly cantilevered in order to align the glazing unit with the exterior insulation to avoid thermal bridging. Also see further notes below (section 3.3.7.5).

3.3.8.3 Water Vapour Control

See notes related to detail 4.1/A

3.3.8.4 Water Management

See notes related to detail 4.1/A

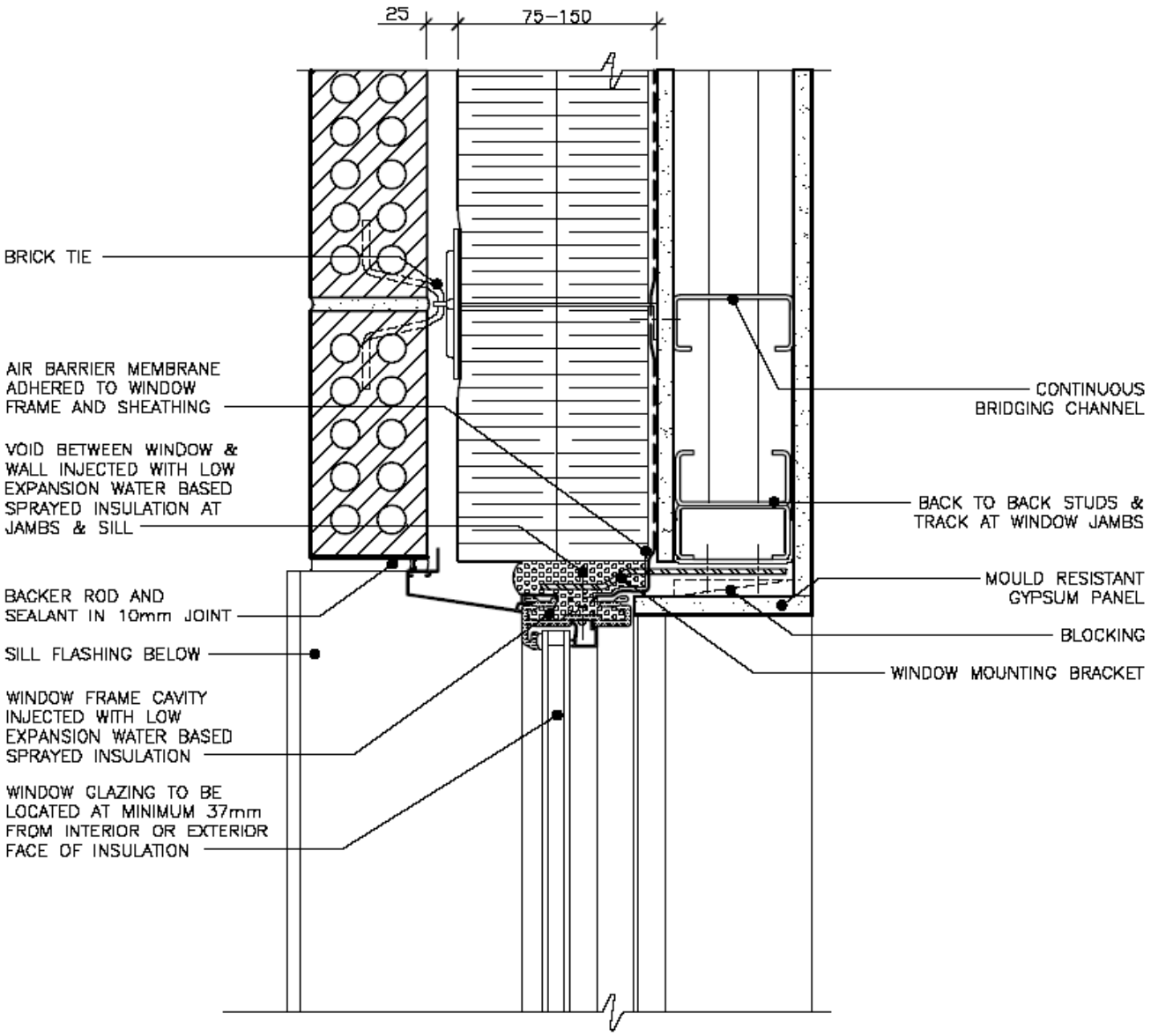

5.1 A WINDOW JAMB DETAIL

NOTE : CONSULT LOCAL CONSTRUCTION CODES FOR SPECIFIC REQUIREMENTS.

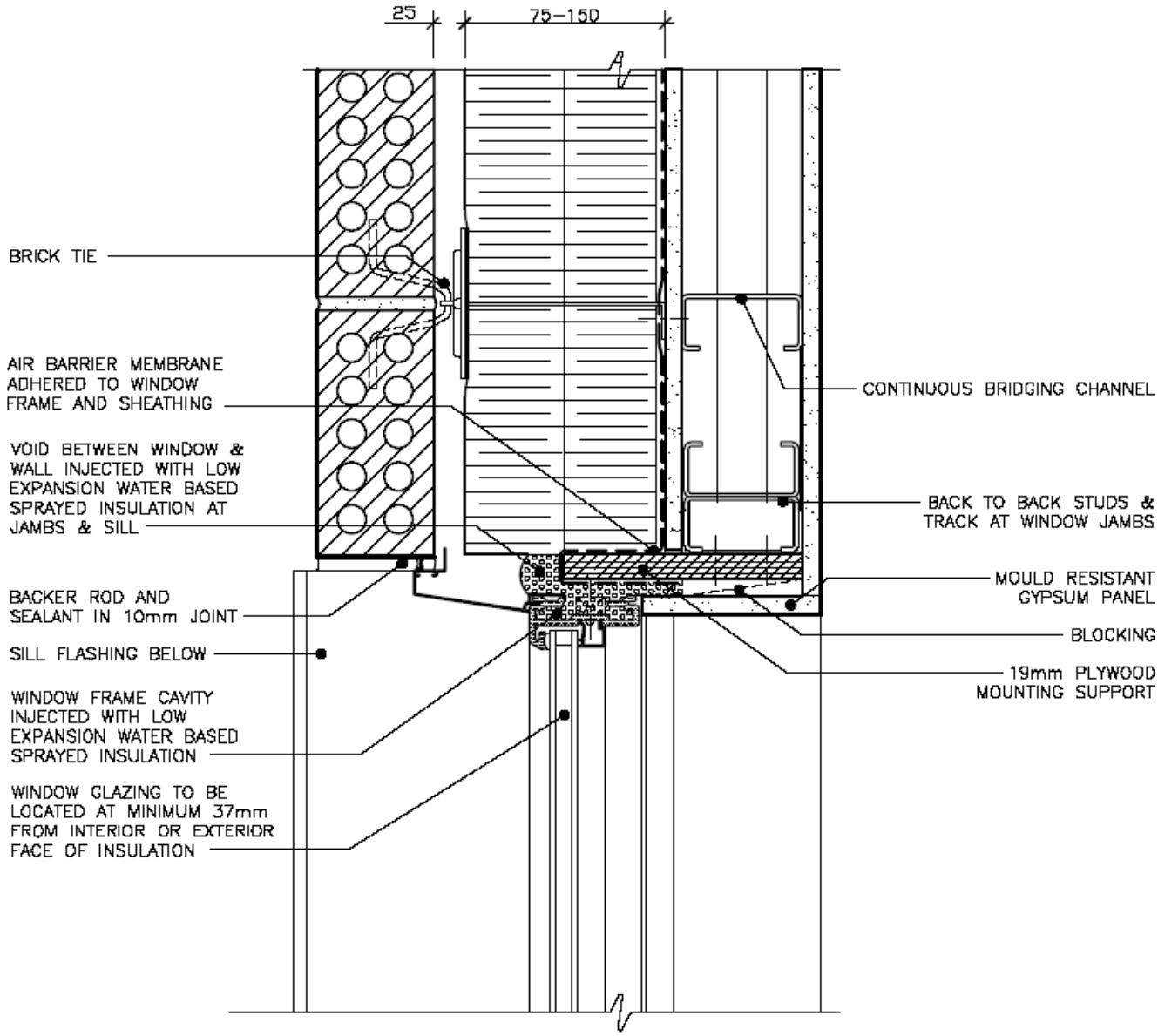

5.2 A WINDOW JAMB DETAIL

NOTE : CONSULT LOCAL CONSTRUCTION CODES FOR SPECIFIC REQUIREMENTS.

3.3.9 Detail 6.1/A and 6.2/A: Slab edge at foundation wall

3.3.9.1 Heat

Detail 6.1/A limits the thermal bridging (heat loss) to a minimum, but the cost of such a detail has been shown to be quite expensive.

Detail 6.2/A does have some thermal bridging (heat loss) and there is the potential for condensation, but this detail is used more often and is accepted within the industry. In order to reduce the thermal bridging issue, we attempted to locate a manufacturer that produces a pre-fabricated concrete sill with expanded polystyrene, but were unsuccessful here in Montreal. The amount of heat loss is a complex calculation (DD to clarify this), and may be beyond the scope of this report. We are aware that current energy code standards allow up to 2 % of exterior surfaces to allow thermal bridging and thus the minimal amount at the foundation / slab joint is significantly less than 2%.

3.3.9.2 Air Movement Control

Detail 6.2/A does allow for the potential of condensation on the warm side of the drainage cavity, however the location of the foundation insulation outside of the foundation wall, is the best defence against the formation of large quantities of condensation. The second precaution we are recommending is the selection of inner materials that resist mould growth. Another factor is that most basement spaces are NOT used for primary living spaces, and when this is not the case, detail 6.1/A should be considered.

3.3.9.3 Water Vapour Control

Detail 6.2/A does allow for the potential of condensation on the warm side of the drainage cavity, however the location of the foundation insulation outside of the foundation wall, is the best defence against the formation of large quantities of condensation. The second precaution we are recommending is the selection of inner materials that resist mould growth. Another factor is that most basement spaces are NOT used for primary living spaces, and when this is not the case, detail 6.1/A should be considered.

3.3.9.4 Water

See text above.

3.3.9.5 Notes

With respect to detail 6.1/A, another important limitation of this detail is the number of stories (or meters) of masonry support. Our experience has shown that contractors and sub-trades are extremely uncomfortable with the idea of supporting 11 meters (3 stories) of masonry (even when the structural analysis shows that it can be done), and the building code has been interpreted by some structural consultants to consider this detail inappropriate unless the continuous shelf angle is supported at every 3 meters.

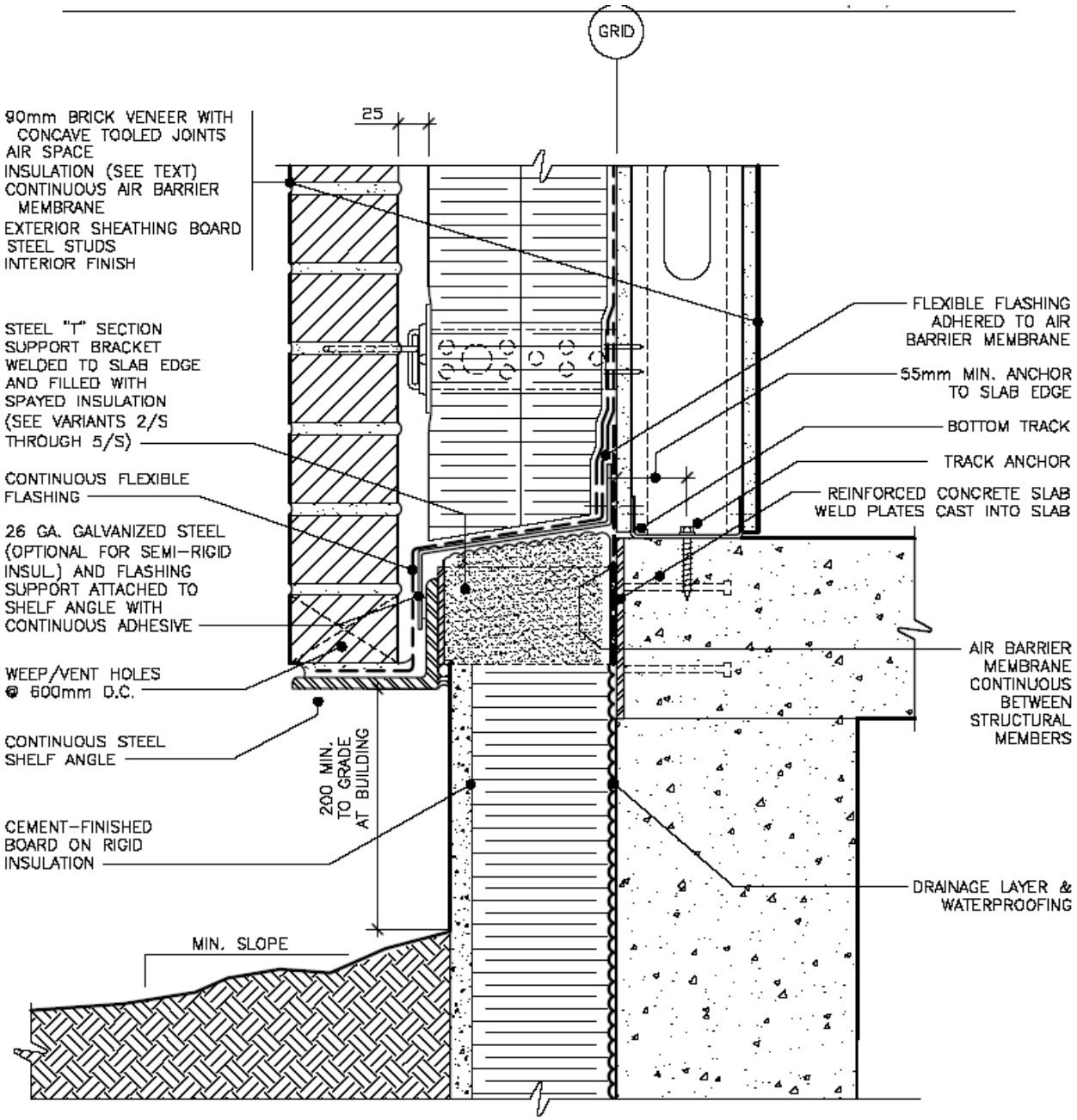

BRICK SUPPORTED ON CANTILEVERED SHELF ANGLE SLAB EDGE AT FOUNDATION DETAIL

6.1
A

NOTE : CONSULT LOCAL CONSTRUCTION CODES FOR SPECIFIC REQUIREMENTS.

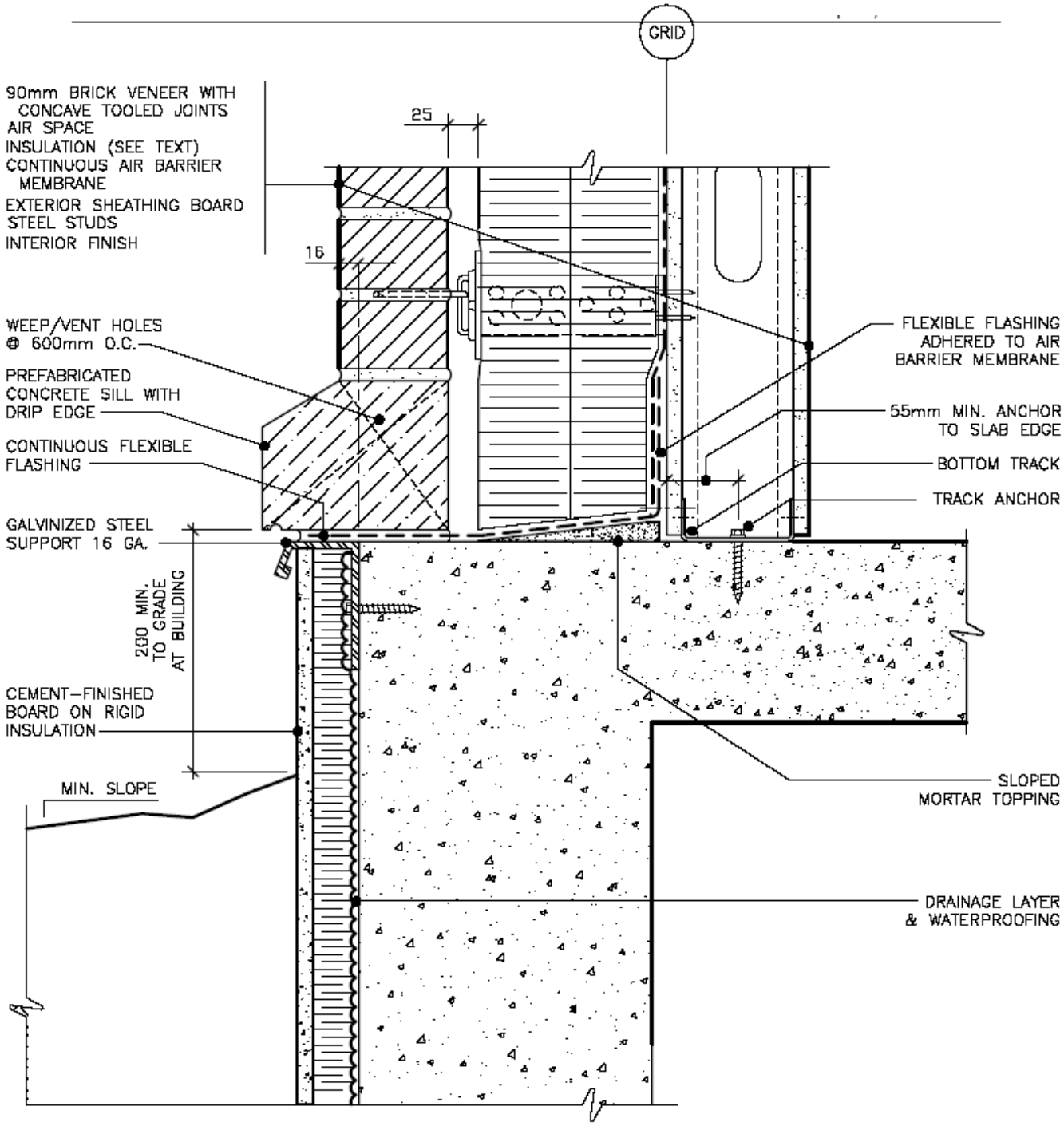

BRICK SUPPORTED
ON FOUNDATION WALL
SLAB EDGE AT FOUNDATION DETAIL

6.2
A

NOTE : CONSULT LOCAL CONSTRUCTION CODES FOR SPECIFIC REQUIREMENTS.

3.3.10 Detail 7/A, 7.1/A and 7.2/A: Roof parapet

3.3.10.1 Thermal Insulation

Detail 7/A limits the thermal bridging (heat loss) to a minimum, but the cost of such a detail has been shown to be more expensive than sitting the parapet wall above the roof slab.

3.3.10.2 Air Movement Control

Detail 7/A allows for the most continuous seal of the wall and roof air / vapor retarders (and water barriers).

3.3.10.3 Water Vapour Control

Detail 7/A allows for the most continuous seal of the wall and roof air / vapor retarders (and water barriers).

3.3.10.4 Water Management

See text above.

3.3.10.5 Notes

The height of the parapet with the HSS structural solution proposed (details 7.1/A and 7.2/A) may be limited to 400 mm above the roof slab, but this may vary with wind and seismic loads.

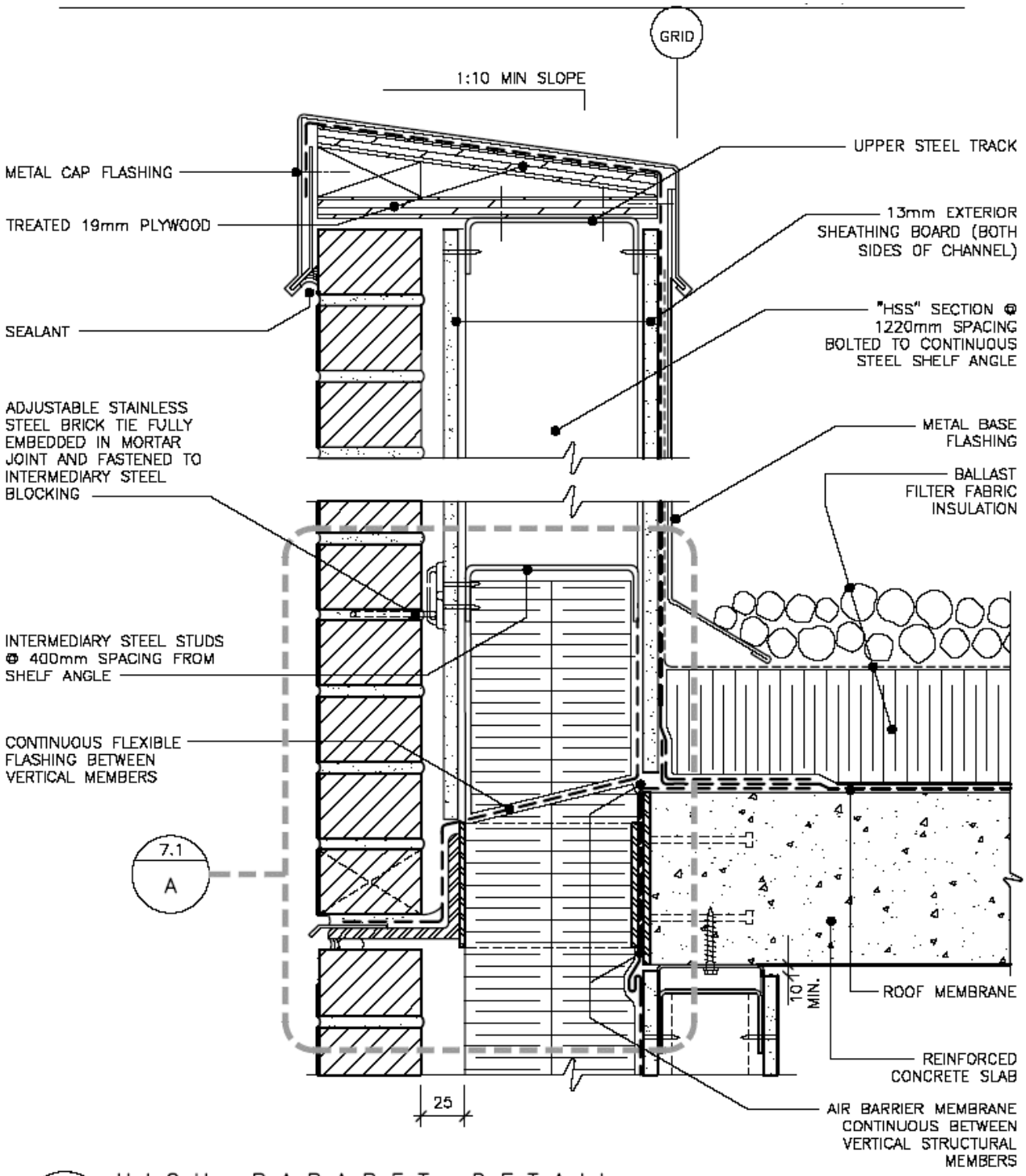

7/A HIGH PARAPET DETAIL

NOTE : CONSULT LOCAL CONSTRUCTION CODES FOR SPECIFIC REQUIREMENTS.

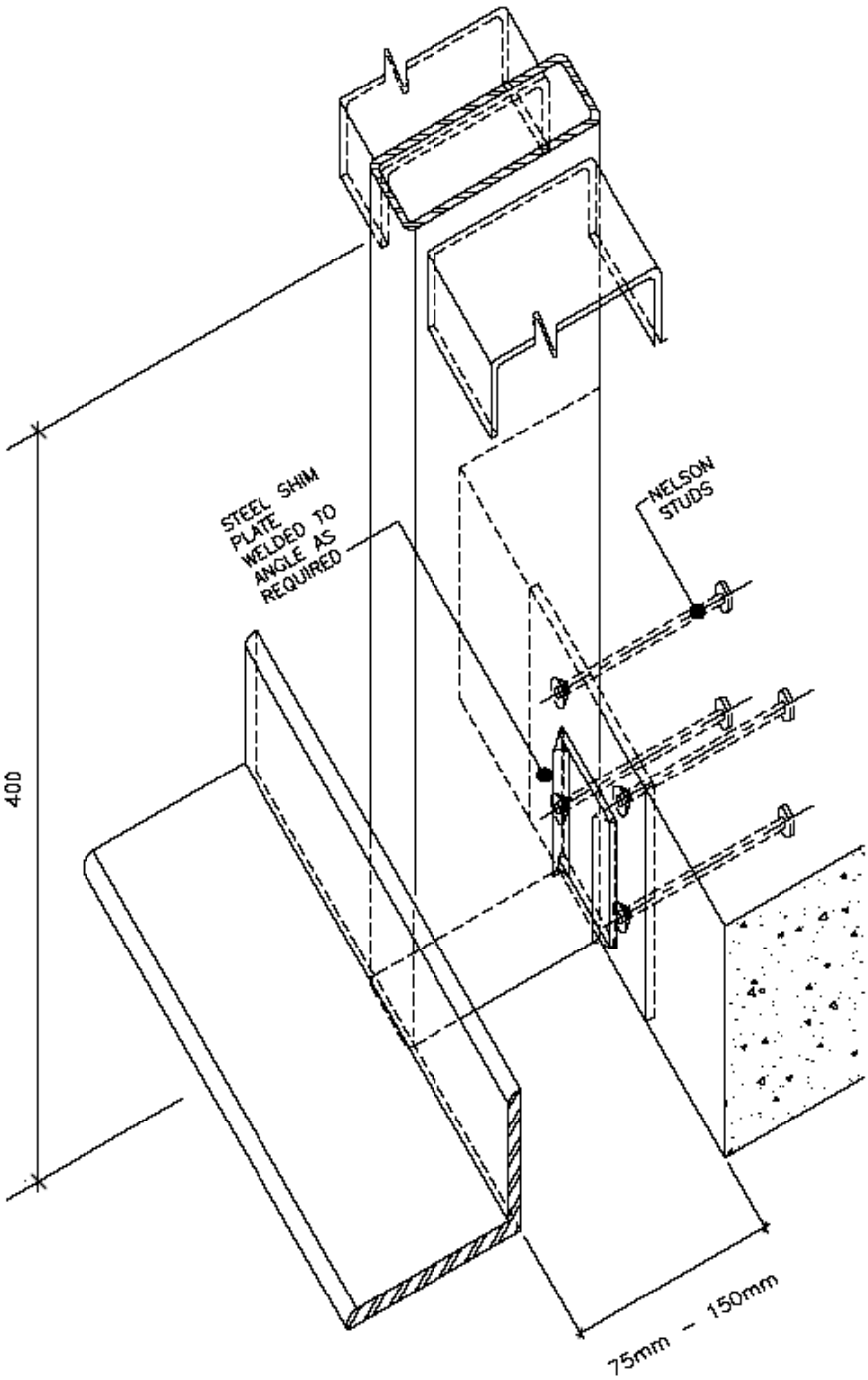

7.1 A "H S S" S E C T I O N W E L D E D T O S H E L F A N G L E

NOT TO SCALE

NOTE : CONSULT LOCAL CONSTRUCTION CODES FOR SPECIFIC REQUIREMENTS.

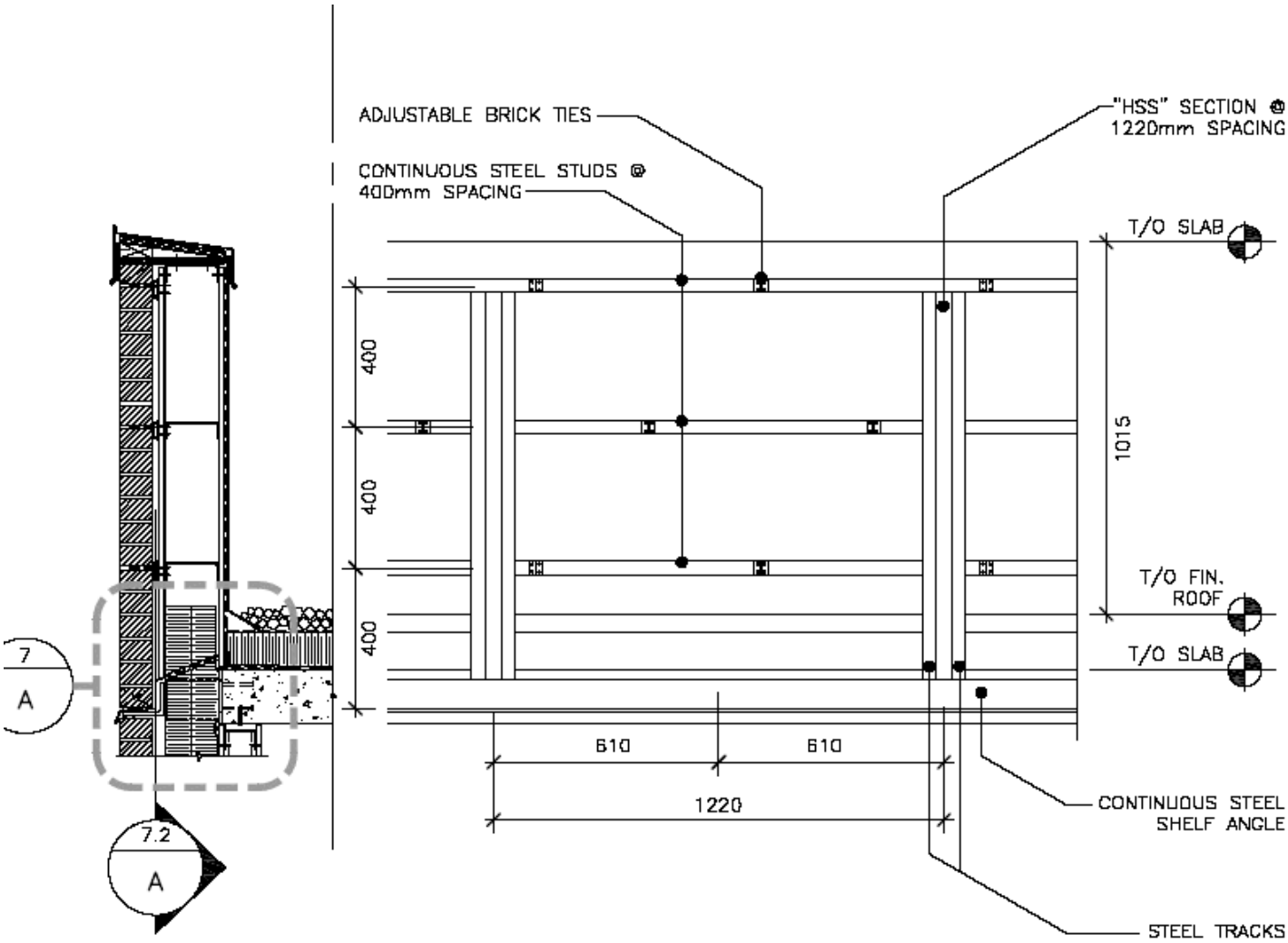

7.2 A "C" CHANNEL / STUD WEB

NOT TO SCALE

NOTE : CONSULT LOCAL CONSTRUCTION CODES FOR SPECIFIC REQUIREMENTS.

3.4 Strategy B: increased insulation inside and outside of the sheathing

In this strategy, insulation is kept on the exterior of the stud assembly, but additional insulation is provided in the stud cavity to increase thermal performance. The major part of the insulation is kept outside to prevent condensation in the permeable interior insulation material or at the interior face of sheathing panels. Detailed thermal simulations of this system have been conducted by Dr. Dominique Derome. This approach attempts to reduce the increased structural costs inherent with strategy A.

3.4.1 Thermal Insulation

The increased insulation improves energy efficiency to meet the energy requirements of most Canadian locations.

More types of insulations may be used in the interior location, as it is generally not exposed to water infiltration, however certain insulation products such as cellulose based insulation become vulnerable if water and air tightness are not achieved at exterior wall openings

Interior insulation is not present at slab edge, columns and other structural elements. Thermal performance at these locations is reduced, and this may govern how much insulation is installed in the outer cavity.

3.4.2 Air Movement Control

The ratio between interior and exterior insulation will impact the control of water vapour and condensation within the assembly. An incorrect design may accelerate condensation and lead to premature deterioration and mould problems.

3.4.3 Water Vapour Control

The ratio between interior and exterior insulation will impact the control of water vapour and condensation within the assembly. An incorrect design may accelerate condensation and lead to premature deterioration and mould problems.

3.4.4 Water Management

In this strategy, the outside insulation is shallower and its drying should be faster as well.

3.4.5 Notes

Part of the work can occur from the inside and when the interior insulation acts as an air retarder this may result in lower labor costs and general condition costs as related to scaffolding and working in extreme temperatures).

3.4.6 Detail 1/B : Slab edge

In this strategy, the composition of the system does differ from the current Best Practice Guide for the steel stud assembly and interior finish. The new consideration is related to the additional insulation within the interior stud wall.

Structurally this solution is simpler and less costly (similar to the current Best Practice Guide for the steel stud assembly and interior finish).

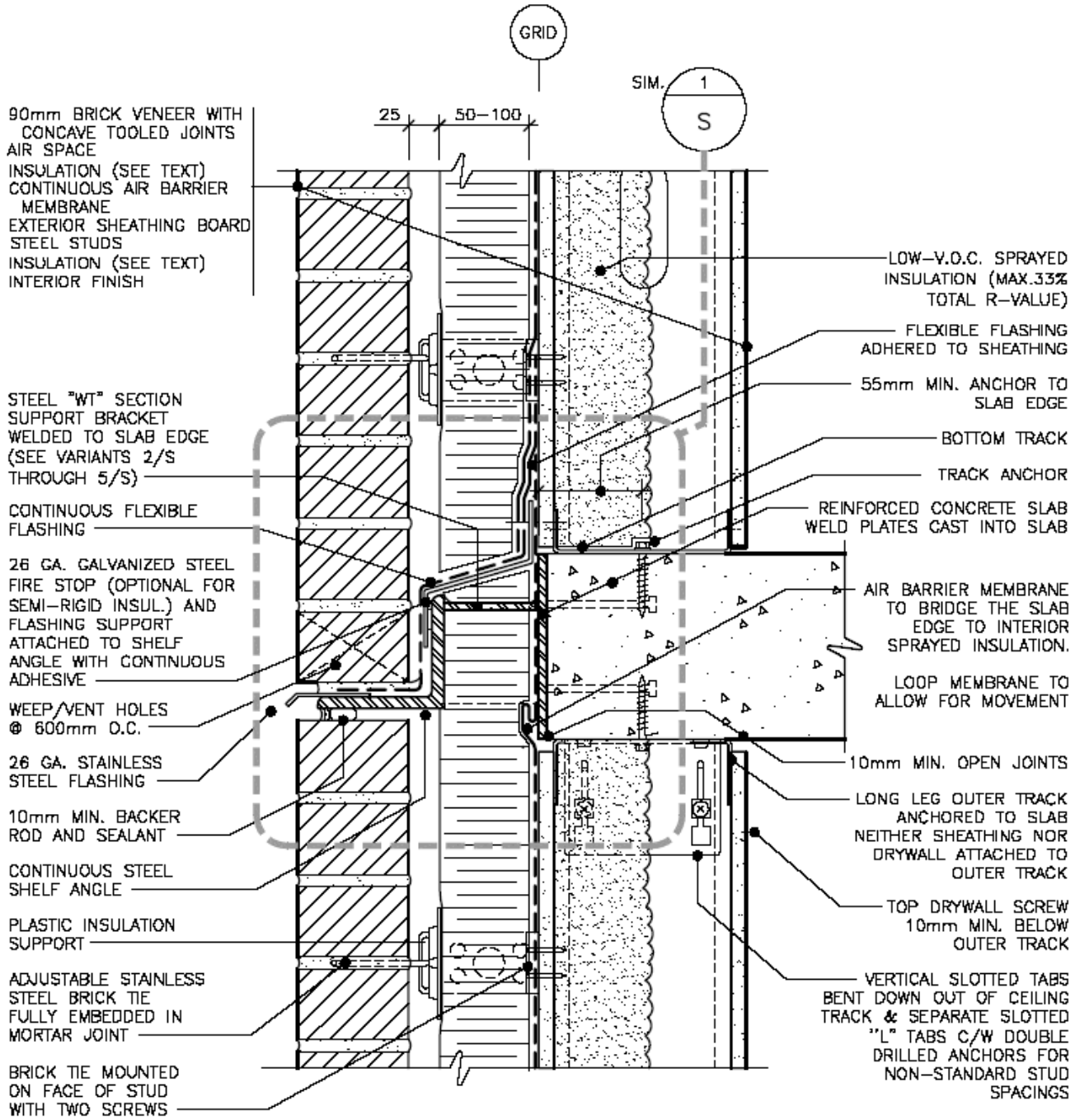

1 B

S L A B E D G E D E T A I L

NOTE : CONSULT LOCAL CONSTRUCTION CODES FOR SPECIFIC REQUIREMENTS.

3.4.7 Details 4.1/B : Window at u/s slab

3.4.7.1 Thermal Insulation

The center plane of the insulated glazing unit should be located within the thickness of the wall insulation to reduce thermal bridging at the window frame.

3.4.7.2 Air Movement Control

Option 4.1 is difficult to construct while assuring air tightness compared to detail 4.2/A, and the air barrier system becomes even more challenging when the window is significantly cantilevered in order to align the glazing unit with the exterior insulation to avoid thermal bridging. Also see further notes below (section 3.3.7.5).

3.4.7.3 Water Vapour Control

Water vapour control can be achieved by either the continuous air barrier membrane or by an approved water vapour control interior paint finish (depending on environmental context).

3.4.7.4 Water Management

Interior window sills should use materials which do not support mould growth. This location is subject to condensation caused by the lower thermal resistance of the window frame relative to the wall assembly and to water infiltration, especially with operable windows.

3.4.7.5 Notes

See note 3.3.7.5

MDF (Medium density fiber) window surround is shown here. The material can be specified with phenolic glues instead of formaldehyde (for improved indoor air quality).

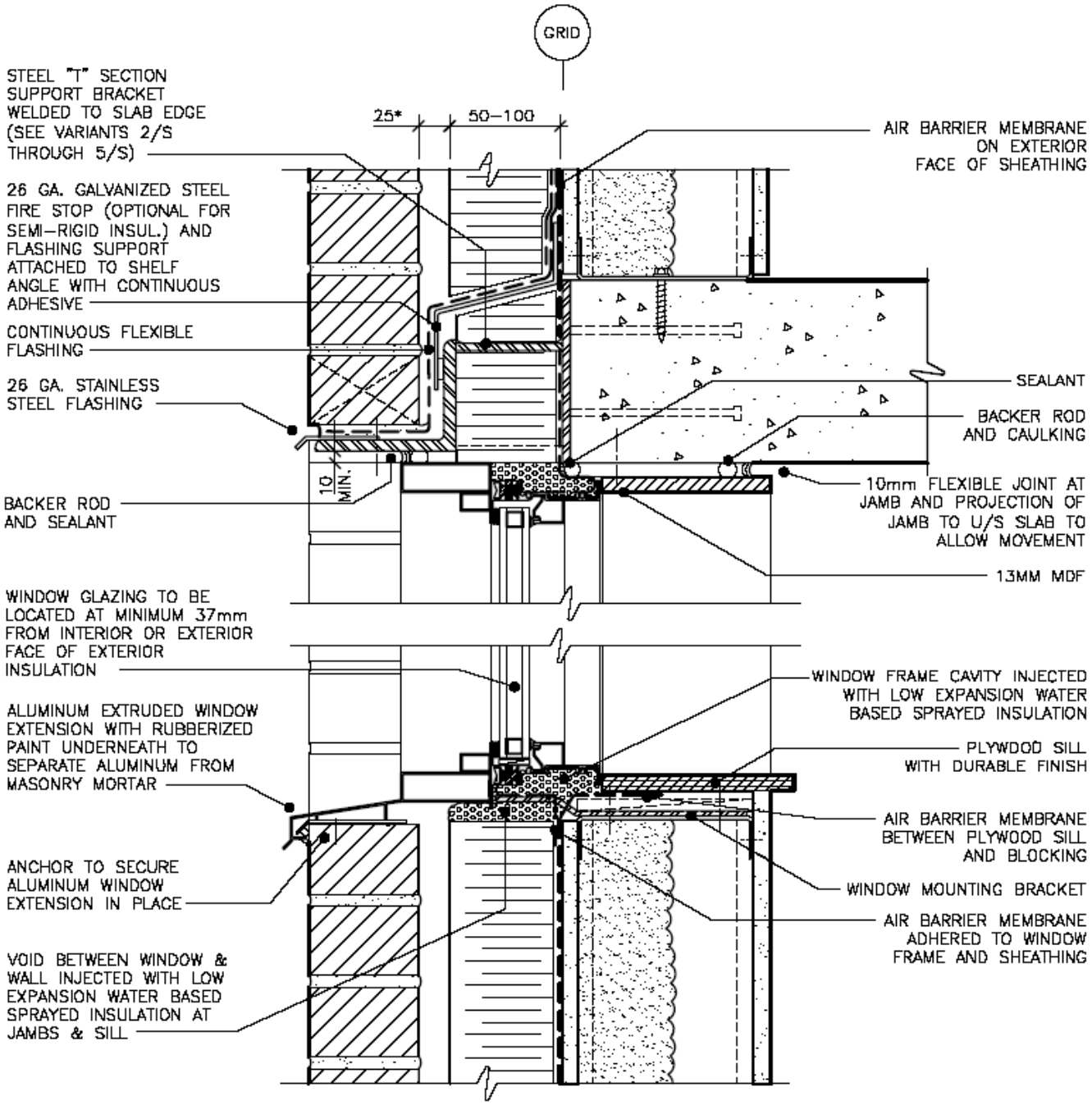

4.1 B

WINDOW AT U/S SLAB DETAIL

NOTE : CONSULT LOCAL CONSTRUCTION CODES FOR SPECIFIC REQUIREMENTS.

3.4.8 Details 5.1/B: Window jamb

There are no major significant differences from 5.1/A and 5.2/A

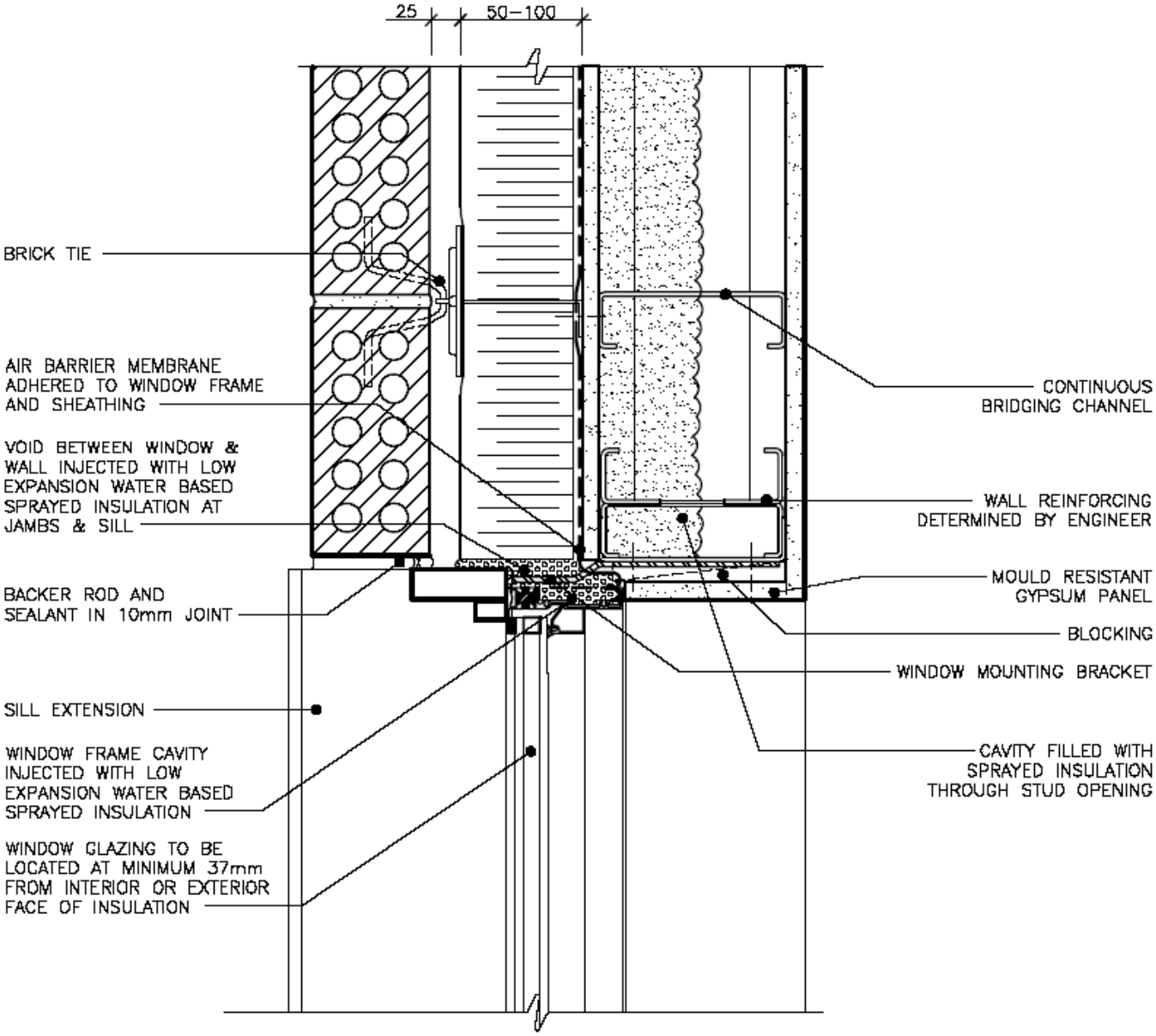

5.1 B

WINDOW JAMB DETAIL

NOTE : CONSULT LOCAL CONSTRUCTION CODES FOR SPECIFIC REQUIREMENTS.

3.5 Alternative envelope strategy C: stud assembly recessed from slab edge

3.5.1 Detail 1/C : Slab edge

Strategy C attempts to limit the increased structural costs associated with strategy A, while The insulation inside the stud cavity prohibits use of shallower 92mm studs where they would otherwise be adequate.

The system is composed of more elements which restrict the sequence of construction of the wall assembly.

The insulation in the cavity may be in contact with air circulating in the interior environment. VOC emissions or support for mold contamination restrict possible insulation types.

The presence of low permeance components such as the air barrier or sheathing panels midway in the wall assembly may cause condensation in extreme conditions. Analysis or simulation of this type of assembly should be performed based on project conditions and specific materials.

None of the disadvantages appear to be significant enough to impede our research of this option. As a compromise between strategies A and B, strategy C maintains the entire insulation outside the stud wall (as in A), but recesses the stud assembly behind the edge of the slab. In doing so, the shelf angle cantilever from the slab edge is reduced to a distance similar to B.

This strategy obviates the need for two separate insulation applications (interior and exterior).

This strategy reduces the amount of insulation at the slab edge and other structural elements (columns, shear walls) located at the outside face of the structural frame.

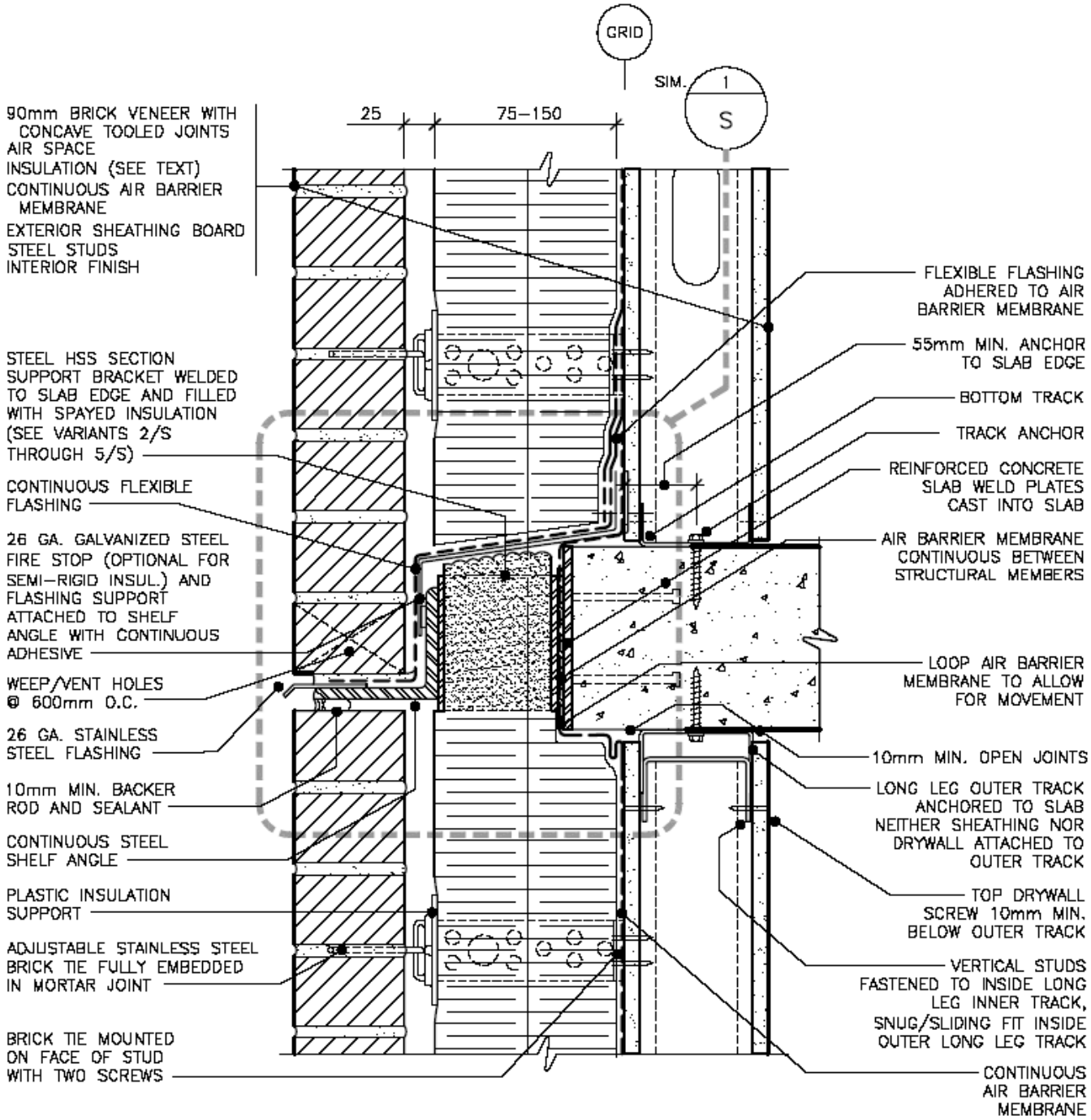

1 C SLAB EDGE DETAIL

NOTE : CONSULT LOCAL CONSTRUCTION CODES FOR SPECIFIC REQUIREMENTS.

3.6 Evaluation of Hygrothermal Performance of Proposed Assemblies

3.6.1 Introduction

Numerous simulations were run to provide insight on the hygrothermal performance for several of the assemblies proposed in this section. Although some generalized simulation results are presented in a table next to each set of details in this section (acceptable, problematic or requires further simulation analysis), envelope designers must evaluate their specific building envelope context including potential micro-climate problems such as increased wind, sun or rain exposure.

The main criterion of evaluation used in this comparative study was the occurrence of water vapour accumulation within assembly over a three year cumulative period.

3.6.2 Simulation procedure

The hygrothermal software WUFI 3.3* was used for the simulations and, when available, data from manufacturers was used.

3.6.3 Results for Strategy A: all insulation outside

Three types of exterior sheathing boards were simulated; gypsum, fiber glass faced gypsum and cement board, and two types of insulation on the exterior of the sheathing board were simulated; sprayed polyurethane and extruded polystyrene sheets. The simulations were run for four climate scenarios (see table below describing the four regions) and all water vapour accumulation results within the various wall combinations, show satisfactory performance.

3.6.4 Results for strategy B : insulation on both sides of sheathing

In this approach, when insulation is placed on both sides of the sheathing, four variables come into play: the type of insulation, the type of sheathing, the ratio of insulation value on both of the sheathing panel and the climate to which the assembly is subjected to.

Such type of assemblies are therefore not simple to evaluate and it is recommended to investigate their behavior using specific manufacturer's data and site specific climatic conditions.

Although placing insulation on both sides of the sheathing may involve some water vapour condensation risk (since holes in air barriers almost always occur), the choice of hygroscopic materials, like the paper of gypsum board which would be in direct contact with the steel structure, and on-site air tightness testing procedures that would better control air leakage, may prove more important than balancing the exact ratio of internal and external insulation.

* http://www.ornl.gov/sci/btc/apps/moisture/

3.6.5 Hygrothermal modeling and testing

The following chart describes the conditions for each of the walls that were modeled using the hygrothermal software WUFI 3.3
http://www.ornl.gov/sci/btc/apps/moisture/

	Gypsum board	Polyethylene membrane	Empty stud space	Batt mineral insulation	Low-density polyurethane	Cellulose insulation	Exterior gypsum	Cement board	Air barrier membrane	polyurethane	Batt mineral insulation	Air space 25 mm	Brick veneer 90 mm
1							x			150 mm		x	x
2	x paint*			89 mm			x		x	75 mm		x	x
3	x paint*			89 mm			x			75 mm		x	x
4	x paint*	x		89 mm			x			75 mm		x	x
5	x				89 mm		x			75 mm		x	x
6	x					89 mm	x			75 mm		x	x
7	x				89 mm		x				75 mm	x	x

- equivalent of vapour barrier paint

Material properties

Material	Bulk density [kg/m3]	Porosity [m3/m3]	Specific heat capacity [J/kgK]	Thermal conductivity [W/mK]	Water vapor diffusion resistance factor [-]
Brick	1630	0.35	850	0.6	0.5 to simulate ventilation
Air 25 mm	1.3	0.999	1000	0.155	0.51
Sprayed polyurethane	44 (2.5-3 lb/ft3)	0.95	1500	0.025 (K 0.135 in, R 7.4/in)	92 (1.4 perms per inch)
Air barrier membrane	2400	0.001	1000	0.5	100000
Gypsum board	720	0.65	870	0.163	6
Low density sprayed polyurethane	8 (0.45-0.5 lb/ft3)	0.95	1500	0.038 (R3.8/in)	23 (5.47 perms per inch)
Mineral wool	60	0.95	850	0.04 (R3.5/in)	1.3
Witness softwood	400	0.73	1500	0.09	50

Surface conditions

Exterior – heat resistance	outer wall – 0,056
Sd value	no coating
radiation	red brick absorption 0.69, emissivity 0.9
rain absorption	0.7
Interior – heat resistance	0.13
Sd – value	gypsum only – 0.1 gypsum with kraft paper (alkyde paint) – 3

Loading

Exterior- weather data files of each city

All walls done for four Canadian regions Lower BC Mainland, Prairie region, St. Lawrence Lowlands and Maritime region.

Interior – medium load

Such simulations assume perfect airtight assemblies

Simulation results

Done for 3 years of calculation

Numbers in MC columns are maximum mass of water per cubic meter during the last year of the simulation. Numbers in bold denotes MC of 20% and more.

	Prairie region	MC	St. Lawrence Lowlands	MC	Maritime region.	MC	Lower BC Mainland	MC
1	Base		-		-		-	
1 witness	Base	42	-		-		-	
2 witness	Base	65	Base	54	Base	48	Base	51
	No paint	**100**	-	-	-	-	-	-
	No paint 38 mm PU	**240**	-	-	-	-	-	-
	Paint 38 mm PU	**80**	Paint 38 mm PU	70	Paint 38 mm PU	55	Paint 38 mm PU	60
3 witness	Base	50	Base	60	Base	46	Base	50
	No paint	**91**						
	All no paint:							
	R10 in vs R13 out	**110**						
	R13 in vs R13 out	**130**						
	R20 in vs R13 out	**200**						
4 witness	Base	33	Base	60	Base	48	Base	50
	No poly-surface	42						
5 witness	Base	52	Base	53	Base	45	Base	48
6 witness	Base	55						
	No paint	**85**						
7 witness	No paint	50						
	No paint with airbarrier membrane	**85**						

3.6.6 Hygrothermal Data Analysis

Wall 1 – When all the sprayed insulation (polyurethane) is located on the exterior of the sheathing, the wall performs satisfactorily (Details from A series).

Wall 2 – With mineral rockwool insulation on the inside of the sheathing and sprayed insulation (polyurethane) on the outside, the wall behaves satisfactorily when the interior gypsum board is coated with a vapour barrier paint.

Without a vapour barrier paint, MC (moisture content) is too high. With 38mm of sprayed insulation (polyurethane), the maximum MC is problematic for the Prairie region and could be of concerned for St. Lawrence Lowlands region as well.

Wall 3 – With mineral insulation on the inside of the sheathing and sprayed insulation (polyurethane) on the outside, the wall behaves satisfactorily when the interior gypsum board is coated with a vapor barrier paint. Without paint, MC is too high. An exercise of varying the ratio of thermal resistance of the mineral wool in the stud cavity and polyurethane on the outside of the sheathing shows an increase of water vapour *accumulation as the temperature in the exterior sprayed insulation is reduced by increasing the amount of mineral wool. Designers must carry out their own hygrothermal analyses for these scenarios, as they will vary with material properties, building height, and other local context factors.*

Wall 4 – With a vapor barrier, all walls behave satisfactorily

Wall 5 – With sprayed insulation (polyurethane) on both sides of the sheathing, the wall behaves satisfactorily.

Wall 6 – With cellulose insulation, the behavior is similar to mineral wool

Wall 7 – With low density polyurethane between the studs and mineral wool on the outside of the sheathing, an air-vapor barrier membrane in the absence of a vapour retarder paint could lead to water vapour accumulation.

Four Canadian Climate regions evaluated

Lower BC Mainland : (ZONE = marine) :
(Approx. 3000 HDD CELSIUS)

Prairie Region: (ZONE = very cold, dry):
(Approx. 5400 HDD CELSIUS)

St. Lawrence Lowlands: (ZONE = cold):
(4500 HDD CELSIUS)

Maritime Region : (ZONE = cold) :
(4000 HDD CELSIUS)

3.6.7 General Conclusions:

The type of wall assembly has more impact on potential water vapour build-up than the climatic load. All climatic loads are principally cold or very cold climates and they principally differ with respect to what type of vapor retarder is most appropriate, more or less vapor permeable (see section 2.1.3). When R values of 10 or more are located outside of the exterior sheathing board, the temperature of the sheathing surface is sufficiently warm enough to minimize the risk of condensation build-up.

Visit our home page at www.cmhc.ca