#288

Rockfish Tagging Cruises Off Southwest Vancouver Island *(M/V Ocean King)* and Off Northwest Vancouver Island and in Queen Charlotte Sound *(M/V Blue Waters)* During 1980.

DFO - Library / MPO - Bibliothèque
12033751

W. Shaw, D.A. Nagtegaal, C.P. Archibald, and B.M. Leaman

Department of Fisheries and Oceans
Resource Services Branch
Pacific Biological Station
Nanaimo, British Columbia V9R 5K6

Fisheries & Oceans
LIBRARY
DEC 29 1981
BIBLIOTHÈQUE
Pêches & Océans

August 1981

Canadian Data Report of Fisheries and Aquatic Sciences No. 288

QH
90.5
C33
cop 1

Copy 1

Government of Canada Fisheries and Oceans
Gouvernement du Canada Pêches et Océans

Canadian Data Report of Fisheries and Aquatic Sciences

These reports provide a medium for filing and archiving data compilations where little or no analysis is included. Such compilations commonly will have been prepared in support of other journal publications or reports. The subject matter of Data Reports reflects the broad interests and policies of the Department of Fisheries and Oceans, namely, fisheries management, technology and development, ocean sciences, and aquatic environments relevant to Canada.

Numbers 1-25 in this series were issued as Fisheries and Marine Service Data Records. Numbers 26-160 were issued as Department of Fisheries and the Environment, Fisheries and Marine Service Data Reports. The current series name was changed with report number 161.

Data Reports are not intended for general distribution and the contents must not be referred to in other publications without prior written clearance from the issuing establishment. The correct citation appears above the abstract of each report.

Rapport statistique canadien des sciences halieutiques et aquatiques

Ces rapports servent de base à la compilation des données de classement et d'archives pour lesquelles il y a peu ou point d'analyse. Cette compilation aura d'ordinaire été préparée pour appuyer d'autres publications ou rapports. Les sujets des Rapports statistiques reflètent la vaste gamme des intérêts et politiques du Ministère des Pêches et des Océans, notamment gestion des pêches, techniques et développement, sciences océaniques et environnements aquatiques, au Canada.

Les numéros 1 à 25 de cette série ont été publiés à titre de Records statistiques, Service des pêches et de la mer. Les numéros 26-160 ont été publiés à titre de Rapports statistiques du Service des pêches et de la mer, Ministère des Pêches et de l'Environnement. Le nom de la série a été modifié à partir du numéro 161.

Les Rapports statistiques ne sont pas préparés pour une vaste distribution et leur contenu ne doit pas être mentionné dans une publication sans autorisation écrite préalable de l'établissement auteur. Le titre exact paraît au haut du résumé de chaque rapport.

Canadian Data Report of Fisheries

and Aquatic Sciences No. 288

August 1981

ROCKFISH TAGGING CRUISES OFF SOUTHWEST VANCOUVER ISLAND (M/V OCEAN KING) AND OFF NORTHWEST VANCOUVER ISLAND AND IN QUEEN CHARLOTTE SOUND (M/V BLUE WATERS) DURING 1980

by

W. Shaw, D. A. Nagtegaal, C. P. Archibald, and B. M. Leaman

Department of Fisheries and Oceans

Resource Services Branch

Pacific Biological Station

Nanaimo, British Columbia V9R 5K6

(c) Minister of Supply and Services Canada 1981

Cat. No. Fs 97-13/288 ISSN 0706-6465

ABSTRACT

Shaw, W., D. A. Nagtegaal, C. P. Archibald, and B. M. Leaman. 1981. Rockfish tagging cruises off southwest Vancouver Island (M/V OCEAN KING) and off northwest Vancouver Island and in Queen Charlotte Sound (M/V BLUE WATERS) during 1980. Can. Data Rep. Fish. Aquat. Sci. 288: 133 p.

In 1980, the Groundfish Program at the Pacific Biological Station conducted two rockfish tagging cruises, concentrating primarily on the yellowtail rockfish (Sebastes flavidus), in commercially important areas off the west coast of Vancouver Island and in Queen Charlotte Sound. The purposes of this study were to develop techniques specific for rockfish tagging, determine migration, abundance and growth patterns, and provide additional information to validate rockfish ageing techniques. The first cruise (May 23-June 12), off southwest Vancouver Island, tagged and released 6,540 rockfish of which 2% were double-tagged with "suture" tags. The second cruise, off northwest Vancouver Island and in Queen Charlotte Sound (August 8-22), tagged and released 2,493 rockfish. During both cruises, approximately 98% of the fish were given intraperitoneal injections of oxytetracycline at a dosage of 50 mg/kg body weight. Pre and post-tagging mortality rates were calculated, in conjunction with injury and condition information on the fish at time of release, to estimate the number of viable, tagged rockfish at large.

Key words: Rockfish, tagging, age determination, mortalities.

RESUME

Shaw, W., D. A. Nagtegaal, C. P. Archibald, and B. M. Leaman. 1981. Rockfish tagging cruises off southwest Vancouver Island (M/V OCEAN KING) and off northwest Vancouver Island and in Queen Charlotte Sound (M/V BLUE WATERS) during 1980. Can. Data Rep. Fish. Aquat. Sci. 288: 133 p.

En 1980, dans le cadre du programme des poissons de fond de la Station de biologie du Pacifique, on a effectué deux expéditions d'étiquetage des scorpènes, axées principalement sur le sébaste à queue jaune (Sebastes flavidus), dans les zones de pêche importantes sur le plan commercial au large de la côte ouest de l'île Vancouver et dans le bassin Reine-Charlotte. La présente étude visait à mettre au point des méthodes de marquage appliquées aux scorpènes, de déterminer les modes de migration et de croissance ainsi que l'abondance, et de fournir des données complémentaires afin d'assurer la validité des techniques de détermination de l'âge des scorpènes. Au cours de la première expédition (du 23 mai au 12 juin) au large de la côte sud-ouest de l'île Vancouver, on a marqué et remis en liberté 6 540 scorpènes dont 2 % furent munis de deux étiquettes "cousues". Au cours de la seconde expédition au large de la côte nord-ouest de l'île Vancouver et dans le bassin Reine-Charlotte (du 8 au 22 août), on a marqué et remis en liberté 2 493 scorpènes. Près de 98% des poissons ont reçu une injection intrapéritonéale d'oxytétracycline à raison de 50 mg/kg de poids. Afin d'avoir une idée générale du nombre de scorpènes marqués viables, on a calculé, avant et après le marquage, le taux de mortalité et on a noté l'état et les blessures des poissons au moment de leur remise en liberté.

Mots clés: scorpènes, marquage, détermination de l'âge, mortalités.

INTRODUCTION

In 1980, the Groundfish Program of the Pacific Biological Station began a multiyear rockfish (Sebastes spp.) tagging program. The main purpose of this study is to tag commercially important rockfishes, primarily Sebastes flavidus, in an attempt to validate ageing, delineate stocks and determine their abundance, distribution, and growth. Although a significant amount of the biology of Pacific ocean perch (S. alutus) has been established (Westrheim 1958, 1970, 1973), there is little known about the biology of the other rockfishes that occur off Canada's west coast.

The first tagging study was conducted during May-June 1980 off the southwest coast of Vancouver Island and the northwest coast of Washington, U.S.A. The objectives of this study were to examine rockfish migrations, especially in the vicinity of the international boundary, and develop tagging techniques specific to rockfish. The second tagging study was conducted during August 1980 in Queen Charlotte Sound and off the northwest coast of Vancouver Island. During both tagging cruises, experiments designed to validate rockfish ageing techniques were conducted.

MATERIALS AND METHODS

VESSELS AND NETS

The M/V OCEAN KING, a 24.4 m (80 ft) steel-hulled commercial stern trawler, was awarded the charter for the first tagging cruise. An "Egeland" flat bottom trawl (Appendix Table 1), equipped with a 3.8 cm (1.5 in) mesh liner, was used for only four hauls. For the remainder of the trip, an "Egeland" midwater trawl (Appendix Table 2) was used. No liner was sewn in since the codend was enclosed by 8.9 cm (3.5 in) mesh chafing gear.

The vessel chartered for the second tagging cruise was the M/V BLUE WATERS, a 28 m (92 ft) commercial stern trawler. Initially, a Diamond VII midwater trawl (Appendix Table 3) was used. However, due to a lack of success and some major damage to the midwater net, an Atlantic Western III bottom trawl (Appendix Table 4) was used for the remainder of the cruise. All tows were made at a speed of 2.0-3.0 kn and each tow was kept as short as possible (~30 min) in order to minimize damage to the fish. Vessel specifications for the M/V OCEAN KING and the M/V BLUE WATERS are contained in Appendix Table 5.

TAGGING EQUIPMENT AND PROCEDURE

A limited amount of information has been published regarding tagging techniques for rockfish. Tagging experiments were conducted on redfish (Sebastes marinus) at Eastport, in the Gulf of Maine (Kelly and Barker 1961, 1963a, 1963b), but they were mostly concerned with age validation. The redfish were caught with hook and line off a dock and as such did not reflect the conditions under which rockfish are caught commercially. In an attempt to alleviate some of the distressing effects of large pressure changes, Sandeman and Rees (1963) used a metal cage to facilitate the return of redfish to the depth at which they were caught. This method proved to be fairly successful although only the most lively fish were selected for tagging. Another method developed to increase rockfish survival was used by Gotshall (1964). This technique involved the insertion of a hypodermic needle into the swimbladder allowing the excess gas to escape. During a tagging study off California, fish caught on hooks from depth to 75 m (40 fm) were successfully deflated, released and recovered some months later. This same technique was also found to be successful for rehabilitating Pacific cod (Gadus macrocephalus) for tagging purposes (Leaman et al. 1979).

During each cruise two tanks were used for anaesthetizing the fish prior to tagging and one tank for recuperation. Two 2,457 L (543 gal) and one 780 L (172 gal) oval fiberglass tanks were used in the first cruise; two 2,038 L (448 gal) and one 2,467 L (543 gal) oval fiberglass tanks were used in the second trip. Fish were hand-transferred to both anaesthetic tanks immediately after the codend was split on the deck. The anaesthetic used was MS-222 (ethyl-m-amino benzoate methane sulfonate) and was administered at various dosages depending on the condition of the fish; the most common working dosage was 1:80,000 by volume.

When the capacity of the two tanks was reached, each fish was immediately treated for barotrauma by deflating the swimbladder with a hypodermic syringe. The point of deflation was slightly posterior to the end of the pectoral fin. Applying gentle pressure to the abdomen enabled excess gas in the swimbladder to be expelled through the hollow syringe. The fish were then left in the covered anaesthetic tank for approximately 5-10 min before tagging.

Fish were individually removed from the anaesthetic tank with a shallow, fine-mesh dip net and passed to one of the taggers. All rockfish were measured to the nearest centimetre (fork length) and tagged with a nylon anchor tag[1] by means of a Floy Mark II long tagging gun, equipped with a heavy duty stainless steel needle. Each tag was implanted in the muscle tissue immediately below the spiny dorsal fin on the left side. In addition to the anchor tags, 2% of the S. flavidus from the first cruise were double-tagged with a 5.1 cm (2.0 in) suture tag[2] using 9.1 kg (20 lb)

---

[1]FD68BC Anchor
[2]FT-4C Suture
} Floy Tag Manufacturing Co. Seattle, Wash. 98105.

test monofilament sewn through the dorsal part of the caudal peduncle. Care was taken to ensure that all tags were properly inserted. All tags carried an identifying number and the address of the Pacific Biological Station, where a reward for whole, tagged fish could be claimed.

As part of the tagging procedure, approximately 98% and 100% of the rockfish tagged during the first and second cruises, respectively, were administered intraperitoneal injections of oxytetracycline (OTC), more commonly known as liquamycin. This a calcium-specific agent which marks bony structures and is incorporated in the actively growing periphery of the otoliths (Wild and Foreman 1980). These "time marks" can be viewed under a microscope using ultra-violet light (Kobayashi et al. 1964) and will be used as an adjuvant in growth and age determination. The remaining 2% of the tagged rockfish (from the first cruise) represented a control group and were injected only with sterilized, Ringer's saline solution.

The dosage required to obtain a distinct mark on the otolith determined by Weber and Ridgway (1962) ranged from 20-100 mg of OTC/kg of body weight, with a recommended concentration of 100 mg OTC/kg to be used in the field. Concentrations of 50 and 100 mg OTC/kg were tried in the laboratory on sablefish (Anoplopoma fimbria) by Beamish et al. (1978) and the lower concentration of OTC produced a satisfactory mark on the otolith.

In our limited laboratory study, locally obtained specimens of Sebastes caurinus and S. maliger were injected with amounts of 30, 50, 70, and 90 mg OTC/kg and maintained in a large saltwater tank at ambient water temperature for 1 1/2 months. No differences in the clarity of the OTC marks on the periphery of the otolith between specimens were observed over the short duration of the experiment.

A working dosage of 50 mg OTC/kg was adopted for both rockfish tagging cruises since 100 mg OTC/kg was felt to be excessive and possibly detrimental to the fish. During previous sablefish tagging experiments (Beamish et al. 1979) a dosage of 100 mg OTC/kg was discontinued when preliminary analysis revealed that recovery rates of sablefish injected with the high concentration of OTC were lower than the recovery rates of fish that were not injected. To further investigate the effects of varying OTC strengths, rockfish survivorship and otolith marking visibility, a long-term study is pending. To ease the administration of the viscous liquamycin solution in the field, each 250 mL bottle was diluted with an equal amount of sterilized, Ringer's saline solution and placed into 500 mL bottles, capped with rubber serum stoppers. Injections were given with a 10 mL syringe equipped with a 19 G 3.8 cm long needle. The volume of injection was determined to the nearest 0.5 mL, based on a length-weight relationship (Phillips 1964).

After the tagging procedure was completed, the fish were immediately placed into a large, covered recovery tank (2,467 L) and allowed to recuperate for a minimum of one hour. Constant circulation and replenishment with fresh seawater was maintained at all times by the vessel's deck hoses. This procedure was also used for fish held in the recovery tank overnight. All fish were individually released using a dipnet and notes on their characteristics and condition were recorded. After each haul, all tanks were drained and refilled with fresh seawater. On several

occasions, fish from the last haul of the day were kept in the recovery tank overnight in an attempt to assess initial mortality due to tagging and/or injections of OTC or Ringer's solution.

RESULTS

GENERAL

Both cruises concentrated on tagging yellowtail rockfish (*Sebastes flavidus*) in commercially important areas. The M/V OCEAN KING cruise (OK80-1), off the southwest coast of Vancouver Island, completed 57 hauls of which 53 were midwater tows. Tagging was concentrated, in decreasing order of effort, at Ollie Spot, Big Bank, Finger Bank, and San Juan. The M/V BLUE WATERS cruise (BW80-1) in Queen Charlotte Sound completed 59 hauls of which 28 were midwater tows. Tagging was concentrated, in decreasing order of effort, at the southeast corner of Goose Island Gully, Topknot, Triangle Island, and Cape Scott Spit. Locations of hauls made for both OK80-1 and BW80-1 cruises are shown in Fig. 1 and 2, respectively. Summaries of the total catch by species for each cruise are presented in Table 1. Detailed records of bridge-log information and species composition of catches by haul are contained in Appendix Tables 6 and 7. A list of common and scientific names of the fish caught during both cruises is presented in Appendix Table 8.

As part of a cooperative effort with oceanographic staff for obtaining more data from major fishing grounds, expendable bathythermograph (XBT) readings were taken to record temperature gradients at various stations off the west coast of Vancouver Island and in Queen Charlotte Sound (Fig. 3, 4). Surface salinity samples were taken only from Queen Charlotte Sound and northwest Vancouver Island and are summarized in Table 2.

In addition to the tagging data, some biological samples were also collected and a list by species is summarized for both cruises in Tables 3 and 4. During the OK80-1 cruise length, sex, and otoliths were collected for Pacific hake (*Merluccius productus*) and untagged *S. flavidus* (Tables 5 and 6, respectively). Table 7 describes the rockfish gonad maturity codes which were used when sampling untagged *S. flavidus* (Table 8). Size composition of incidental catches of halibut from the BW80-1 cruise were recorded and are summarized for all hauls in Table 9. Also, a juvenile *S. alutus* sample was collected (Table 10) and a list of their maturity conditions is in Table 11.

TAGGING

Off the southwest coast of Vancouver Island a total of 6,671 rockfish were tagged, of which 6,145 *S. flavidus* and 395 *S. entomelas* were

released (Table 12). Of the total number of released S. flavidus, 129 from San Juan and Ollie Spot were double-tagged with suture tags in order to estimate the percentage of single tags rejected while the fish were at large. Included with the suture tag experiment, 174 S. flavidus were injected with Ringer's saline solution instead of oxytetracycline. The purpose of the saline injection was to check for any extra mortality induced by the oxytetracycline experiments. The number of these latter fish was small, primarily due to the high value of returns of fish injected with oxytetracycline.

In Queen Charlotte Sound and off northwest Vancouver Island 2,893 rockfish were tagged, of which 2,485 S. flavidus, 19 S. entomelas, 12 S. pinniger, and 4 S. brevispinis were released (Table 13). Due to poor weather conditions and low abundance of S. flavidus, no double tagging or control (saline) experiments were conducted during the BW80-1 cruise. Summaries of tag numbers applied by species and locality for both tagging cruises are listed in Tables 14 and 15.

Fish tagged off the southwest coast of Vancouver Island ranged from 23-58 cm in length (Table 16). Analysis of the length frequency histograms indicates three separate size modes for S. flavidus and a single size mode for S. entomelas (Fig. 5). The larger S. flavidus tagged were from Ollie Spot (mode 48 cm) and Big Bank (mode 43 cm). The S. flavidus tagged at San Juan showed a bimodal size distribution (38 and 49 cm). The first size mode at 38 cm was the same size mode as fish tagged at Finger Bank. The S. entomelas tagged at San Juan were also small fish (mode 35 cm). These similarities were also reported by Harling et al. (1967), where juvenile S. flavidus (mode 28 cm) were caught in Barkley Sound. The S. flavidus caught from San Juan, as mentioned before, showed a second size mode at 49 cm which coincided with the size mode for fish tagged from Ollie Spot. If this length frequency is characteristic of the stock, then this might suggest a movement of adult fish between the two areas and that San Juan might be a spawning area and/or a nursery area for juvenile S. flavidus. However, this is speculative and corroboration of the tag return results is needed.

During the second tagging cruise more species of rockfish were tagged but again the majority were S. flavidus. The tagged S. flavidus ranged in length from 27-58 cm (Table 17). Analysis of the length frequency histogram for the Topknot locality shows two prominant modes at 34 and 48 cm. The larger single mode was the same for fish tagged from the other three localities studied (Fig. 6).

MORTALITY

The mortality of rockfishes during both cruises was summarized as pre-tagging and post-tagging mortality. The mortality between initial placement into the anaesthetic tank and the beginning of tagging is defined as pre-tagging mortality and as such reflects mortality due to the initial trauma of the capture procedure. The pre-tagging mortality results are

summarized by species for each haul during both tagging cruises in Tables 18 and 19. The average pre-tagging mortality for all species and areas during the OK80-1 cruise was 5%, with a species range of 0-12%, and 21% with a species range of 0-79% for BW80-1 (Table 20). The increase in these mortality estimates is probably due to the duration of the tows, stamina difference between rockfish species, rough weather in Queen Charlotte Sound (which slowed the process of hauling the net aboard), and trawling procedures. In this latter case, large lifts were brought aboard resulting in additional abrasion and crushing of the fish inside the net. An attempt to tag some S. alutus on the second cruise proved unsuccessful as they were in very poor condition and suffered from severe barotrauma. Even when there was no apparent gas problem the pre-tagging mortality for S. alutus was still 100%.

The post-tagging mortalities were assessed as Type I (died at release after 1 hr in the recovery tank) and Type II (died overnight in recovery tank) after Leaman et al. (1979). The post-tagging mortality results are summarized by mortality type and by cruise in Table 21. The total Type I mortality for all areas for OK80-1 was 1.9% for all species combined; by species, the mortality was 0.4% for S. entomelas and 1.4% for S. flavidus. For BW80-1, the total Type I mortality for all areas was 12.9% for all species combined; by species, the mortality was 10.8% for S. flavidus and 71.4% for S. brevispinis. Listings of Type I mortality by species and by haul for OK80-1 and BW80-1 are on Tables 22 and 23, respectively. On both cruises, the higher mortality rates were generally associated with the smaller samples for those species tagged. It was noted for both tagging cruises that no decreasing trend in Type I mortality was apparent with continual tagging from additional hauls. This implies that the mortality is not related to experience in the handling and tagging procedures.

Type II mortality was significantly higher than Type I mortality for most of the species tagged. During the OK80-1 cruise, ten experiments were conducted on tagged fish held overnight (Table 24). The total mortality for tagged fish kept overnight was 5.0%, with S. flavidus having the lowest mortality rate of 4.3%. The higher mortality rate for S. entomelas (9.6%) is probably not representative since it is based on only one tow where fish were held in the anaesthetic tank for an unusually long period of time due to malfunctions of the tagging guns. On the BW80-1 cruise only 2 such experiments were conducted since adverse weather conditions prevented additional attempts (Table 25). In this case, the total Type II mortality of tagged rockfish was 60.2%, with S. flavidus having the lowest mortality rate of 5.0%. This is in contrast to the higher mortality rates of 63.0% for S. pinniger and 74.3% for S. entomelas.

The relatively high Type II mortality rates for most of the rockfish species tagged during both cruises (and particularly in BW80-1) might be attributed to any of three factors. First, for some species, the number of fish taken as a tagging sample was very small and the resulting mortality estimates are probably not representative. Secondly, a major problem with the fish held in the anaesthetic and recovery tanks for any period of time was the phenomenal loss of scales due to abrasion, which was accentuated by the heaving and rolling motion of the vessel. Finally, the trauma could have been exacerbated by the seasonal variation in surface

water temperatures at time of tagging. The surface water temperature in Queen Charlotte Sound (x = 14.9°C) was warmer than off southwest Vancouver Island (x = 11.9°C).

During the OK80-1 cruise, 129 S. flavidus were double-tagged and both Types I and II mortality were observed. The size composition of double-tagged S. flavidus is shown in Table 26. Although this tagging method was very time consuming, the longer handling time did not increase the Type I mortality at release: 1.6% for double-tagged fish versus 1.8% for single-tagged fish. No mortalities occurred with double-tagged fish held overnight, however very few fish were subjected to this experiment.

During the OK80-1 cruise the mortality effects for which oxytetracycline might be responsible were investigated using saline injection as a control (Table 27). It appeared that short-term effects were negligible since the combined Types I and II mortality for S. flavidus was 1.7% as compared with 1.8% for the fish injected with OTC.

Additional information on the condition and types of injuries, which might shed some light on the factors affecting long-term survival of the released, tagged rockfish was collected at release. This was a time consuming operation since release of the fish was done serially and not in a group. Table 28 describes the injury and condition codes used for the rockfish. In most cases, the tagged rockfish had more than one injury, or multiple injuries. The results of all injuries that were encountered during both cruises are summarized in Tables 29 and 30. The most frequent injury recorded during both tagging cruises was scale loss. During the BW80-1 cruise 24.3% of the tagged fish had scale loss, which was more than the 13.1% for OK80-1 cruise. The term "condition" described the fish as either being good, weak, floater or sinker. Summaries of the conditions encountered during both cruises are in Tables 31 and 32. A fish judged to be in "good" condition was identified by the following characteristics: displaying a normal righting response while in the recovery tank, not limp or docile while being handled in the dipnet, having clear eyes and few to no injuries, orienting itself when placed overboard, and swimming immediately to the bottom. The term "floaters" refers to fish floating at the surface when placed overboard and either displaying limited or no movement. The term "sinkers" refers to the fish sinking to the bottom without any observable movement, when placed overboard. It is important to know the number and type of injuries included with the condition type of the fish at time of release since that information can be related to the same fish when they are eventually recovered. The information from the tag returns will determine which condition and subsequent injury type will allow for a higher survival rate and a better estimate of the viable tags at large. This information may ultimately be used to assign probabilities of recapture, by injury category.

This technique was successful for Leaman et al. (1979), when recoveries of tagged Pacific cod initially recorded as in "good" condition at time of release were significantly greater than the fish judged as being in a "weak" condition. During the OK80-1 and BW80-1 cruises, the percentages of fish released in "good" condition were 92% and 72%, respectively. These differences reflect the problems that have been previously mentioned.

An important aspect of the entire tagging operation is to estimate the total number of viable tags at large. This estimate is presented here as a range of values, by species, for each cruise. The method of calculating the upper range of the estimate was to apply a Type II mortality value to the number of released fish which were not held overnight. To this figure must be added the total number of released fish that were held overnight (Leaman et al. 1979). The lower range of the estimate was obtained by incorporating an additional mortality value which is derived from those fish classified as either "floaters" or "sinkers" at the time of release during both Types I and II mortality experiments (Table 33). Actual figures resulting from mortalities induced by the fish floating or sinking at time of release are unknown, however it is assumed that the fish, in either of these conditions, will have a lower survival rate than fish being in "good" condition. The range of estimates of viable tags at large are:

OK80-1

S. flavidus	5,639-5,881
S. entomelas	339-357

BW80-1

S. flavidus	2,342-2,361
S. entomelas	5-19
S. pinniger	4-12
S. brevispinis	1-4

ACKNOWLEDGMENTS

We are extremely grateful to Capt. Jack Egeland and the crew of the M/V OCEAN KING and Capt. Don Vaccher and the crew of the M/V BLUE WATERS for their enthusiastic cooperation and welcome assistance.

Both tagging cruises were funded in part by the Ministry of Environment, Province of British Columbia.

REFERENCES

Beamish, R. J., C. Wood, and C. Houle. 1978. A summary of sablefish tagging studies conducted during 1977. Fish. Mar. Serv. Data Rep. 77: 103 p.

Beamish, R. J., C. Houle, C. Wood, and R. Scarsbrook. 1979. A summary of sablefish tagging and exploratory trapping studies conducted during 1978 by the Pacific Biological Station. Can. Data Rep. Fish. Aquat. Sci. 162: 113 p.

Gotshall, D. W. 1964. Increasing tagged rockfish (Genus Sebastodes) survival by deflating the swimbladder. Cal. Fish. Game 50(4): 253-260.

Harling, W. R., D. Davenport, and S. J. Westrheim. 1967. G.B. REED Groundfish cruise no. 67-1, February 1 to April 24, 1967. Fish. Res. Board Can. Tech. Rep. 22: 56 p.

Kobayashi, S., R. Yuki, T. Furui, and T. Kosugiyama. 1964. Calcification in fish and shellfish--I. Tetracycline labelling patterns on scale, centrum and otolith in young goldfish. Bull. Jpn. Soc. Sci. Fish. 30: 6-13.

Kelly, G. F., and A. M. Barker. 1961. Observations on the behavior, growth, and migration of redfish at Eastport, Maine. Rapp. Cons. Explor. Mer. 150: 263-275.

1963a. Estimation of population size and mortality rates from tagged redfish, Sebastes marinus (L.), at Eastport, Maine. Spec. Publ. ICNAF (4): 204-209.

1963b. Effect of tagging on redfish growth rate at Eastport, Maine. Spec. Publ. ICNAF (4): 210-213.

Leaman, B. M., D. A. Nagtegaal, and J. E. Smith. 1979. A pilot tagging study of Pacific cod in Georgia Strait, January 17-February 2, 1978. Fish. Mar. Serv. MS Rep. 1516: 57 p.

Phillips, J. B. 1964. Life history studies on ten species of rockfish (Genus Sebastodes). Calif. Dep. Fish Game Fish Bull. 126: 70 p.

Sandeman, E. J., and E. I. S. Rees. 1963. Some notes on the tagging of redfish, Sebastes marinus (L.) from deep water. Spec. Publ. ICNAF (4): 300-305.

Weber, D. D., and G. J. Ridgway. 1962. The deposition of tetracycline drugs in bones and scales of fish and its possible use for marking. Prog. Fish-Cult. October: 150-155.

Westrheim, S. J. 1958. On the biology of the Pacific ocean perch, Sebastodes alutus (Gilbert). M.Sc. Thesis, Univ. Washington 106 pp.

1970. Survey of rockfish, especially Pacific ocean perch in the Northeast Pacific Ocean, 1963-66. J. Fish. Res. Board Can. 27(10): 1781-1809.

1973. Age determination and growth of Pacific ocean perch (Sebastes alutus) in the Northeast Pacific Ocean. J. Fish. Res. Board Can. 30: 235-247.

Wild, A., and T. J. Foreman. 1980. The relationship between otolith increments and time for yellowfin and skipjack tuna marked with tetracycline. Inter-Amer. Trop. Tuna Comm. Bull. 17(7): 509-560.

Table 1. Total catch by vessel and by species during the 1980 tagging cruises (common names in Appendix Table 8).

M/V OCEAN KING		
Species	Weight (kg)	Percent
Sebastes flavidus	20,514	37.44
Merluccius productus	12,530	22.87
S. entomelas	9,215	16.82
Clupea harengus pallasi	4,237	7.73
Theragra chalcogramma	4,210	7.68
Squalus acanthias	1,910	3.49
S. proriger	1,580	2.88
Trace[a]	593	1.09
Total	55,149	100.0

M/V BLUE WATERS		
Species	Weight (kg)	Percent
S. flavidus	27,585	49.17
S. brevispinis	9,588	17.09
Anoplopoma fimbria	6,577	11.72
Atheresthes stomias	3,796	6.77
S. entomelas	3,484	6.21
S. paucispinis	842	1.50
Gadus macrocephalus	782	1.39
Rajidae	757	1.35
Trace[a]	2,687	4.80
Total	56,097	100.0

[a] All species which are <1% of the total catch.

Table 2. Surface salinity samples collected in Area 5A by M/V BLUE WATERS, August 8-22, 1980.

Station no.	Date	North latitude	West longitude	Salinity ‰	Area
5	Aug. 12	50°24'	128°02'	32.424	South Cape Scott
6	Aug. 12	50°21.5'	128°06.5'	32.339	South Cape Scott
7	Aug. 12	50°18'	128°12.5'	32.040	South Cape Scott
8	Aug. 12	50°13'	128°22'	32.331	South Cape Scott
1	Aug. 17	51°07'	128°20'	31.308	Stump Ranch
2	Aug. 17	51°15'	128°40'	31.529	Cape Scott
3	Aug. 17	51°18.5'	129°00'	31.525	SE Corner, G.I.G.
4	Aug. 17	51°13'	129°17'	31.436	SE Corner, G.I.G.

Table 3. Biological samples collected, M/V OCEAN KING, May 23-June 12, 1980. (Numbers of fish sampled.)

Species	Number of fish sampled			
	L/S/mat	L/S/O/mat[a]	L/S/O[b]	Haul no.
Merluccius productus	-	-	322	43
Sebastes flavidus	232	200	-	47, 48, 55
Total	232	200	322	

[a] L/S/O/mat: double otolith sample
[b] L/S/O: otolith jar sample

Table 4. Biological samples collected, M/V BLUE WATERS, August 8-22, 1980. (Numbers of fish sampled.)

Species	L/S/O/Mat[a]	L/S	Haul no.
S. alutus	100	86	56

[a]Double otolith sample.

Table 5. Size composition of Pacific hake, M/V OCEAN KING, May 23-June 12, 1980. (Otoliths were collected from all fish and placed into two jars, one for each sex.)

Locality: Ollie Spot

Date: June 5, 1980

Haul no. 43

Net Depth (m): 88-91[a]

Length (cm)	M	F	T
41	-	1	1
42	-	0	0
43	-	0	0
44	-	0	0
45	-	2	2
46	-	1	1
47	-	0	0
48	2	1	3
49	1	3	4
50	4	3	7
51	3	19	22
52	9	15	24
53	6	30	36
54	4	29	33
55	4	34	38
56	4	36	40
57	3	26	29
58	1	13	14
59	2	16	18
60	0	14	14
61	0	11	11
62	0	11	11
63	0	6	6
64	0	1	1
65	0	2	2
66	1	2	3
67	0	1	1
68	0	1	1
69	1	-	1
Total	45	278	323

[a] Depth of headline rope.

Table 6. Size composition of untagged *S. flavidus*, M/V OCEAN KING, May 23–June 12, 1980.

Locality:	Ollie Spot						San Juan	
Date:	June 8		June 8		Total		June 11	
Haul no.:	47		48				55	
Length (cm)	M	F	M	F	M	F	M	F
31	–	–	–	–	–	–	2	–
32	–	–	–	–	–	–	3	4
33	–	–	–	–	–	–	1	1
34	–	–	–	–	–	–	3	4
35	1	–	–	–	1	–	7	4
36	1	–	–	1	1	1	11	9
37	2	–	1	0	3	0	10	6
38	0	3	0	1	0	4	11	11
39	2	1	1	0	3	1	18	21
40	1	0	2	3	3	3	11	8
41	5	1	1	1	6	2	4	9
42	5	1	4	1	9	2	5	6
43	6	3	7	3	13	6	2	1
44	4	4	9	1	13	5	1	2
45	8	4	9	3	17	7	2	0
46	8	1	7	5	15	6	2	1
47	7	2	14	3	21	5	3	0
48	4	1	14	5	18	6	1	0
49	8	2	13	5	21	7	6	0
50	2	1	4	4	6	5	4	2
51	–	1	0	5	0	6	1	1
52	–	1	0	3	0	4	1	–
53	–	2	0	5	0	7	–	–
54	–	0	1	2	1	2	–	–
55	–	1	–	1	–	2	–	–
56	–	1	–	–	–	1	–	–
Total	64	30	87	52	151	82	109	90
% males	68		63		65		55	
Net depth(m)[a]	110		110				75	

[a] Depth of headline rope.

Table 7. Description of rockfish maturity stages[a].

Maturity code		Gonad condition
	1	IMMATURE (translucent; males, stringlike; females, small)
FEMALES:	2	MATURING (small, yellow eggs; translucent or opaque)
	3	MATURE (large, yellow eggs; opaque)
	4	FERTILIZED (large, orange-yellow eggs; translucent)
	5	EMBRYOS or LARVAE (includes eyed eggs)
	6	SPENT (large, flaccid, red ovaries. A few larvae may be present)
	7	RESTING (moderate size, firm, red-grey ovaries)
MALES:	8	MATURE (ribbon-like; small brown to large white)
	8A	RESTING (ribbon-like; small, brown)
	8B	DEVELOPING (swelling; brown-white)
	8C	DEVELOPED (large, white; easily broken)
	8D	RUNNING (running sperm)
	8E	SPENT (flaccid, red)
	9	MATURING (stringlike, translucent, white)

[a]Slightly modified version of the stages described by Harling (1971). In *Sebastes flavidus* an intermediate stage, characterized by small white testes, exists between the resting (8A) and the developing (8B) stages. Some color variations also occur in the female maturing stage (2). *S. reedi* ovaries exhibit small orange eggs while *S. aleutianus* and *S. brevispinis* eggs are small and pinkish in color.

Table 8. Rockfish maturities collected on M/V OCEAN KING, May 23-June 12, 1980. (See Table 7 for description of rockfish maturity stages.)

SPECIES: *S. flavidus*
LOCALITY: Ollie Spot
DATE: June 8, 1980
HAUL: 47
NET DEPTH[a] (m): 110

	MALE								FEMALE						
CONDITION	1	9	8	8A	8B	8C	8D	8E	1	2	3	4	5	6	7
LENGTH (cm)															
35	1														
36		1													
37	2														
38														1	2
39				2										1	
40								1							
41				4	1									1	
42				3	2										1
43				1	5									1	2
44				1	2			1						1	3
45				3	5									2	2
46				3	5									1	
47				1	6									2	
48					4									1	
49					7			1						2	
50				1	1										1
51														1	
52														1	
53														2	
54															
55														1	
56														1	
SUB TOTAL	3	1		19	38			3						19	11
% MATURITY	5	1		30	59			5						63	37
TOTAL				64								30			
SEX RATIO				68%								32%			

[a]Depth of headline rope

Table 8. Cont'd.

SPECIES: S. flavidus
LOCALITY: Ollie Spot
DATE: June 8, 1980
HAUL: 48
NET DEPTH[a] (m): 110

	MALE								FEMALE						
CONDITION	1	9	8	8A	8B	8C	8D	8E	1	2	3	4	5	6	7
LENGTH (cm)															
35															
36									1						
37				1											
38									1						
39				1											
40				2						1				2	1
41				1											1
42		1		3											1
43				5	2										3
44				5	4										1
45				6	3									1	3
46				2	3			1						1	4
47				7	7									1	2
48				7	4			3						3	2
49				5	5			3						4	1
50				2	2									4	
51								1						2	2
52														2	1
53														4	1
54					1									1	1
55															
SUB TOTAL		1		47	31			8	2	1				25	24
% MATURITY		1		54	36			9	4	2				48	46
TOTAL				87								52			
SEX RATIO				62%								38%			

[a]Depth of headline rope.

Table 8. Cont'd.

SPECIES: *S. flavidus*
LOCALITY: San Juan
DATE: June 11, 1980
HAUL: 55
NET DEPTH[a] (m): 75

	MALE								FEMALE						
CONDITION	1	9	8	8A	8B	8C	8D	8E	1	2	3	4	5	6	7
LENGTH (cm)															
30															
31	1			1											
32	1	1								2					3
33	1														1
34				3						2					2
35	1	2		4						1					3
36		1		10						2				1	6
37				10											6
38				11						2					9
39				17						1				2	18
40				10										1	7
41				4											9
42				4											6
43				2											1
44															2
45				2											
46				1										1	
47				2											
48				1											
49				4				1							
50				1										1	1
51				1											1
52								1							
53															
SUB TOTAL	4	4		88				2		10				6	75
% MATURITY	4	4		90				2		11				7	82
TOTAL				98								91			
SEX RATIO				52%								48%			

[a]Depth of headline rope.

Table 9. Size compositon of halibut, M/V BLUE WATERS, August 8-22, 1980.

Locality:	SE Corner Goose Is. Gully	Cape Scott Spit
Fork Length (cm)		
45	-	1
-	-	0
-	-	0
54	1	0
55	0	0
56	0	0
57	0	0
58	1	2
59	0	1
60	0	2
61	0	0
62	3	2
63	3	0
64	0	2
65	0	0
66	0	0
67	1	0
68	1	4
69	0	0
70	0	1
71	0	1
72	1	0
73	2	1
74	1	1
75	0	1
76	1	0
77	0	0
78	1	0
79	0	0
80	0	0
81	0	1
82	2	-
-	0	-
-	0	-
102	1	-
Total	19	20

Table 10. Size composition of Pacific ocean perch (*Sebastes alutus*), M/V BLUE WATERS, August 8-22, 1980.

Locality: SE Corner Goose Is. Gully
Date: August 20, 1980
Haul no.: 56

Fork Length (cm)	M	F	T
19	1	2	3
20	7	11	18
21	37	34	71
22	36	23	59
23	2	3	5
24	0	1	1
25	3	0	3
26	1	2	3
27	0	1	1
28	2	1	3
29	2	3	5
30	3	5	8
31	1	1	2
32	0	0	0
33	1	0	1
34	0	0	0
35	0	0	0
36	1	0	1
37	0	1	1
38	1	-	1
Total	98	88	186
Depth (m)[a]			175

[a]Depth of headline rope.

Table 11. Rockfish maturity data collected on M/V BLUE WATERS, August 8-22, 1980.
SPECIES: *S. alutus*
LOCALITY: SE Corner Goose Is. Gully
DATE: August 20, 1980
HAUL: 56
NET DEPTH[a] (m): 175

	MALE								FEMALE						
CONDITION	1	9	8	8A	8B	8C	8D	8E	1	2	3	4	5	6	7
LENGTH (cm)															
19	1								1						
20	3								5						
21	23								18						
22	24								12						
23	1														
24															
25	1														
26									1	1					
27															
28	1														
29	1								1	1					
30	1									1	1				
31	1														
32															
33															
34															
35															
36															
37											1				
SUB TOTAL	57								38	3	2				
% MATURITY	100								88	7	5				
TOTAL				57								43			
SEX RATIO				57%								43%			

[a]Depth of headline rope.

Table 12. Summary of tagged rockfish by locality. M/V OCEAN KING, May 23–June 12, 1980.

Species	Locality	No. hauls	No. OTC injected	No. saline injected	No. double tagged	Dead[a]	No. released
S. flavidus	Big Bank	21	2065	–	–	49	2016
S. flavidus	Finger Bank	8	642	–	–	10	632
S. flavidus	Ollie Spot	21	2892	132	99	38	2986
S. flavidus	San Juan	5	486	42	30	17	511
Subtotal		55	6085	174	129	114	6145
S. entomelas	Finger Bank	2	412	–	–	17	395
Total		57	6497	174	129	131	6540

[a] Includes fish that died upon release one hour after tagging and those that died at release the following day.

Table 13. Summary of tagged rockfish by locality, M/V BLUE WATERS, August 8-22, 1980.

Species	Locality	No. hauls	No. OTC injected	Dead[a]	No. released
S. flavidus	Triangle Is.	2	359	26	333
S. flavidus	Topknot	6	326	28	298
S. flavidus	Cape Scott Spit	2	184	2	182
S. flavidus	SE corner, Goose Is. Gully	16	1917	245	1672
Subtotal		26	2786	301	2485
S. entomelas	Topknot	1	46	28	18
S. entomelas	SE corner, Goose Is. Gully	1	28	27	1
Subtotal		2	74	55	19
S. brevispinis	SE corner, Goose Is. Gully	1	14	10	4
S. pinniger	Topknot	1	19	7	12
Total		30	2893	373	2520

[a]Includes fish that died upon release one hour after tagging and those that died at release the following day.

Table 14. Summary of tag indentification numbers released by species and by locality, M/V OCEAN KING, May 23-June 12, 1980.

Locality	Species	Tag identification no.	No. released
Big Bank/ Finger Bank	*S. flavidus*	R107,000-R107,595 R108,090-R110,546 R113,517-R113,524 R113,531-R113,698	2648
Finger Bank	*S. entomelas*	R107,596-R108,089	395
Ollie Spot	*S. flavidus*	R110,547-R113,516 R113,525-R113,530	2986
San Juan	*S. flavidus*	R113,699-R114,255 R114,275-R114,278	511

Table 15. Summary of tag identification numbers released by species and by locality, M/V BLUE WATERS, August 8-22, 1980.

Locality	Species	Tag identification no.	No. released
Triangle Island	*S. flavidus*	R8115155-R8115555	333
Topknot	*S. flavidus*	R8106004-R8106313 R8106325-R8106328	298
	S. pinniger	R8106314-R8106324 R8106329-R8106335 R8106350-R8106351	7
Cape Scott Spit	*S. entomelas*	R8106339-R8106349 R8106375-R8106382 R8115135-R8115149 R8115556-R8115637 R8115650-R8115746 R8115750-R8115752 R8116170-R8116172 R8116196-R8116199 R8116201-R8116224 R8116226-R8116346 R8116350-R8116369 R8116500-R8116524	182
SE Corner G.I.G.	*S. brevispinis*	R8114686 R8114688-R8114689 R8114693	4

Table 15 (cont'd)

Locality	Species	Tag identification no.	No. released
SE Corner G.I.G.	*S. entomelas*	R8106383-R8106399 R8106428-R8106436 R8106438-R8106439	19
	S. flavidus	R8106437 R8106440-R8106689 R8106693-R8106973 R8106975-R8106999 R8114257-R8114258 R8114260-R8114274 R8114279-R8114553 R8114555-R8114685 R8114687 R8114690 R8114694-R8114999 R8115000-R8115133 R8115150-R8115154 R8115747-R8115749 R8115753-R8115999 R8116000-R8116011 R8116013-R8116169 R8116175-R8116195	1,672

Table 16. Size composition of tagged[a] rockfish, M/V OCEAN KING, May 23-June 12, 1980.

	S. flavidus				
Locality:	Finger Bank				
Date:	May 26	May 27	May 27	May 28	May 28
Haul no.:	7	8	9	13	14
Fork length (cm)					
23	-	-	-	-	-
24	-	-	-	-	-
25	-	1	-	-	-
26	-	0	-	-	-
27	-	0	-	-	-
28	-	1	-	-	-
29	-	0	2	-	-
30	-	3	6	1	2
31	-	3	8	0	0
32	1	6	18	0	1
33	0	13	34	1	3
34	0	12	19(1)	1	6
35	0	18	38	4	1
36	0	18	19(1)	2	5
37	0	20	23	4	3(1)
38	1	25	23	5	4
39	0	21(1)	23	14	8
40	2	12	14	7(2)	10
41	0	11	11	8	4
42	0	13	1	7(2)	4
43	0	6(1)	4	6(1)	4
44	0	3	1	2	5
45	0	4	2	3	4
46	2	1	1	1	2
47	1	1	1	1	3
48	1	0	2	0	2
49	0	0	-	0	1
50	1	0	-	2	-
51	-	1	-	1	-
52	-	-	-	0	-
53	-	-	-	1	-
54	-	-	-	-	-
55	-	-	-	-	-
56	-	-	-	-	-
57	-	-	-	-	-
58	-	-	-	-	-
Total	9	193(2)	250(2)	71(5)	72(1)
Net depth(m)[b]	91-91	71-73	73-82	66	62-71

[a]Live releases, numbers of dead at release in parenthesis.
[b]Depth of headline rope.
[c]Fish from haul 45[b]held in net for approximately 3 hours before tagging.

Table 16 (cont'd)

	S. flavidus				
Locality:	Finger Bank		Big Bank		
Date:	May 28		May 26	May 29	May 29
Haul no.:	16	Total	6	17	18
Fork length (cm)					
23	-	-	1	-	-
24	-	-	0	-	-
25	-	-	0	-	-
26	-	1	0	-	-
27	-	0	0	-	-
28	-	0	0	-	-
29	-	1	0	-	-
30	-	2	0	-	-
31	-	12	0	1	-
32	-	11	0	0	-
33	2	26	0	1	-
34	1	53	0	3	-
35	2	39(1)	4	5	-
36	5	63	5	8	-
37	7	49(1)	2	6	1
38	6	57(1)	7	5	2
39	2	64	7	9	3
40	3	68(1)	10	18	3
41	5	48(2)	4	15(1)	4(1)
42	0	39	4	12(2)	6(2)
43	1	25(2)	5	3	16
44	0	21(2)	3	10	15
45	0	11	3	4	33(1)
46	0	13	0	7	11
47	1	7	1	1	18(1)
48	1	8	3	2	8
49	1	6	-	4	4
50	-	2	-	0	5
51	-	3	-	0	2
52	-	2	-	0	4
53	-	0	-	1	0
54	-	1	-	-	2
55	-	-	-	-	1
56	-	-	-	-	-
57	-	-	-	-	-
58	-	-	-	-	-
Total	37	632(10)	59	115(3)	138(5)
Net depth(m)[b]	66		55-62	91-77	73-77

Table 16 (cont'd)

	S. flavidus				
Locality:	Big Bank				
Date:	May 29	May 30	May 30	May 30	May 30
Haul no.:	19	20	21	22	23
Fork length (cm)					
23	-	-	-	-	-
24	-	-	-	-	-
25	-	-	-	-	-
26	-	-	-	-	-
27	-	-	-	-	-
28	-	-	-	-	-
29	-	-	-	-	-
30	-	-	-	-	-
31	1	-	-	-	-
32	1	-	-	-	2
33	0	-	-	-	0
34	0	-	-	-	1
35	4(4)	2	-	-	2
36	5(2)	1	-	1	7
37	5(2)	1	-	0	16
38	13	0	1	3	12
39	14(1)	3	0	5	14
40	24(3)	2	2	7	21
41	17(4)	9	0	4	27
42	17(1)	8	0	9(1)	28
43	20(3)	21	1	7	22
44	8	17	0	11	15
45	5	17(2)	4	10	8
46	12	25	3	13	8
47	7	10	3	3	4
48	4	13	0	5	7
49	1	4	0	6	4
50	2	3	3	1	0
51	1	3	1	0	3
52	1	2	1	0	0
53	1	2	-	0	1
54	-	2	-	1	0
55	-	1	-	0	0
56	-	0	-	1	0
57	-	1	-	-	1
58	-	-	-	-	-
Total	163(20)	147(2)	19	87(1)	203
Net depth(m)[b]	73-82	95-77	77-80	88	77-84

Table 16 (cont'd)

	S. flavidus				
Locality:	Big Bank				
Date:	May 31	May 31	May 31	June 2	June 2
Haul no.:	24	25	27	28	29
Fork length (cm)					
23	-	-	-	-	-
24	-	-	-	-	-
25	-	-	-	-	-
26	-	-	-	-	-
27	-	-	-	-	-
28	-	-	-	-	-
29	-	-	-	-	-
30	-	-	-	-	-
31	-	-	-	-	-
32	-	-	-	-	-
33	2	1	-	-	-
34	0	6	-	-	2
35	0	7	-	1(1)	4
36	4	15	1	0	3
37	6	21(1)	1	2	5
38	12	20(1)	0	2	6
39	15	21(1)	0	3	16
40	16(1)	32	0	7	12
41	16	23	2	6	16
42	17	17	1	12	7
43	18(1)	17(1)	1	9(2)	12(2)
44	9	8	0	15	16
45	13	6	0	33	11
46	8	7(1)	0	26	14
47	7	4	1	19	12
48	5	7	0	6	9
49	4(1)	2	0	6	5
50	4	-	1	4	2
51	2	-	0	1	2
52	1	-	1	5	0
53	1	-	-	1	1
54	1	-	-	1	1
55	0	-	-	1	1
56	1	-	-	1	-
57	1	-	-	-	-
58	-	-	-	-	-
Total	163(3)	214(5)	9	161(3)	157(2)
Net depth(m)[b]	82-75	69-77	66-73	88-66	88-73

Table 16 (cont'd)

	S. flavidus				
Locality:	Big Bank			Ollie Spot	
Date:	June 3	June 3		June 3	June 4
Haul no.:	30	31	Total	33	34
Fork length (cm)					
23	-	-	1	-	-
24	-	-	0	-	-
25	-	-	0	-	-
26	-	-	0	-	-
27	-	-	0	-	-
28	-	-	0	-	-
29	-	-	0	-	-
30	-	-	0	-	-
31	1	-	3	-	-
32	0	-	3	-	-
33	1	2	7	-	-
34	1	5	18	-	-
35	16(1)	9	54(6)	-	-
36	5	10	65(2)	-	2
37	11(1)	10	87(4)	-	0
38	13(1)	16	112(2)	-	1
39	19	13	142(2)	2	3
40	25	16	195(4)	4	2
41	18	15	176(6)	10	6
42	18(1)	15	171(7)	10	4(1)
43	22(1)	20	194(10)	9	7
44	9	5	141	19	10
45	13	10	170(3)	19	8
46	4	7	145(1)	16	10
47	7	9	106(1)	25(1)	11
48	6	6	81	24	7
49	4	4	48(1)	14(1)	10
50	4	5	34	12	3
51	2	0	17	4	1
52	1	1	17	6	1
53	0	0	8	2	3
54	0	0	8	4	-
55	0	0	4	-	-
56	2	1	6	-	-
57	-	-	3	-	-
58	-	-	-	-	-
Total	202(5)	179	2016(49)	180(2)	89(1)
Net depth(m)[b]	73-75	73-75		82-88	73-53

Table 16 (cont'd)

	S. flavidus				
Locality:	Ollie Spot				
Date:	June 4	June 4	June 4	June 4	June 4
Haul no.:	35	36	37	38	39
Fork length (cm)					
23	-	-	-	-	-
24	-	-	-	-	-
25	-	-	-	-	-
26	-	-	-	-	-
27	-	-	-	-	-
28	-	-	-	-	-
29	-	-	-	-	-
30	-	-	-	-	-
31	-	-	-	-	-
32	-	-	-	-	-
33	-	-	-	-	-
34	-	-	-	-	-
35	-	-	-	-	-
36	1	-	-	-	-
37	0	-	-	-	-
38	0	-	2	-	-
39	1	-	0	-	1
40	0	-	1	3	1
41	1	1	1	3	4
42	1	0	3	5	6
43	7	0	5	3	7
44	7	3	4	6	11
45	3	1	12	25	20(1)
46	2(1)	2	17	18	28
47	9	4	10(1)	30	32
48	3	4	19	12(1)	23
49	7	1	16	12	22(1)
50	1	2	10	14	13
51	4	0	8	4	6
52	0	0	7	7	9
53	0	1	2	1	4
54	2	1	2	1	2
55	-	-	2	1	3
56	-	-	1	2	-
57	-	-	-	-	-
58	-	-	-	-	-
Total	49(1)	20	122(1)	147(1)	192(2)
Net depth(m)[b]	101-121	88-99	88-97	80	84-79

Table 16 (cont'd)

	S. flavidus				
Locality:	Ollie Spot				
Date:	June 5	June 5	June 5	June 5	June 5
Haul no.:	40	41	42	43	44
Fork length (cm)					
23	-	-	-	-	-
24	-	-	-	-	-
25	-	-	-	-	-
26	-	-	-	-	-
27	-	-	-	-	-
28	-	-	-	-	-
29	-	1	-	-	-
30	-	0	-	-	-
31	-	0	-	-	-
32	-	0	-	-	-
33	-	0	-	-	-
34	-	1	-	-	-
35	-	0	-	-	-
36	-	0	-	-	1
37	-	1	-	-	0
38	1	0	-	-	0
39	0	0	-	-	1
40	4	0	-	-	1
41	1(1)	1	1	-	3
42	2	2	4	2	3
43	5	3	3	1	8
44	10	9	2	3	15
45	24	12	5	2	24
46	20	17	1	0	23
47	19	8	7	3	21(1)
48	26	14	4	2	25(1)
49	18	10	6	1	16(1)
50	14	9(1)	2	1	12
51	6	1(1)	1	0	13
52	6	4	-	0	4
53	3	0	-	1	6
54	3	2	-	-	3
55	1	1	-	-	1
56	1	-	-	-	1
57	-	-	-	-	1
58	-	-	-	-	-
Total	164(1)	95(2)	36	16	182(3)
Net depth(m)[b]	99	84-95	88-80	88-91	73-84

Table 16 (cont'd)

	S. flavidus				
Locality:	Ollie Spot				
Date:	June 6	June 6	June 6	June 8	June 8
Haul no.:	45a	45b[c]	46	47	48
Fork length (cm)					
23	-	-	-	-	-
24	-	-	-	-	-
25	-	-	-	-	-
26	-	-	-	-	-
27	-	-	-	-	-
28	-	-	-	-	-
29	-	-	-	-	-
30	-	-	-	-	-
31	-	-	-	-	-
32	-	-	0(1)	-	-
33	-	-	0	-	-
34	-	-	0	-	-
35	-	-	1	-	-
36	2	1	0	1	-
37	1	2	0	3	5
38	0	1	2	5	1
39	2	1	1	10	1
40	4	3	5	6	8
41	4(1)	6	1	2	4
42	9	11	8	11	13
43	13	15	8	8	16
44	13	17	14	10	19
45	19	18	29	18(1)	27
46	25	23	26(1)	23	26
47	27	13	24	19	23
48	21	17	31	25(1)	25(1)
49	16	24	22	26	22
50	23	9	16	16	7
51	8	7	8	3	2
52	5	2	3	6	6
53	1	3	3	4(1)	4
54	2	1	5	0	1
55	0	0	1	1	2
56	1	1	-	2	0
57	-	1	-	-	2
58	-	-	-	-	-
Total	196(1)	176	208(2)	200(3)	213(1)
Net depth(m)[b]	77-55	77-55	77-101	110	110

Table 16 (cont'd)

	S. flavidus				
Locality:	Ollie Spot				
Date:	June 9	June 9	June 9	June 10	
Haul no.:	49	50	51	52	Total
Fork length (cm)					
23	-	-	-	-	-
24	-	-	-	-	-
25	-	-	-	-	-
26	-	-	-	-	-
27	-	-	-	-	-
28	-	-	-	-	-
29	-	-	-	-	1
30	-	-	-	-	0
31	-	-	-	-	0
32	-	-	-	-	0(1)
33	-	-	-	-	0
34	-	-	-	-	1
35	-	-	-	-	1
36	-	-	-	-	8
37	-	1	1(1)	1	15(1)
38	1	2	0	0	16)
39	3	3	4	1	34
40	5	2	4	5	58
41	4	3	4	3	63(2)
42	4	4(1)	10	14(1)	126(3)
43	13	12	10(1)	22	175(1)
44	5(1)	16	18(2)	12	223(3)
45	13	28	9(1)	20	336(3)
46	20	33(1)	24(1)	15	369(4)
47	19	27	17(1)	24	372(4)
48	25(1)	28	23(1)	24	381(6)
49	20(1)	20	15(2)	12	310(6)
50	13	13	6	5	201(1)
51	9	6	6	2	99(1)
52	3	3	4	2	78
53	4	5(1)	3	2	52(2)
54	1	1	2	1	34
55	2	1	0	-	16
56	0	0	2	-	11
57	0	1	-	-	5
58	1	-	-	-	1
Total	165(3)	209(3)	162(10)	165(1)	2986(38)
Net depth(m)	[b]128-82	110	80-84	91-84	

Table 16 (cont'd)

	S. flavidus			
Locality:	San Juan			
Date:	June 10	June 10	June 11	Total
Haul no.:	53	54	55	
Fork length (cm)				
23	-	-	-	-
24	-	-	-	-
25	-	-	-	-
26	-	-	-	-
27	-	-	-	-
28	-	-	-	-
29	-	-	-	-
30	-	1	2	3
31	-	3	1	4
32	-	3(1)	1	4(1)
33	-	6	9	15
34	1	11(2)	9	21(2)
35	1	12(1)	13	26(1)
36	1	23	16(1)	40(1)
37	1	21(1)	18	40(1)
38	3	36(2)	36(1)	75(3)
39	2	25(1)	24	51(1)
40	1	27(1)	30(1)	58(2)
41	4	20(1)	8	32(1)
42	0	10(1)	12	22(1)
43	4	6	8(1)	18(1)
44	0	9	1	10
45	3	4	3	10
46	6	0	2	8
47	11	2	6(1)	19(1)
48	7	4	3	14
49	10(1)	4	7	21(1)
50	4	5	1	10
51	3	1	-	4
52	2	0	-	2
53	1	1	-	2
54	1	-	-	1
55	0	-	-	0
56	0	-	-	0
57	0	-	-	0
58	1	-	-	1
Total	67(1)	234(11)	210(5)	511(17)
Net depth(m)[b]	-	91-73	73-77	

Table 16 (cont'd)

	S. entomelas				
Locality:	Finger Bank				
Date:	May 26	May 27	May 27	May 28	
Haul no.:	6	10[d]	10	11	Total
Fork length(cm)					
27	-	-	-	1	1
28	-	-	-	1	1
29	-	1	2	3	6
30	-	0	1	7	8
31	-	1	1	5	7
32	-	2	2	14	18
33	-	7(1)	6	30	43(1)
34	2	12(1)	11(2)	59	84(3)
35	0	16(2)	14	58	88(2)
36	1	11(1)	12(5)	33	57(6)
37	0	10(1)	6(1)	16	32(2)
38	0	5	5(1)	9	19(1)
39	0	5(1)	6	2	13(1)
40	0	2	1	1	4
41	0	1	3	0	4
42	0	2	2	1	5
43	0	1	0	-	1
44	0	1	1	-	2
45	0	-	1	-	1
46	0	-	-	-	0
47	0	-	-	-	0
48	0	-	-	-	0
49	0	-	-	-	0
50	0	-	-	-	0
51	1	-	-	-	1
Total	4	77(7)	74(9)	240(1)[e]	395(17)
Net depth(m)[b]	30-34	46-46		34-40	

[d] All fish did not have air bladders deflated.
[e] Length unknown for fish in parenthesis.

Table 17. Size composition of tagged[a] rockfish, M/V BLUE WATERS, August 8-22, 1980.

	S. flavidus					
Locality:	Triangle Is.			Topknot		
Date:	Aug. 18	Aug. 18		Aug. 11	Aug. 12	Aug. 12
Haul no.:	38	39	Total	6	8	9
Fork length (cm)						
27	-	-	-	-	1	-
28	-	-	-	-	0	-
29	-	-	-	-	0	-
30	-	-	-	-	2	-
31	-	-	-	1	4	-
32	-	-	-	0	4	-
33	-	-	-	0	1	-
34	-	-	-	4	5(1)	-
35	-	-	-	1	2(1)	-
36	-	-	-	1	0	-
37	-	-	-	2	2	-
38	-	-	-	1	4	-
39	-	-	-	0	1	-
40	-	1	1	0	0	-
41	-	1	1	1	1	-
42	2	0	2	0	0	1
43	2	4	6	1	0	1
44	3	10(2)	13(2)	0	1	0
45	7(1)	17	24(1)	3	-	1
46	12(1)	21(1)	33(2)	14(6)	-	4
47	25(5)	34(1)	59(6)	35(4)	-	3
48	26(2)	51(2)	77(4)	43(3)	-	12
49	17(1)	17(2)	34(3)	26(3)	-	14
50	21(2)	17(1)	38(3)	13(4)	-	3
51	14(1)	4	18(1)	10(2)	-	2
52	9(2)	1	10(2)	6(1)	-	0
53	2(1)	1	3(1)	2(1)	-	1
54	11	1	12	1	-	0
55	0(1)	-	0(1)	1	-	0
56	2	-	2	1	-	0
57	-	-	-	-	-	1
58	-	-	-	-	-	-
Total	153(17)	180(9)	333(26)	167(24)	28(2)	43
Net depth (m)[b]	117-115	131		95-79	73-97	95-128

[a]Live releases, numbers of dead at release in parentheses.
[b]Depth of headline rope.

Table 17 (cont'd)

	S. flavidus						
Locality:	Topknot (cont'd)				Cape Scott Spit		
Date:	Aug. 12	Aug. 12	Aug. 12		Aug. 19	Aug. 19	
Haul no.:	10	11	12	Total	44	46	Total
Fork length (cm)							
27	-	-	-	1	-	-	-
28	-	-	-	0	-	-	-
29	-	-	-	0	-	-	-
30	-	-	-	2	-	-	-
31	-	-	-	5	-	-	-
32	-	1	0(1)	5(1)	-	-	-
33	-	1	0	2	-	-	-
34	-	4	0	13(1)	-	-	-
35	-	6	2	11(1)	-	-	-
36	-	6	0	7	-	-	-
37	-	2	0	6	0(1)	-	0(1)
38	-	2	0	7	0	-	0
39	-	3	0	4	1	-	1
40	-	1	0	1	0	-	0
41	-	0	0	2	1	1	2
42	-	0	2	3	2	4	6
43	-	0	0	2	3	2	5
44	-	1	0	2	6	5	11
45	2	0	1	7	9	10	19
46	0	1	4	23(6)	9	7(1)	16(1)
47	1	0	1	40(4)	13	11	24
48	0	4(1)	2	61(4)	12	18	30
49	1	2	2	45(3)	13	17	30
50	1	0	1	18(4)	12	7	19
51	-	1	1	14(2)	6	3	9
52	-	1	1	8(1)	3	2	5
53	-	0	1	4(1)	0	2	2
54	-	1	-	2	1	0	1
55	-	-	-	1	1	1	2
56	-	-	-	1	-	-	-
57	-	-	-	1	-	-	-
58	-	-	-	-	-	-	-
Total	5	37(1)	18(1)	298(28)	92(1)	90(1)	182(2)
Net depth (m)[b]	84-86	60-77	75-137		128-142	140-129	

Table 17 (cont'd)

	S. flavidus					
Locality:	SE Corner--Goose Is. Gulley					
Date:	Aug. 13	Aug. 14	Aug. 14	Aug. 14	Aug. 15	Aug. 16
Haul no.:	17	20	22	23	26	33
Fork length (cm)						
27	-	-	-	-	-	-
28	-	-	-	-	-	-
29	-	-	-	-	-	-
30	-	-	-	-	-	-
31	-	-	-	-	-	-
32	-	-	-	-	-	-
33	-	-	-	-	-	-
34	-	-	-	-	-	-
35	-	-	-	1	-	-
36	-	-	-	0	-	1
37	-	1	-	0	-	0
38	-	0	-	0	-	0
39	-	0	-	0	-	0
40	-	2	1	0	-	0
41	-	0	0	0	-	0
42	-	3	0	0	2	1
43	-	4(2)	1	1(1)	4	1
44	-	6(2)	4(1)	4(1)	9(1)	4(1)
45	-	15(6)	8(4)	7	16(1)	4(1)
46	-	15(17)	17(3)	19	27	18
47	1	36(26)	33(10)	15(1)	30(6)	22(3)
48	-	46(31)	36(5)	20	38(2)	23(1)
49	-	32(36)	25(3)	16(1)	21(4)	15(1)
50	-	17(15)	5(1)	7	5(1)	8
51	-	10(5)	0	3	8(1)	4
52	-	3(2)	1	3	1	1
53	-	0(2)	1	1(1)	3(2)	0
54	-	1(3)	1	2	6	2
55	-	0	-	0	-	-
56	-	1	-	0	-	-
57	-	1	-	0	-	-
58	-	-	-	1	-	-
Total	1	193(147)	133(27)	100(5)	170(18)	104(7)
Net depth (m)[b]	86-99	91-102	110-106	91-75	88-112	138-137

Table 17 (cont'd)

	S. flavidus					
Locality:	SE Corner--Goose Is. Gulley					
Date:	Aug. 16	Aug. 17	Aug. 17	Aug. 17	Aug. 19	Aug. 20
Haul no.:	34	35	36	37	48	50
Fork Length (cm)						
27	-	-	-	-	-	-
28	-	-	-	-	-	-
29	-	-	-	-	-	-
30	-	-	-	-	-	-
31	-	-	-	-	-	-
32	-	-	-	-	-	-
33	-	-	-	-	-	-
34	1	-	-	-	-	-
35	0	-	-	-	1	-
36	0	-	-	-	0	-
37	0	-	-	-	0	-
38	0	-	-	-	0	-
39	0	-	-	-	0	-
40	1	1	-	1	1	-
41	0	0	-	0	0	-
42	2	0	1(1)	0	3	-
43	4	2	4	1	11(2)	2
44	3	3	7	2(1)	12(2)	1
45	6	3	14	10	20(1)	2
46	10	17(1)	15(1)	20(1)	18(2)	7
47	15	18	26(1)	36(2)	33	10
48	14	10	32(2)	30(2)	36(2)	7
49	5	8	19	25(1)	28(1)	4
50	5	2	3	10	12(1)	6
51	0	2(1)	2	2	6(2)	3
52	0	-	1	1	3	-
53	1	-	5	1	5	-
54	0	-	-	1	0	-
55	1	-	-	-	1	-
56	-	-	-	-	-	-
57	-	-	-	-	-	-
58	-	-	-	-	-	-
Total	68	66(2)	129(5)	140(7)	191(13)	42
Net depth (m)[b]	126-128	135-133	135-133	155-142	131-133	138-149

Table 17 (cont'd)

	S. flavidus					*S. pinniger*
Locality:	SE Corner--Goose Is. Gulley					Topknot
Date:	Aug. 20	Aug. 20	Aug. 20	Aug. 20		Aug. 12
Haul no.:	51	54	55	58	Total	12
Fork length (cm)						
27	-	-	-	-	-	-
28	-	-	-	-	-	-
29	-	-	-	-	-	-
30	-	-	-	-	-	-
31	-	-	-	-	-	-
32	-	-	-	-	-	-
33	-	-	1	-	1	-
34	-	-	0	-	1	-
35	-	-	0	-	2	-
36	-	-	0	-	1	-
37	-	-	0	1	2	-
38	-	-	0	0	0	-
39	1	-	0	1	2	-
40	0	1	0	0	8	-
41	2	0	0	3	5	-
42	6	0	0	1	19(1)	-
43	8	1	0	6	50(5)	-
44	9	3	0	10	77(9)	-
45	23(1)	1	1	21	151(14)	-
46	17	0	1(1)	19(3)	220(29)	-
47	13(1)	2	0	34(2)	325(52)	2
48	24(1)	0	3(1)	28(1)	347(48)	0
49	16	1	4	15	234(47)	2
50	13	1	1(1)	10(1)	105(20)	0(2)
51	5(1)	0	0	4	49(10)	1(2)
52	7	1	1	2	25(2)	1(2)
53	3	1	-	2	23(5)	0(3)
54	2	-	-	1	16(3)	0(2)
55	2	-	-	1	5	0(1)
56	-	-	-	1	2	0
57	-	-	-	-	1	0
58	-	-	-	-	1	1
Total	151(4)	12	12(3)	160(7)	1,672(245)	7(12)
Net depth (m)[b]	126-131	128-120	159-149	126-129		75-137

Table 17 (cont'd)

	S. entomelas		*S. brevispinis*
Locality:	Topknot	SE Corner--G.I.G.	SE Corner--G.I.G.
Date:	Aug. 12	Aug. 13	Aug. 16
Haul no.:	12	17	34
Fork length (cm)			
27	-	-	-
28	-	-	-
29	-	-	-
30	-	-	-
31	-	-	-
32	-	-	-
33	-	-	-
34	-	-	-
35	-	-	-
36	-	-	-
37	-	-	-
38	0(1)	-	-
39	0	-	-
40	2(3)	-	0(1)
41	1(2)	-	0
42	1(1)	-	1(1)
43	2(1)	-	0
44	2(1)	-	0
45	1(4)	0(1)	2(1)
46	2(1)	0(1)	0(1)
47	4(2)	0(1)	0
48	1	1(1)	0(2)
49	2(2)	0(4)	0
50	0(3)	0(1)	0(2)
51	0(1)	0(3)	0(1)
52	0	0(3)	0(1)
53	0(2)	0(5)	0
54	0(2)	0(2)	0
55	0(1)	0(4)	1
56	0	0	-
57	0(1)	0(1)	-
58	-	-	-
Total	18(28)	1(27)	4(10)
Net depth (m)[b]	75-137	86-99	126-128

Table 18. Pre-tagging mortalities by species and by haul, M/V OCEAN KING, May 23-June 12, 1980.

Species	Haul	No. tagged	Dead[a]
S. flavidus	6	59	0
	7	9	1
	8	195	0
	9	252	11
	13	76	5
	14	73	0
	16	37	0
	17	118	2
	18	143	3
	19	183	10
	20	149	1
	21	19	0
	22	88	1
	23	203	43
	24	166	20
	25	219	55
	27	9	0
	28	164	13
	29	159	32
	30	207	28
	31	179	7
	33	182	2
	34	90	0
	35	50	1
	36	20	0
	37	123	2
	38	148	0
	39	194	3
	40	165	2
	41	97	0
	42	36	0
	43	16	1
	44	185	5
	45a	197	2
	45b[b]	176	1
	46	210	2
	47	203	4
	48	214	2
	49	168	11

Table 18 (cont'd)

Species	Haul	No. tagged	Dead[a]
S. flavidus	50	212	5
	51	172	3
	52	166	1
	53	68	0
	54	246	42
	55	215	30
Total		6259	351
S. entomelas	4	4	0
	10	167	4
	11	241	4
Total		412	8

[a]Died in anaesthetic tank before tagging.

[b]Fish from haul 45b in net for approximately 3 hours before tagging.

Table 19. Pre-tagging mortalities by species and by haul, M/V BLUE WATERS rockfish tagging cruise, August 8-22, 1980.

Species	Haul no.	No. tagged	Dead[a]
S. flavidus	6	191	19
	8	30	0
	9	43	0
	10	5	0
	11	38	2
	12	19	0
	17	1	0
	20	207	15
	20a[b]	133	30
	22	160	21
	23	105	9
	26	188	74
	33	111	3
	34	68	0
	35	68	5
	36	134	7
	37	148	34
	38	170	11
	39	189	29
	44	93	0
	46	91	2
	48	204	11
	50	42	0
	51	155	5
	54	12	0
	55	15	0
	58	167	18
Total		2,786	295
S. pinniger	12	19	15
S. entomelas	12	46	10
	17	28	0
Total		74	10
S. brevispinis	34	14	2

[a]Died in anaesthetic tank before tagging.
[b]Fish from haul 20a held in net for approximately 3 hours before tagging.

Table 20. Summary of pre-tagging mortalities for OK 80-1 and BW 80-1 tagging cruises.

Cruise	Species	Area	No. tagged	Pre-tagging mortality (%)
OK 80-1	*S. entomelas*	Finger Bank	412	2.0
	S. flavidus	Big Bank (SE edge)	2,065	9.4
		Finger Bank	642	2.6
		San Juan	528	12.0
		Ollie Spot	3,024	1.5
BW 80-1	*S. brevispinis*	S.E. GIG	19	14.0
	S. entomelas	S.E. GIG	28	0
		Top Knot	46	22.0
	S. flavidus	Cape Scott Spit	184	1.1
		S.E. GIG	1,917	13.9
		Top Knot	326	7.0
		Triangle Is.	359	15.0
	S. pinniger	Top Knot	19	79.0

Table 21. Summary of post-tagging mortalities[a] by species for M/V OCEAN KING and M/V BLUE WATERS tagging cruises.

			Post-tagging mortalities				
			Overall	Type I		Type II	
Cruise	Species	No. tagged	dead(%)	No. tagged	Dead(%)	No. tagged	Dead(%)
OK 80-1	*S. entomelas*	412	4.1	245	0.4	167	9.6
	S. flavidus	6,259	1.8	5146	1.4	1,113	4.3
BW 80-1	*S. brevispinis*	14	71.4	14	71.4	0	0
	S. entomelas	74	74.3	0	0	74	74.3
	S. flavidus	2,786	10.8	2,766	10.8	20	5.0
	S. pinniger	19	36.8	0	0	19	63.0

[a]Post-tagging mortalities are defined as:
Type I = died at release after one hour in recovery tank.
Type II = died overnight in recovery tank.

Table 22. Type I mortality[a] by species and by locality, M/V OCEAN KING, May 23-June 12, 1980.

			S. flavidus							
			Dead		Sinkers		Floaters		Total[b]	
Locality	Haul no.	No. tagged	No.	%	No.	%	No.	%	No.	%
Big Bank	6	59	0	-	0	-	0	-	0	-
	17	118	3	2.5	1	.8	2	1.7	6	5.0
	18	143	5	3.5	13	9.0	6	4.2	24	16.8
	20	149	2	1.3	0	-	7	4.7	9	6.0
	21	19	0	-	0	-	0	-	0	-
	22	88	1	1.1	0	-	8	9.0	9	10.2
	23	203	0	-	4	1.9	0	-	4	1.9
	24	166	3	1.8	2	1.2	11	6.6	16	9.6
	25	219	5	2.3	0	-	14	6.4	19	8.7
	27[c]	9	0	-	0	-	0	-	0	-
	28	164	3	1.8	1	.6	10	6.1	14	8.5
	29	159	2	1.2	4	2.5	4	2.5	10	6.3
	30	207	5	2.4	2	1.0	2	1.0	9	4.3
	31	179	0	-	2	1.1	0	-	2	1.1
Finger Bank	8	195	2	1.0	0	-	1	.5	3	1.5
	9	252	2	.8	1	.4	6	2.4	9	3.6
Ollie Spot	33	182	2	1.1	3	1.6	0	-	5	2.7
	34	90	1	1.1	0	-	1	1.1	2	2.2
	35	50	1	2.0	1	2.0	2	4.0	4	8.0
	36	20	0	-	0	-	0	-	0	-
	37	123	1	.8	0	-	0	-	1	.8
	38	148	1	.7	0	-	1	.7	2	1.4
	40	165	1	.6	0	-	0	-	1	.6
	41	97	2	2.0	1	1.0	0	-	3	3.1
	42	36	0	-	0	-	0	-	0	-
	43	16	0	-	0	-	1	6.2	1	6.2
	45a	197	1	.5	1	.5	1	.5	3	1.5
	45b[d]	176	0	-	24	13.6	6	3.4	30	17.0
	46	210	2	.9	0	-	9	4.3	11	5.2
	47	203	3	1.5	0	-	3	1.5	6	2.9
	48	214	1	.5	0	-	0	-	1	.5
	49	168	3	1.8	4	2.4	11	6.5	18	10.7
	50	212	3	1.4	2	.9	6	2.8	11	5.2
	52	166	1	.6	0	-	0	-	1	.6
San Juan	53	68	1	1.5	0	-	0	-	1	1.5
	54	61	4	6.5	0	-	2	3.3	6	9.8
	55	215	5	2.3	0	-	1	.5	6	2.8

[a] Type I mortality: died at release approximately one after tagging.
[b] Total: Sum of "Dead", "Sinkers" and "Floaters".
[c] Released immediately.
[d] Fish from Haul 45b held in midwater net for approximately three hours before tagging.

Table 22 (cont'd)

			S. entomelas							
			Dead		Sinkers		Floaters		Total[b]	
Locality	Haul no.	No. tagged	No.	%	No.	%	No.	%	No.	%
Finger Bank	6	4	0	–	0	–	0	–	0	–
	11	241	1	.4	2	.8	11	4.6	14	5.8

Table 23. Type I mortality[a] by species and by locality, M/V BLUE WATERS, August 8-22, 1980.

Locality	Haul no.	No. tagged	Dead No.	Dead %	Sinkers No.	Sinkers %	Floaters No.	Floaters %	Total No.	Total %
			S. flavidus							
Triangle Is.	38	170	17	10	18	11	14	8	49	29
	39	189	9	5	20	10	25	13	54	28
Topknot	6	191	24	12	14	7	15	8	53	27
	8	30	2	7	4	13	0	-	6	20
	9	43	0	-	0	-	1	2	1	2
	10	5	0	-	0	-	0	-	0	-
	11	38	1	3	1	3	0	-	2	6
	12	19	1	5	0	-	0	-	1	5
Cape Scott Spit	44	93	1	1	3	3	11	12	15	16
	46	91	1	1	10	11	11	12	22	24
SE Corner, Goose Is. Gully	20	207	44	21	22	11	11	5	77	37
	20a [b]	133	103	77	7	5	9	7	119	89
	22	160	27	17	22	14	15	9	64	40
	23	105	5	5	12	11	27	26	44	42
	26	188	18	9	27	14	21	11	66	35
	33	111	7	6	10	9	10	9	27	24
	34	68	0	-	5	7	10	15	15	22
	35	68	2	3	1	1	0	-	3	4
	36	134	5	4	16	12	7	5	28	21
	37	148	7	5	26	17	18	12	51	34
	48	204	13	6	19	9	24	12	56	27
	50	42	0	-	1	2	0	-	1	2
	51	155	4	2	6	4	18	12	28	18
	54	12	1	8	0	-	0	-	1	8
	55	15	3	20	0	-	0	-	3	20
	58	167	7	4	3	2	19	11	29	17
			S. brevispinis							
SE Corner, Goose Is. Gully	34	14	10	71	0	-	0	-	10	71

[a]Type I mortality: died at release approximately one hour after tagging.
[b]Fish from haul 20a held in net for approximately three hours before tagging.

Table 24. Type II mortality[a] by species and by locality, M/V OCEAN KING, May 23-June 12, 1980.

			S. flavidus							
			Dead		Sinkers		Floaters		Total[b]	
Locality	Haul no.	No. tagged	No.	%	No.	%	No.	%	No.	%
Big Bank	19	183	20	10.9	26	14.2	1	.5	47	25.7
Finger Bank	7	9	0	-	0	-	0	-	0	-
	13	76	5	6.6	6	7.9	0	-	11	14.5
	14	73	1	1.4	6	8.2	0	-	7	9.6
	16	37	0	-	2	5.4	0	-	2	5.4
Ollie Spot	39	194	2	1.0	5	2.6	0	-	7	3.6
	44	185	3	1.6	1	.5	1	.5	5	2.7
	51	172	10	5.8	5	2.9	2	1.2	17	9.9
San Juan	54	184	7	3.8	4	2.2	1	.5	12	6.5
			S. entomelas							
Finger Bank	10[c]	167	16	9.6	5	3.0	10	6.0	31	18.6

[a] Type II mortality: Died overnight before release following day.
[b] Total: Sum of "Dead", "Sinkers" and "Floaters".
[c] Deflated and non deflated fish combined.

Table 25. Type II mortality[a] by species and by locality, M/V BLUE WATERS, August 8-22, 1980.

Locality	Haul no.	No. tagged	Dead No.	Dead %	Sinkers No.	Sinkers %	Floaters No.	Floaters %	Total No.	Total %
					S. flavidus					
Topknot	12	19	1	5	0	-	0	-	1	5
SE Corner, Goose Is. Gully	17	1	0	-	0	-	0	-	0	-
					S. pinniger					
Topknot	12	19	12	63	0	-	0	-	12	63
					S. entomelas					
Topknot	12	46	28	61	1	2	0	-	29	63
SE Corner, Goose Is. Gully	17	28	27	96	0	-	0	-	27	96

[a]Type II mortality: died overnight before release following day.

[b]Total: Sum of "Dead", "Sinkers" and "Floaters".

Table 26. Size composition of double tagged[a] *S. flavidus*, M/V OCEAN KING, May 23-June 12, 1980.

Fork Length(cm)	Ollie Spot			San Juan		
	No. tagged	Died[b]	%	No. tagged	Died	%
35	-	-	-	-	-	-
36	-	-	-	-	-	-
37	1	-	-	-	-	-
38	0	-	-	2	-	-
39	1	-	-	2	-	-
40	3	-	-	3	-	-
41	1	-	-	2	-	-
42	4	-	-	5	-	-
43	8	-	-	0	-	-
44	8	-	-	1	-	-
45	13	-	-	0	-	-
46	5	1	20.0	1	-	-
47	14	-	-	5	1	20.0
48	12	-	-	2	-	-
49	14	-	-	5	-	-
50	7	-	-	1	-	-
51	3	-	-	0	-	-
52	2	-	-	1	-	-
53	1	-	-	-	-	-
54	0	-	-	-	-	-
55	2	-	-	-	-	-
Total	99	1	1.0	30	1	3.3

[a] In addition to the Floy Fd-68B anchor tag, a suture tag was used.
[b] Includes fish that died upon release one hour after tagging and fish kept overnight.

Table 27. Size composition and mortality frequency of saline[a] injected *S. flavidus*, M/V OCEAN KING, May 23 - June 12, 1980.

Fork Length(cm)	Ollie Spot			San Juan	
	No. tagged	Died[b]	%	No. tagged	Died
32	-	-	-	2	-
33	-	-	-	3	-
34	-	-	-	1	-
35	-	-	-	3	-
36	-	-	-	1	-
37	2	-	-	1	-
38	2	-	-	6	-
39	0	-	-	4	-
40	2	-	-	6	-
41	6	-	-	4	-
42	11	1	9.0	0	-
43	11	0	0.0	0	-
44	7	0	0.0	1	-
45	18	0	0.0	1	-
46	13	0	0.0	1	-
47	17	0	0.0	1	-
48	16	0	0.0	1	-
49	15	1	6.7	3	-
50	4	0	0.0	2	-
51	1	0	0.0	1	-
52	2	0	0.0	-	-
53	5	1	20.0	-	-
Total	132	3	2.3	42	0

[a] Control experiment; fish injected with Ringers saline.

[b] Includes fish that died upon release one hour after tagging and fish kept overnight.

Table 28. Codes for injuries and condition of rockfish at time of release.

Injury code	Explanations
A	- bleeding at tag hole
B	- general bleeding
C	- cut, lesion or open wound
D	- dropped on deck
E	- eyes cloudy or damaged
F	- general fin damage
G	- gas
H	- bleeding at gas hole
J	- jaw bleeding or damaged
K	- dorsal fin damage
L	- scale loss
N	- scrapes or bruises
O	- bleeding at OTC hole
P	- pectoral fin damage
Q	- anal fin damage
R	- raw wound at tag
S	- scar or healing wound
T	- caudal fin damage
U	- pelvic fin damage
Condition code	
1	- weak
2	- good
3	- sinker
4	- floater
9	- fate unknown

Table 29. Summary of rockfish injuries at time of release by locality, M/V OCEAN KING, May 23-June 12, 1980. (See Table 28 for explanation of injury codes.)

Injury code	Big Bank	Finger Bank	San Juan	Ollie Spot
A	60	35	27	138
B	-	2	2	16
C	25	22	16	60
D	13	3	2	29
E	47	10	14	69
F	-	-	-	1
G	9	11	2	5
H	47	43	6	61
J	8	3	-	14
K	160	53	6	146
L	225	116	109	406
N	45	28	3	49
O	13	10	7	24
P	1	4	4	4
Q	6	4	2	3
R	59	106	11	91
S	30	14	-	37
T	5	3	8	13
U	1	-	-	3
Multiple injuries	144	121	25	157
No injuries	1,118	438	242	1,660
Total	2,016	1,027	511	2,986

Table 30. Summary of tagged rockfish injuries at time of release, M/V BLUE WATERS, August 8-22, 1980. (For explanation of injury codes, see Table 28.)

Injury code	SE Goose Is.	Triangle Is.	Cape Scott Spit	Topknot
A	1	-	11	9
B	-	-	-	-
C	6	1	2	2
D	5	2	-	1
E	29	1	5	10
F	-	-	-	-
G	-	-	-	-
H	3	1	2	-
J	2	-	-	2
K	38	13	9	13
L	385	127	38	63
N	35	1	7	16
O	3	-	2	3
P	2	-	1	-
Q	-	-	-	-
R	-	-	1	-
S	7	1	1	3
T	-	1	-	-
U	-	1	-	-
Multiple injuries	72	38	14	17
No injuries	1,089	146	89	189
Total	1,677	333	182	328

Table 31. Summary of rockfish condition at time of release, M/V OCEAN KING, May 23-June 12, 1980. (For explanation of condition codes, see Table 28.)

		Condition				
		1	2	3	4	9
Big Bank	*S. flavidus*	164	1765	56	63	3
Finger Bank	*S. entomelas*	31	364	7	20	-
	S. flavidus	42	626	15	7	-
Ollie Spot	*S. flavidus*	138	2771	48	44	7
San Juan	*S. flavidus*	17	487	4	4	-
Total		392	6013	130	138	10

Table 32. Summary of tagged rockfish condition at time of release, M/V BLUE WATERS, August 8-22, 1980. (For explanation of condition codes, see Table 28.)

	Condition				
	1	2	3	4	9
SE Goose Is. Gully					
S. brevispinis	1	3	-	-	-
S. entomelas	-	1	-	-	-
S. flavidus	155	1,149	177	189	2
Cape Scott Spit					
S. flavidus	15	130	13	23	1
Triangle Is.					
S. flavidus	33	221	38	40	1
Topknot					
S. entomelas	2	14	1	-	1
S. flavidus	29	234	19	16	-
S. pinniger	2	10	-	-	-
Total	237	1,762	248	268	5

Table 33. Summary of rockfish condition upon release by mortality type and by species for M/V OCEAN KING and M/V BLUE WATERS tagging cruises.

		Type I mortality			Type II mortality		
Cruise	Species	No. tagged	Sinker (%)	Floater (%)	No. tagged	Sinker (%)	Floater (%)
OK 80-1	*S. entomelas*	245	.8	4.5	167	1.8	1.7
	S. flavidus	5,146	1.3	2.3	1,113	5.0	0.4
BW 80-1	*S. brevispinis*	14	0	0	0	0	0
	S. entomelas	0	0	0	74	1.3	0
	S. flavidus	2,766	8.9	9.6	20	0	0
	S. pinniger	0	0	0	19	0	0

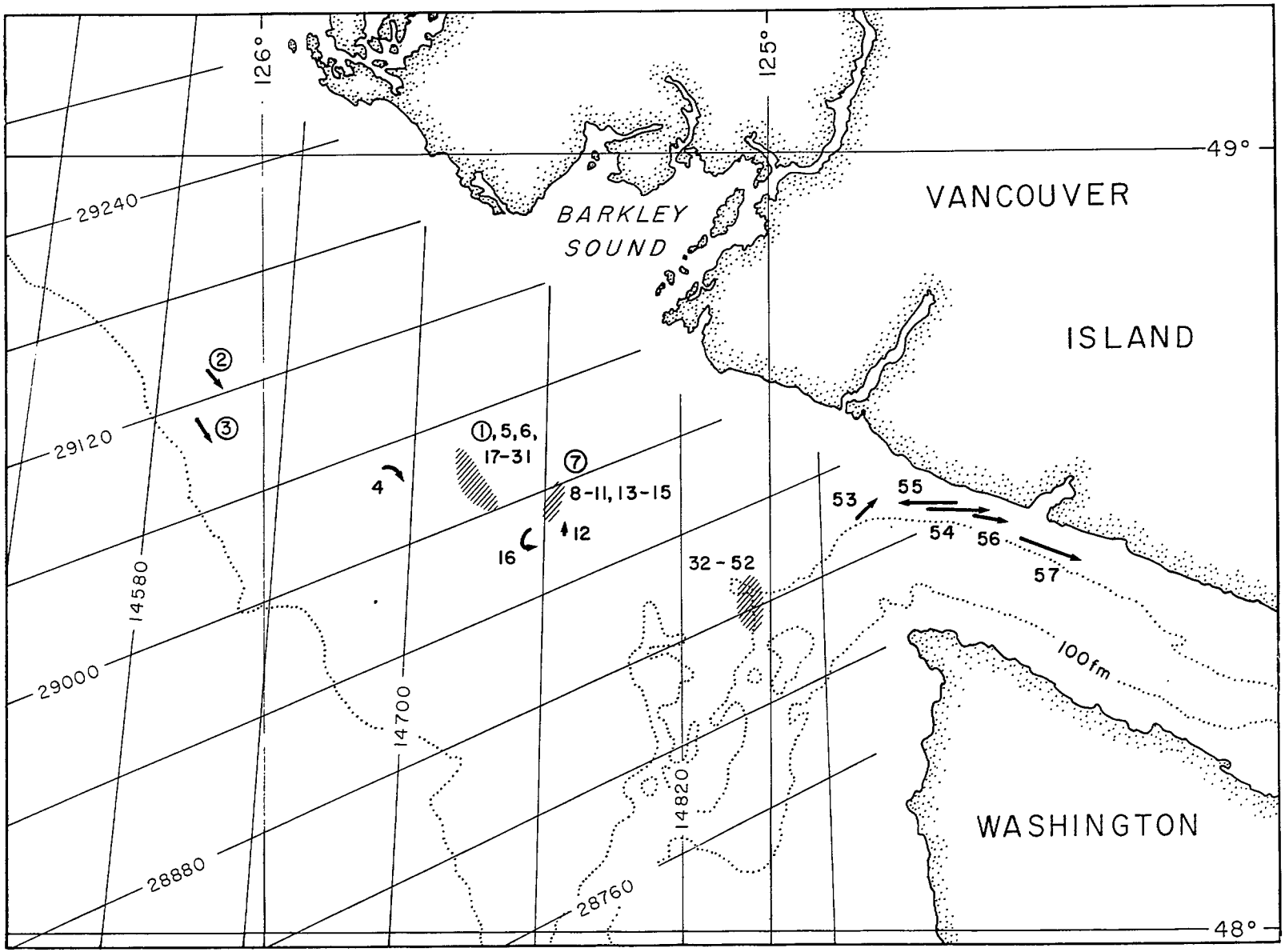

Fig. 1. Locations of midwater and on-bottom trawl hauls off southwest Vancouver Is., M/V OCEAN KING rockfish tagging cruise, May 23-June 12, 1980. (On-bottom haul numbers encircled)

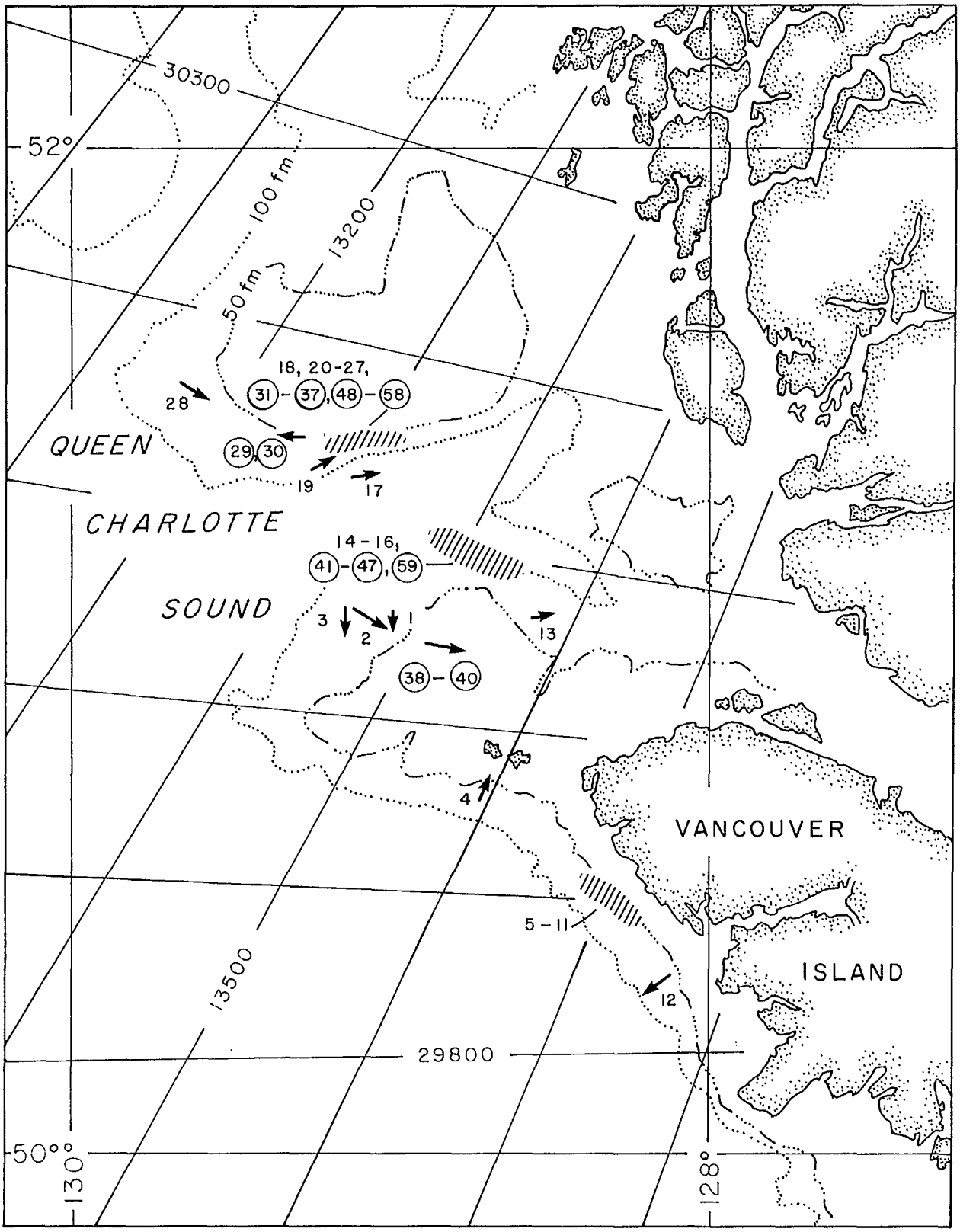

Fig. 2. Locations of midwater and on-bottom trawl hauls in Queen Charlotte Sound and northwest Vancouver Is., M/V BLUE WATERS rockfish tagging cruise, Aug. 8-22, 1980. (On-bottom haul numbers encircled)

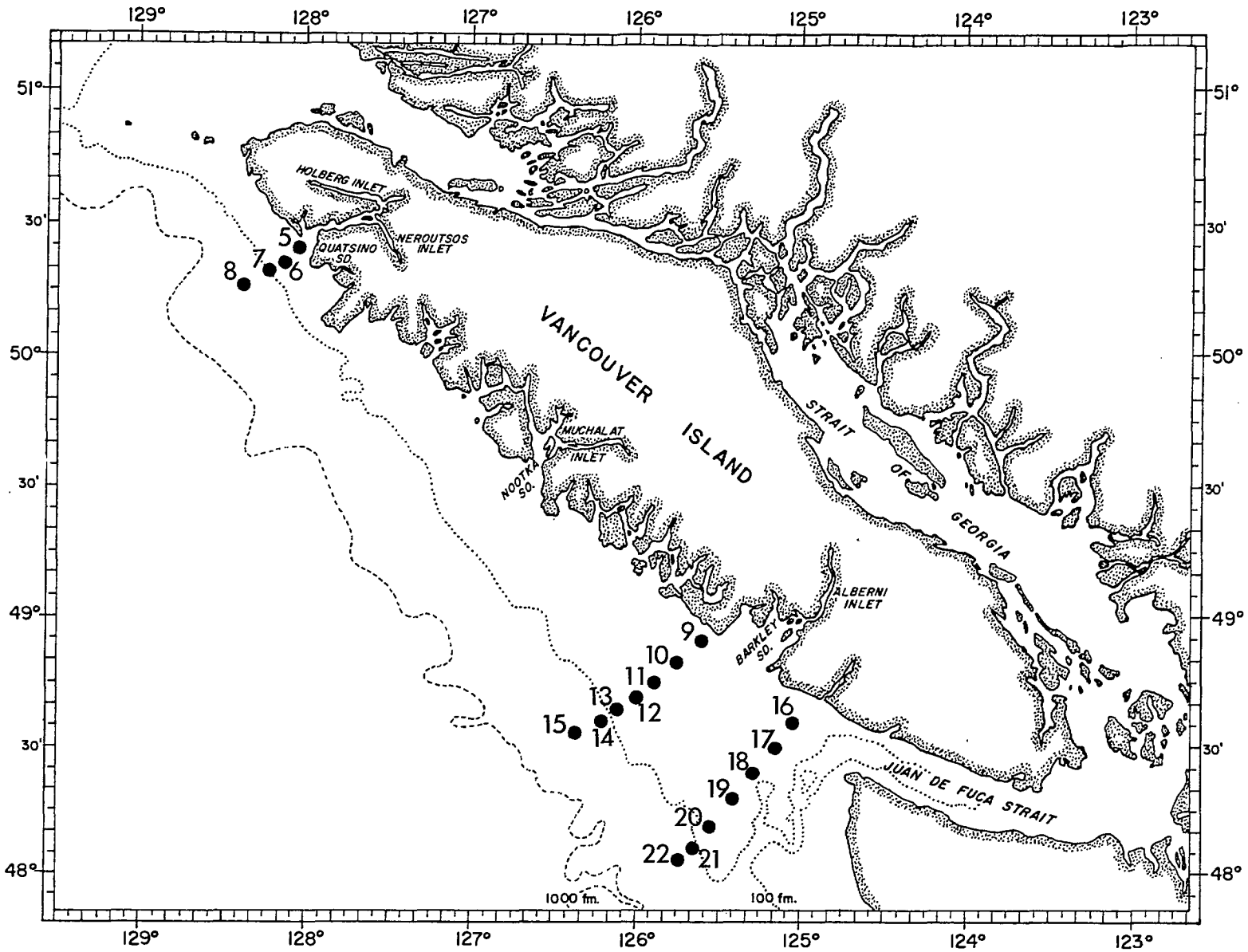

Fig. 3. Location of standard hydrographic stations off Vancouver Island during OK 80-1 and BW 80-1 (Stns. 5-8) rockfish tagging cruise.

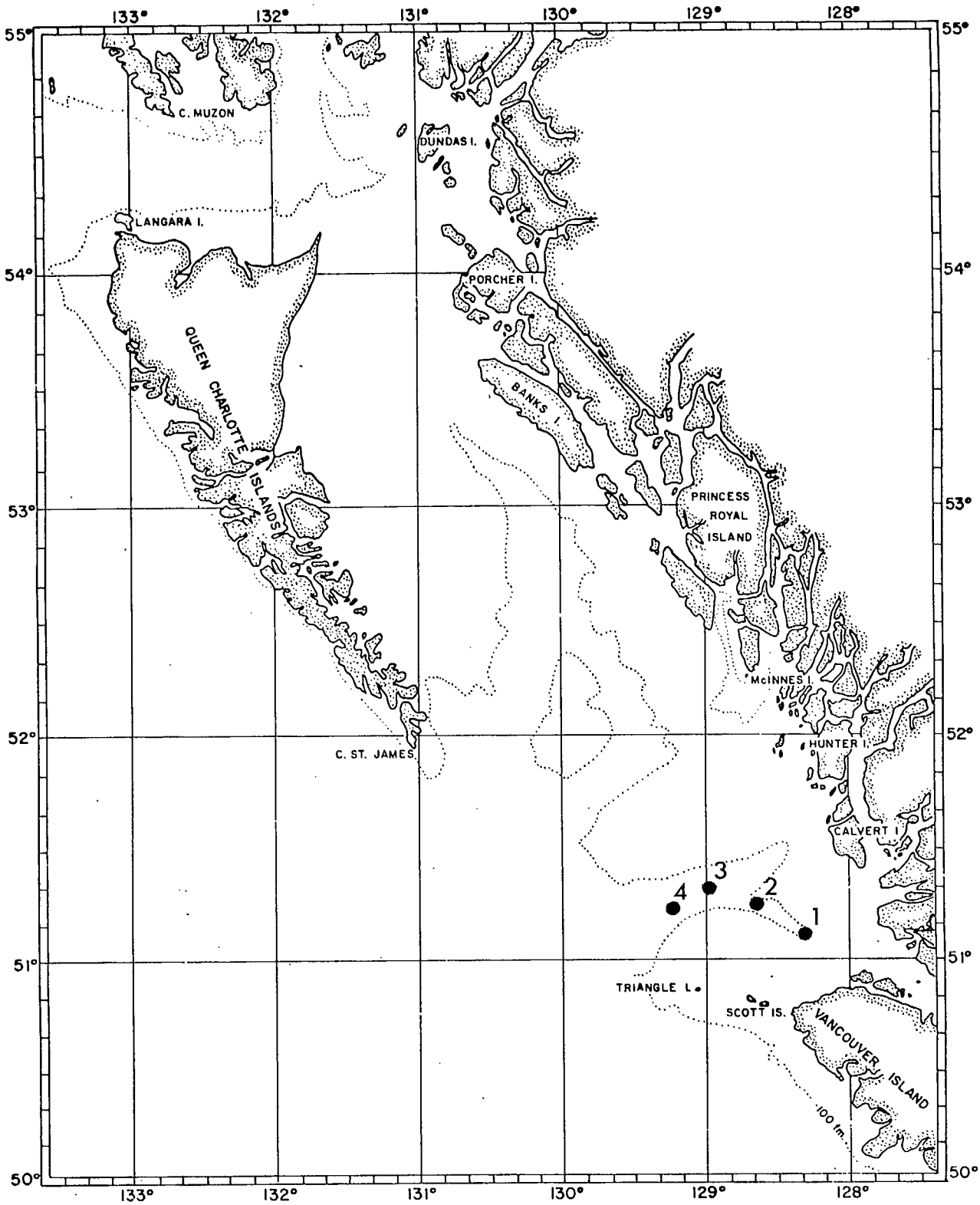

Fig. 4. Location of hydrographic stations in Queen Charlotte Sound during BW 80-1 rockfish tagging cruise. Aug. 8-22, 1980.

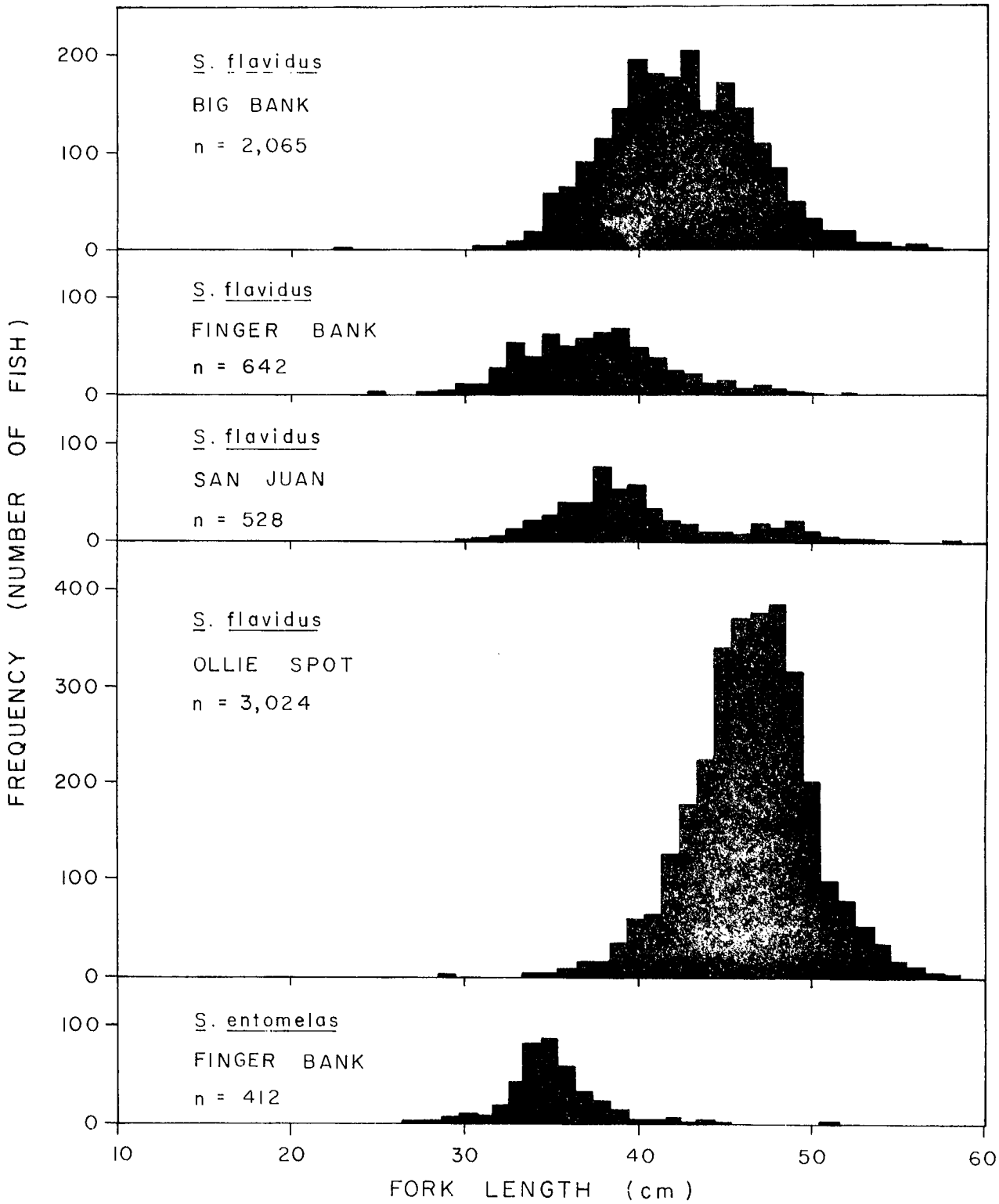

Fig. 5. Size composition of tagged rockfish, by species, by locality, M.V. OCEAN KING, May 23-June 12, 1980.

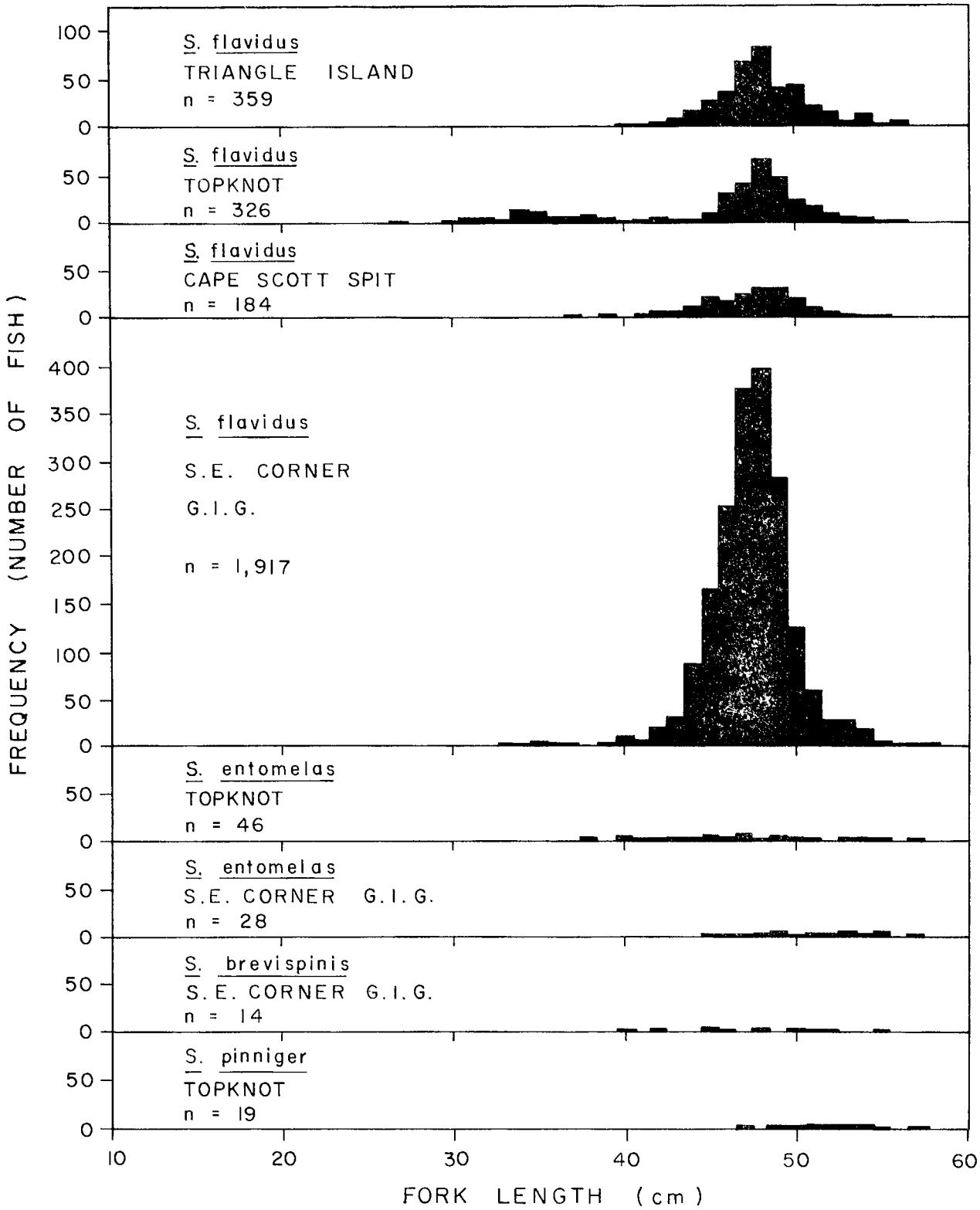

Fig. 6. Size composition of tagged rockfish, by species, by locality, M.V. BLUE WATERS. Aug. 8-22, 1980.

Appendix Table 1. NET DIMENSIONS AND CHARACTERISTICS FOR BOTTOM TRAWL

VESSEL M/V OCEAN KING NET Egeland flat trawl

OBSERVATION PERIOD May 23-June 12, 1980

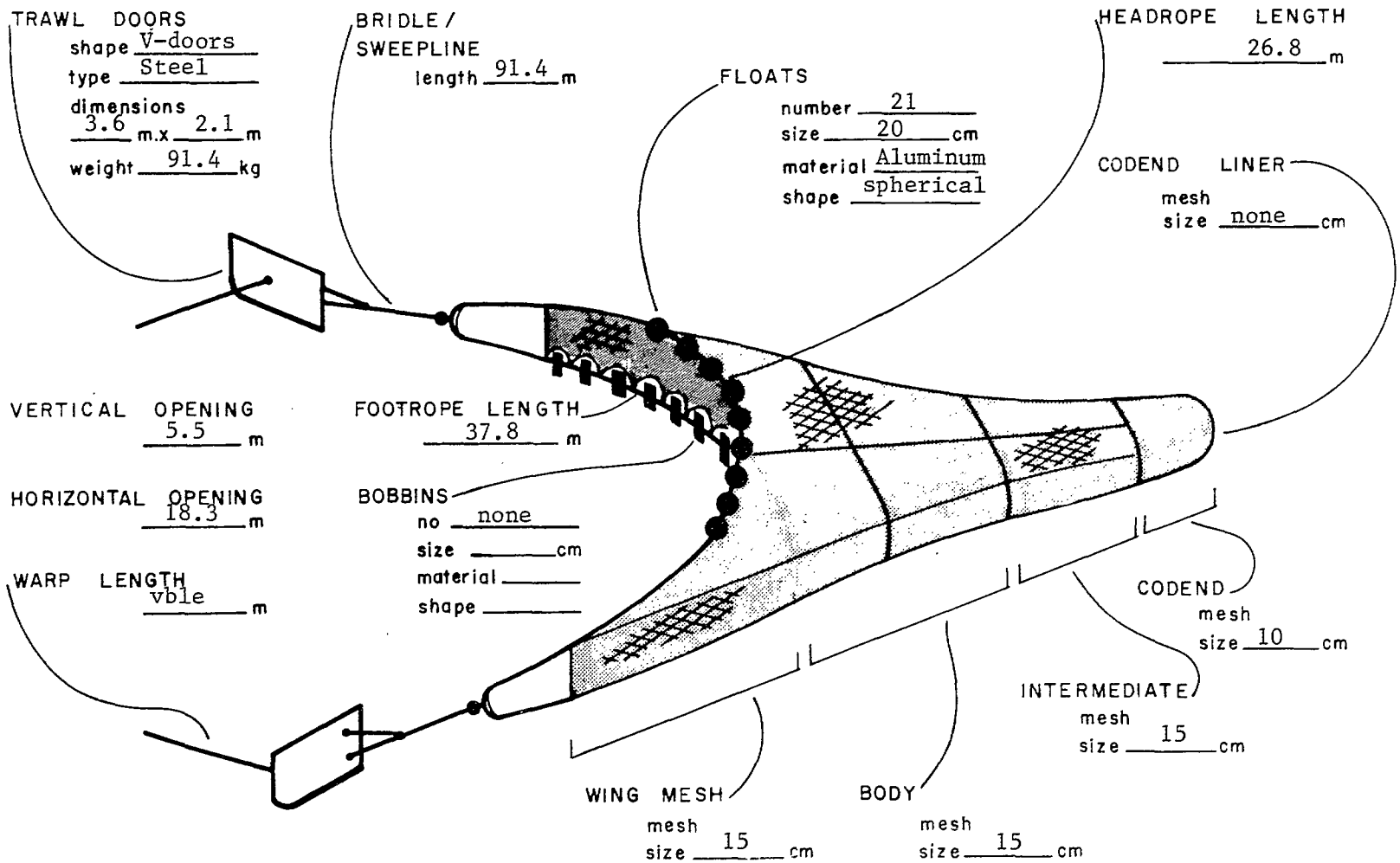

Appendix Table 2. Not dimensions and characteristics for the Egeland midwater trawl.

VESSEL NAME OCEAN KING VESSEL TYPE Stern trawler OBSERVATION PERIOD May 23 - June 12, 1980

TRAWL DOORS
Shape V-door
Type Steel
Dimensions
3.6 m.x 2.1 m.
Weight 725 kg.

SWEEPLINE/
DANDYLINE
Length 119 m.

FLOATS
Number none
Size ____ cm.
Shape ____
Material ____

FISH FINDER
Name Furuno
Model No. FNV 450
Frequency 200 kc.
Paper Type (wet or dry)
Speed of Advance
1.5 cm./min.

NET RECORDER
Name Furuno
Model No. FNR 400
Frequency 75/50 kc.

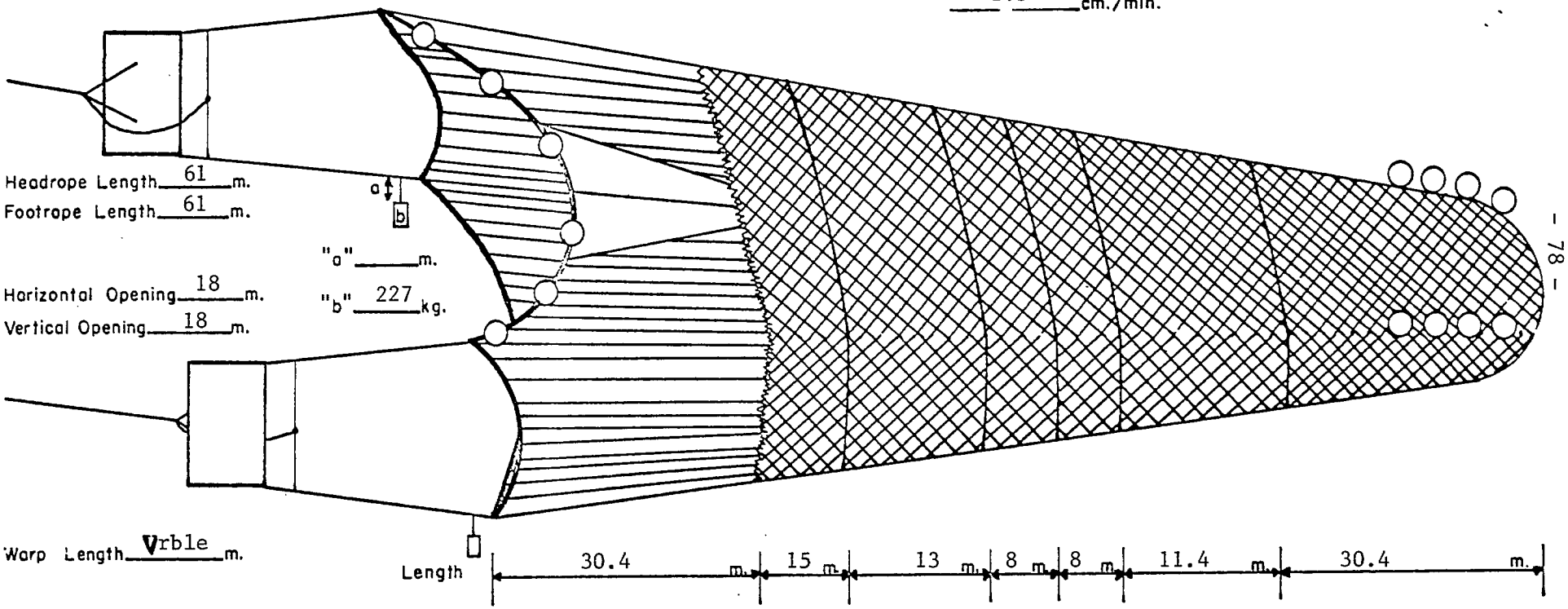

WINGS
(mesh or line)
Mesh Size 19 cm.
Line Spacing ____ cm.
Line Thickness ____ cm.
Material nylon
Height of Wings ____ m.

Mesh Material
nylon

CODEND
(floats or weights)
Number none
Size ____ cm.
Weight ____ kg.
Material ____
Shape ____

Appendix Table 3. Net dimensions and characteristics for the Diamond VII midwater trawl.

VESSEL NAME BLUE WATERS VESSEL TYPE Stern trawler OBSERVATION PERIOD Aug. 8-22, 1980

TRAWL DOORS
Shape rectangular/steel
Type suberkrüb
Dimensions 2.4 m. x 1.2 m. ($3.5m^2$)
Weight 408 kg.

SWEEPLINE/DANDYLINE
Length 82.3 m.

FLOATS
Number 16
Size 30.5 cm.
Shape Spherical
Material plastic

FISH FINDER
Name Simrad
Model No. ____
Frequency ____ kc.
Paper Type (wet or dry)
Speed of Advance
____ ____ cm./min.

NET RECORDER
Name Elac
Model No. L92 72
Frequency ____ kc.

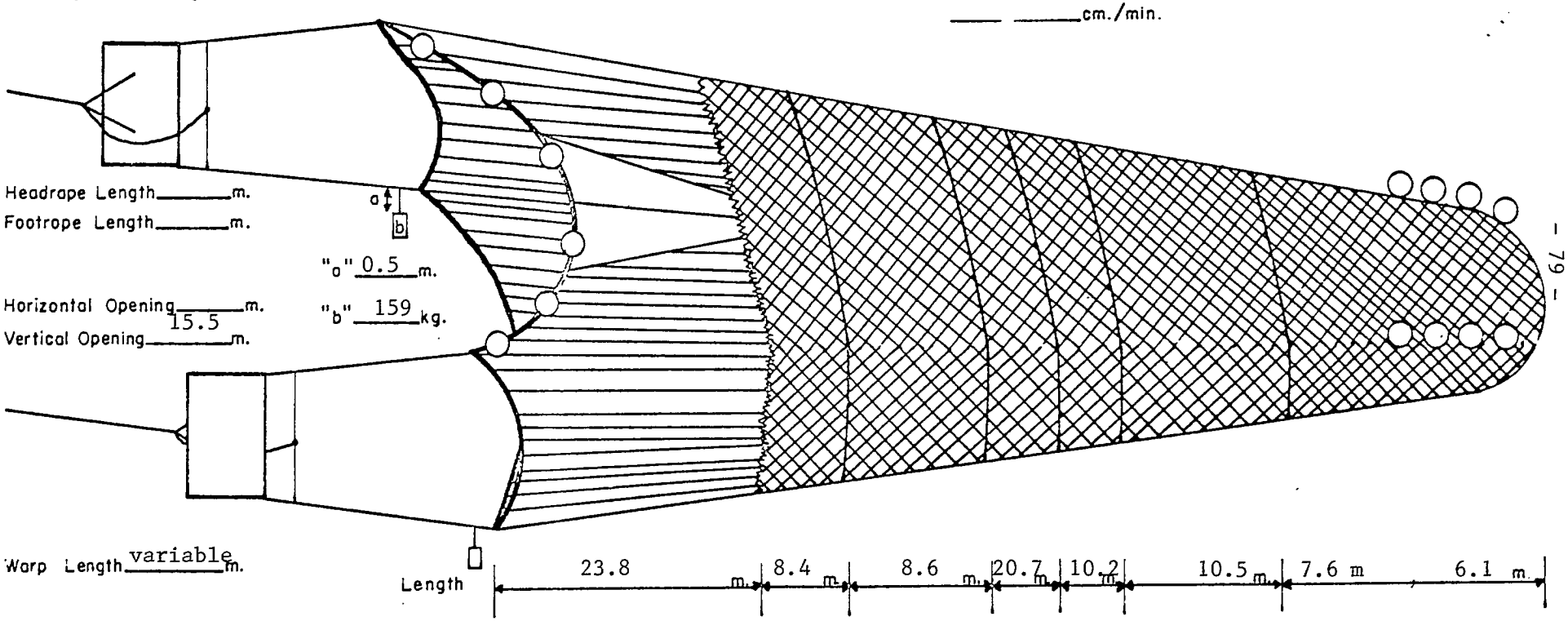

Headrope Length ____ m.
Footrope Length ____ m.
"a" 0.5 m.
"b" 159 kg.
Horizontal Opening ____ m.
Vertical Opening 15.5 m.
Warp Length variable m.
Length

MESH SIZE 81.3 cm. 81.3 cm. 55.9 cm. 40.6 cm. ____ cm. ____ cm. 7.6 cm 8.9 cm.

WINGS
(mesh or line)
Mesh Size 81.3 cm.
Line Spacing ____ cm.
Line Thickness ____ cm.
Material poly
Height of Wings ____ m.

Mesh Material
poly

CODEND
(floats ~~or weights~~)
Number 2
Size 30.5 cm.
Weight ____ kg.
Material plastic
Shape round

Appendix Table 4. NET DIMENSIONS AND CHARACTERISTICS FOR BOTTOM TRAWL

VESSEL M/V BLUE WATERS NET Atlantic Western III

OBSERVATION PERIOD August 8 - 22, 1980

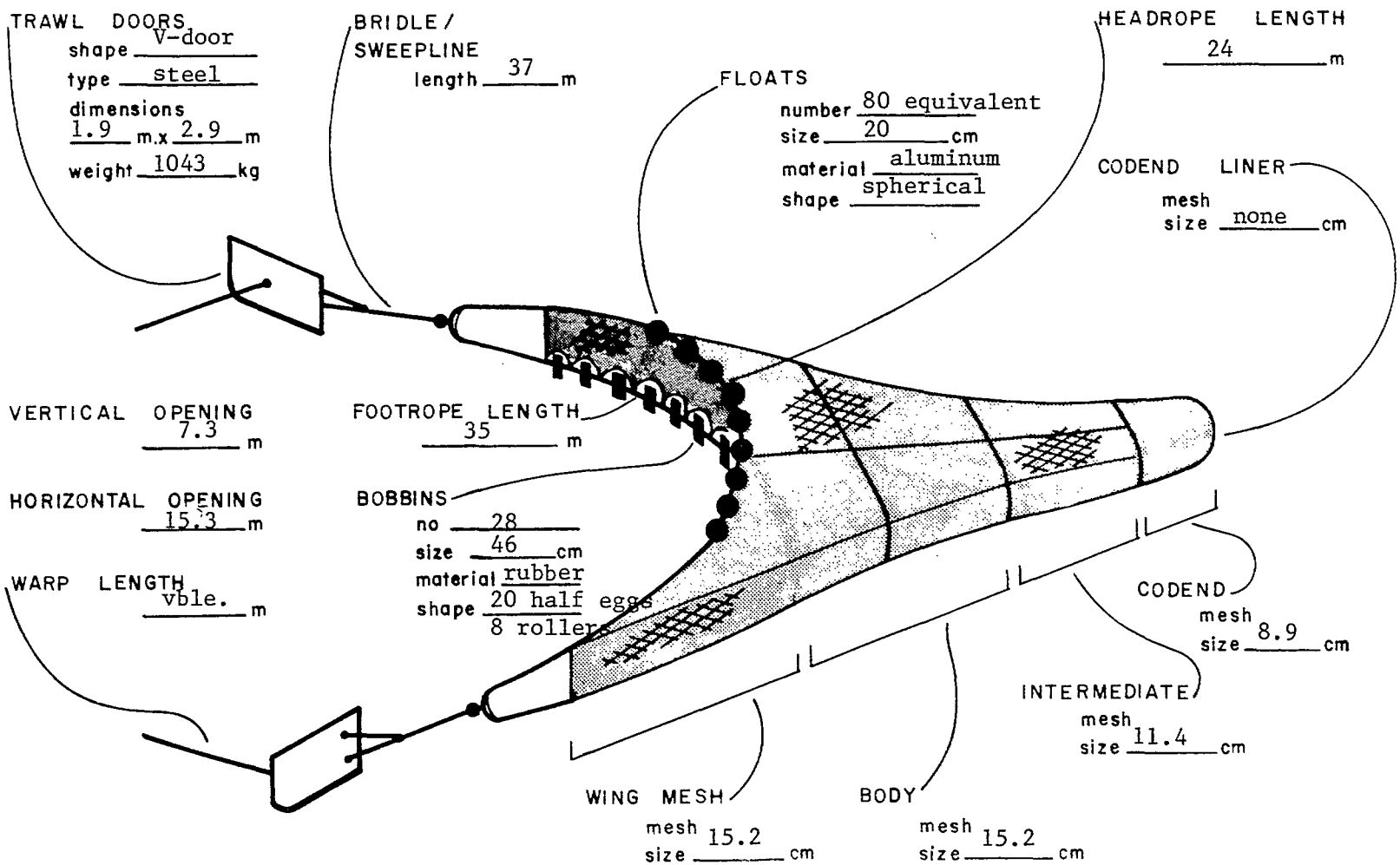

Appendix Table 5. Vessel specifications.

Vessel Name:	OCEAN KING	BLUE WATERS
Skipper:	Jack Egeland	Donald Vaccher
Landing Port:	Vancouver	Prince Rupert
Gross Tons:	115	180
Overall Length:	24 m (80 ft)	28m (91 ft)
Hp:	725	640
Crew (total):	3 - 5	4
Fish Storage:	Ice	Refrigerated Seawater
Electronic Aids:		
Sounder:	(2) Furuno's	(1) Elac, (1) Simrad
Sonar:	Furuno	
Radar:	(1) Decca 202, (1) Decca 916	Furuno
Radio:	(1) CB radio, (2) VHF, (1) SSB	(1) VHF Raytheon
Autopilot:	Wagner MK4	Decca
Loran:	Northstar 6000	(1) Internav, (1) Bendix, (1) Epsco C-Plot-2
Sounder (net):	Furuno	Elac
Trawl Gear:		
	Double Gear	Double Gear
Winches:	Two Singles	Double
Cable:		
Amount per single spool:		
Length:	1,829 m (1000 fm)	915 m (500 fm)
Diameter:	1.9 cm (0.75 in)	1.9 cm (0.75 in)
Net Reel:		
	(2) Standard Hydraulic Trawl	Hydraulic Seine

Appendix Table 6. Fishing log for M/V OCEAN KING rockfish tagging cruise, May 23-June 12, 1980.

Haul no.		1	2	3	4	5
Date		May 24	May 25	May 25	May 25	May 26
Area		BB	BB	BB	BB	BB
Start Time	(PST)	1125	0930	1043	1417	1637
Duration	(Min)	8	30	33	28	11
Start N. Lat.	(Deg)	048	048	048	048	048
	(Min)	35.9	43.7	40.4	35.8	34.9
W. Long.	(Deg)	125	126	126	125	125
	(Min)	37.7	06.5	08.0	46.0	35.6
Direction (Deg.True)		161	159	162	127	128
Finish N. Lat.	(Deg)	048	048	048	048	048
	(Min)	35.6	42.1	38.8	35.3	34.5
W.Long.	(Deg)	125	126	126	125	125
	(Min)	37.4	05.5	07.1	43.8	34.6
Haul Distance (N.M.)		.36	1.73	1.71	1.54	.77
Depth	(Bottom) (Meters)	118-118	122-124	142-146	69- 69	106-122
Depth	(Net)	118-118	122-124	142-146	31- 31	64- 73
Water Temp.	(Deg.C)					
Surface		--	12.5	12.0	12.0	12.0
Bottom		--	--	--	--	--
Depth	(Meters)					
Type of Gear		3	3	3	20	20
Total Catch	(Kg)	22	29	42	0	41
Remarks		Usable	Usable	Usable	Usable	Usable

Appendix Table 6 (cont'd)

Haul No.	1	2	3	4	5
Date	May 24	May 25	May 25	May 25	May 26
Area	BB	BB	BB	BB	BB
Total Catch (kg)	22	29	42	0	41
Arrowtooth flounder	—	Tr	2	—	—
Dover sole	—	—	Tr	—	—
English sole	3	Tr	—	—	—
Flathead sole	—	Tr	—	—	—
Pacific halibut	—	—	—	—	—
Pacific sanddab	1	—	—	—	—
Petrale sole	1	1	Tr	—	—
Rex sole	Tr	Tr	Tr	—	—
Slender sole	—	Tr	—	—	—
Subtotal	5	1	2	—	—
S. brevispinis	—	—	—	—	—
S. elongatus	—	—	—	—	—
S. entomelas	—	—	—	—	Tr
S. flavidus	—	—	—	—	—
S. paucispinis	—	—	—	—	—
S. proriger	—	—	—	—	—
Subtotal	—	—	—	—	Tr
Chinook salmon	—	—	—	—	16
Eulachon	1	—	1	—	—
Lingcod	—	3	15	—	—
Pacific cod	10	20	14	—	—
Pacific hake	—	—	—	—	—
Pacific herring	—	—	—	—	25
Sablefish	—	Tr	—	—	—
Walleye pollock	—	—	—	Tr	—
Subtotal	11	23	30	Tr	41
Longnose skate	2	3	—	—	—
Ratfish	4	Tr	Tr	—	Tr
Spiny dogfish	—	2	10	—	—
Subtotal	6	5	10	—	Tr

Appendix Table 6 (cont'd)

Haul No.		6	7	8	9	10
Date		May 26	May 26	May 27	May 27	May 27
Area		BB	FB	FB	FB	FB
Start Time	(PST)	1712	2021	0805	1345	1935
Duration	(Min)	26	20	43	20	40
Start N. Lat.	(Deg)	048	048	048	048	048
	(Min)	34.6	33.3	32.5	33.3	33.7
W. Long.	(Deg)	125	125	125	125	125
	(Min)	35.0	24.7	26.5	24.7	24.9
Direction (Deg.True)		308	008	018	298	234
Finish N. Lat.	(Deg)	048	048	048	048	048
	(Min)	35.4	34.4	34.4	33.5	33.2
W.Long.	(Deg)	125	125	125	125	125
	(Min)	36.3	24.3	25.3	25.9	27.5
Haul Distance (N.M.)		1.18	1.13	2.06	.82	1.79
Depth	(Bottom) (Meters)	109- 82	91- 91	129-109	91-109	100-117
Depth	(Net)	55-62	91-91	71-73	73-82	84-84
Water Temp.	(Deg.C)					
Surface		12.0	12.0	12.0	12.0	12.0
Bottom		--	--	--	--	--
Depth	(Meters)					
Type of Gear		20	3	20	20	20
Total Catch	(Kg)	110	1597	645	700	650
Remarks		Usable	Usable	Usable	Usable	Usable

Appendix Table 6 (cont'd)

Haul No.	6	7	8	9	10
Date	May 26	May 26	May 27	May 27	May 27
Area	BB	FB	FB	FB	FB
Total Catch (kg)	110	1597	645	700	650
Arrowtooth flounder	—	Tr	—	—	—
Dover sole	—	—	—	—	—
English sole	10	Tr	—	—	—
Flathead sole	—	—	—	—	—
Pacific halibut	—	47	—	—	—
Pacific sanddab	—	—	—	—	—
Petrale sole	—	10	—	—	—
Rex sole	—	—	—	—	—
Slender sole	—	—	—	—	—
Subtotal	10	57	—	—	—
S. brevispinis	—	—	—	—	—
S. elongatus	—	—	—	—	—
S. entomelas	40	—	—	—	600
S. flavidus	50	10	150	600	Tr
S. paucispinis	—	—	Tr	—	—
S. proriger	—	1500	30	—	—
Subtotal	90	1510	180	600	600
Chinook salmon	—	—	15	—	—
Eulachon	—	—	—	—	—
Lingcod	—	—	—	—	—
Pacific cod	—	Tr	—	—	—
Pacific hake	—	—	—	—	—
Pacific herring	10	—	400	100	50
Sablefish	—	Tr	—	—	—
Walleye pollock	—	—	—	—	—
Subtotal	10	Tr	415	100	50
Longnose skate	—	—	—	—	—
Ratfish	—	—	—	—	—
Spiny dogfish	—	30	50	—	—
Subtotal	—	30	50	—	—

Appendix Table 6 (cont'd)

Haul No.		11	12	13	14	15
Date		May 28	May 28	May 28	May 28	May 28
Area		FB	FB	FB	FB	FB
Start Time	(PST)	0843	1426	1519	1703	1748
Duration	(Min)	50	20	36	9	27
Start N. Lat.	(Deg)	048	048	048	048	048
	(Min)	34.3	30.7	32.3	33.5	31.5
W. Long.	(Deg)	125	125	125	125	125
	(Min)	25.2	24.9	25.8	28.3	28.1
Direction (Deg.True)		184	054	014	227	040
Finish N. Lat.	(Deg)	048	048	048	048	048
	(Min)	43.3	41.2	33.7	33.2	32.4
W.Long.	(Deg)	125	125	125	125	125
	(Min)	25.7	24.8	24.1	28.8	26.8
Haul Distance (N.M.)		2.03	.50	1.80	.45	1.24
Depth	(Bottom) (Meters)	109-120	100-100	109- 89	95-124	120-133
Depth	(Net)	73-62	82-91	66-66	62-71	66-73
Water Temp.	(Deg.C)					
Surface		12.0	13.0	13.1	13.8	13.0
Bottom		--	8.0	--	--	--
Depth	(Meters)		100			
Type of Gear		20	20	20	20	20
Total Catch	(Kg)	918	25	480	50	1545
Remarks		Usable	Usable	Usable	Usable	Usable

Appendix Table 6 (cont'd)

Haul No.	11	12	13	14	15
Date	May 28	May 28	May 28	May 28	May 28
Area	FB	FB	FB	FB	FB
Total Catch (kg)	918	25	480	50	1545
Arrowtooth flounder	—	—	—	—	—
Dover sole	—	—	—	—	—
English sole	—	—	—	—	—
Flathead sole	—	—	—	—	—
Pacific halibut	—	—	—	—	—
Pacific sanddab	—	—	—	—	—
Petrale sole	—	—	—	—	—
Rex sole	—	—	—	—	—
Slender sole	—	—	—	—	—
Subtotal	—	—	—	—	—
S. brevispinis	—	—	—	—	—
S. elongatus	—	—	—	—	—
S. entomelas	600	—	400	10	—
S. flavidus	50	—	50	—	40
S. paucispinis	—	—	—	—	—
S. proriger	50	—	—	—	—
Subtotal	700	—	450	10	40
Chinook salmon	8	—	8	—	—
Eulachon	—	—	—	—	—
Lingcod	—	—	—	—	—
Pacific cod	—	—	—	—	—
Pacific hake	—	—	—	—	—
Pacific herring	10	25	2	40	1500
Sablefish	—	—	—	—	—
Walleye pollock	—	—	—	—	—
Subtotal	18	25	10	40	1500
Longnose skate	—	—	—	—	—
Ratfish	—	—	—	—	—
Spiny dogfish	200	—	20	—	5
Subtotal	200	—	20	—	5

Appendix Table 6 (cont'd)

Haul No.		16	17	18	19	20
Date		May 28	May 29	May 29	May 29	May 30
Area		FB	BB	BB	BB	BB
Start Time	(PST)	1928	0937	1155	1744	0905
Duration	(Min)	63	43	38	71	75
Start N. Lat.	(Deg)	048	048	048	048	048
	(Min)	31.3	36.7	35.2	34.4	35.4
W. Long.	(Deg)	125	125	125	125	125
	(Min)	28.2	34.4	32.8	32.2	36.0
Direction (Deg.True)		270	141	313	176	093
Finish N. Lat.	(Deg)	048	048	048	048	048
	(Min)	29.8	35.0	34.6	35.7	35.4
W.Long.	(Deg)	125	125	125	125	125
	(Min)	28.2	35.3	35.1	35.9	32.0
Haul Distance (N.M.)		1.50	1.80	1.64	2.78	2.65
Depth	(Bottom) (Meters)	95- 95	137- 96	106-111	109-118	126-109
Depth	(Net)	66-66	91-77	73-77	73-82	95-77
Water Temp.	(Deg.C)					
Surface		13.0	12.0	12.5	13.5	12.0
Bottom		—	—	—	—	—
Depth	(Meters)					
Type of Gear		20	20	20	20	20
Total Catch	(Kg)	80	555	2130	395	429
Remarks		Usable	Usable	Usable	Usable	Usable

Appendix Table 6 (cont'd)

Haul No.	16	17	18	19	20
Date	May 28	May 29	May 29	May 29	May 30
Area	BB	BB	BB	BB	BB
Total Catch (kg)	80	555	2130	395	429
Arrowtooth flounder	—	—	—	—	—
Dover sole	—	—	—	—	—
English sole	—	—	—	—	—
Flathead sole	—	—	—	—	—
Pacific halibut	—	—	—	—	—
Pacific sanddab	—	—	—	—	—
Petrale sole	—	—	—	—	—
Rex sole	—	—	—	—	—
Slender sole	—	—	—	—	—
Subtotal	—	—	—	—	—
S. brevispinis	—	—	—	—	—
S. elongatus	—	—	—	—	—
S. entomelas	—	Tr	10	—	—
S. flavidus	40	200	300	350	300
S. paucispinis	—	—	—	—	—
S. proriger	—	Tr	—	—	—
Subtotal	40	200	310	350	300
Chinook salmon	—	5	5	20	4
Eulachon	—	—	—	—	—
Lingcod	—	—	—	—	—
Pacific cod	—	—	—	—	—
Pacific hake	10	—	—	—	—
Pacific herring	5	250	1800	Tr	Tr
Sablefish	—	—	—	—	—
Walleye pollock	—	—	—	—	—
Subtotal	15	255	1805	20	4
Longnose skate	—	—	—	—	—
Ratfish	—	—	—	—	—
Spiny dogfish	25	100	15	25	125
Subtotal	25	100	15	25	125

Appendix Table 6 (cont'd)

Haul No.		21	22	23	24	25
Date		May 30	May 30	May 30	May 31	May 31
Area		BB	BB	BB	BB	BB
Start Time	(PST)	1412	1535	1712	0733	1143
Duration	(Min)	57	50	23	46	39
Start N. Lat.	(Deg)	048	048	048	048	048
	(Min)	34.7	34.5	35.5	35.3	34.7
W. Long.	(Deg)	125	125	125	125	125
	(Min)	29.1	32.8	35.8	35.9	33.0
Direction (Deg.True)		260	298	130	105	252
Finish N. Lat.	(Deg)	048	048	048	048	048
	(Min)	34.3	36.2	34.5	34.3	35.7
W.Long.	(Deg)	125	125	125	125	125
	(Min)	32.5	36.3	34.1	33.9	35.9
Haul Distance (N.M.)		2.29	2.88	1.51	1.66	2.17
Depth	(Bottom) (Meters)	122-106	106-124	102-106	91- 91	106-120
Depth	(Net)	77-80	88-88	77-84	82-75	69-77
Water Temp.	(Deg.C)					
Surface		—	13.0	—	13.0	11.5
Bottom		—	—	—	—	—
Depth	(Meters)					
Type of Gear		20	20	20	20	20
Total Catch	(Kg)	60	125	1925	415	1325
Remarks		Usable	Usable	Usable	Usable	Usable

Appendix Table 6 (cont'd)

Haul No.	21	22	23	24	25
Date	May 30	May 30	May 30	May 31	May 31
Area	BB	BB	BB	BB	BB
Total Catch (kg)	60	125	1925	415	1325
Arrowtooth flounder	—	—	—	—	—
Dover sole	—	—	—	—	—
English sole	—	—	—	—	—
Flathead sole	—	—	—	—	—
Pacific halibut	—	—	—	—	—
Pacific sanddab	—	—	—	—	—
Petrale sole	—	—	—	—	—
Rex sole	—	—	—	—	—
Slender sole	—	—	—	—	—
Subtotal	—	—	—	—	—
S. brevispinis	—	—	—	—	—
S. elongatus	—	—	—	—	—
S. entomelas	—	Tr	50	—	—
S. flavidus	20	80	1800	300	1200
S. paucispinis	—	—	—	—	—
S. proriger	—	—	—	—	—
Subtotal	20	80	1850	300	1200
Chinook salmon	—	25	50	15	25
Eulachon	—	—	—	—	—
Lingcod	—	—	—	—	—
Pacific cod	—	—	—	—	—
Pacific hake	—	—	—	—	—
Pacific herring	5	5	—	Tr	Tr
Sablefish	—	—	—	—	—
Walleye pollock	—	—	—	—	—
Subtotal	5	30	50	15	25
Longnose skate	—	—	—	—	—
Ratfish	—	—	—	—	—
Spiny dogfish	35	15	25	100	100
Subtotal	35	15	25	100	100

Appendix Table 6 (cont'd)

Haul No.		26	27	28	29	30
Date		May 31	May 31	Jun 2	Jun 2	Jun 3
Area		BB	BB	BB	BB	BB
Start Time	(PST)	1705	1815	1205	1658	0715
Duration	(Min)	13	65	67	60	55
Start N. Lat.	(Deg)	048	048	048	048	048
	(Min)	34.4	33.9	36.5	35.4	35.9
W. Long.	(Deg)	125	125	125	125	125
	(Min)	34.6	33.9	34.9	35.4	36.0
Direction (Deg.True)		294	326	142	150	123
Finish N. Lat.	(Deg)	048	048	048	048	048
	(Min)	34.4	36.0	33.8	32.6	33.9
W.Long.	(Deg)	125	125	125	125	125
	(Min)	35.3	36.4	33.5	32.1	33.3
Haul Distance (N.M.)		.46	2.68	2.86	3.56	2.69
Depth	(Bottom) (Meters)	120-118	93-124	131-95	106-131	122-100
Depth	(Net)	—	66-73	88-66	88-73	73-75
Water Temp.	(Deg.C)					
Surface		12.0	—	—	12.0	11.5
Bottom		—	—	—	—	—
Depth	(Meters)					
Type of Gear		20	20	20	20	20
Total Catch	(Kg)	0	285	325	300	265
Remarks		Usable	Usable	Usable	Usable	Usable

Appendix Table 6 (cont'd)

Haul No.	26	27	28	29	30
Date	May 31	May 31	Jun 2	Jun 2	Jun 3
Area	BB	BB	BB	BB	BB
Total Catch (kg)	0	285	325	300	265
Arrowtooth flounder	—	—	—	—	—
Dover sole	—	—	—	—	—
English sole	—	—	—	—	—
Flathead sole	—	—	—	—	—
Pacific halibut	—	—	—	—	—
Pacific sanddab	—	—	—	—	—
Petrale sole	—	—	—	—	—
Rex sole	—	—	—	—	—
Slender sole	—	—	—	—	—
Subtotal	—	—	—	—	—
S. brevispinis	—	—	—	—	Tr
S. elongatus	—	—	—	—	—
S. entomelas	—	150	Tr	Tr	Tr
S. flavidus	—	10	250	200	200
S. paucispinis	—	—	—	Tr	Tr
S. proriger	—	—	—	—	—
Subtotal	—	160	250	200	200
Chinook salmon	—	125	35	—	40
Eulachon	—	—	Tr	—	—
Lingcod	—	—	—	—	—
Pacific cod	—	—	—	—	—
Pacific hake	—	—	Tr	—	—
Pacific herring	—	—	—	—	Tr
Sablefish	—	—	—	—	—
Walleye pollock	—	—	Tr	—	—
Subtotal	—	125	35	—	40
Longnose skate	—	—	—	—	—
Ratfish	—	—	—	—	—
Spiny dogfish	—	—	40	100	25
Subtotal	—	—	40	100	25

Appendix Table 6 (cont'd)

Haul No.		31	32	33	34	35
Date		Jun 3	Jun 3	Jun 3	Jun 4	Jun 4
Area		BB	OS	OS	OS	OS
Start Time	(PST)	1155	1839	2014	0800	1010
Duration	(Min)	45	21	16	61	12
Start N. Lat.	(Deg)	048	048	048	048	048
	(Min)	34.6	28.0	24.9	25.3	24.3
W. Long.	(Deg)	125	124	125	125	125
	(Min)	33.9	55.4	02.6	02.7	00.7
Direction (Deg.True)		300	225	194	173	260
Finish N. Lat.	(Deg)	048	048	048	048	048
	(Min)	36.0	27.7	24.0	24.2	24.2
W.Long.	(Deg)	125	124	125	125	125
	(Min)	36.9	56.7	02.2	00.3	01.7
Haul Distance (N.M.)		2.43	.92	.94	1.94	.67
Depth	(Bottom) (Meters)	100-120	148-109	151-133	129-272	206-155
Depth	(Net)	73-75	66-77	82-88	73-53	101-121
Water Temp.	(Deg.C)					
Surface		12.0	11.0	11.5	10.5	10.5
Bottom		--	--	--	--	--
Depth	(Meters)					
Type of Gear		20	20	20	20	20
Total Catch	(Kg)	275	806	2000	400	3775
Remarks		Usable	Usable	Usable	Usable	Usable

Appendix Table 6 (cont'd)

Haul No.	31	32	33	34	35
Date	Jun 3	Jun 3	Jun 3	Jun 4	Jun 4
Area	BB	OS	OS	OS	OS
Total Catch (kg)	275	806	2000	400	3775
Arrowtooth flounder	--	--	--	--	--
Dover sole	--	--	--	--	--
English sole	--	--	--	--	--
Flathead sole	--	--	--	--	--
Pacific halibut	--	--	--	--	--
Pacific sanddab	--	--	--	--	--
Petrale sole	--	--	--	--	--
Rex sole	--	--	--	--	--
Slender sole	--	--	--	--	--
Subtotal	--	--	--	--	--
S. brevispinis	Tr	--	--	--	--
S. elongatus	--	--	--	--	--
S. entomelas	Tr	--	1000	150	Tr
S. flavidus	225	2	1000	150	75
S. paucispinis	--	--	--	--	--
S. proriger	--	--	--	--	--
Subtotal	225	2	2000	300	75
Chinook salmon	30	4	--	--	--
Eulachon	--	--	--	--	--
Lingcod	--	--	--	--	--
Pacific cod	--	--	--	--	--
Pacific hake	--	--	--	50	3500
Pacific herring	10	Tr	--	--	--
Sablefish	--	--	--	--	--
Walleye pollock	Tr	--	Tr	50	200
Subtotal	40	4	Tr	100	3700
Longnose skate	--	--	--	--	--
Ratfish	--	--	--	--	--
Spiny dogfish	10	800	--	--	--
Subtotal	10	800	--	--	--

Appendix Table 6 (cont'd)

Haul No.		36	37	38	39	40
Date		Jun 4	Jun 4	Jun 4	Jun 4	Jun 5
Area		OS	OS	OS	OS	OS
Start Time	(PST)	1100	1305	1655	1952	0833
Duration	(Min)	36	36	8	13	30
Start N. Lat.	(Deg)	048	048	048	048	048
	(Min)	24.7	26.1	25.5	25.4	25.1
W. Long.	(Deg)	125	125	125	125	125
	(Min)	02.5	04.2	02.6	02.4	02.7
Direction (Deg.True)		023	142	220	193	161
Finish N. Lat.	(Deg)	048	048	048	048	048
	(Min)	26.4	25.0	25.0	24.7	23.8
W.Long.	(Deg)	125	125	125	125	125
	(Min)	02.4	02.6	02.7	02.6	01.8
Haul Distance (N.M.)		1.7	1.5	.50	.71	1.43
Depth	(Bottom) (Meters)	117-181	113-135	166-126	170-120	122-135
Depth	(Net)	88-99	88-97	80-80	84-79	99-99
Water Temp.	(Deg.C)					
Surface		10.5	10.5	11.0	11.0	--
Bottom		--	--	--	--	--
Depth	(Meters)					
Type of Gear		20	20	20	20	20
Total Catch	(Kg)	350	1930	1000	2500	1900
Remarks		Usable	Usable	Usable	Usable	Usable

Appendix Table 6 (cont'd)

Haul No.	36	37	38	39	40
Date	Jun 4	Jun 4	Jun 4	Jun 4	Jun 5
Area	OS	OS	OS	OS	OS
Total Catch (kg)	350	1930	1000	2500	1900
Arrowtooth flounder	--	--	--	--	--
Dover sole	--	--	--	--	--
English sole	--	--	--	--	--
Flathead sole	--	--	--	--	--
Pacific halibut	--	--	--	--	--
Pacific sanddab	--	--	--	--	--
Petrale sole	--	--	--	--	--
Rex sole	--	--	--	--	--
Slender sole	--	--	--	--	--
Subtotal	--	--	--	--	--
S. brevispinis	--	--	--	--	--
S. elongatus	--	--	--	--	--
S. entomelas	Tr	30	Tr	1000	1500
S. flavidus	50	200	200	1200	250
S. paucispinis	--	--	--	--	--
S. proriger	--	--	--	--	--
Subtotal	50	230	200	2200	1750
Chinook salmon	--	--	--	--	--
Eulachon	--	--	--	--	--
Lingcod	--	Tr	--	--	Tr
Pacific cod	--	--	--	--	--
Pacific hake	100	700	700	200	Tr
Pacific herring	--	--	--	--	--
Sablefish	--	--	--	--	--
Walleye pollock	200	1000	100	100	150
Subtotal	300	1700	800	300	150
Longnose skate	--	--	--	--	--
Ratfish	--	--	--	--	--
Spiny dogfish	--	--	--	--	Tr
Subtotal	--	--	--	--	Tr

Appendix Table 6 (cont'd)

Haul No.		41	42	43	44	45
Date		Jun 5	Jun 5	Jun 5	Jun 5	Jun 6
Area		OS	OS	OS	OS	OS
Start Time	(PST)	1232	1523	1653	1938	0831
Duration	(Min)	23	45	50	10	40
Start N. Lat.	(Deg)	048	048	048	048	048
	(Min)	25.4	24.0	24.1	25.1	25.0
W. Long.	(Deg)	125	125	125	125	125
	(Min)	02.5	02.1	01.6	02.5	02.5
Direction (Deg.True)		181	340	317	140	177
Finish N. Lat.	(Deg)	048	048	048	048	048
	(Min)	24.4	23.5	26.4	24.5	23.6
W.Long.	(Deg)	125	125	125	125	125
	(Min)	02.3	01.5	02.6	02.3	01.7
Haul Distance (N.M.)		1.01	.64	2.39	.61	1.49
Depth	(Bottom) (Meters)	168-175	115-184	164-182	164-164	157-171
Depth	(Net)	84-95	88-80	88-91	73-84	77-55
Water Temp.	(Deg.C)					
Surface		10.5	12.0	12.0	--	11.5
Bottom		--	--	--	--	--
Depth	(Meters)					
Type of Gear		20	20	20	20	20
Total Catch	(Kg)	1900	3180	1530	1675	3500
Remarks		Usable	Usable	Usable	Usable	Usable

Appendix Table 6 (cont'd)

Haul No.	41	42	43	44	45
Date	Jun 5	Jun 5	Jun 5	Jun 5	Jun 6
Area	OS	OS	OS	OS	OS
Total Catch (kg)	1900	3180	1530	1675	3500
Arrowtooth flounder	--	--	--	--	--
Dover sole	--	--	--	--	--
English sole	--	--	--	--	--
Flathead sole	--	--	--	--	--
Pacific halibut	--	--	--	--	--
Pacific sanddab	--	--	--	--	--
Petrale sole	--	--	--	--	--
Rex sole	--	--	--	--	--
Slender sole	--	--	--	--	--
Subtotal	--	--	--	--	--
S. brevispinis	--	--	--	--	--
S. elongatus	--	--	--	--	--
S. entomelas	250	Tr	Tr	75	500
S. flavidus	150	30	30	300	3000
S. paucispinis	--	--	--	--	--
S. proriger	--	--	--	--	--
Subtotal	400	30	30	375	3500
Chinook salmon	--	--	--	--	--
Eulachon	--	--	--	--	--
Lingcod	--	--	--	--	--
Pacific cod	--	--	--	--	--
Pacific hake	1000	3000	1500	300	Tr
Pacific herring	--	--	--	--	--
Sablefish	--	--	--	--	--
Walleye pollock	500	150	Tr	1000	Tr
Subtotal	1500	3150	1500	1300	Tr
Longnose skate	--	--	--	--	--
Ratfish	--	--	--	--	--
Spiny dogfish	Tr	Tr	Tr	Tr	--
Subtotal	Tr	Tr	Tr	Tr	--

Appendix Table 6 (cont'd)

Haul No.		46	47	48	49	50
Date		Jun 6	Jun 8	Jun 8	Jun 9	Jun 9
Area		OS	OS	OS	OS	OS
Start Time	(PST)	1545	0703	1229	0837	1330
Duration	(Min)	62	56	54	55	40
Start N. Lat.	(Deg)	048	048	048	048	048
	(Min)	25.2	25.6	26.2	25.7	25.6
W. Long.	(Deg)	125	125	125	125	125
	(Min)	03.1	02.9	03.4	03.1	02.4
Direction (Deg.True)		154	172	149	145	197
Finish N. Lat.	(Deg)	048	048	048	048	048
	(Min)	23.2	24.2	24.1	23.6	23.7
W.Long.	(Deg)	125	125	125	125	125
	(Min)	01.5	01.4	01.9	02.0	01.4
Haul Distance (N.M.)		2.27	1.72	2.33	2.23	2.01
Depth	(Bottom) (Meters)	117-201	160-168	171-146	160-117	170-173
Depth	(Net)	77-101	110-110	110-110	128-82	110-110
Water Temp.	(Deg.C)					
Surface		12.5	11.5	11.5	12.0	12.0
Bottom		--	--	--	--	--
Depth	(Meters)					
Type of Gear		20	20	20	20	20
Total Catch	(Kg)	650	500	900	3000	2200
Remarks		Usable	Usable	Usable	Usable	Usable

Appendix Table 6 (cont'd)

Haul No.	46	47	48	49	50
Date	Jun 6	Jun 8	Jun 8	Jun 9	Jun 9
Area	OS	OS	OS	OS	OS
Total Catch (kg)	650	500	900	3000	2200
Arrowtooth flounder	--	--	--	--	--
Dover sole	--	--	--	--	--
English sole	--	--	--	--	--
Flathead sole	--	--	--	--	--
Pacific halibut	--	--	--	--	--
Pacific sanddab	--	--	--	--	--
Petrale sole	--	--	--	--	--
Rex sole	--	--	--	--	--
Slender sole	--	--	--	--	--
Subtotal	--	--	--	--	--
S. brevispinis	--	--	--	--	--
S. elongatus	--	--	--	--	--
S. entomelas	200	100	200	1000	1200
S. flavidus	250	300	700	2000	1000
S. paucispinis	--	--	--	--	--
S. proriger	--	--	--	--	--
Subtotal	450	400	900	3000	2200
Chinook salmon	--	--	--	--	--
Eulachon	--	--	--	--	--
Lingcod	--	--	--	--	--
Pacific cod	--	--	--	--	--
Pacific hake	200	50	--	--	Tr
Pacific herring	--	--	--	--	--
Sablefish	--	--	--	--	--
Walleye pollock	Tr	50	--	Tr	--
Subtotal	200	100	--	Tr	Tr
Longnose skate	--	--	--	--	--
Ratfish	--	--	--	--	--
Spiny dogfish	Tr	--	--	Tr	Tr
Subtotal	Tr	--	--	Tr	Tr

Appendix Table 6 (cont'd)

Haul No.		51	52	53	54	55
Date		Jun 9	Jun 10	Jun 10	Jun 10	Jun 11
Area		OS	OS	SJ	SJ	SJ
Start Time	(PST)	1840	0815	1437	1640	0724
Duration	(Min)	63	68	67	70	62
Start N. Lat.	(Deg)	048	048	048	048	048
	(Min)	24.1	26.0	31.5	32.6	32.4
W. Long.	(Deg)	125	125	124	124	124
	(Min)	01.7	03.4	51.4	41.2	35.5
Direction (Deg.True)		309	140	090	108	276
Finish N. Lat.	(Deg)	048	048	048	048	048
	(Min)	24.0	23.7	32.1	32.0	33.0
W.Long.	(Deg)	125	125	124	124	124
	(Min)	02.2	01.4	47.1	34.4	42.8
Haul Distance (N.M.)		.35	2.66	2.92	4.56	4.89
Depth	(Bottom) (Meters)	160-111	168-186	146-159	124-91	82-113
Depth	(Net)	80-84	91-84	--	91-73	73-77
Water Temp.	(Deg.C)					
Surface		12.5	12.0	12.5	12.5	11.0
Bottom Depth	(Meters)	--	--	--	--	--
Type of Gear		20	20	20	20	20
Total Catch	(Kg)	375	1025	150	2500	1250
Remarks		Usable	Usable	Usable	Usable	Usable

Appendix Table 6 (cont'd)

Haul No.	51	52	53	54	55
Date	Jun 9	Jun 10	Jun 10	Jun 10	Jun 11
Area	OS	OS	SJ	SJ	SJ
Total Catch (kg)	375	1025	150	2500	1250
Arrowtooth flounder	--	--	--	--	--
Dover sole	--	--	--	--	--
English sole	--	--	--	--	--
Flathead sole	--	--	--	--	--
Pacific halibut	--	--	--	--	--
Pacific sanddab	--	--	--	--	--
Petrale sole	--	--	--	--	--
Rex sole	--	--	--	--	--
Slender sole	--	--	--	--	--
Subtotal	--	--	--	--	--
S. brevispinis	--	--	--	--	--
S. elongatus	--	--	--	--	Tr
S. entomelas	150	Tr	--	--	--
S. flavidus	225	125	100	1500	1250
S. paucispinis	--	--	--	Tr	Tr
S. proriger	--	--	--	--	--
Subtotal	375	125	100	1500	1250
Chinook salmon	Tr	--	--	--	--
Eulachon	--	--	--	--	--
Lingcod	--	--	--	--	--
Pacific cod	--	--	--	--	--
Pacific hake	Tr	200	Tr	1000	Tr
Pacific herring	--	--	Tr	--	--
Sablefish	--	--	--	--	--
Walleye pollock	Tr	700	Tr	Tr	Tr
Subtotal	Tr	900	Tr	1000	Tr
Longnose skate	--	--	--	--	--
Ratfish	--	--	--	--	--
Spiny dogfish	--	--	50	--	--
Subtotal	--	--	50	--	--

Appendix Table 6 (cont'd)

Haul No.	56	57
Date	Jun 11	Jun 11
Area	SJ	SJ
Start Time (PST)	1209	1300
Duration (Min)	28	67
Start N. Lat. (Deg)	048	048
(Min)	32.0	31.2
W. Long. (Deg)	124	124
(Min)	35.5	30.4
Direction (Deg.True)	114	141
Finish N. Lat. (Deg)	048	048
(Min)	31.4	29.4
W.Long. (Deg)	124	124
(Min)	32.2	23.6
Haul Distance (N.M.)	2.27	4.87
Depth (Bottom) (Meters)	106-230	102-100
Depth (Net)	84-84	77-80
Water Temp. (Deg.C)		
Surface	11.0	11.0
Bottom	--	--
Depth (Meters)		
Type of Gear	20	20
Total Catch (Kg)	27	25
Remarks	Usable	Usable

Appendix Table 6 (cont'd)

Haul No.	56	57
Date	Jun 11	Jun 11
Area	SJ	SJ
Total Catch (kg)	27	25
Arrowtooth flounder	Tr	Tr
Dover sole	---	---
English sole	---	---
Flathead sole	---	Tr
Pacific halibut	---	---
Pacific sanddab	---	---
Petrale sole	---	---
Rex sole	---	---
Slender sole	---	---
Subtotal	Tr	Tr
S. brevispinis	---	---
S. elongatus	---	---
S. entomelas	---	---
S. flavidus	2	Tr
S. paucispinis	---	---
S. proriger	---	---
Subtotal	2	Tr
Chinook salmon	---	---
Eulachon	---	---
Lingcod	---	---
Pacific cod	---	---
Pacific hake	10	10
Pacific herring	---	---
Sablefish	---	---
Walleye pollock	10	Tr
Subtotal	20	10
Longnose skate	---	---
Ratfish	---	15
Spiny dogfish	5	---
Subtotal	5	15

Footnotes to Appendix Table 6.

Area:	BB = Big Bank; FB = Finger Bank; OS = Ollie Spot; SJ = San Juan. (General area only; for specific location see Fig. 1.)
Time Start:	Pacific Standard Time
Distance Travelled:	Expressed in nautical miles
Depth (meters):	Depth at start and finish of haul
Water Temperatures: (Deg. C)	Temperatures recorded at surface only
Type of Gear:	3 = Atlantic Western III bottom trawl (for specifications see Appendix Table 4)
	20 = Egeland midwater trawl (for specifications see Appendix Table 2)
Total Catch:	Expressed in kilograms Tr = Trace = < 1 Kg.
Remarks:	Usable haul.

Appendix Table 7

Appendix Table 7. Fishing log for M/V BLUE WATERS rockfish tagging cruise, August 8-22, 1980. (See footnotes for explanation of terms.)

Haul no.		1	2	3	4	5
Date		Aug. 10	Aug. 10	Aug. 10	Aug. 11	Aug. 11
Area		CSS	CSS	CSS	SSI	TK
Start time	(PST)	1032	1248	1657	0620	1100
Duration	(Min)	45	104	116	31	110
Start N. Lat.	(Deg)	051	051	051	050	050
	(Min)	03.9	07.2	06.7	38.0	27.9
W. Long.	(Deg)	129	129	129	128	128
	(Min)	00.2	05.4	06.2	35.0	15.5
Direction (Deg. true)		335	100	180	355	325
Finish N. Lat.	(Deg)	051	051	051	050	050
	(Min)	03.7	03.0	01.1	38.5	26.5
W. Long.	(Deg)	129	129	129	128	128
	(Min)	00.6	00.4	09.2	36.0	13.2
Haul distance	(N.M.)	0.3	5.3	5.9	0.8	2.0
Bottom depth	(m)	104-104	137-104	131-133	113- 69	118-115
Net depth	(m)	59- 62	104- 82	102-106	51- 88	93- 60
Water temp. (Deg. C)						
Surface		13.5	-	15.0	10.0	12.0
Bottom		-	-	-	-	-
Type of gear		21	21	21	21	21
Total catch	(kg)	-	14	4	3	16
Remarks		Usable	Usable	Usable	Usable	Usable

Appendix Table 7 (cont'd)

Haul no.	1	2	3	4	5
Date	Aug. 10	Aug. 10	Aug. 10	Aug. 11	Aug. 11
Area	CSS	CSS	CSS	SSI	TK
Total catch (kg)	0	14	4	3	16
Arrowtooth flounder	-	-	1	-	1
Dover sole	-	-	-	-	-
English sole	-	-	1	-	-
Flathead sole	-	-	-	-	-
Pacific halibut	-	-	-	-	-
Petrale sole	-	-	-	-	-
Rex sole	-	-	-	Tr	-
Rock sole	-	-	-	-	-
Subtotal	-	-	2	Tr	1
S. alutus	-	-	-	-	-
S. babcocki	-	-	-	-	-
S. brevispinis	-	-	-	-	-
S. elongatus	-	-	-	-	-
S. entomelas	-	-	-	-	-
S. flavidus	-	-	-	-	10
S. helvomaculatus	-	-	-	-	-
S. paucispinis	-	-	-	-	4
S. pinniger	-	-	-	-	-
S. proriger	-	-	-	-	-
S. zacentrus	-	-	-	-	-
Seb. alascanus	-	-	-	-	-
Subtotal	-	-	-	-	14
Chinook salmon	-	14	-	-	-
Eulachon	-	-	-	-	Tr
Lingcod	-	-	-	-	-
Pacific cod	-	-	-	-	-
Pacific herring	-	-	1	2	1
Sablefish	-	-	-	-	-
Walleye pollock	-	-	-	-	-
Subtotal	-	14	1	2	1
Ratfish	-	-	1	-	-
Skates	-	-	-	-	-
Spiny dogfish	-	-	-	-	-
Subtotal	-	-	1	-	-

Appendix Table 7 (cont'd)

Haul no.		6	7	8	9	10
Date		Aug. 11	Aug. 12	Aug. 12	Aug. 12	Aug. 12
Area		TK	TK	TK	TK	TK
Start time	(PST)	1447	0645	0942	1230	1504
Duration	(Min)	90	42	59	61	17
Start N. Lat.	(Deg)	050	050	050	050	050
	(Min)	28.8	30.9	27.9	32.1	32.2
W. Long.	(Deg)	128	128	128	128	128
	(Min)	17.9	19.2	13.5	24.6	24.4
Direction (Deg. true)		120	335	285	135	330
Finish N. Lat.	(Deg)	050	050	050	050	050
	(Min)	27.7	32.7	28.4	30.1	33.2
W. Long.	(Deg)	128	128	128	128	128
	(Min)	12.7	20.6	18.4	21.9	24.8
Haul distance	(N.M.)	3.5	2.0	3.2	2.6	1.0
Bottom depth	(m)	118- 96	109- 96	95-137	166-157	164-157
Net depth	(m)	95- 79	64- 75	73- 97	95-128	84- 86
Water temp. (Deg. C)						
Surface		12.5	12.1	12.2	11.8	12.0
Bottom		-	-	-	-	-
Type of gear		21	21	21	21	21
Total catch	(kg)	320	40	115	71	60
Remarks		Usable	Usable	Usable	Usable	Usable

Appendix Table 7 (cont'd)

Haul no.	6	7	8	9	10
Date	Aug. 11	Aug. 12	Aug. 12	Aug. 12	Aug. 12
Area	TK	TK	TK	TK	TK
Total catch (kg)	320	40	115	71	60
Arrowtooth flounder	-	-	-	-	-
Dover sole	-	-	-	-	-
English sole	-	-	-	-	-
Flathead sole	-	-	-	-	-
Pacific halibut	-	-	-	-	-
Petrale sole	-	-	-	-	-
Rex sole	-	-	-	-	-
Rock sole	-	-	-	-	-
Subtotal	-	-	-	-	-
S. alutus	-	-	-	-	-
S. babcocki	-	-	-	1	-
S. brevispinis	2	-	8	2	-
S. elongatus	-	-	-	-	-
S. entomelas	10	-	1	-	-
S. flavidus	300	20	17	60	10
S. helvomaculatus	-	-	-	-	-
S. paucispinis	5	-	20	-	-
S. pinniger	-	-	2	2	-
S. proriger	1	-	50	5	-
S. zacentrus	-	-	-	-	-
Seb. alascanus	-	-	-	-	-
Subtotal	318	20	98	70	10
Chinook salmon	-	-	16	-	-
Eulachon	-	-	-	-	-
Lingcod	-	-	-	-	-
Pacific cod	-	-	-	1	-
Pacific herring	2	20	1	-	50
Sablefish	-	-	-	-	-
Walleye pollock	-	-	-	-	-
Subtotal	2	20	17	1	50
Ratfish	-	-	-	-	-
Skates	-	-	-	-	-
Spiny dogfish	-	-	-	-	-
Subtotal	-	-	-	-	-

Appendix Table 7 (cont'd)

Haul no.		11	12	13	14	15
Date		Aug. 12	Aug. 12	Aug. 13	Aug. 13	Aug. 13
Area		TK	TK	CSS	CSS	CSS
Start time	(PST)	1655	2223	1040	1312	1508
Duration	(Min)	52	64	23	81	21
Start N. Lat.	(Deg)	050	050	051	051	051
	(Min)	33.0	21.3	04.6	10.0	10.0
W. Long.	(Deg)	128	128	128	128	128
	(Min)	19.9	08.4	32.9	41.5	44.8
Direction (Deg. true)		150	245	090	295	110
Finish N. Lat.	(Deg)	050	050	051	051	051
	(Min)	30.3	18.9	04.8	11.6	09.3
W. Long.	(Deg)	128	128	128	128	128
	(Min)	19.0	10.9	37.4	45.3	43.2
Haul distance	(N.M.)	2.8	2.9	2.8	2.9	1.2
Bottom depth	(m)	82-100	122-160	109-117	122-124	98- 91
Net depth	(m)	60- 77	75-137	33- 77	91- 95	62- 64
Water temp.	(Deg. C)					
Surface		13.0	13.0	14.0	15.0	15.0
Bottom		-	-	-	-	-
Type of gear		21	21	21	21	21
Total catch	(kg)	197	282	-	-	-
Remarks		Usable	Usable	Usable	Usable	Usable

Appendix Table 7 (cont'd)

Haul no.	11	12	13	14	15
Date	Aug. 12	Aug. 12	Aug. 13	Aug. 13	Aug. 13
Area	TK	TK	CSS	CSS	CSS
Total catch (kg)	197	282	0	0	0
Arrowtooth flounder	-	-	-	-	-
Dover sole	-	-	-	-	-
English sole	-	-	-	-	-
Flathead sole	-	-	-	-	-
Pacific halibut	-	-	-	-	-
Petrale sole	-	-	-	-	-
Rex sole	-	-	-	-	-
Rock sole	-	-	-	-	-
Subtotal	-	-	-	-	-
S. alutus	-	-	-	-	-
S. babcocki	-	-	-	-	-
S. brevispinis	-	22	-	-	-
S. elongatus	-	-	-	-	-
S. entomelas	-	150	-	-	-
S. flavidus	20	30	-	-	-
S. helvomaculatus	-	-	-	-	-
S. paucispinis	25	-	-	-	-
S. pinniger	-	50	-	-	-
S. proriger	2	25	-	-	-
S. zacentrus	-	-	-	-	-
Seb. alascanus	-	-	-	-	-
Subtotal	47	277	-	-	-
Chinook salmon	-	-	-	-	-
Eulachon	-	1	-	-	-
Lingcod	-	-	-	-	-
Pacific cod	-	-	-	-	-
Pacific herring	150	4	-	-	-
Sablefish	-	-	-	-	-
Walleye pollock	-	-	-	-	-
Subtotal	150	5	-	-	-
Ratfish	-	-	-	-	-
Skates	-	-	-	-	-
Spiny dogfish	-	-	-	-	-
Subtotal	-	-	-	-	-

Appendix Table 7 (cont'd)

Haul no.		16	17	18	19	20
Date		Aug. 13	Aug. 13	Aug. 14	Aug. 14	Aug. 14
Area		CSS	NE	SE	SE	SE
Start time	(PST)	1646	2127	0707	1021	1224
Duration	(Min)	44	46	55	34	32
Start N. Lat.	(Deg)	051	051	051	051	051
	(Min)	10.9	26.9	25.6	23.3	25.8
W. Long.	(Deg)	128	129	129	129	129
	(Min)	42.1	01.0	06.7	12.8	06.0
Direction (Deg. true)		090	090	260	080	082
Finish N. Lat.	(Deg)	051	051	051	051	051
	(Min)	09.3	27.5	24.2	24.1	26.5
W. Long.	(Deg)	128	128	129	129	129
	(Min)	39.7	57.2	10.6	10.4	03.2
Haul distance	(N.M.)	2.2	2.4	2.8	1.7	1.9
Bottom depth	(m)	106-124	124-117	124-142	228-146	128-124
Net depth	(m)	73- 99	86- 99	79-123	210-128	91-102
Water temp. (Deg. C)						
Surface		15.0	15.0	15.0	15.0	15.0
Bottom		-	-	-	-	-
Type of gear		21	21	21	21	21
Total catch	(kg)	-	2502	100	98	5450
Remarks		Usable	Usable	Usable	Usable	Usable

Appendix Table 7 (cont'd)

Haul no.	16	17	18	19	20
Date	Aug. 13	Aug. 13	Aug. 14	Aug. 14	Aug. 14
Area	CSS	NE	SE	SE	SE
Total catch (kg)	0	2502	100	98	5450
Arrowtooth flounder	-	1	100	80	-
Dover sole	-	-	-	-	-
English sole	-	Tr	-	1	-
Flathead sole	-	Tr	-	-	-
Pacific halibut	-	-	-	-	-
Petrale sole	-	-	-	-	-
Rex sole	-	Tr	-	-	-
Rock sole	-	Tr	-	-	-
Subtotal	-	1	100	81	-
S. alutus	-	-	-	-	-
S. babcocki	-	-	-	-	-
S. brevispinis	-	1	-	5	-
S. elongatus	-	-	-	-	-
S. entomelas	-	2488	-	-	2
S. flavidus	-	5	-	-	5443
S. helvomaculatus	-	-	-	-	-
S. paucispinis	-	-	-	-	-
S. pinniger	-	-	-	-	-
S. proriger	-	-	-	-	-
S. zacentrus	-	-	-	-	-
Seb. alascanus	-	-	-	-	-
Subtotal	-	2494	-	5	5445
Chinook salmon	-	-	-	-	-
Eulachon	-	-	-	-	-
Lingcod	-	-	-	-	-
Pacific cod	-	1	-	6	-
Pacific herring	-	Tr	Tr	-	5
Sablefish	-	1	-	6	-
Walleye pollock	-	5	-	-	-
Subtotal	-	7	Tr	12	5
Ratfish	-	-	-	-	-
Skates	-	-	-	-	-
Spiny dogfish	-	-	-	-	-
Subtotal	-	-	-	-	-

Appendix Table 7 (cont'd)

Haul no.		21	22	23	24	25
Date		Aug. 14	Aug. 14	Aug. 14	Aug. 15	Aug. 15
Area		SE	SE	SE	SE	SE
Start time	(PST)	1827	1955	2215	0718	0925
Duration	(Min)	41	30	45	42	20
Start N. Lat.	(Deg)	051	051	051	051	051
	(Min)	25.8	26.4	26.1	26.7	25.1
W. Long.	(Deg)	129	129	129	129	129
	(Min)	03.5	02.8	06.0	01.5	08.6
Direction (Deg. true)		050	270	080	075	040
Finish N. Lat.	(Deg)	051	051	051	051	051
	(Min)	26.6	26.2	27.3	27.0	25.6
W. Long.	(Deg)	129	129	129	128	129
	(Min)	02.5	05.2	02.3	58.3	07.3
Haul distance	(N.M.)	1.3	1.5	2.6	2.0	0.9
Bottom depth	(m)	155-131	137-120	109- 98	131-133	124-115
Net depth	(m)	124-112	110-106	91- 75	108-113	101-104
Water temp. (Deg. C)						
Surface		14.5	14.5	14.5	14.5	14.5
Bottom		-	-	-	-	-
Type of gear		21	21	21	21	21
Total catch	(kg)	2	158	2221	21	226
Remarks		Usable	Usable	Usable	Usable	Usable

Appendix Table 7 (cont'd)

Haul no.	21	22	23	24	25
Date	Aug. 14	Aug. 14	Aug. 14	Aug. 15	Aug. 15
Area	SE	SE	SE	SE	SE
Total catch (kg)	2	158	2221	21	226
Arrowtooth flounder	-	-	5	3	2
Dover sole	-	-	-	-	-
English sole	-	-	-	-	-
Flathead sole	-	-	-	-	-
Pacific halibut	-	-	-	-	10
Petrale sole	-	-	-	-	-
Rex sole	-	1	-	-	Tr
Rock sole	-	-	100	-	Tr
Subtotal	-	1	105	3	12
S. alutus	-	-	-	-	-
S. babcocki	-	-	-	-	-
S. brevispinis	-	-	20	-	2
S. elongatus	-	-	-	-	-
S. entomelas	-	-	15	-	-
S. flavidus	2	155	1750	-	-
S. helvomaculatus	-	-	-	-	-
S. paucispinis	-	-	5	-	-
S. pinniger	-	-	-	-	-
S. proriger	-	-	-	-	-
S. zacentrus	-	-	-	-	-
Seb. alascanus	-	-	-	-	-
Subtotal	2	155	1790	-	2
Chinook salmon	-	-	-	-	-
Eulachon	-	-	-	-	-
Lingcod	-	-	-	-	2
Pacific cod	-	1	25	-	-
Pacific herring	Tr	-	-	-	200
Sablefish	-	-	10	18	Tr
Walleye pollock	-	1	223	-	-
Subtotal	Tr	2	258	18	202
Ratfish	-	-	-	-	-
Skates	-	-	60	-	10
Spiny dogfish	-	-	8	-	-
Subtotal	-	-	68	-	10

Appendix Table 7 (cont'd)

Haul no.		26	27	28	29	30
Date		Aug. 15	Aug. 15	Aug. 16	Aug. 16	Aug. 16
Area		SE	SE	SW	SW	SW
Start time	(PST)	1045	1531	0809	1443	1527
Duration	(Min)	19	56	61	20	31
Start N. Lat.	(Deg)	051	051	051	051	051
	(Min)	26.0	26.2	32.5	26.4	26.4
W. Long.	(Deg)	129	129	129	129	129
	(Min)	05.6	05.3	39.4	15.1	16.9
Direction (Deg. true)		070	070	125	210	220
Finish N. Lat.	(Deg)	051	051	051	051	051
	(Min)	26.2	27.3	30.6	26.3	26.5
W. Long.	(Deg)	129	129	129	129	129
	(Min)	04.4	01.9	36.0	16.7	18.7
Haul distance	(N.M.)	0.8	2.4	2.8	1.0	1.1
Bottom depth	(m)	122-126	115-104	142-135	89- 95	93- 95
Net depth	(m)	88-112	84- 90	71-104	-	-
Water temp. (Deg. C)						
Surface		15.4	15.0	14.2	15.0	15.0
Bottom		-	-	-	-	-
Type of gear		21	21	21	3	3
Total catch	(kg)	1501	-	-	4	21
Remarks		Usable	Usable	Usable	Usable	Usable

Appendix Table 7 (cont'd)

Haul no.	26	27	28	29	30
Date	Aug. 15	Aug. 15	Aug. 16	Aug. 16	Aug. 16
Area	SE	SE	SW	SW	SW
Total catch (kg)	1501	0	0	4	21
Arrowtooth flounder	-	-	-	-	-
Dover sole	-	-	-	-	-
English sole	-	-	-	-	-
Flathead sole	-	-	-	-	-
Pacific halibut	-	-	-	-	-
Petrale sole	-	-	-	-	-
Rex sole	Tr	-	-	-	-
Rock sole	-	-	-	4	1
Subtotal	Tr	-	-	4	1
S. alutus	-	-	-	-	-
S. babcocki	-	-	-	-	-
S. brevispinis	-	-	-	-	-
S. elongatus	-	-	-	-	-
S. entomelas	-	-	-	-	-
S. flavidus	1500	-	-	-	-
S. helvomaculatus	-	-	-	-	-
S. paucispinis	-	-	-	-	-
S. pinniger	-	-	-	-	-
S. proriger	-	-	-	-	-
S. zacentrus	-	-	-	-	-
Seb. alascanus	-	-	-	-	-
Subtotal	1500	-	-	-	-
Chinook salmon	-	-	-	-	-
Eulachon	-	-	-	-	-
Lingcod	-	-	-	-	20
Pacific cod	-	-	-	-	-
Pacific herring	Tr	-	-	-	-
Sablefish	1	-	-	-	-
Walleye pollock	-	-	-	-	-
Subtotal	1	-	-	-	20
Ratfish	-	-	-	-	-
Skates	-	-	-	-	-
Spiny dogfish	-	-	-	-	-
Subtotal	-	-	-	-	-

Appendix Table 7 (cont'd)

Haul no.		31	32	33	34	35
Date		Aug. 16	Aug. 16	Aug. 16	Aug. 16	Aug. 17
Area		SE	SE	SE	SE	SE
Start time	(PST)	1720	1759	1845	2120	0622
Duration	(Min)	15	14	40	95	28
Start N. Lat.	(Deg)	051	051	051	051	051
	(Min)	24.7	25.3	25.6	26.6	26.5
W. Long.	(Deg)	129	129	129	129	129
	(Min)	10.3	11.5	06.2	03.0	02.2
Direction (Deg. true)		285	090	060	250	260
Finish N. Lat.	(Deg)	051	051	051	051	051
	(Min)	25.1	25.4	26.2	25.9	26.1
W. Long.	(Deg)	129	129	129	129	129
	(Min)	11.4	10.4	03.5	05.1	04.3
Haul distance	(N.M.)	0.8	0.7	1.8	1.5	1.4
Bottom depth	(m)	106-100	98- 96	138-137	126-128	135-133
Water temp. (Deg. C)						
Surface		15.0	15.0	15.0	15.0	15.0
Bottom		-	-	-	-	-
Type of gear		3	3	3	3	3
Total catch	(kg)	57	14	1501	492	314
Remarks		Usable	Usable	Usable	Usable	Usable

Appendix Table 7 (cont'd)

Haul no.	31	32	33	34	35
Date	Aug. 16	Aug. 16	Aug. 16	Aug. 16	Aug. 17
Area	SE	SE	SE	SE	SE
Total catch (kg)	57	14	1501	492	314
Arrowtooth flounder	-	-	8	2	40
Dover sole	-	-	Tr	-	-
English sole	-	-	-	5	2
Flathead sole	-	-	-	-	-
Pacific halibut	15	8	-	-	-
Petrale sole	-	-	-	-	-
Rex sole	-	-	2	5	2
Rock sole	2	2	5	-	-
Subtotal	17	10	15	12	44
S. alutus	-	-	-	-	-
S. babcocki	-	-	-	-	-
S. brevispinis	-	-	38	150	85
S. elongatus	-	-	-	-	-
S. entomelas	-	-	-	5	8
S. flavidus	-	-	150	150	150
S. helvomaculatus	-	-	-	-	-
S. paucispinis	-	-	25	-	12
S. pinniger	-	-	-	-	-
S. proriger	-	-	-	-	-
S. zacentrus	-	-	-	-	-
Seb. alascanus	-	-	-	-	-
Subtotal	-	-	213	305	255
Chinook salmon	-	-	-	-	-
Eulachon	-	-	-	-	-
Lingcod	40	4	-	-	1
Pacific cod	-	-	8	-	2
Pacific herring	-	-	-	-	-
Sablefish	-	-	1250	150	-
Walleye pollock	-	-	15	8	2
Subtotal	40	4	1273	158	5
Ratfish	-	-	-	-	-
Skates	-	-	-	2	-
Spiny dogfish	-	-	-	15	10
Subtotal	-	-	-	17	10

Appendix Table 7 (cont'd)

Haul no.		36	37	38	39	40
Date		Aug. 17	Aug. 17	Aug. 18	Aug. 18	Aug. 18
Area		SE	SE	TrI	TrI	CSS
Start time	(PST)	0728	1139	0745	1601	1711
Duration	(Min)	44	51	43	36	40
Start N. Lat.	(Deg)	051	051	051	051	051
	(Min)	26.0	24.1	11.5	11.8	10.8
W. Long.	(Deg)	129	129	128	128	128
	(Min)	04.4	09.9	44.8	44.6	41.2
Direction (Deg. true)		270	030	080	090	140
Finish N. Lat.	(Deg)	051	051	051	051	051
	(Min)	25.3	25.2	11.1	11.4	03.3
W. Long.	(Deg)	129	129	128	128	128
	(Min)	07.3	07.3	42.2	42.1	39.4
Haul distance	(N.M.)	1.9	1.9	1.7	1.6	1.6
Bottom depth	(m)	135-133	155-142	117-115	131-131	137-128
Water temp. (Deg. C)						
Surface		14.8	-	14.0	14.0	-
Bottom		-	-	-	-	-
Type of gear		3	3	3	3	3
Total catch	(kg)	5975	2608	400	2406	500
Remarks		Usable	Usable	Usable	Usable	Usable

Appendix Table 7 (cont'd)

Haul no.	36	37	38	39	40
Date	Aug. 17	Aug. 17	Aug. 18	Aug. 18	Aug. 18
Area	SE	SE	CSS	CSS	CSS
Total catch (kg)	5975	2608	400	2406	500
Arrowtooth flounder	200	2000	-	-	-
Dover sole	-	-	-	-	-
English sole	-	-	-	-	-
Flathead sole	-	-	-	-	-
Pacific halibut	-	2	-	4	-
Petrale sole	-	-	-	-	-
Rex sole	25	-	-	-	-
Rock sole	-	-	-	-	-
Subtotal	225	2002	-	4	-
S. alutus	-	-	-	-	-
S. babcocki	-	-	-	-	-
S. brevispinis	1500	10	100	100	500
S. elongatus	-	-	-	-	-
S. entomelas	25	-	-	750	-
S. flavidus	3500	200	200	1500	-
S. helvomaculatus	-	-	-	-	-
S. paucispinis	50	20	-	-	-
S. pinniger	50	-	-	5	-
S. proriger	-	-	-	-	-
S. zacentrus	-	-	-	-	-
Seb. alascanus	-	-	-	-	-
Subtotal	5125	230	300	2355	500
Chinook salmon	-	-	-	-	-
Eulachon	-	-	-	-	-
Lingcod	-	200	40	2	-
Pacific cod	25	3	-	-	-
Pacific herring	-	-	-	-	-
Sablefish	500	123	-	-	-
Walleye pollock	100	-	-	-	-
Subtotal	625	326	40	2	-
Ratfish	-	-	-	-	-
Skates	-	50	60	45	-
Spiny dogfish	-	-	-	-	-
Subtotal	-	50	60	45	-

Appendix Table 7 (cont'd)

Haul no.		41	42	43	44	45
Date		Aug. 18	Aug. 18	Aug. 19	Aug. 19	Aug. 19
Area		CSS	CSS	CSS	CSS	CSS
Start time	(PST)	2015	2240	0633	0725	1055
Duration	(Min)	95	100	35	40	60
Start N. Lat.	(Deg)	051	051	051	051	051
	(Min)	10.0	11.1	11.9	11.6	11.7
W. Long.	(Deg)	128	128	128	128	128
	(Min)	39.2	44.8	46.0	42.9	44.4
Direction (Deg. true)		320	120	110	100	100
Finish N. Lat.	(Deg)	051	051	051	051	051
	(Min)	11.8	00.7	11.7	10.6	10.5
W. Long.	(Deg)	128	128	128	128	128
	(Min)	45.0	41.6	43.5	40.6	40.5
Haul distance	(N.M.)	4.0	2.6	1.5	1.8	2.7
Bottom depth	(m)	135~131	106~113	133~129	128~142	129~135
Water temp. (Deg. C)						
Surface		-	-	13.9	13.9	-
Bottom		-	-	-	-	-
Type of gear		3	3	3	3	3
Total catch	(kg)	2633	728	-	670	-
Remarks		Usable	Usable	Usable	Usable	Usable

Appendix Table 7 (cont'd)

Haul no.	41	42	43	44	45
Date	Aug. 18	Aug. 18	Aug. 19	Aug. 19	Aug. 19
Area	CSS	CSS	CSS	CSS	CSS
Total catch (kg)	2633	728	0	670	0
Arrowtooth flounder	20	-	-	-	-
Dover sole	-	-	-	-	-
English sole	10	40	-	-	-
Flathead sole	-	-	-	-	-
Pacific halibut	2	67	-	4	-
Petrale sole	5	50	-	-	-
Rex sole	Tr	-	-	Tr	-
Rock sole	-	50	-	Tr	-
Subtotal	37	207	-	4	-
S. alutus	-	-	-	-	-
S. babcocki	-	-	-	-	-
S. brevispinis	1000	-	-	223	-
S. elongatus	-	-	-	-	-
S. entomelas	20	-	-	-	-
S. flavidus	1500	123	-	75	-
S. helvomaculatus	-	-	-	-	-
S. paucispinis	8	10	-	10	-
S. pinniger	4	-	-	-	-
S. proriger	-	-	-	-	-
S. zacentrus	-	-	-	-	-
Seb. alascanus	-	-	-	-	-
Subtotal	2532	133	-	308	-
Chinook salmon	-	-	-	-	-
Eulachon	-	-	-	-	-
Lingcod	12	100	-	20	-
Pacific cod	2	5	-	323	-
Pacific herring	-	-	-	-	-
Sablefish	25	15	-	15	-
Walleye pollock	25	-	-	-	-
Subtotal	64	120	-	358	-
Ratfish	Tr	18	-	-	-
Skates	-	250	-	-	-
Spiny dogfish	-	-	-	-	-
Subtotal	Tr	268	-	-	-

Appendix Table 7 (cont'd)

Haul no.		46	47	48	49	50
Date		Aug. 19	Aug. 19	Aug. 19	Aug. 19	Aug. 20
Area		CSS	CSS	SE	SE	SE
Start time	(PST)	1225	1615	1906	2025	0609
Duration	(Min)	60	30	29	68	25
Start N. Lat.	(Deg)	051	051	051	051	051
	(Min)	10.7	15.8	26.5	26.4	25.6
W. Long.	(Deg)	128	128	129	129	129
	(Min)	40.8	46.6	03.1	03.5	06.0
Direction (Deg. true)		290	120	245	270	080
Finish N. Lat.	(Deg)	051	051	051	051	051
	(Min)	11.8	14.6	26.0	24.9	25.8
W. Long.	(Deg)	128	128	129	129	129
	(Min)	44.1	45.1	04.8	08.3	04.0
Haul distance	(N.M.)	2.3	1.5	1.2	3.3	1.3
Bottom depth	(m)	140-129	195-195	131-133	129-137	138-149
Water temp. (Deg. C)						
Surface		13.9	-	14.0	-	-
Bottom		-	-	-	-	-
Type of gear		3	3	3	3	3
Total catch	(kg)	612	177	4402	7750	345
Remarks		Usable	Usable	Usable	Usable	Usable

Appendix Table 7 (cont'd)

Haul no.	46	47	48	49	50
Date	Aug. 19	Aug. 19	Aug. 19	Aug. 19	Aug. 20
Area	CSS	CSS	SE	SE	SE
Total catch (kg)	612	177	4402	7750	345
Arrowtooth flounder	-	Tr	Tr	700	150
Dover sole	-	15	-	-	-
English sole	-	-	-	-	Tr
Flathead sole	-	Tr	-	-	-
Pacific halibut	5	-	-	-	-
Petrale sole	-	-	-	-	-
Rex sole	Tr	-	-	-	-
Rock sole	Tr	-	-	-	-
Subtotal	5	15	Tr	700	150
S. alutus	-	40	-	-	-
S. babcocki	-	4	-	-	-
S. brevispinis	230	10	1250	700	80
S. elongatus	-	-	112	-	-
S. entomelas	Tr	-	-	-	-
S. flavidus	195	-	2900	6000	80
S. helvomaculatus	-	Tr	-	-	-
S. paucispinis	-	8	135	350	15
S. pinniger	5	-	Tr	-	5
S. proriger	-	15	-	-	-
S. zacentrus	-	20	-	-	-
Seb. alascanus	-	Tr	-	-	-
Subtotal	430	97	4397	7050	180
Chinook salmon	-	-	-	-	-
Eulachon	-	-	-	-	-
Lingcod	4	-	-	-	-
Pacific cod	140	20	-	-	2
Pacific herring	-	-	-	-	-
Sablefish	8	10	-	-	5
Walleye pollock	-	25	-	-	8
Subtotal	152	55	-	-	15
Ratfish	-	10	-	-	-
Skates	25	-	-	-	-
Spiny dogfish	-	-	5	-	-
Subtotal	25	10	5	-	-

Appendix Table 7 (cont'd)

Haul no.		51	52	53	54	55
Date		Aug. 20	Aug. 20	Aug. 20	Aug. 20	Aug. 20
Area		SE	SE	SE	SE	SE
Start time	(PST)	0709	0905	1045	1154	1314
Duration	(Min)	40	30	35	46	38
Start N. Lat.	(Deg)	051	051	051	051	051
	(Min)	26.2	25.8	26.6	26.0	24.8
W. Long.	(Deg)	129	129	129	129	129
	(Min)	04.8	04.5	02.4	05.6	07.1
Direction (Deg. true)		260	090	265	300	070
Finish N. Lat.	(Deg)	051	051	051	051	051
	(Min)	25.4	26.2	26.0	25.1	25.6
W. Long.	(Deg)	129	129	129	129	129
	(Min)	07.2	02.4	04.8	08.5	04.6
Haul distance	(N.M.)	1.7	1.4	1.6	2.0	1.7
Bottom depth	(m)	126-131	142-144	129-129	128-120	159-149
Water temp. (Deg. C)						
Surface		14.0	14.0	14.0	-	-
Bottom		-	-	-	-	-
Type of gear		3	3	3	3	3
Total catch	(kg)	2092	285	1147	492	3854
Remarks		Usable	Usable	Usable	Usable	Usable

Appendix Table 7 (cont'd)

Haul no.	51	52	53	54	55
Date	Aug. 20	Aug. 20	Aug. 20	Aug. 20	Aug. 20
Area	SE	SE	SE	SE	SE
Total catch (kg)	2092	285	1147	492	3854
Arrowtooth flounder	150	Tr	20	-	50
Dover sole	-	-	-	-	-
English sole	Tr	-	Tr	-	Tr
Flathead sole	-	-	-	-	-
Pacific halibut	4	-	-	22	4
Petrale sole	-	-	2	-	-
Rex sole	Tr	-	-	-	-
Rock sole	-	-	-	-	-
Subtotal	154	Tr	22	22	54
S. alutus	-	-	-	-	-
S. babcocki	-	-	-	-	-
S. brevispinis	1000	70	1000	150	25
S. elongatus	-	-	-	-	-
S. entomelas	10	-	-	-	-
S. flavidus	750	25	-	15	-
S. helvomaculatus	-	-	-	-	-
S. paucispinis	30	-	50	15	25
S. pinniger	-	-	-	-	-
S. proriger	-	-	-	-	-
S. zacentrus	-	-	-	-	-
Seb. alascanus	-	-	-	-	-
Subtotal	1790	95	1050	180	50
Chinook salmon	-	-	-	-	-
Eulachon	-	-	-	-	-
Lingcod	25	-	20	50	-
Pacific cod	123	-	5	40	-
Pacific herring	-	-	-	-	-
Sablefish	Tr	190	50	-	3750
Walleye pollock	-	-	-	-	-
Subtotal	148	190	75	90	3750
Ratfish	-	-	-	-	-
Skates	-	-	-	200	-
Spiny dogfish	-	-	-	-	-
Subtotal	-	-	-	200	-

Appendix Table 7 (cont'd)

Haul no.		56	57	58	59
Date		Aug. 20	Aug. 20	Aug. 20	Aug. 20
Area		SE	SE	SE	CSS
Start time	(PST)	1443	1710	1815	2130
Duration	(Min)	34	30	30	30
Start N. Lat.	(Deg)	051	051	051	051
	(Min)	25.1	26.8	26.3	15.1
W. Long.	(Deg)	129	129	129	128
	(Min)	02.3	01.6	04.4	51.3
Direction (Deg. true)		090	240	230	090
Finish N. Lat.	(Deg)	051	051	051	051
	(Min)	25.4	26.5	25.8	15.1
W. Long.	(Deg)	129	129	129	128
	(Min)	00.3	03.5	06.1	48.1
Haul distance	(N.M.)	1.3	1.2	1.2	2.0
Bottom depth	(m)	175-175	126-126	126-129	197-199
Water temp. (Deg. C)					
Surface		-	14.0	14.1	-
Bottom		-	-	-	-
Type of gear		3	3	3	3
Total catch	(kg)	610	1000	1383	225
Remarks		Usable	Usable	Usable	Usable

Appendix Table 7 (cont'd)

Haul no.	56	57	58	59
Date	Aug. 20	Aug. 20	Aug. 20	Aug. 20
Area	SE	SE	SE	CSS
Total catch (kg)	610	1000	1383	225
Arrowtooth flounder	10	10	223	20
Dover sole	-	-	-	-
English sole	-	-	-	-
Flathead sole	5	-	-	-
Pacific halibut	7	20	-	-
Petrale sole	-	-	-	-
Rex sole	-	-	-	-
Rock sole	-	-	-	-
Subtotal	22	30	223	20
S. alutus	125	-	-	150
S. babcocki	3	-	-	-
S. brevispinis	-	900	400	5
S. elongatus	-	-	-	-
S. entomelas	-	-	-	-
S. flavidus	-	-	750	-
S. helvomaculatus	-	-	-	-
S. paucispinis	-	15	5	-
S. pinniger	-	-	-	-
S. proriger	Tr	-	-	Tr
S. zacentrus	-	-	-	-
Seb. alascanus	-	-	-	-
Subtotal	128	915	1155	155
Chinook salmon	-	-	-	-
Eulachon	-	-	-	-
Lingcod	-	Tr	-	-
Pacific cod	-	50	-	-
Pacific herring	-	-	-	-
Sablefish	450	Tr	-	Tr
Walleye pollock	10	-	5	Tr
Subtotal	460	50	5	Tr
Ratfish	-	-	-	Tr
Skates	-	5	-	50
Spiny dogfish	-	-	-	-
Subtotal	-	5	-	50

Footnotes to Appendix Table 7.

Area: CSS = Cape Scott Spit
SSI = South Scott Island
TK = Topknot
NE = North East Goose Island Gully
SE = South East Goose Island Gully
SW = South West Goose Island Gully
TrI = Triangle Island

General area only; for haul location see Fig. 2.

Time Start: Pacific standard time.

Distance Travelled: Expressed in nautical miles.

Depth (meters): Depth at start and finish of haul.

Water Temperatures (Deg. C): Temperature recorded at surface only.

Type of Gear: 21 = Canadian Diamond VII midwater trawl (for specifications see Appendix Table 3).
3 = Atlantic Western III bottom trawl (for specifications see Appendix Table 4).

Total Catch: Expressed in kilograms. Tr = Trace = <1 kg.

Remarks: Usable haul.

Appendix Table 8. Scientific and common names of species captured during both tagging cruises.

Common name	Scientific name
FLATFISH	
Arrowtooth flounder	*Atheresthes stomias*
Dover sole	*Microstomus pacificus*
English sole	*Parophrys vetulus*
Flathead sole	*Hippoglossoides elassodon*
Pacific halibut	*Hippoglossus stenolepis*
Pacific sanddab	*Citharichthys sordidus*
Petrale sole	*Eopsetta jordani*
Rex sole	*Glyptocephalus zachirus*
Rock sole	*Lepidopsetta bilineata*
Slender sole	*Lyopsetta exilis*
ROUNDFISH	
Pacific ocean perch	*Sebastes alutus*
Redbanded rockfish	*Sebastes babcocki*
Silvergrey rockfish	*Sebastes brevispinis*
Greenstripe rockfish	*Sebastes elongatus*
Widow rockfish	*Sebastes entomelas*
Yellowtail rockfish	*Sebastes flavidus*
Rosethorn rockfish	*Sebastes helvomaculatus*
Bocaccio	*Sebastes paucispinis*
Canary rockfish	*Sebastes pinniger*
Redstriped rockfish	*Sebastes proriger*
Sharpchin rockfish	*Sebastes zacentrus*
Shortspine thornyhead or idiot	*Sebastolobus alascanus*
Chinook salmon	*Oncorhynchus tshawytscha*
Eulachon	*Thaleichthys pacificus*
Lingcod	*Ophiodon elongatus*
Pacific cod	*Gadus macrocephalus*
Pacific hake	*Merluccius productus*
Pacific herring	*Clupea harengus pallasi*
Sablefish	*Anoplopoma fimbria*
Walleye pollock	*Theragra chalcogramma*
SELACHII	
Longnose skate	*Raja rhina*
Ratfish	*Hydrolagus colliei*
Skates	Family Rajidae
Spiny dogfish	*Squalus acanthias*