Government of Canada | Gouvernement du Canada

Canadian General Standards Board | Office des normes générales du Canada

Series 4

Série des 4

WITHDRAWAL

March 2019

Selected standards in the series Textiles

These National Standards of Canada are hereby withdrawn as information contained therein may no longer represent the most current, reliable, and/or available information on these subjects.

The Standards Council of Canada requires that accredited Standards Development Organizations, such as the CGSB, regularly review a consensus Standard to determine whether to re-approve, revise or withdraw. The review cycle is normally five years from the publication date of the latest edition of the Standard. CGSB retains the right to develop new editions.

The information contained in these Standards was originally developed pursuant to a voluntary standards development initiative of the CGSB. The information contained therein may no longer represent the most current, reliable, and/or available information on these subjects. CGSB hereby disclaims any and all claims, representation or warranty of scientific validity, or technical accuracy implied or expressed respecting the information therein contained. The CGSB shall not take responsibility nor be held liable for any errors, omissions, inaccuracies or any other liabilities that may arise from the provision or subsequent use of such information.

RETRAIT

Mars 2019

Sélection de normes de la série Textiles

Ces Normes nationales du Canada sont retirées par le présent avis car l'information contenue peut ne plus représenter l'information disponible et/ou l'information la plus actuelle ou la plus fiable à ce sujet.

Le Conseil canadien des normes exige que les organismes accrédités d'élaboration de normes, tel que l'ONGC, effectue régulièrement un examen des normes consensuelles afin de déterminer s'il y a lieu d'en renouveler l'approbation, de les réviser ou de les retirer. Le cycle d'examen d'une norme est généralement de cinq ans à partir de la date de publication de la dernière édition de celle-ci. L'ONGC se réserve le droit d'élaborer de nouvelles éditions.

L'information contenue dans ces normes a été élaborée initialement en vertu d'une initiative volontaire d'élaboration de normes de l'ONGC. Elle peut ne plus représenter l'information disponible et/ou l'information la plus actuelle ou la plus fiable à ce sujet. L'ONGC décline par la présente toute responsabilité à l'égard de toute affirmation, déclaration ou garantie de validité scientifique ou d'exactitude technique implicite ou explicite relative à l'information contenue dans ces normes. L'ONGC n'assumera aucune responsabilité et ne sera pas tenu responsable quant à toute erreur, omission, inexactitude ou autre conséquence pouvant découler de la fourniture ou de l'utilisation subséquente de cette information.

Copies of withdrawn standards are available from the CGSB Sales Centre by telephone at 819-956-0425 or 1-800-665-2472, by fax at 819-956-5740, by Internet at www.tpsgc-pwgsc.gc.ca/ongc-cgsb/index-eng.html, by e-mail at ncr.CGSB-ONGC@tpsgc-pwgsc.gc.ca or by mail at Sales Centre, Canadian General Standards Board, 11 Laurier Street, Gatineau, Canada K1A 1G6.

Des copies des normes retirées peuvent être obtenues auprès du Centre des ventes de l'ONGC. Il suffit d'en faire la demande par téléphone au 819-956-0425 ou 1-800-665-2472, par télécopieur au 819-956-5740, par Internet à : www.tpsgc-pwgsc.gc.ca/ongc-cgsb/index-fra.html, par courriel à ncr.CGSB-ONGC@tpsgc-pwgsc.gc.ca, ou par courrier adressé au Centre des ventes, Office des normes générales du Canada, 11, rue Laurier, Gatineau, Canada K1A 1G6.

CAN/CGSB-4.2

Textile test methods

No. 4.5-M86

Retail packages of yarn — Determination of mass (ICS 59.080.20)

No. 5.2-M87

Linear density of yarn in SI units (ICS 59.080.20)

No. 9.2-M90

Breaking strength of fabrics — Grab method — Constant-time-to-break principle (ICS 59.080.30)

No. 9.3-M90

Breaking strength of high-strength fabrics — Constant-time-to-break principle (ICS 59.080.30)

No. 9.4-M91

Breaking strength of yarns — Single strand method (ICS 59.080.20)

No. 9.5-M89

Breaking strength of yarns — Skein method (ICS 59.080.20)

No. 9.6-93

Breaking strength of nonwoven textiles (ICS 59.080.30)

CAN/CGSB-4.2

Méthodes pour épreuves textiles

Nº 4.5-M86

Bobines de fil vendues au détail — Détermination de la masse (ICS 59.080.20)

Nº 5.2-M87

Masse linéique du fil en unités SI (ICS 59.080.20)

Nº 9.2-M90

Résistance à la rupture des tissus — Méthode d'arrachement — Principe de rupture à temps constant (ICS 59.080.30)

Nº 9.3-M90

Résistance à la rupture des tissus de haute résistance — Principe de rupture à temps constant (ICS 59.080.30)

Nº 9.4-M91

Résistance à la rupture des fils — Méthode à fil simple (ICS 59.080.20)

Nº 9.5-M89

Résistance à la rupture des fils — Méthode de l'écheveau (ICS 59.080.20)

Nº 9.6-93

Résistance à la rupture des non-tissés (ICS 59.080.30)

No. 10-M87

Elongation (ICS 59.080.30)

No. 23-M90

Colourfastness to perspiration
(ICS 59.080.01)

No. 25.2-M89

Dimensional change of textile fabrics to open-head steaming (ICS 59.080.30)

No. 26.1-M88

Water resistance — Static head penetration test (ICS 59.080.01)

No. 26.5-M89

Water resistance — High-pressure penetration test (ICS 59.080.30)

No. 28.2-M91

Resistance to micro-organisms — Surface-growing fungus test — Pure culture
(ICS 59.080.01)

No. 28.4-M91

Resistance to micro-organisms — Fungus damage test — Pure culture — Qualitative
(ICS 59.080.01)

No. 30.1-M89

Effect of solvents on the permanence of textile finishes (ICS 59.080.01)

No. 32.1-98

Resistance of woven fabrics to seam slippage (ICS 59.080.01)

Nº 10-M87

Allongement (ICS 59.080.30)

Nº 23-M90

Solidité de la couleur à la sueur
(ICS 59.080.01)

Nº 25.2-M89

Changement dimensionnel des textiles à l'aide d'une presse à plateau inférieur vaporisant (ICS 59.080.30)

Nº 26.1-M88

Résistance à l'eau — Essai de pénétration sous pression constante
(ICS 59.080.01)

Nº 26.5-M89

Résistance à l'eau — Essai de pénétration à haute pression
(ICS 59.080.30)

Nº 28.2-M91

Résistance aux micro-organismes — Essai par fongus se propageant en surface — En culture pure
(ICS 59.080.01)

Nº 28.4-M91

Résistance aux micro-organismes — Évaluation des dommages causés par fongus — En culture pure — Qualitative
(ICS 59.080.01)

Nº 30.1-M89

Effet des solvants sur la permanence des apprêts textiles (ICS 59.080.01)

Nº 32.1-98

Résistance des tissés au glissement de la couture (ICS 59.080.01)

No. 35.1-M90

Colourfastness to burnt gas fumes (ICS 59.080.01)

No. 37-2002

Fabric thickness (ICS 59.080.30)

No. 42-M91

Copper content of textiles (ICS 59.080.01)

No. 45-M88

Textile fabrics — Determination of the recovery from creasing of a horizontally folded specimen by measuring the angle-of-recovery (ICS 59.080.01)

No. 49-99

Resistance of materials to water vapour diffusion (ICS 59.080.01)

No. 55-M90

Loss in strength and colour change of fabrics due to retained chlorine (ICS 59.080.01)

No. 56.1-M87

Unidirectional extension and recovery properties of elastic fabrics (ICS 59.080.30)

No. 60-M89

Resistance to snagging — Mace test (ICS 59.080.01)

No. 65-M91

Determination of strength of bonds of bonded, laminated and fused fabrics (ICS 59.080.10)

Nº 35.1-M90

Solidité de la couleur aux produits de combustion des gaz (ICS 59.080.01)

Nº 37-2002

Épaisseur des tissus (ICS 59.080.30)

Nº 42-M91

Teneur en cuivre des textiles (ICS 59.080.01)

Nº 45-M88

Étoffes — Détermination de l'auto-défroissabilité d'un spécimen plié horizontalement par mesurage de l'angle rémanent après pliage (ICS 59.080.01)

Nº 49-99

Résistance des textiles à la diffusion de vapeur d'eau (ICS 59.080.01)

Nº 55-M90

Perte de résistance et changement de couleur des tissus causés par la rétention de chlore (ICS 59.080.01)

Nº 56.1-M87

Évaluation de l'extension unidirectionelle et de la récupération dimensionnelle des tissus élastiques (ICS 59.080.30)

Nº 60-M89

Résistance aux accrocs — Essai à la masse (ICS 59.080.01)

Nº 65-M91

Détermination de la résistance du liage des tissus contre-collés, stratifiés et thermocollés (ICS 59.080.10)

No. 66-M91

Dimensional change and appearance after dry cleaning of coated, bonded, laminated and fused fabrics (ICS 59.080.40)

Nº 66-M91

Évaluation du changement dimensionnel et de l'aspect des tissus enduits, contre-collés, stratifiés et thermocollés à la suite de nettoyages à sec (ICS 59.080.40)

No. 69-M91

Weather resistance — Xenon arc radiation (ICS 59.080.10)

Nº 69-M91

Résistance aux intempéries — Rayonnement d'une lampe à arc au xénon (ICS 59.080.10)

No. 78.1-2001

Thermal protective performance of materials for clothing (ICS 59.080.01)

Nº 78.1-2001

Évaluation de la protection thermique des matériaux de confection des vêtements (ICS 59.080.01)

CAN/CGSB-4.155-M88

Flammability of soft floor coverings — Sampling plans (ICS 59.080.60)

CAN/CGSB-4.155-M88

Résistance à l'inflammation des revêtements de sol mous — Plans d'échantillonnage (ICS 59.080.60)

CAN/CGSB-4.158-75

Designation of yarns (ICS 59.080.20)

CAN/CGSB-4.158-75

Désignation des fils (ICS 59.080.20)

CAN/CGSB-4.159-75

Universal system for designating linear density (Tex system) (ICS 59.080.20)

CAN/CGSB-4.159-75

Système universel de désignation de la masse linéique (système Tex) (ICS 59.080.20)

CAN/CGSB-4.160-75

Integrated conversion table for replacing traditional yarn numbers by rounded values in the Tex system (ICS 59.080.20)

CAN/CGSB-4.160-75

Table générale de conversion pour le remplacement des titres traditionnels des fils par des valeurs arrondies du système Tex (ICS 59.080.20)

Government of Canada | Gouvernement du Canada

Canadian General Standards Board | Office des normes générales du Canada

CAN/CGSB-4.2
No. 49-99

Supersedes CAN/CGSB-4.2
No. 49-M91
Reaffirmed
November 2013

Textile test methods

Resistance of materials to water vapour diffusion

ICS 59.080.01

Standards Council of Canada
Conseil canadien des normes

National Standard of Canada

Canada

Experience and excellence
Expérience et excellence

CGSB ONGC

The CANADIAN GENERAL STANDARDS BOARD (CGSB), under whose auspices this standard has been developed, is a government agency within Public Works and Government Services Canada. CGSB is engaged in the production of voluntary standards in a wide range of subject areas through the media of standards committees and the consensus process. The standards committees are composed of representatives of relevant interests including producers, consumers and other users, retailers, governments, educational institutions, technical, professional and trade societies, and research and testing organizations. Any given standard is developed on the consensus of views expressed by such representatives.

CGSB has been accredited by the Standards Council of Canada as a national standards-development organization. The standards that it develops and offers as National Standards of Canada conform to the criteria and procedures established for this purpose by the Standards Council of Canada. In addition to standards it publishes as National Standards of Canada, CGSB produces standards to meet particular needs, in response to requests from a variety of sources in both the public and private sectors. Both CGSB standards and CGSB national standards are developed in conformance with the policies described in the CGSB Policy and Procedures Manual for the Development and Maintenance of Standards.

CGSB standards are subject to review and revision to ensure that they keep abreast of technological progress. CGSB will initiate the review of this standard within five years of the date of publication. Suggestions for their improvement, which are always welcome, should be brought to the notice of the standards committees concerned. Changes to standards are issued either as separate amendment sheets or in new editions of standards.

An up-to-date listing of CGSB standards, including details on latest issues and amendments, and ordering instructions, is found in the CGSB Catalogue at our Web site — www.tpsgc-pwgsc.gc.ca/ongc-cgsb along with more information about CGSB products and services.

Although the intended primary application of this standard is stated in its Scope, it is important to note that it remains the responsibility of the users of the standard to judge its suitability for their particular purpose.

The testing and evaluation of a product against this standard may require the use of materials and/or equipment that could be hazardous. This document does not purport to address all the safety aspects associated with its use. Anyone using this standard has the responsibility to consult the appropriate authorities and to establish appropriate health and safety practices in conjunction with any applicable regulatory requirements prior to its use. CGSB neither assumes nor accepts any responsibility for any injury or damage that may occur during or as the result of tests, wherever performed.

Attention is drawn to the possibility that some of the elements of this Canadian standard may be the subject of patent rights. CGSB shall not be held responsible for identifying any or all such patent rights. Users of this standard are expressly advised that determination of the validity of any such patent rights is entirely their own responsibility.

Further information on CGSB and its services and standards may be obtained from:

The Manager
Standards Division
Canadian General Standards Board
Gatineau, Canada
K1A 1G6

The Standards Council of Canada (SCC) is the coordinating body of the Canadian standardization network, which is composed of people and organizations involved in the development, promotion and implementation of standards. Through the collaborative efforts of Canadian standardization network members, standardization is helping to advance the social and economic well-being of Canada and to safeguard the health and safety of Canadians. The network's efforts are overseen by SCC. The principal objectives of SCC are to foster and promote voluntary standardization as a means of advancing the national economy, supporting sustainable development, benefiting the health, safety and welfare of workers and the public, assisting and protecting the consumer, facilitating domestic and international trade, and furthering international cooperation in relation to standardization.

An important facet of the Canadian standards development system is the use of the following principles: consensus; equal access and effective participation by concerned interests; respect for diverse interests and identification of those who should be afforded access to provide the needed balance of interests; mechanism for dispute resolution; openness and transparency; open access by interested parties to the procedures guiding the standards development process; clarity with respect to the processes; and Canadian interest consideration as the initial basis for the development of standards. A National Standard of Canada (NSC) is a standard prepared or reviewed by an SCC-accredited SDO and approved by the SCC according to NSC approval requirements. Approval does not refer to the technical content of the standard, as this remains the responsibility of the SDO. An NSC reflects a consensus of a number of capable individuals whose collective interests provide, to the greatest practicable extent, a balance of representation of general interests, producers, regulators, users (including consumers) and others with relevant interests, as may be appropriate to the subject at hand. NSCs are intended to make a significant and timely contribution to the Canadian interest.

Those who have a need to apply standards are encouraged to use NSCs. These standards are subject to periodic review. Users of NSCs are cautioned to obtain the latest edition from the SDO that publishes the standard.

The responsibility for approving standards as NSCs rests with:

Standards Council of Canada
270 Albert Street, Suite 200
Ottawa, Ontario K1P 6N7, CANADA

NATIONAL STANDARD OF CANADA

CAN/CGSB-4.2
No. 49-99

Supersedes CAN/CGSB-4.2
No. 49-M91
Reaffirmed
November 2013

Textile test methods

Resistance of materials to water vapour diffusion

CETTE NORME NATIONALE DU CANADA EST DISPONIBLE EN VERSIONS FRANÇAISE ET ANGLAISE.

Prepared by the
Canadian General Standards Board

Approved by the
Standards Council of Canada
Conseil canadien des normes

Published March 1999 by the
Canadian General Standards Board
Gatineau, Canada K1A 1G6

CANADIAN GENERAL STANDARDS BOARD

Committee on Textile Test Methods and Terminology

(Voting membership at date of reaffirmation)

General interest category

Batcheller, J.	University of Alberta
Carrick, D.	Consultant
Davie, N.	Consultant
Liu, S.	University of Manitoba
Man, T.M.	Consultant
Tait, C.	National Defence/DSSPM

Producer category

Adam, C.	Tencate Protective Fabrics Canada
Boivin, D.	E.I. DuPont Co.
Lawson, L.	Davey Textile Solutions
Leblanc, J.-M.	Marv Holland Apparel Ltd.
Schumann, E.	Lincoln Fabrics Ltd.
Taylor, V.	Invista (Canada) Co.

Regulator category

Andersson, C.	Health Canada

User category

Bourget, S.	National Defence/QETE
D'Entremont, E.	Royal Canadian Mounted Police
Izquierdo, V.	Textile Technologies Centre
Kohli, G.	Sears Canada Inc.
Larsen, A.-L.	Exova Group Ltd.
Litva, M.	Canada Border Services Agency
MacLeod, J.	Public Works and Government Services Canada
Tebbs, C.	International Drycleaners Congress

Secretary (non-voting)

Grabowski, M.	Canadian General Standards Board

Acknowledgment is made for the translation of this National Standard of Canada by the Translation Bureau of Public Works and Government Services Canada.

CAN/CGSB-4.2
No. 49-99

Supersedes CAN/CGSB-4.2
No. 49-M91
Reaffirmed
November 2013

Preface to the National Standard of Canada

This National Standard of Canada has been reaffirmed by the CGSB Committee on Textile Test Methods and Terminology. Editorial changes have been made by the correction of the following paragraphs:

15.1 The publications referred to in par. 3.1.1 may be obtained from the Canadian General Standards Board, Sales Centre, Gatineau, Canada K1A 1G6. Telephone 819-956-0425 or 1-800-665-2472. Fax 819-956-5740. E-mail ncr.cgsb-ongc@tpsgc-pwgsc.gc.ca. Web site www.tpsgc-pwgsc.gc.ca/ongc-cgsb.

15.2 The publication referred to in par. 3.1.2 may be obtained from ASTM International, 100 Barr Harbor Drive, West Conshohocken, PA 19428-2959, U.S.A., telephone 610-832-9585, fax 610-832-9555, Web site www.astm.org, or from IHS Global Canada Ltd., 200-1331 MacLeod Trail SE, Calgary, Alberta T2G 0K3, telephone 613-237-4250 or 1-800-267-8220, fax 613-237-4251, Web site www.global.ihs.com.

National Standard of Canada

CGSB Ottawa Canada K1A 1G6	TEXTILE TEST METHODS	CAN/CGSB-4.2
	Resistance of Materials to Water Vapour Diffusion	**No. 49-99**

Supersedes CAN/CGSB-4.2
No. 49-M91
Reaffirmed
November 2013

1. PURPOSE AND SCOPE

1.1 This method is intended for use in determining the resistance of textile materials to water vapour diffusion.

1.2 Three options[1] are available for testing, allowing for the resistance to water vapour diffusion of a textile material to be determined at one, or more, of three positions within the air gap of the test apparatus.

1.3 The testing and evaluation of a product against this method may require the use of materials and/or equipment that could be hazardous. This document does not purport to address all the safety aspects associated with its use. Anyone using this method has the responsibility to consult the appropriate authorities and to establish appropriate health and safety practices in conjunction with any applicable regulatory requirements prior to its use.

2. PRINCIPLE

2.1 A test specimen is sandwiched between two layers of microporous polytetrafluoroethylene (PTFE) film, one layer separating the specimen from a stream of dried air and the other forming the bottom of a dish of water. The test specimen is placed at one of three positions within the test apparatus. The rate of diffusion of water vapour through the sandwich is calculated from the loss in mass of the water from the dish as a function of time. The water vapour resistance of the sandwich is then calculated. The resistance of the specimen is determined from the difference in the value for the sandwich to that obtained for the two films without the specimen in place.

3. REFERENCED PUBLICATIONS

3.1 The following publications are referenced in this method:

3.1.1 Canadian General Standards Board (CGSB)

CAN/CGSB-4.2 — Textile Test Methods:

No. 1 — Precision and Accuracy of Measurements

No. 2 — Conditioning Textile Materials for Testing.

3.1.2 American Society for Testing and Materials (ASTM)

D 4230 — Standard Test Method for Measuring Humidity with Cooled-Surface Condensation (Dew-Point) Hygrometer.

3.2 A reference to a regulation is always to the latest issue. A dated reference is to the issue specified. An undated reference is to the latest issue, unless otherwise specified by the authority applying this method. The sources are given in the Notes section (Section 15).

[1] *Information which may be useful in the selection of option can be found in Appendix A.*

OPTION 1 — Test Specimen Placed Approximately Equidistant Between the Base (Dry Airflow) and the Cylinder (Water Cell)

4. APPARATUS

4.1 The test measuring cell is shown in detail in Figure 1 which also indicates the approximate dimensions. Essentially, the cell consists of two components, an upper plexiglass cylinder which slides into a plexiglass base plate. The bottom of the plexiglass cylinder is made of a sheet of microporous PTFE film[2] supported by a metal screen (0.61 mm wire with 6.35 mm spacing), held in place by a 3 mm aluminum spacer ring fastened to the base of the cylinder. To prevent leakage of water vapour between the cylinder and spacer ring, a rubber "O" ring is placed in position prior to fastening the spacer ring to the cylinder base. To ensure a uniform water temperature across the cell, a circular copper disc 0.56 mm thick and a diameter 2 mm less than that of the cylinder is fixed in position about 1 mm above the PTFE base of the cylinder. The plexiglass base plate also has a layer of PTFE in its top covered by a 16 mesh (16 wires per 10 cm) screen made from No. 23 B and S gauge wire, on which the specimen under test is placed. Beneath this PTFE layer, airflow is forced around a baffle system to cause turbulence, preventing dead air spaces.[3]

4.2 A balance, capable of determining the mass of the cylinder filled with water and having a readability of at least 0.01 g.[4]

4.3 A supply of dry air capable of delivery at a rate of 4 ± 0.5 L/min to the base of the water vapour diffusion cell.

4.3.1 Air may be supplied by a compressed air line, a cylinder or an air pump. However, to ensure that air is dry before entering the base of the apparatus, it should be passed through two gas drying tubes containing an 8 mesh indicating desiccant.[5] The actual flow should be controlled by a suitable flowmeter.

4.4 Equipment to measure the water temperature to an accuracy of ±0.1°C.

4.5 The room or cabinet where the test is to be performed shall have a controlled humidity and temperature (conditions as in CAN/CGSB-4.2 No. 2) to minimize water temperature variations during the actual test.

5. TEST SPECIMENS[6]

5.1 At least four circular test specimens, with a diameter sufficient to cover the opening of the base, shall be cut from each sample in such a way that no two specimens contain the same warp or weft yarns, and shall not be taken from creased or damaged areas of the sample.

5.2 Condition the specimens in accordance with CAN/CGSB-4.2 No. 2.

5.3 Unless otherwise requested, perform the test so that the side of the test specimen intended to face the water vapour source is facing the water cylinder, and report the orientation used.

6. PROCEDURE

6.1 Assemble the water diffusion cell and connect air lines as shown in Figure 2A or 2B.

6.2 Pour distilled water into the cylinder and allow to come to room temperature.

---

[2] *The commercial product Gore-Tex with* 0.45 µm *average pore size, which has been found satisfactory, may be obtained from S.E.A. Engineering Company, Inc., 25 Fairbanks St., Dartmouth, Nova Scotia B3A 4S9. Telephone (902) 469-1230. A membrane with* 0.2 µm *pore size has also been found satisfactory, and may be obtained from from Labcor Technical Sales, 1-800-363-5900, Catalogue No. E-02916-58, Membranes – Teflon.*

[3] *Equipment that generates comparable results is available from S.E.A. Engineering Company, Inc., 25 Fairbanks St., Dartmouth, Nova Scotia B3A 4S9. Telephone (902) 469-1230.*

[4] *A balance with a capacity of at least* 1000 g *is required. A direct reading top loading balance is found to be particularly advantageous.*

[5] *"Drierite" has been found satisfactory.*

[6] *If the precision of the results is specified, refer to CAN/CGSB-4.2 No. 1 to determine the number of test specimens required; otherwise, at least four specimens shall be tested.*

6.3 Position the specimen within the water vapour diffusion cell in the following order from bottom to top: base, specimen, cylinder.

6.4 To determine the resistance of the apparatus, perform steps in par. 6.5 with no specimen in place. To ensure stability of the cell, it is recommended that these blank runs be performed before and after each sample test (set of four specimen determinations) and the blank runs averaged.

6.5 Turn on the airflow, adjusting it to 4 ± 0.5 L/min. Allow to stabilize for approximately 45 min. Remove and weigh the cylinder as quickly as possible to minimize exposure of the sample to ambient conditions, recording mass, water temperature and time to the nearest 15 s. Replace the cylinder and run for approximately 30 min. Reweigh and repeat the above two more times for a total of four readings. After the last three readings (with specimen in place), the average mass of water vapour transmitted is calculated. If the last three readings fall within ±5% of the average then the test is terminated. If not, then the test continues at 30 min intervals and the average is calculated at each additional interval (last three readings) until the readings fall within ±5%[7] or until a 3¼ h period (from start of the test) is reached, whichever occurs first. All 5 masses of water loss shall be used in the calculation if the 3¼ h period is reached.

6.6 Repeat the above determinations for each specimen.

OPTION 2 — Test Specimen Placed Closer to the Cylinder (Water Cell) than to the Base (Dry Airflow)

7. APPARATUS

7.1 The test measuring cell is shown in detail in Figure 1 which also indicates the approximate dimensions. Essentially, the cell consists of two components, an upper plexiglass cylinder which slides into a plexiglass base plate. The bottom of the plexiglass cylinder is made of a sheet of microporous PTFE film[8] supported by a metal screen (0.61 mm wire with 6.35 mm spacing), held in place by a 3 mm aluminum spacer ring fastened to the base of the cylinder. To prevent leakage of water vapour between the cylinder and spacer ring, a rubber "O" ring is placed in position prior to fastening the spacer ring to the cylinder base. To ensure a uniform water temperature across the cell, a circular copper disc 0.56 mm thick and a diameter 2 mm less than that of the cylinder is fixed in position about 1 mm above the PTFE base of the cylinder. The plexiglass base plate also has a layer of PTFE in its top covered by a 16 mesh (16 wires per 10 cm) screen made from No. 23 B and S gauge wire, on which the specimen under test is placed. Beneath this PTFE layer, airflow is forced around a baffle system to cause turbulence, preventing dead air spaces.[9]

7.2 One rigid spacer ring, 6 mm thick, is included in all determinations (blank runs included). The inside area of the spacer ring should be equal to the exposed water area.

7.3 Double-sided tape,[10] or other adhesive material of similar thickness, to attach the specimen to the one side of the spacer ring (to alleviate sagging of the specimen).

7.4 A balance, capable of determining the mass of the cylinder filled with water and having a readability of at least 0.01 g.[11]

[7] *When calculating the ±5% range, round the figures to the nearest* 0.01 g.

[8] *The commercial product Gore-Tex with* 0.45 µm *average pore size, which has been found satisfactory, may be obtained from S.E.A. Engineering Company, Inc., 25 Fairbanks St., Dartmouth, Nova Scotia B3A 4S9. Telephone (902) 469-1230. A membrane with* 0.2 µm *pore size has also been found satisfactory, and may be obtained from from Labcor Technical Sales, 1-800-363-5900, Catalogue No. E-02916-58, Membranes – Teflon.*

[9] *Equipment that generates comparable results is available from S.E.A. Engineering Company, Inc., 25 Fairbanks St., Dartmouth, Nova Scotia B3A 4S9. Telephone (902) 469-1230.*

[10] *3M double-sided "Scotch Tape" has been found suitable. This tape is approximately* 0.1 mm *thick and* 12 mm *wide.*

[11] *A balance with a capacity of at least* 1000 g *is required. A direct reading top loading balance is found to be particularly advantageous.*

7.5 A supply of dry air capable of delivery at a rate of 4 ± 0.5 L/min to the base of the water vapour diffusion cell.

7.5.1 Air may be supplied by a compressed air line, a cylinder or an air pump. However, to ensure that air is dry before entering the base of the apparatus, it should be passed through two gas drying tubes containing an 8 mesh indicating desiccant.[12] The actual flow should be controlled by a suitable flowmeter.

7.6 Equipment to measure the water temperature to an accuracy of ±0.1°C.

7.7 The room or cabinet where the test is to be performed shall have a controlled humidity and temperature (conditions as in CAN/CGSB-4.2 No. 2) to minimize water temperature variations during the actual test.

8. TEST SPECIMENS[13]

8.1 At least four circular test specimens, with a diameter sufficient to cover the opening of the base, shall be cut from each sample in such a way that no two specimens contain the same warp or weft yarns, and shall not be taken from creased or damaged areas of the sample.

8.2 Condition the specimens in accordance with CAN/CGSB-4.2 No. 2.

8.3 Affix the specimen to one side of the 6 mm spacer ring using double-sided tape. Unless otherwise requested, perform the test so that the side of the test specimen intended to face the water vapour source is facing the water cylinder, and report the orientation used.

9. PROCEDURE

9.1 Assemble the water diffusion cell and connect air lines as shown in Figure 2A or 2B.

9.2 Pour distilled water into the cylinder and allow to come to room temperature.

9.3 Position the specimen within the water vapour diffusion cell in the following order from bottom to top:

base, 6 mm spacer ring, specimen, cylinder.

9.4 To determine the resistance of the apparatus, perform steps in par. 9.5 with no specimen in place. To ensure stability of the cell, it is recommended that these blank runs be performed before and after each sample test (set of four specimen determinations) and the blank runs averaged.

9.5 Turn on the airflow, adjusting it to 4 ± 0.5 L/min. Allow to stabilize for approximately 45 min. Remove and weigh the cylinder as quickly as possible to minimize exposure of the sample to ambient conditions, recording mass, water temperature and time to the nearest 15 s. Replace the cylinder and run for approximately 30 min. Reweigh and repeat the above two more times for a total of four readings. After the last three readings (with specimen in place), the average mass of water vapour transmitted is calculated. If the last three readings fall within ±5% of the average then the test is terminated. If not, then the test continues at 30 min intervals and the average is calculated at each additional interval (last three readings) until the readings fall within ±5%[14] or until a 3¼ h period (from start of the test) is reached, whichever occurs first. All 5 masses of water loss shall be used in the calculation if the 3¼ h period is reached.

9.6 Repeat the above determinations for each specimen.

[12] *"Drierite" has been found satisfactory.*

[13] *If the precision of the results is specified, refer to CAN/CGSB-4.2 No. 1 to determine the number of test specimens required; otherwise, at least four specimens shall be tested.*

[14] *When calculating the ±5% range, round the figures to the nearest* 0.01 g.

OPTION 3 — Test Specimen Placed Closer to the Base (Dry Airflow) than to the Cylinder (Water Cell)

10. APPARATUS

10.1 The test measuring cell is shown in detail in Figure 1 which also indicates the approximate dimensions. Essentially, the cell consists of two components, an upper plexiglass cylinder which slides into a plexiglass base plate. The bottom of the plexiglass cylinder is made of a sheet of microporous PTFE film[15] supported by a metal screen (0.61 mm wire with 6.35 mm spacing), held in place by a 3 mm aluminum spacer ring fastened to the base of the cylinder. To prevent leakage of water vapour between the cylinder and spacer ring, a rubber "O" ring is placed in position prior to fastening the spacer ring to the cylinder base. To ensure a uniform water temperature across the cell, a circular copper disc 0.56 mm thick and a diameter 2 mm less than that of the cylinder is fixed in position about 1 mm above the PTFE base of the cylinder. The plexiglass base plate also has a layer of PTFE in its top covered by a 16 mesh (16 wires per 10 cm) screen made from No. 23 B and S gauge wire, on which the specimen under test is placed. Beneath this PTFE layer, airflow is forced around a baffle system to cause turbulence, preventing dead air spaces.[16]

10.2 One rigid spacer ring, 6 mm thick, is included in all determinations (blank runs included). The inside area of the spacer ring should be equal to the exposed water area.

10.3 A balance, capable of determining the mass of the cylinder filled with water and having a readability of at least 0.01 g.[17]

10.4 A supply of dry air capable of delivery at a rate of 4 ± 0.5 L/min to the base of the water vapour diffusion cell.

10.4.1 Air may be supplied by a compressed air line, a cylinder or an air pump. However, to ensure that air is dry before entering the base of the apparatus, it should be passed through two gas drying tubes containing an 8 mesh indicating desiccant.[18] The actual flow should be controlled by a suitable flowmeter.

10.5 Equipment to measure water temperature to an accuracy of ±0.1°C.

10.6 The room or cabinet where the test is to be performed shall have a controlled humidity and temperature (conditions as in CAN/CGSB-4.2 No. 2) to minimize water temperature variations during the actual test.

11. TEST SPECIMENS[19]

11.1 At least four circular test specimens, with a diameter sufficient to cover the opening of the base, shall be cut from each sample in such a way that no two specimens contain the same warp or weft yarns, and shall not be taken from creased or damaged areas of the sample.

11.2 Condition the specimens in accordance with CAN/CGSB-4.2 No. 2.

11.3 Unless otherwise requested, perform the test so that the side of the test specimen intended to face the water vapour source is facing the water cylinder, and report the orientation used.

---

[15] *The commercial product Gore-Tex with* 0.45 µm *average pore size, which has been found satisfactory, may be obtained from S.E.A. Engineering Company, Inc., 25 Fairbanks St., Dartmouth, Nova Scotia B3A 4S9. Telephone (902) 469-1230. A membrane with* 0.2 µm *pore size has also been found satisfactory, and may be obtained from from Labcor Technical Sales, 1-800-363-5900, Catalogue No. E-02916-58, Membranes – Teflon.*

[16] *Equipment that generates comparable results is available from S.E.A. Engineering Company, Inc., 25 Fairbanks St., Dartmouth, Nova Scotia B3A 4S9. Telephone (902) 469-1230.*

[17] *A balance with a capacity of at least* 1000 g *is required. A direct reading top loading balance is found to be particularly advantageous.*

[18] *"Drierite" has been found satisfactory.*

[19] *If the precision of the results is specified, refer to CAN/CGSB-4.2 No. 1 to determine the number of test specimens required; otherwise, at least four specimens shall be tested.*

12. PROCEDURE

12.1 Assemble the water diffusion cell and connect air lines as shown in Figure 2A or 2B.

12.2 Pour distilled water into the cylinder and allow to come to room temperature.

12.3 Position the specimen within the water vapour diffusion cell in the following order from bottom to top:

base, specimen, 6 mm spacer ring, cylinder.

12.4 To determine the resistance of the apparatus, perform steps in par. 12.5 with no specimen in place. To ensure stability of the cell, it is recommended that these blank runs be performed before and after each sample test (set of four specimen determinations) and the blank runs averaged.

12.5 Turn on the airflow, adjusting it to 4 ± 0.5 L/min. Allow to stabilize for approximately 45 min. Remove and weigh the cylinder as quickly as possible to minimize exposure of the sample to ambient conditions, recording mass, water temperature and time to the nearest 15 s. Replace the cylinder and run for approximately 30 min. Reweigh and repeat the above two more times for a total of four readings. After the last three readings (with specimen in place), the average mass of water vapour transmitted is calculated. If the last three readings fall within ±5% of the average then the test is terminated. If not, then the test continues at 30 min intervals and the average is calculated at each additional interval (last three readings) until the readings fall within ±5%[20] or until a 3¼ h period (from start of the test) is reached, whichever occurs first. All 5 masses of water loss shall be used in the calculation if the 3¼ h period is reached.

12.6 Repeat the above determinations for each specimen.

13. CALCULATIONS

13.1 For each specimen tested, calculate the slope using mass and time to determine the water vapour transmitted per second M_x (kg/s).

13.2 Determine the average mass of water vapour transmitted per unit time M (kg/s) from the two or more individual determinations of M_x (kg/s).

13.3 Calculate R, the vapour resistance of a square metre area of the sandwich, using the relation:

$$R = A\ \Delta P/M$$

where:

A = the area of the specimen exposed to the water vapour, in m^2

ΔP = the difference in partial pressure of water vapour across the sandwich in Pa. This is equal to the saturation vapour pressure.[21]

M = the average mass of water vapour transmitted per unit time, in kg/s

13.4 Calculate R_B, the vapour resistance of the empty cell, using the above equation (par. 13.1, 13.2 and 13.3) and the data for the blank runs.

13.5 Calculate R_m, the vapour resistance of a unit area of the material, in $m^2Pa{\cdot}s/kg$, using:

$$R_m = R - R_B$$

[20] *When calculating the ±5% range, round the figures to the nearest* 0.01 g.

[21] *Saturation vapour pressure over water may be taken from ASTM D 4230, Table X3.1.*

13.6 Convert this value of R to units of millimetres of equivalent still air, D_m, by dividing by R_{AIR}. R_{AIR} is the resistance of one millimetre of still air at 20°C and one atmosphere of pressure.[22]

$$D_m = R_m/R_{AIR}$$

14. REPORT

14.1 Report the Option used.

14.2 Report the test specimen orientation within the test cell.

14.3 Report the average diffusion resistance of the sample tested in millimetre equivalent thickness of still air, D_m.

14.4 Report the average diffusion resistance, R_B, of the apparatus without the specimen in place.

14.5 Report the maximum and minimum water temperature obtained during testing of the specimens.

14.6 Report the number of this method: CAN/CGSB-4.2 No. 49-99.

15. NOTES

15.1 The publications referred to in par. 3.1.1 may be obtained from the Canadian General Standards Board, Sales Centre, Ottawa, Canada K1A 1G6. Telephone (819) 956-0425 or 1-800-665-CGSB (Canada only). Fax (819) 956-5644.

15.2 The publication referred to in par. 3.1.2 may be obtained from the American Society for Testing and Materials, 100 Barr Harbor Drive, West Conshohocken, PA 19428-2959, U.S.A., telephone (610) 832-9585, or from the Global Info Centre Canada, 240 Catherine Street, Suite 305, Ottawa, Ontario K2P 2G8, telephone (613) 237-4250 or 1-800-854-7179, fax (613) 237-4251.

[22] *The resistance of one millimetre of still air,* R_{AIR}, *is* 5.4 × 106 $m^2Pa{\cdot}s/kg$, *at* 20°C *and* 101.3 kPa. *For other conditions of temperature and pressure, it varies as:*

$$R_{AIR} = 5.4 \times 10^6 \frac{P}{101.3} \left(\frac{T}{293} \right)^{1.81}$$

where:

P = *atmospheric pressure in kilopascals*

T = *water temperature in Kelvin*

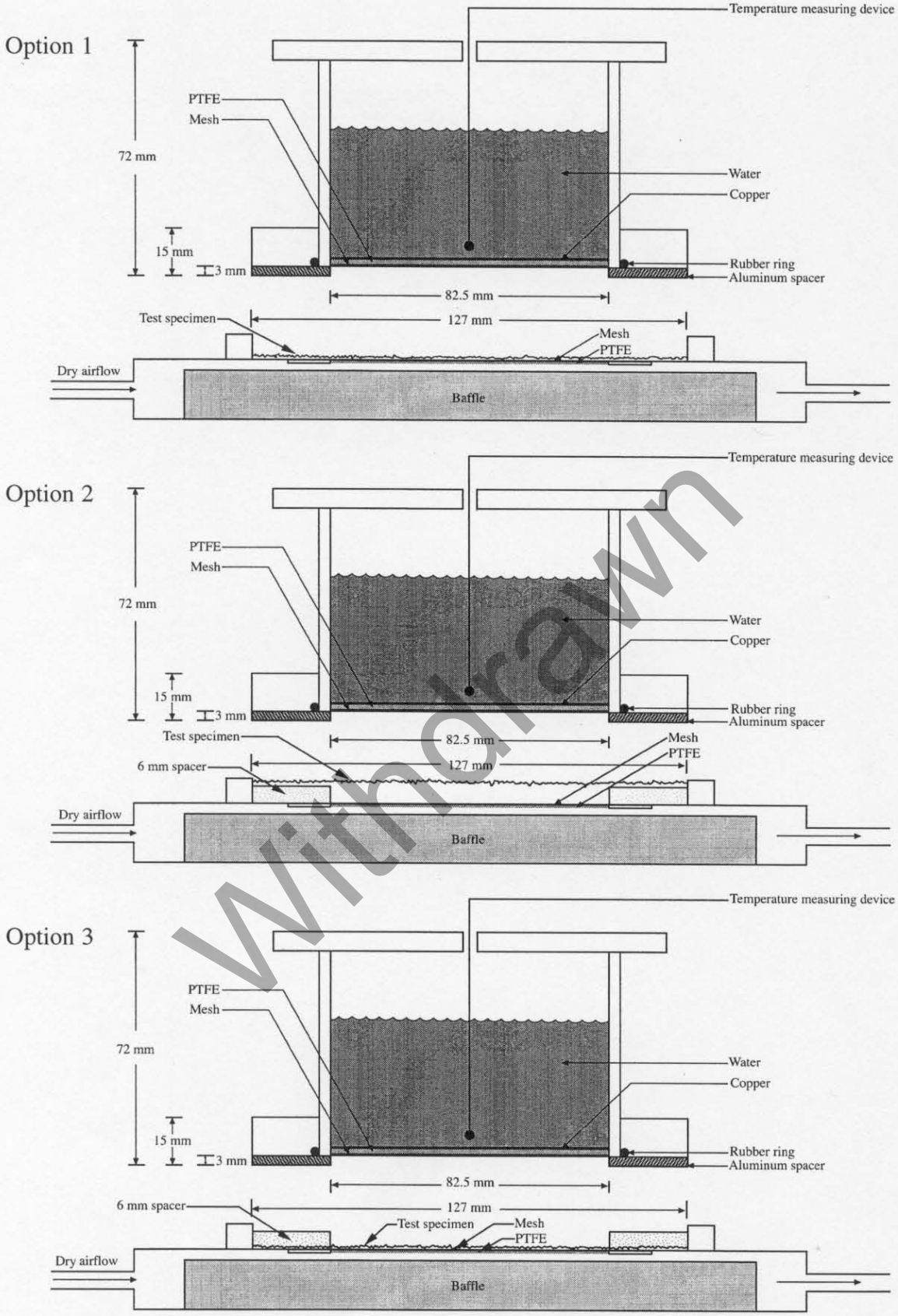

FIGURE 1

Details of the Water-Vapour Permeability Apparatus

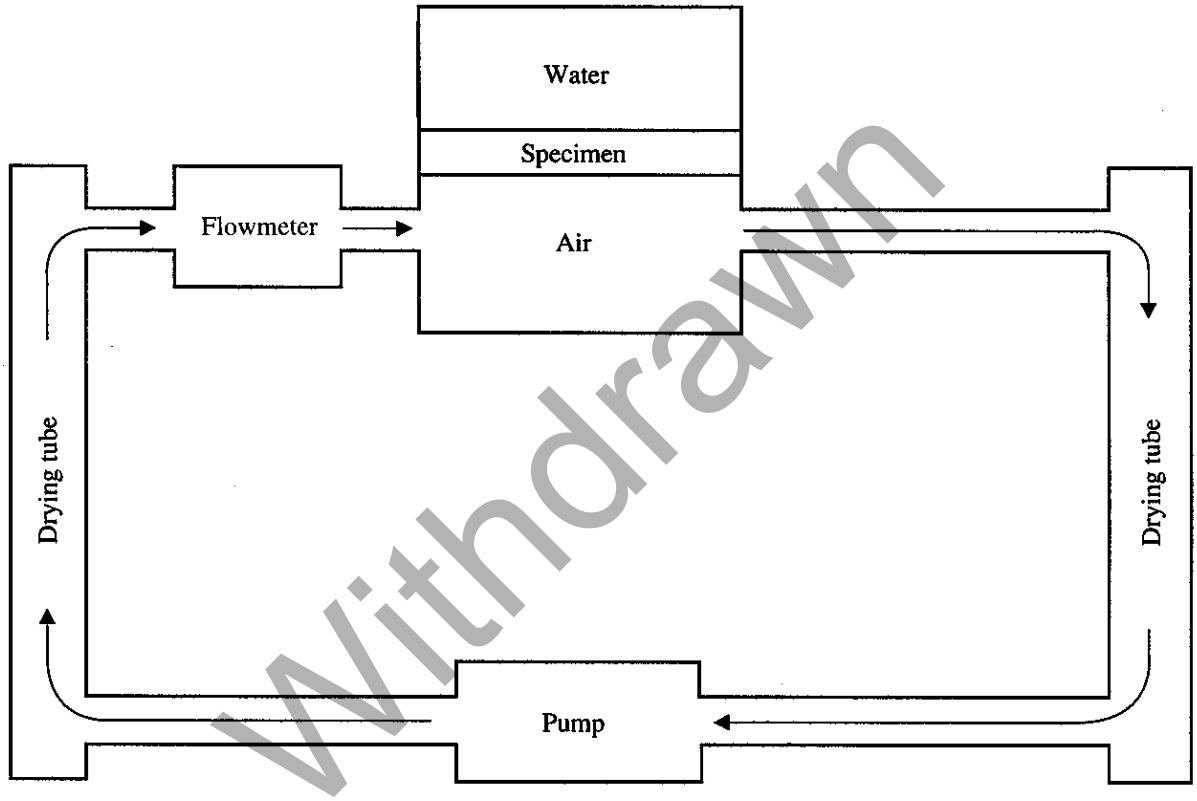

FIGURE 2A

Schematic Diagram of Apparatus

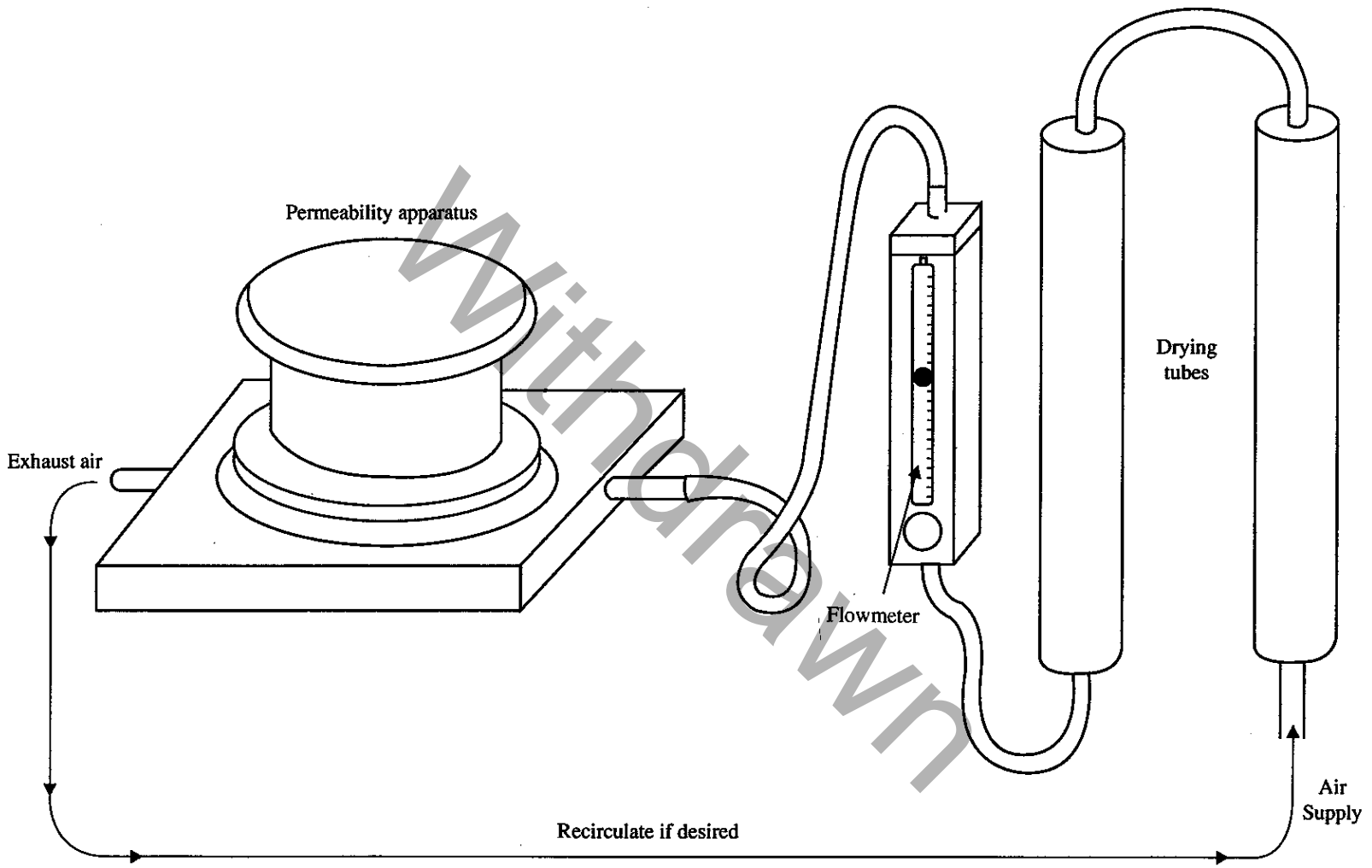

FIGURE 2B

Schematic Diagram of Equipment

(This appendix does not form a mandatory part of the method.)

A1. Factors Affecting Water Vapour Diffusion

The rate at which water diffuses through a sample is governed by:

a. the vapour pressure difference between the water surface and the external ambient conditions,

b. the temperature of the assembly,

c. the atmospheric air pressure,

d. the total thickness of air between the water surface and the region in the external ambient atmosphere in which uniform conditions exist,

e. the resistance of the test specimen,

f. the Relative Humidity of the test specimen.

A2. Test Options

Option 1 is recommended for, but not limited to, materials with microporous coating or lamination.

Option 2 is recommended for, but not limited to, materials with either a hydrophillic or microporous coating or lamination.

Option 3 is recommended for, but not limited to, materials with microporous coating or lamination.

Agreement should not be expected between results obtained by different options. The option selected should be the one which more nearly approaches the conditions of use, or by agreement.

A3. Related Publications

The following publications may also contain information to assist in the choice of the appropriate option:

(1) Osczevski, R.J, and Dolhan, P.A. "Anomalous Diffusion in a Water Vapour Permeable, Waterproof Coating," Journal of Coated Fabrics, Volume 18, April 1989.

(2) Farnworth, B., Lotens, W.A., Wittgen, P.P.M.M., "Variation of Water Vapor Resistance of Microporous and Hydrophillic Films with Relative Humidity," Textile Research Journal, Volume 60, No. 1, January 1990.