DESIGNING
FOR
DISASSEMBLY

By: Vince Catalli
by dEsign consultants

June 1998

CMHC Project Officer: Darrel R. Smith

This project was carried out with the assistance of a grant from Canada Mortgage and Housing Corporation under the terms of the External Research Program (CMHC File 6585-C089). The views expressed are those of the author and do not represent the official views of the Corporation.

PURPOSE

The intent of this research is to examine ways in which homes can be designed to facilitate future renovation and demolition, thereby reducing the generation of wastes. Through the examination of traditional construction and design, the purpose is to develop a set of principles and designs which fulfill the concept of designing for disassembly.

ACKNOWLEDGMENTS

We would like to acknowledge the following individuals who were advisors to the project. Without their support, interest, guidance and participation throughout the project, the research would not have been possible.

Steve Barkhouse - Amsted Construction Ltd.
John Broniek - Canadian Home Builders' Association
Bill Ritcey - Minto Developments Inc.
Len Shaw - Canadian Association of Recycling Industries
Darrel Smith - Canada Mortgage and Housing Corporation

In addition, we would like to thank the following individuals who helped out in various capacities during the project.

Elizabeth Arnold - City of Ottawa
Brent Barnes - Canadian Plastics Industry Association
Merlis Belcher - Weldon Concrete
Jim Bell - Technical Dimension Homes
Len Bolger - Adva Tech Homes
Brian Burns - Carleton University
Jim Calagoure - Osgoode Recycling Centre
Fred Edgecombe - Canadian Plastics Industry Association
Joe Hall - Regional Municipality of Ottawa-Carleton
Larry Hately - Algonquin College
John C. Haysom - National Research Council
Stephen Hensel - Architect
Andre Houde - Minto Developments Inc.
Richard Lee - Ottawa Carleton Home Builders' Association
Rick Minneau - Regional Municipality of Ottawa-Carleton
Toni Montenegrino - Ottawa Construction Association
Alex Munter - Regional Municipality of Ottawa-Carleton
Bernie Owens - Westroc Industries Ltd.
David Poupoire - Guildcrest Homes
Hedy Segal - Ottawa Construction News

EXECUTIVE SUMMARY

To fulfill the objectives of the research, examining the traditional methods of housing construction and developing practical principles of designing for disassembly, the research report is structured into the following four main body parts.

The first part of the report, chapters one through three, provides introductory context of the motivation for researching design principles which account for the eventuality of renovation and demolition. In addition to the introduction, a description of several project precedents is provided to explain the foundations upon which this research is based. The goal was to not repeat the experiences, but rather learn from them so that this research would take the evolution of flexible, adaptable housing a step further by examining ways in which housing design can consider disassembly to reduce wastes.

The second part of the report, chapters four through eight, analyses the methods of traditional housing construction by examining typical foundations, flooring, interior partitions, exterior walls, and roofing. The typical assemblies are closely examined to determine why certain portions of houses are renovated and what sources of waste are most commonly generated. By understanding the reasons for renovation and the obstacles to waste reduction, the findings were then used to figure out ways each typical assembly could be re-designed to serve the same function yet facilitate future disassembly.

Thirdly, in chapters nine and ten, the findings of the typical assembly analysis were organized to communicate the most common obstacles to effective disassembly and salvage of building materials. With a thorough understanding of the traditional sources of wastes, each building material was analysed to determine its specific reuse, recycling and landfill issues. This information proved useful when developing the basic principles of designing for disassembly. Understanding the waste reduction issues surrounding each building material and assembly allowed for the formulation of basic principles which directly address the issues discovered.

Fourthly, in chapters eleven through seventeen, the findings of the research were analysed to develop basic principles of designing for disassembly. For clarity, the principles are grouped into the broad categories of a home's construction which currently pose the most significant obstacles to less wasteful renovation and demolition: foundation, framing and sheathing, interior finish, thermal and moisture protection, and exterior finish.

In addition to a design which we created based on the principles, a student design competition was held to solicit further innovative ideas. To gain feedback from the industry and the public an exhibit was organized at which information regarding the research, our design, the student competition entries, and two products (which lend themselves to the principles) were displayed. People attending were encouraged to complete questionnaires which we used to assess the level of acceptance of the concepts of the research, the new designs and two building products.

To test the viability of the design principles, the National Research Council was approached to provide input of how the designs and proposed principles would be affected by the National Building Code. To further test the viability of the research findings, three members of the industry were approached to gain input regarding the economic viability of designing for disassembly.

Finally, recommendations are provided in the last chapter (eighteen) which reflect certain issues encountered throughout the research. The appendices serve to provide further information and supporting materials surrounding various topics within the report.

RÉSUMÉ

Pour atteindre les objectifs de la recherche, à savoir examiner les méthodes traditionnelles de construction d'habitation et établir des principes pratiques pour prévoir le désassemblage, ce rapport de recherche a été divisé en quatre grandes sections.

La première section, soit les chapitres un à trois, présente le contexte qui a mené à la recherche de principes de conception tenant compte de la rénovation et de la démolition éventuelles d'un bâtiment. Outre l'introduction, on décrit plusieurs ouvrages antérieurs afin d'expliquer les fondements de cette recherche. Les chercheurs n'avaient pas l'intention de répéter ces expériences, mais plutôt d'en tirer des leçons afin que cette nouvelle recherche pousse un peu plus loin l'évolution des maisons flexibles et adaptables en examinant des façons dont les habitations pourraient être conçues de manière à tenir compte d'un désassemblage futur permettant de réduire la quantité de déchets produits.

Le deuxième section du rapport, composée des chapitres quatre à huit, analyse les méthodes traditionnelles de construction d'habitation en examinant les façons usuelles de mettre en oeuvre les fondations, les revêtements de sols, les cloisons intérieures, les murs extérieurs et la toiture. Les assemblages courants sont scrutés à la loupe afin de savoir pourquoi certaines parties d'une maison sont rénovées et quels déchets sont le plus souvent produits. Lorsqu'on a pu comprendre les facteurs qui motivent la rénovation et les éléments qui font obstacle à la réduction des déchets, on a été en mesure d'étudier comment la conception de chacun des assemblages courants pouvait être revue afin de faciliter leur désassemblage futur, tout en réalisant les mêmes objectifs.

Aux chapitres neuf et dix, constituant la section trois, les résultats de l'analyse des assemblages courants ont été organisés de façon à communiquer les obstacles les plus fréquents qui s'opposent à un désassemblage efficace et à la préservation des matériaux de construction. Forts d'une excellente compréhension de la manière dont les déchets sont habituellement produits, les chercheurs ont été à même d'analyser chaque matériau de construction dans le but de déterminer exactement les problèmes inhérents à leur réutilisation, à leur recyclage et à leur mise en décharge. Cette information s'est avérée utile quand le moment est venu de mettre au point les principes de base d'une conception tenant compte du désassemblage. Le fait de comprendre les problèmes de réduction des déchets propres à chaque matériau et assemblage a permis de formuler des principes de base qui s'attaquent directement aux difficultés soulevées.

À la section quatre, à savoir les chapitres onze à dix-sept, on a analysé les résultats de la recherche afin d'élaborer les principes de base d'une conception tenant compte du désassemblage. Pour plus de clarté, on a regroupé les principes selon les catégories de construction résidentielle qui créent actuellement les plus gros obstacles à la réduction des déchets dans un contexte de rénovation et de démolition : fondations, ossature et revêtement intermédiaire, finition intérieure, isolation thermique et protection contre l'humidité, finition extérieure.

En plus de la conception que les chercheurs ont réalisée à partir des principes établis, on a organisé un concours de conception destiné aux étudiants afin de susciter des idées encore plus novatrices. Afin d'obtenir les réactions du public et de l'industrie, on a monté une exposition qui a

permis de donner de l'information sur la recherche effectuée, le concept mis au point, les propositions des étudiants ainsi que deux produits (qui respectaient les principes établis). Les visiteurs ont été invités à remplir un questionnaire que les chercheurs ont utilisé pour évaluer dans quelle mesure les principes de la recherche, les nouveaux concepts et les deux produits de bâtiment étaient acceptés.

Pour mettre à l'essai la viabilité des principes de conception, on a demandé au Conseil national de recherches d'indiquer quelles répercussions les concepts et les principes proposés pourraient avoir sur le Code national du bâtiment. On a aussi voulu éprouver la viabilité des résultats de la recherche. C'est ainsi qu'on a demandé à trois membres de l'industrie de donner leur avis sur la viabilité économique d'une conception tenant compte du désassemblage.

Enfin, le dernier chapitre (dix-huit) formule des recommandations qui prennent en considération certains problèmes que les chercheurs ont constatés tout au long de la recherche. Les annexes renferment de plus amples renseignements et proposent du matériel de référence sur les divers sujets abordés dans le rapport.

CMHC SCHL

Helping to house Canadians

Question habitation, comptez sur nous

National Office

Bureau national

700 Montreal Road
Ottawa, Ontario
K1A 0P7

700 chemin de Montréal
Ottawa (Ontario)
K1A 0P7

Puisqu'on prévoit une demande restreinte pour ce document de recherche, seul le sommaire a été traduit.

La SCHL fera traduire le document si la demande le justifie.

Pour nous aider à déterminer si la demande justifie que ce rapport soit traduit en français, veuillez remplir la partie ci-dessous et la retourner à l'adresse suivante :

Le Centre canadien de documentation sur l'habitation
La Société canadienne d'hypothèques et de logement
700, chemin de Montréal, bureau C1-200
Ottawa (Ontario)
K1A 0P7

TITRE DU RAPPORT : _____

_____

Je préférerais que ce rapport soit disponible en français.

NOM _____

ADRESSE _____
rue app.

_____
ville province code postal

No de télephone ( ) _____

TEL: (613) 748-2000

Canada Mortgage and Housing Corporation Société canadienne d'hypothèques et de logement

Canada

TABLE OF CONTENTS

1 INTRODUCTION 1

2 MAINTAINING A MANAGEABLE SCOPE 3

3 PRECEDENTS 4
3.1 The Grow Home 4
3.2 The Next Home 5
3.3 Sprout 5
3.4 FlexHousing 6
3.5 Kilborn Housing Deconstruction 7

4 FOUNDATION 8
4.1 Typical Assembly 8
4.2 Reasons for Renovating 8
4.2.1 Leaks 9
4.2.2 Structural Damage 9
4.2.3 Alter Basement Framing 9
4.2.4 Extend to Support an Addition 9

5 FLOORING 11
5.1 Typical Assembly 11
5.2 Reasons for Renovating 11
5.2.1 Squeaks 11
5.2.2 Replace Finished Floor 12
5.2.3 Extend as Part of an Addition 12

6 INTERIOR PARTITIONS 13
6.1 Typical Assembly 13
6.2 Reasons for Renovating 13
6.2.1 Remove to Combine Spaces 13
6.2.2 Relocate to Alter Floor Layout 13
6.2.3 Add to Create New Living Space 14

7 EXTERIOR WALLS 15
7.1 Typical Assembly 15
7.2 Reasons for Renovating 15
7.2.1 Expansion/Addition 15
7.2.2 Replace or Repair Exterior Finish 16

8 ROOFING 17
8.1 Typical Assembly 17

8.2 Reasons for Renovating 17
8.2.1 Minor Alterations 17
8.2.2 Replace Roof Finish 17
8.2.3 Extend as Part of an Addition 18

9 OBSTACLES TO DISASSEMBLY 19
9.1 Foundation 19
9.2 Framing & Sheathing 19
9.3 Interior Finish 19
9.4 Thermal & Moisture Protection 19
9.5 Exterior Finish 19

10 WASTE & DIVERSION ISSUES 20
10.1 Concrete 20
10.2 Brick 20
10.3 Dimensional Lumber 20
10.4 Plywood and Particleboard 21
10.5 Drywall 21
10.6 Polyethylene Vapour Barrier 22
10.7 Vinyl Flooring 22
10.8 Asphalt Shingles 22
10.9 Batt Insulation 22

11 BASIC PRINCIPLES OF DESIGNING FOR DISASSEMBLY 23
11.1 General 23
11.2 Foundation 23
11.3 Framing & Sheathing 24
11.4 Interior Finish 24
11.5 Thermal & Moisture Protection 25
11.6 Exterior Finish 25
11.7 Applying the Basic Principles 26

12 BUILDING CODE IMPLICATIONS 30
12.1 Reuse of Materials 30
12.2 Material Assemblies 31

13 STUDENT DESIGN COMPETITION 32

14 THE EXHIBIT 34

15 INDUSTRY ACCEPTANCE 35

16 MARKET ACCEPTANCE 38

17 ECONOMIC VIABILITY 40

18 CONCLUSIONS AND RECOMMENDATIONS 41

REFERENCES 43

END NOTES 46

APPENDIX A: LIST OF EXTERNAL SOURCES A-1

APPENDIX B: BUILDING CODE DOCUMENTS B-1

APPENDIX C: STUDENT DESIGN COMPETITION INFORMATION C-1

APPENDIX D: EXHIBIT INFORMATION D-1

LIST OF FIGURES

FIGURE 1 8
Typical Foundation Assembly[1]

FIGURE 2 11
Typical Flooring Assembly[2]

FIGURE 3 13
Typical Interior Partition Assembly[3]

FIGURE 4 15
Typical Exterior Wall Assembly[4]

FIGURE 5 17
Typical Roof Assembly[5]

FIGURE 6 26
Typical Design[6]

FIGURE 7 27
Modified Design

FIGURE 8 28
Modified Floor and Wall Detail

FIGURE 9 29
Modified Post and Beam Detail

FIGURE 10 29
Modified Exterior Finish Detail

CHAPTER 1 - INTRODUCTION

Recent trends in certain regions indicate that housing renovation and demolition are rising, while new construction is in some cases falling. Need for home office space, the fact that children are remaining at home longer and the elderly becoming a part of the extended family are all requiring additional floor space. An unstable economy, in which fluctuating interest rates and job insecurity are prevalent, is contributing to homeowners choosing to renovate rather than buy new.

Excluding last year (1997) which saw a rise in the value of building permits for the first time since 1993, statistics gathered from the City of Ottawa indicate that the value of building permits fell from $178 Million in 1994 to $85 Million in 1996. However, statistics indicate that the value of demolition permits has more than doubled in the last 2 years - jumping from $625,000 in 1995 to $1.5 million in 1997. Similarly, figures indicate that since 1993 the value of renovation permits has been greater than that of building permits.[7] This situation is likely typical of the national picture in which the decline of new construction has been counter-balanced by an increase in renovation and demolition.

The motivation for this research is a result of a 6,000 square foot housing deconstruction (the systematic dismantling of a structure to salvage as many materials as possible) project our firm managed in Ottawa in the summer of 1996. Through the support of several industry sponsors and the commitment of the contractor, the project succeeded in diverting 90% of the salvaged building materials from landfill, generating roughly $10,000 from the sale of material.[8] Upon encountering countless obstacles to effective deconstruction, it was felt that disassembly should be a consideration at the beginning of a home's lifecycle (during design) rather than simply in the middle (renovation) or at the end of its lifecycle (during demolition).

The intent of this research is to examine ways in which homes can be designed to facilitate future renovation, thereby reducing the generation of wastes. Although the principles of deconstruction are gaining popularity by demonstrating that used building materials can be reused or recycled, its practice and cost-effectiveness is viewed largely with skepticism.[9] The labour intensity of salvaging used building materials is primarily due to the way in which homes have traditionally been constructed. Essentially, traditional design and construction give no consideration to the eventuality of renovation. As a result assemblies, components and building systems are joined, fastened and connected in a manner which makes disassembly difficult and wasteful.

The research is aimed at small to mid-size homes (900 to 1,800 square feet) single family dwelling units situated on standard urban and suburban sized lots. The report analyzes typical foundation, floor, interior partition, exterior wall, and roof assemblies to determine the obstacles to disassembly which currently exist. Examining the obstacles helped direct the research towards analyzing ways in which each of the assemblies could be re-designed to serve the same purposes and maintain their structural and aesthetic integrity but facilitate future disassembly to accommodate less wasteful renovation and deconstruction. The heart of the research lies in determining better ways to connect materials and building components. Effort was concentrated

in researching available products and technologies which lend themselves well to future renovation and deconstruction.

To test the viability of the research, the new design principles were scrutinized on the basis of cost-effectiveness (conceptually comparing the principles to traditional construction methods), industry acceptance (designers, contractors and tradespeople were surveyed to gain feedback), and public acceptance (potential home buyers and home owners were also surveyed to gain feedback).

To solicit innovative and practical design ideas, a student competition was held at Carleton University, Algonquin College and La Cite Collegiale, situated in Ottawa. Architecture and design students were briefed on the objectives of the research and challenged to develop designs which demonstrate the principles of less wasteful renovation and deconstruction. The winning designs and honourable mentions were then displayed at an exhibit from May 21 to May 24, 1998 at the Regional Municipality of Ottawa-Carleton headquarters to which design industry professionals, home builders, local media, and the public were invited.

In addition to the student designs, the research context and objectives were communicated through displays and a brochure which we created. To demonstrate practical application of the new designs, innovative products (which lend themselves to the principles of designing for disassembly) were also displayed. The exhibit provided us with the opportunity to gain feedback from the industry and the public about the new design principles' practicality and level of acceptance through the use of questionnaires.

CHAPTER 2 - MAINTAINING A MANAGEABLE SCOPE

During the research it was discovered that there are several issues which closely relate to the principles of designing for disassembly but which would require more diligent attention than could be provided within the scope of this report. To maintain focus on the intentions of the research, these issues were not given the analysis which they would perhaps otherwise deserve. To draw attention to an important few, the following are brief descriptions of the issues which warrant specific mention.

The basis of the research of new design principles is improving waste reduction. Although other environmental considerations such as embodied energy, recycled content of materials, material lifecycle, and indoor air quality are all equally important measures, it was felt that exploration into each of these considerations would potentially compromise the specific intentions and focus of the research. For a list of external sources of information relating to environmental considerations not addressed in this report please refer to Appendix A.

To properly reflect the realities of the marketplace, the relation of the research to bathroom and kitchen renovations (the two most commonly renovated rooms) requires explanation. Detailed analysis of the specifics of kitchen and bathroom renovation has the potential to be an entire research project in and of itself. Having acknowledged this, it is felt that the analysis of each of the major assemblies is equally applicable to all parts of a home. Each of the subsequent chapters should be kept in a context which includes the two most common forms of renovation. Although analysis is focused mainly on the components of material assemblies, the principles of new design are ones which also apply to more individualized components such as kitchen cabinets, plumbing fixtures, and vanities.

Although plumbing, heating and electrical services form an important part of most major home renovations, they have not been addressed.

CHAPTER 3 - PRECEDENTS

The principles of this research are rooted in several precedent projects which demonstrate the affordability and applicability of designing with future expansion in mind. The difference this report presents is that the design principles being proposed are on a smaller scale. Attention is afforded to the specifics of material assemblies, product selection and connection details. Precedent projects have focused mainly on conceptual alternatives which would afford the possibility of future expansion. Distinction also lies in the fact that this research places heavy emphasis on developing designs which, through waste reduction, make significant contribution to environmental responsibility.

The following is a brief description of four precedent projects and how they compare in terms of design detail and environmental consideration.

3.1 THE GROW HOME[10]

The Grow Home was developed in response to the need for affordable housing by first time home buyers. The methods for achieving this was through reducing the overall size and frontage of the housing unit along with simplifying its design.

By incorporating the following seven principles, the Grow Home's creators were able to produce units for approximately $40,000: narrow-front rowhouse (14 feet), small house (1,000 square feet), unpartitioned space, do-it-yourself components, traditional appearance, cost-effective materials, and prefabrication.

Although the Grow Home played a valuable role in demonstrating that reducing overall unit size and frontage as well as simplifying design can significantly reduce costs, it had certain expansion limitations. Although its name implies that the unit has the ability to grow, its design is such that expansion is limited to finishing the basement (if the home is not slab on grade).

From an environmental standpoint, there were no considerations built into the original design. However, a recent study by the CMHC and McGill University examined how the Grow Home can be made more environmentally responsible by incorporating building practices aimed at reducing waste.

For additional information contact:
Canada Mortgage and Housing Corporation
1-800-668-2642
Internet: www.cmhc-schl.gc.ca

3.2 THE NEXT HOME[11]

A creation of the Affordable Homes program at McGill University's School of Architecture, the Next Home was a response to the fundamental changes that have taken place in recent years which have raised the need for a new housing alternative. The motivating factors behind its design were: demographic shifts, economic restructuring, environmental concerns, lifestyle dynamics, and technological developments.

Using the basic module of multi-level living space, units are stacked on top of each other to create a free-standing single-family home linked through staircases. Depending on budget and the number of occupants, potential homeowners buy as many 750 square foot floor units as they want for approximately $50,000 each, including land.

Although the design allowed for a certain amount of flexibility with interior partitions, the only expansion opportunity involved the inclusion of another entire unit level (750 square feet). Staircases were designed in such a way to allow for the relatively easy transformation of the building into more or less households. Because the Next Home was designed to be situated on small urban lots there were no provisions made for expansion outwards or restructuring of the building's original footprint.

From an environmental standpoint, designers of the Next Home addressed the issue by stating that careful attention was paid to the selection of materials which are less harmful to the environment and indoor air quality, and that provide energy efficiency and lower operating and maintenance costs.

For additional information contact:
Affordable Homes Program
School of Architecture
McGill University
815 Sherbrooke Street West
Montreal, Quebec
H3A 2K6
Internet: www.mcgill.ca/homes
E-Mail: avifriedman@urbarc.lan.mcgill.ca

3.3 SPROUT[12]

The Sprout House was a product of an External Research Study done by Sevag Pogharian Design in 1994 for the CMHC. Aimed also at first time home buyers, the basic Sprout House is a small four-level structure with conventional wood frame construction and an unfinished basement and attic which are serviced with electricity and plumbing for future use. The design based itself on five principles: flexibility, incrementalism, participation, non-disruption, and anticipation of change.

Sprout's strength and relevance to this report lies in the fact that its potential to grow and change are designed into the house from the beginning. For example, its main entrance can accommodate a second entrance directly into an accessory apartment, trusses are designed to allow for an habitable attic, and exterior openings are coordinated with future additions.

Within the 1994 research report the home's designers provide extensive floor plan and conceptual building cross sections to describe a variety of expansion options for each housing scenario (i.e. 1½ and 2 storey split level semi-detached, 1½ and 2 storey townhouse etc.) The result is a starter home ranging in price from $80,000 to $115,000.

The report provides valuable costing and conceptual floor plan layouts. What it lacks from a practical standpoint, however, is detail about how to actually design for the expansion potential the Sprout House possesses.

Environmentally, the Sprout House design does not include mention of the environmental benefits of designing for growth other than to say that it is an environmentally sound approach to expanding the housing stock due to the fact that more units can be built per hectare than conventional single-family detached.

For additional information contact:
Canada Mortgage and Housing Corporation
1-800-668-2642
Internet: www.cmhc-schl.gc.ca

3.4 FLEXHOUSING[13]

Developed by CMHC, FlexHousing is a flexible, innovative approach to housing that promotes the design of homes with future lifestyles in mind. The concept was developed to stimulate thought on the part of designers, home builders and home owners of what long term requirements may be before building or renovating. A FlexHousing design should anticipate the changing needs of occupants, through the creation of an adaptable, accessible and affordable home.

To stimulate a market for this concept the CMHC developed a design competition in 1996 which challenged builders to create homes which can grow, shrink, and adapt in many different ways as their occupants' lifestyles change.

Features of the winning designs included such things as: adjustable heights for kitchen and bathroom cabinets and counters; apartments and garages wired for home-office conversion; reinforced stairwells to allow for the installation of chair lifts; and moveable wall-frame panels to allow for greater flexibility. Price for the winning designs ranged from $80,000 to $150,000 depending on the size of the unit.

Each design was innovative in its adaptability (to convert the use of certain spaces) and

accessibility (barrier-free design). Several of the designs also give details involved in actually designing assemblies to easily accommodate each home's adaptability.

Environmentally, several of the designs addressed Healthy Housing issues such as: materials with low-emissions, energy efficient windows, rain water cisterns, and building materials from recycled and waste materials.

For additional information contact:
Canada Mortgage and Housing Corporation
1-800-668-2642
Internet: www.cmhc-schl.gc.ca

3.5 KILBORN HOUSING DECONSTRUCTION[14]

In cooperation with CMHC, Tamarack Developments Corporation, BFI Waste Systems, Goode-X Equipment Ltd., Eco-Mat Inc., and the Regional Municipality of Ottawa Carleton, we managed a 6,600 ft^2 housing deconstruction project on Kilborn Avenue in Ottawa in 1996. The intent of the project was to salvage and reuse and/or recycle as close to 100% as possible of the building materials. Through planning and a commitment to careful dismantling, most of the wastes typically generated during demolition were diverted from landfill.

The project demonstrated that deconstruction can have positive environmental and economic benefits. Revenues from the salvaged materials totaled approximately $10,000 and only 8 bins of waste were sent to landfill (versus an estimated 33 bins for a conventional demolition of this size). All in all roughly 90% of the building materials were marketed for reuse or recycling.

Although the waste reduction efforts were extremely successful, our experience on the project indicated that traditional construction makes disassembly difficult and wasteful. Only through careful, time-consuming and labour-intensive dismantling techniques were materials salvaged in condition suitable for reuse.

Throughout the course of the project we began to speculate about the waste reduction possibilities if the home had been designed in a manner which took into account the fact that the home would one day be demolished. The genesis of that initial speculation is this research project, which has enabled us to begin to explore the concept of designing for disassembly.

For additional information contact:
by dEsign consultants
141 Holland Avenue
Ottawa, Ontario
K1Y 0Y2
(613) 759-4605

CHAPTER 4 - FOUNDATION

4.1 TYPICAL ASSEMBLY

Figure 1:
Typical Foundation Assembly

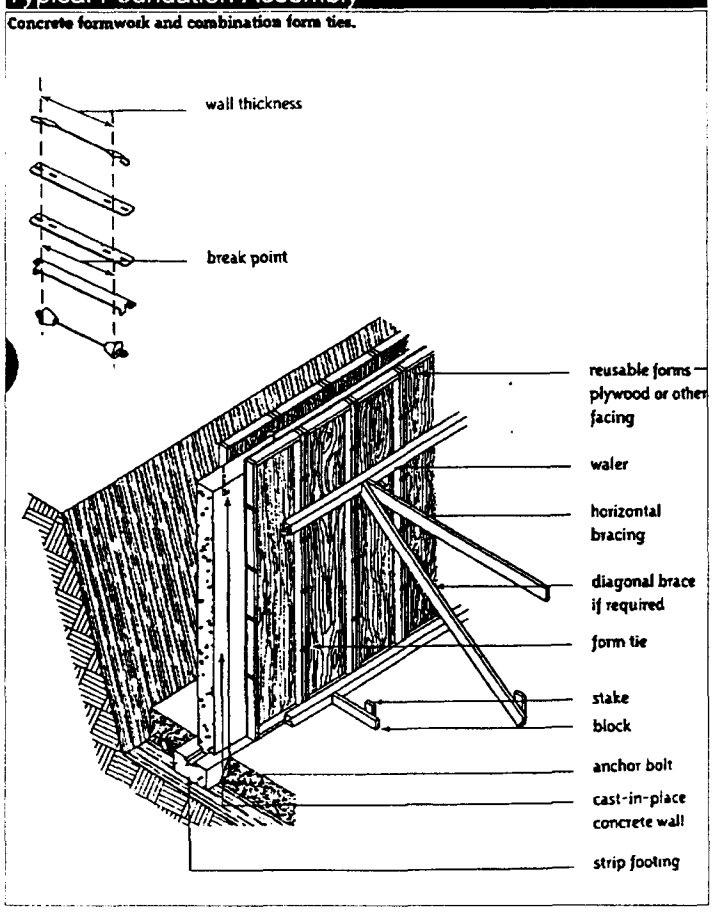

Cast-in-place concrete is the most common form of residential foundation. Depending on the number of stories of the house, presence of lateral wall support, the foundation's depth below grade, and exterior finish materials, wall thickness generally varies from 150 to 300 mm (6 to 12 inches).[15] Foundation walls are typically formed using plywood sheathing, steel form ties and dimensional lumber bracing. The plywood is coated with form oil to facilitate removal after the concrete has sufficiently cured. Foundation walls are typically dampproofed with a coat of bituminous material and in some cases, also a drainage layer which extends from the top of the footings to the finished grade.[16]

Although the non-structural basement framing is not normally considered part of the foundation wall, to provide a representation of the most common complete foundation wall system, its typical assembly will be considered to be a part of the foundation within this report. Also important is the fact that any renovation of the concrete foundation wall will impact directly on the basement wall.

For the purposes of this report, reference to *foundation walls* implies the concrete assembly and reference to the *basement walls* implies the interior wood framed assembly.

4.2 REASONS FOR RENOVATING

The following is a description of four typical foundation renovation scenarios. Within each there is a description of their common causes and solutions, potential waste sources and connection considerations.

4.2.1 LEAKS

Leaks generally occur through small cracks caused by concrete shrinkage or larger cracks which commonly results from repeated freeze-thaw cycles (thermal stress). To repair leaking foundations the source of the leak is generally patched from the inside or from the outside. If the leak is patched from the inside, waste may be generated due to damage done to the basement wall. If earth is excavated to patch the leak on the foundation wall's exterior, grout and bituminous material is applied directly to the crack. Depending on the extent of the problem, bituminous material or the drainage layer may need to be re-applied throughout the entire wall. Waste will be generated if old drainage layer is removed and replaced. Connections to consider include: the basement finish to framing; vapour barrier to framing and acoustical vapour barrier joint sealant; and the dampproofing and drainage layer to foundation wall.

4.2.2 STRUCTURAL DAMAGE

Although rare, structural damage is generally due to improper mix design, improper placement or insufficient curing measures. Structural repair may require portions of, or the entire foundation to be removed and re-poured. Waste will result from damage done to framing, finish, attached decks and mechanical and electrical materials during separation of the house from its foundation. Similarly, basement walls will need to be removed which will potentially result in waste. If a drainage layer has been used, it is also a potential source of waste. The greatest source of potential waste will result from the removal of the concrete. Connections to consider include: foundation wall to footing; foundation wall to floor framing; basement framing to the underside of floor and slab; basement finish to framing; vapour barrier to framing and acoustical vapour barrier sealant; interior partition to floor framing; stairs to the first floor and basement slab; window connections; decks and steps to foundation wall; and mechanical and electrical runs between the basement and first floor.

4.2.3 ALTER BASEMENT WALL FRAMING

Renovation involving the alteration of the basement's framing is generally done for aesthetic reasons or to improve thermal and moisture protection. This will involve placing or changing the wall's finish material, insulation or vapour barrier. Each material is a potential source of waste. Connections to consider include: the finish material to framing; vapour barrier to framing; and acoustical vapour barrier sealant.

4.2.4 EXTEND TO SUPPORT AN ADDITION

Extending the foundation to support an addition typically involves either removing a portion of the existing foundation wall to extend the basement space or simply fastening the new foundation walls to the existing without extending the basement space. Removing a portion of the foundation wall to extend the basement results in concrete and potentially framing, finish, insulation, and vapour barrier waste. Connection considerations include: new foundation wall to

existing foundation wall; new and existing foundation walls to new and existing floor framing; new and existing basement wall framing to the underside of floor and slab; finish to framing; and vapour barrier to framing and acoustical vapour barrier sealant.

CHAPTER 5 - FLOORING

5.1 TYPICAL ASSEMBLY

A typical floor assembly consists of dimensional lumber framing (38 x 184 (2 x 8), 38 x 235 (2 x 10) etc.) at 400 or 600 mm (16 or 24 inch) centers, blocking, strapping and/or bridging, plywood subfloor, particleboard underlay and a finished flooring material (vinyl sheet flooring, linoleum, hardwood, carpet, ceramic etc.).[17] For the purposes of this report the finished ceiling of the living space below will be considered to be a part of the floor's assembly. Although not always part of the assembly (if the basement is not finished) it is important to consider because any renovation of the floor assembly will likely impact on the ceiling below.

Figure 2: Typical Flooring Assembly

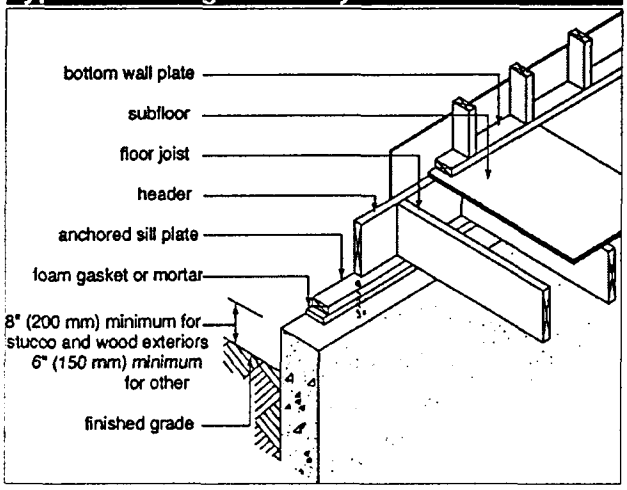

Though not analyzed here, one should also be conscious of the fact that floor cavities are traditionally used to run plumbing, ducting and electrical wiring. Certain floor renovations will affect these runs.

5.2 REASONS FOR RENOVATING

The following is a description of three common renovation scenarios. Within each is an outline of causes, solutions, potential sources of waste, and connection considerations.

5.2.1 SQUEAKS

A squeaking floor is normally the result of the subfloor separating from the wood floor joists. The cause is shrinking or warping lumber due to low levels of humidity during winter months, or insufficient gluing or nailing or screwing of the subfloor during installation. Repair generally involves removing sections of the finished flooring and underlay to expose the subfloor. Additional nails or screws are then added to the area identified as the source of the problem. Extreme cases may necessitate replacing portions of the subfloor and floor framing. Potential sources of waste during renovation include finished flooring (traditionally carpet, linoleum, vinyl, ceramic, or hardwood), adhesive or grout, carpet strips and underpad, underlay, subfloor, and floor joists. Connections to consider include finished flooring to underlay, underlay to subfloor, and subfloor to floor joists.

5.2.2 REPLACE FINISHED FLOORING

Finished flooring is generally replaced at the end of its useful life, if it has been damaged, or if aesthetic change is desired. Replacing finished flooring involves temporarily removing the baseboard trim and lifting the flooring and underlay. Replacement typically requires the installation of new underlay (when the finished flooring is glued) and in some cases new baseboard trim. Potential sources of waste include existing finished flooring and underlay, adhesive or grout, underlay, baseboard trim, and off-cuts from the new underlay and finished flooring. Connections to consider include: baseboard trim to walls, new and existing finished flooring to underlay, and new and existing underlay to subfloor.

5.2.3 EXTEND AS PART OF AN ADDITION

Extending a floor as part of an addition is the most complex renovation scenario. If the addition does not include a heated crawl space or basement, the new floor assembly will include insulation and vapour barrier. If the existing exterior wall is entirely removed the new floor must match and join the existing floor. Potential sources of waste include: new and existing finished floor and underlay, existing basement wall, and new subfloor, floor joists, insulation and vapour barrier off-cuts. Connections to consider include: new finished flooring to existing finished flooring; new floor framing to existing floor framing; existing wall to existing flooring; new floor framing to new foundation system; and exterior siding and sheathing to new floor framing.

CHAPTER 6 - INTERIOR PARTITIONS

6.1 TYPICAL ASSEMBLY

For the purposes of this report only non-loadbearing partitions will be examined. Although renovation of loadbearing interior walls is more complex due to the structural considerations, it was felt that interior wall renovation most commonly involves the removal or relocation of non-loadbearing partitions. Similarly, small and mid-size homes, to which this report is addressed, are often constructed such that floor joist and roof truss spans bear entirely on beams and exterior walls.[18]

Figure 3:
Typical Interior Partition Asembly

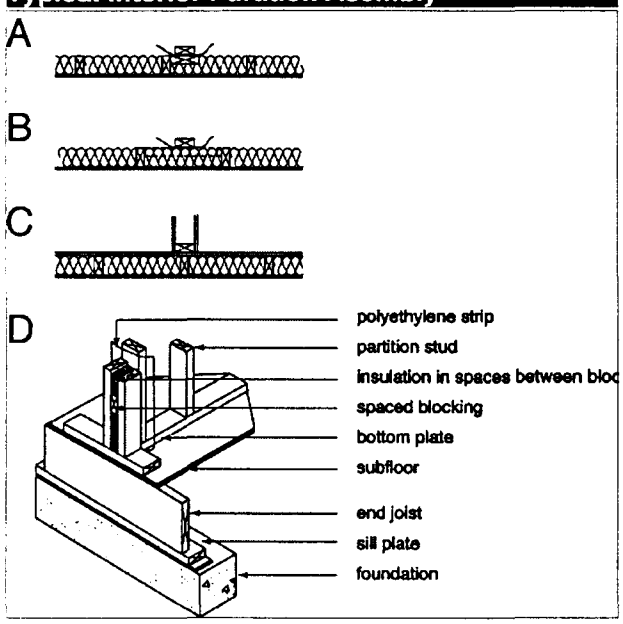

Large plumbing stacks and ducting are most often concentrated in 38 x 140 (2 x 6) walls. Interior walls, generally constructed of 38 x 89 studs (2 x 4), often possess smaller plumbing, ductwork and electrical wiring. Though not analyzed, these services are a consideration when renovating.

6.2 REASONS FOR RENOVATING

The following is a description of three common renovation scenarios. Within each is an outline of causes, solutions, potential sources of waste, and connection considerations.

6.2.1 REMOVE TO COMBINE SPACES

Interior partitions are commonly removed to combine two or more rooms to create a larger living space. Potential sources of waste include: wood framing; wall finish (typically drywall); tape and plaster; baseboard trim; and existing flooring, adjoining wall and ceiling finish. Connections to consider include: baseboard trim to wall framing; wall finish to framing; taped and plastered joints; and wall framing to floor, ceiling, and adjoining walls.

6.2.2 RELOCATE TO ALTER FLOOR LAYOUT

To alter a home's floor layout, interior walls are often relocated. The desire may be to partition a room differently or increase the size of one room versus another. Potential sources of waste and connection considerations are identical to those stated above.

6.2.3 ADD TO CREATE NEW LIVING SPACE

An interior wall may be added to partition existing floor space differently or as part of a new room (i.e. bathroom, kitchen, closet etc.). Potential sources of waste and connection considerations are also identical to those stated above.

CHAPTER 7 - EXTERIOR WALLS

Exterior wall construction is for the most part, typically 38 x 89 (2 x 4) or 38 x 140 (2 x 6) wood framed. There are, however, several popular exterior finish materials which are currently being used. Vinyl siding and stucco are common, relatively affordable options due in large part to their ease of installation.

Figure 4:
Typical Exterior Wall Assembly

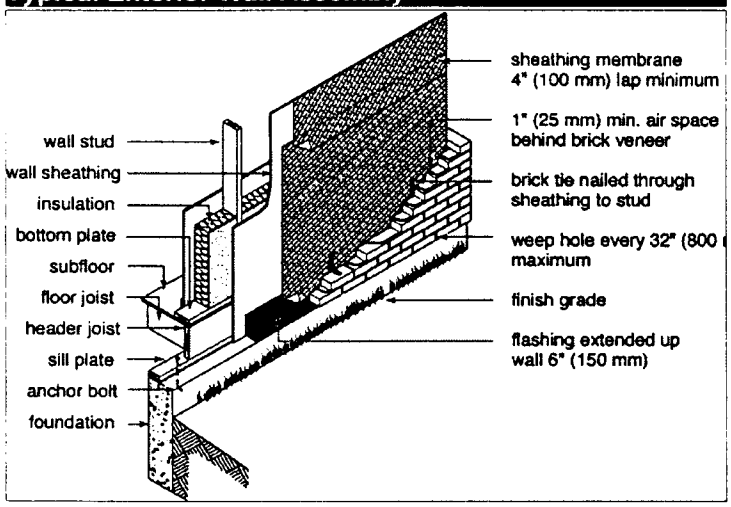

Although not analyzed here, careful attention should be paid to the presence of electrical wiring, switches and outlets during renovation to minimize damage, relocation and removal which add to the complexity and cost.

7.1 TYPICAL ASSEMBLY

For the purposes of this report an assembly which includes brick veneer will be considered typical. As a finish material brick has traditionally been somewhat more expensive, and used primarily for aesthetic purposes on wall faces exposed to the street. However, the competitive housing market has, in recent years, made brick a more affordable option.

7.2 REASONS FOR RENOVATING

The following is a description of two common renovation scenarios. Within each is an outline of causes, solutions, potential sources of waste, and connection considerations.

7.2.1 EXPANSION/ADDITION

Small to mid-size home owners often find it necessary to expand by constructing an addition onto the rear or side of their homes. Expanding typically involves demolishing an exterior wall to accommodate the addition of livable space on the ground floor. Potential sources of waste include: wood wall framing, interior wall finish, exterior wall finish, baseboard trim, insulation, vapour barrier, exterior sheathing, building paper, acoustical vapour barrier sealant, windows, and doors. Connections to consider are identical for the existing wall being demolished and the new exterior wall(s) being constructed, and include: wall framing to floor and ceiling framing; interior finish to framing; vapour barrier to framing and acoustical vapour barrier sealant; exterior sheathing to framing; building paper to sheathing; exterior finish to sheathing; windows and doors to framing and finish; baseboard trim to framing; and in the case of brick, mortar.

7.2.2 REPLACE OR REPAIR EXTERIOR FINISH

Exterior finish is replaced at the end of its useful life, in the event of damage due to weather, to upgrade the building envelope, or if an aesthetic change is desired. Replacing finish material can generally be done without large scale disruption to other building components. Potential sources of waste include: exterior finish material, fascia, soffits, eavestroughs and downspouts, caulking, mortar, brick ties, flashing, building paper, and sheathing. Connections to consider include: brick to brick (mortar), building paper to sheathing, and brick ties and flashing to sheathing.

CHAPTER 8 - ROOFING

8.1 TYPICAL ASSEMBLY

Although a variety of roofing assemblies are currently used, the most common includes asphalt shingles on particleboard sheathing fastened to pre-manufactured wood trusses.[20] For the purposes of this report insulation, vapour barrier and finished ceiling are considered part of the typical assembly to account for the fact that certain roof renovations will impact on all those materials. It should also be noted that for the purposes of this analysis, pitched roof (slopes from 3:12 to 12:12) is considered typical.

Figure 5: Typical Roof Assembly

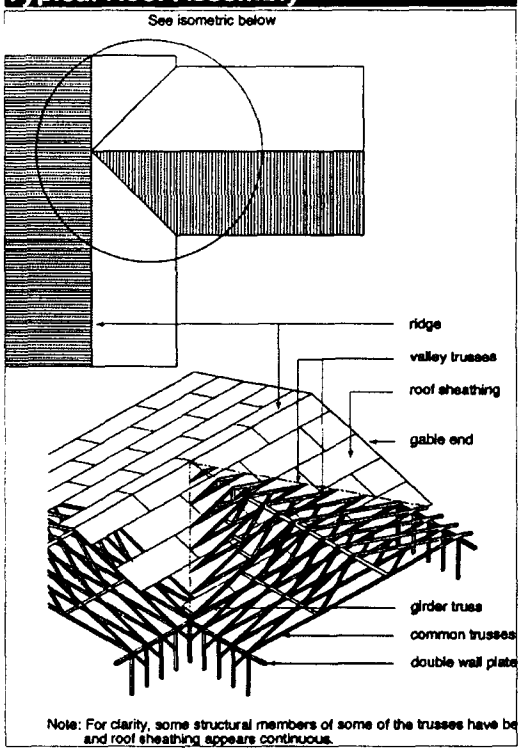

8.2 REASONS FOR RENOVATING

The following is a description of the two most common roof renovation scenarios. Within each is an outline of causes, solutions, potential sources of waste and connection considerations.

8.2.1 MINOR ALTERATIONS

A roof's construction may be altered to accommodate the installation of a skylight, wood or natural gas stove chimneys, or vents. Installation can be performed with relatively minor disruption of the roof's assembly. Potential sources of waste include: roof finish, flashing, sheathing, framing, ceiling finish, insulation, and vapour barrier. Connection considerations include: roof finish to sheathing, flashing to roof finish, roof sheathing to framing, and ceiling finish and vapour barrier to roof framing.

8.2.2 REPLACE ROOF FINISH

A roof's finish material is typically replaced at the end of its useful life, in the event of damage or if aesthetic change is desired. Replacement can generally be performed without significant damage or disruption to the home's other building components. Potential sources of waste include: roof finish, eave protection, flashing, and roof sheathing. Connection considerations include: roof finish to sheathing, flashing to roof finish, eave protection to sheathing, and sheathing to roof framing.

8.2.3 EXTEND AS PART OF AN ADDITION

A home's roof must be extended to accommodate the addition of living space. The floors upon which the addition is taking place will affect the extension of the roof. If the ground floor is extended on a two-story home the existing roof will likely not be affected. In a bungalow, or if the second story is being extended on a two-story home, the existing roof will probably be impacted during renovation. Potential sources of waste include: new and existing roof finish, roof framing, sheathing, eave protection, flashing, fascia, soffits, eavestroughs and downspouts, vapour barrier and sealant, insulation, ceiling finish, and tape and plaster. Connections to consider include: new and existing roof finish to sheathing; sheathing to roof framing; eave protection to sheathing; flashing to roof finish; fascia and soffit to framing; eavestroughs and downspouts to exterior finish; roof framing to exterior walls; vapour barrier to roof framing; strapping and finished ceiling to the underside of roof framing.

CHAPTER 9 - OBSTACLES TO DISASSEMBLY

Based on the analysis of each of the typical renovation scenarios and the traditional sources of waste and methods of connection, the following is a description of the obstacles to disassembly which exist in traditional design. The obstacles are grouped into elements of a home's construction for clarity and organization. Each of the obstacles outlined contribute to current, prevalent wasteful renovation and deconstruction.

9.1 FOUNDATION

Cast-in-place concrete's lack of modularity makes it impossible to adapt, disassemble or reuse for the same purpose. Although it is extremely moldable during installation, which makes it a flexible material during design, once cured its salvageability is limited to recycling.

9.2 FRAMING & SHEATHING

Wood wall and floor framing is typically fastened with nails, making disassembly difficult and wasteful. Similarly, wall and roof sheathing is typically fastened to wood framing with nails, also contributing to wasteful disassembly. Subfloor is typically glued to floor joists to prevent separation and inhibit squeaking, which makes its salvage for reuse or recycling difficult.

9.3 INTERIOR FINISH

Drywall joints are typically taped and plastered to conceal seams. This makes locating joints difficult and salvage of reusable boards virtually impossible. Paint, vinyl and wallpaper contaminates the panel, eliminating the possibility of recycling. Vinyl sheet flooring is typically adhered to underlay with large quantities of glue making the finished flooring difficult to remove. As a result the vinyl and underlay are rarely reusable, and difficult to recycle due to the adhesive contamination.[21]

9.4 THERMAL & MOISTURE PROTECTION

Polyethylene vapour barrier joints are typically sealed with caulking, making salvage of the material for recycling a messy and labourious task. Similarly, drainage layer installed to enhance foundation wall dampproofing is typically fastened with asphalt compound. Consequently, the material is not considered salvageable.

9.5 EXTERIOR FINISH

Brick veneer is typically constructed with mortar, making disassembly an extremely labourious and potentially wasteful process. Asphalt shingles are typically fastened to roof sheathing using nails. If the shingles are brittle or have bonded together, disassembly is difficult and wasteful.

CHAPTER 10 - WASTE & DIVERSION ISSUES

Although each of the obstacles to disassembly detailed above result in wasteful renovation and deconstruction practices, it should be realized that other factors also contribute to reusable or recyclable materials being disposed of in landfills. Other factors include: the status of local reuse and recycling markets; hauling and tipping fees; landfill materials bans; workforce sensitivity to waste reduction issues; degree of on-site source separation effort and enforcement; the price of new materials; and project scheduling (tight time-lines restrict material salvage rates).[22]

The following is an analysis of waste and diversion issues of the common building materials outlined as potential sources of waste in each assembly's renovation description. The descriptions are intended to provide insight into the current state of each material's reusability and recyclability and specific disposal issues.

10.1 CONCRETE

Cast-in-place concrete is not reusable in its original form, but can be crushed and recycled as inert fill material or as granular sub-base for certain road construction applications.[23] Crushed concrete does not, however, yield a good rate of return as fill or sub-base material. Wherever possible opportunities to reuse large sections of a disassembled foundation wall should be explored. Depending on the size of pieces there may be a market for use as patio stones, gabion walls, retaining walls, or as a landscaping feature. Prohibitive tipping fees (due to the weight of concrete) discourage landfilling. Depending on the region, landfill bans may prohibit the dumping of concrete altogether.

10.2 BRICK

Although extremely labour intensive, old brick can be separated from mortar and reused on-site or in the construction of chimneys and fireplaces. If not reusable, brick can be crushed and recycled as inert fill or as landscaping top cover. Due to its structural inadequacy, recycled clay brick is not acceptable as granular road sub-base.[24] Similar to concrete, prohibitive tipping fees make landfilling impractical.

10.3 DIMENSIONAL LUMBER

Dimensional lumber studs and floor joists can be reused if they are salvaged in good condition. Depending on the care taken to remove the lumber, reuse opportunities may be limited to blocking, backing, shorter studs and joists, and lintels. If quantities warrant, recycling possibilities include: feedstock for oriented strand board; animal bedding; landscaping and landfill cover; absorbent for oil spills; raw fuel source; and as a bulking agent in composting operations.[25] Most wood chippers and grinders used to process recycled dimensional lumber will accept wood embedded with nails, staples and fasteners.

Roof framing is generally not a waste issue due to the fact that pre-manufactured trusses arrive on site complete and ready for installation. As a result there are no off-cuts and disassembly can normally be performed to salvage the trusses intact. Strapping, is used, and fascia boards can be salvaged for reuse or recycling as described above.

To discourage excessive dumping of dimensional lumber, certain municipal landfills raise tipping fees if the volume of any given load exceeds an acceptable percentage of wood content. For example the Regional Municipality of Ottawa-Carleton's landfill site doubles its tipping fee if the wood content exceeds 20% of the entire load.[26] If reputable reuse and recycling facilities exist, others may ban the dumping of clean wood altogether.

10.4 PLYWOOD AND PARTICLEBOARD

Plywood and particleboard sheathing and underlay are both reusable if they are removed carefully and in good condition. The recyclability of both may, however, be restricted due to its glue content. Similarly, their recyclability may be restricted by the presence of finish flooring and subfloor adhesive. Research into whether each can be recycled to manufacture new sheathing and underlay has been inconclusive. Both are, nonetheless, acceptable as landscape material, landfill cover or as animal bedding.

10.5 DRYWALL

Due to the manner in which drywall joints are conventionally finished (with tape and plaster), joints are difficult to locate and the screws are hard to access. As a result drywall panels are rarely salvageable in a condition suitable for reuse. Smaller pieces, however, can be placed in the cavities of uninsulated interior wall partitions.[27] Depending on the volume, this practice even has the potential to enhance the wall's sound transmission, thermal mass and fire retardant qualities. Due to its organic composition, certain municipalities will allow reasonable amounts of ground gypsum to be mixed with topsoil and driveway sub-base materials.[28] Proper authorization should be obtained to ensure that groundwater quality is not compromised.

Drywall is, at this point in most parts of the country, difficult to recycle. Although facilities exist in Canada's largest urban centres which recycle new drywall off-cuts for use in the production of new wall boards, none accept used drywall due to the fact that it is typically contaminated by paint, plaster, wall paper, or vinyl. Clean waste gypsum can also be used for some types of animal bedding or applied as a soil additive.

To promote recycling, certain regional landfill sites will accept separated, clean drywall at a reduced rate. The site itself will then ship large quantities to recycling facilities. Due to the lack of recycling facilities, increased tipping fees is at this point largely regarded as an unfair measure of discouraging dumping.

10.6 POLYETHYLENE VAPOUR BARRIER

Polyethylene vapour barrier joints are typically sealed using caulking, making it extremely difficult to reuse and recycle. If sections containing caulking can be removed, clean polyethylene is reusable and recyclable. Due to the large quantities of plastics entering landfill sites (a result of increased packaging) extensive research and development has been done to find ways of recycling. Sophisticated methods now allow for the recycling of all sorts of plastics into "second generation" products such as bags, park benches, drainage tiles, traffic cones, and various plastic-wood products.[29]

10.7 VINYL FLOORING

Due to the large amounts of adhesive generally applied to install vinyl flooring, it is difficult to salvage in reusable condition. Vinyl is recyclable, but again, glue contamination limits its acceptance at facilities. Similar to polyethylene, clean vinyl can be commingled with other plastics to make a number of "second generation" products.[30]

10.8 ASPHALT SHINGLES

Attempts to salvage shingles in reusable condition is a labourious task which is hindered by the brittle state of older shingles as well as the way in which shingles bond together over time. Although asphalt shingles have typically been difficult to recycle, many road construction companies now accept used shingles for use in the manufacture of asphalt paving material.[31] The growth of this market is resulting in landfill bans trending towards asphalt shingles.

10.9 BATT INSULATION

Due to the fact that batt wall, floor and roof insulation is not mechanically fastened to any other building materials, it is easy to salvage. Batt insulation is reusable if it is in dry condition. Shredded dry batt insulation is recyclable as blown insulation.[32]

CHAPTER 11 - BASIC PRINCIPLES OF DESIGNING FOR DISASSEMBLY

Based on the obstacles to disassembly, common renovation causes and solutions, connection considerations and waste diversion issues outlined, the following are proposed design principles which consider future disassembly. The proposed principles are structured in the form of considerations which are intended to provoke thought about the implications design choices have on the ease of future disassembly. To mirror the obstacles to disassembly outlined above, the principles are grouped into similar categories which reflect elements of a home's construction. The first category are general principles which are grouped to avoid repetition and would apply to all elements of a home's construction.[33]

11.1 GENERAL

Consider designing for versatility which allows a component, assembly or system to accommodate different uses with little change.

Consider designing for durability to allow a material to remain unchanged over its expected life while performing its intended function.

Consider planning for easy access which allows for a component of an assembly to be easily approached with minimal damage and impact to it and adjacent assemblies.

Consider favouring simplicity of design which reduces the complexity of assembling materials, thus facilitating disassembly.

Consider opting for independence of material assemblies from others to allow for minimal damage to adjacent assemblies during their removal, repair and disassembly.

Consider making important information (labeling, ingredients, composition) explicit on each component or material of an assembly. This information will be useful for reuse and recycling of materials after disassembly.

Consider exposing connections wherever possible to facilitate disassembly.

Consider making materials or components with the shortest anticipated lifecycle more accessible than those with longer anticipated lifecycles. This will reduce the generation of unnecessary waste during the replacement or maintenance of materials or components. For example, if plumbing equipment inside an interior wall are known to have a shorter lifecycle than the interior finish material covering the wall, it would be beneficial to make the plumbing accessible without having to damage the interior finish during replacement or repair of the plumbing.

11.2 FOUNDATION

Consider the use of pre-cast concrete panels which lend themselves well to reuse and adaptability. Although not as modifiable during installation, proper design should allow for comparable layout flexibility.[34] In addition, the panelized construction allows for reuse in the same form and for the same purpose with no waste generation.

Consider the use of a preserved wood foundation which can be renovated with the same amount of effort as typical wood framed wall assemblies.

11.3 FRAMING & SHEATHING

Consider the use of reversible connections instead of nails to fasten wood framing. For example screws and bolts are reversible and would facilitate disassembly. Complimentary to the use of reversible connections may be the use of steel stud framing, which is manufactured to be fastened with screws.

Borrowing from the concept of pre-manufactured roof trusses, consider the use of pre-manufactured floor joists which increase allowable clear spans. Increased clear spans reduces connections to beams or load-bearing walls and allows for greater floor space flexibility. In addition, pre-manufactured floor systems arrive on site as a package ready for installation, requiring little off-cutting (thus little waste).

Whenever spans allow, avoid glueing the subfloor to floor joists. Pre-manufactured floor systems are designed to increase clear spans and eliminate shrinkage which ensures a stiffer, quieter floor.

Consider constructing the exterior walls which are most likely to accommodate expansion, with post and beam methods. Incorporating the ability to more easily expand will reduce waste during renovation. Consider infilling the non-loadbearing portion of the wall with steel stud framing which is easily disassembled and reused.

11.4 INTERIOR FINISH

Consider applying a removable membrane to the drywall joints prior to compound application. During disassembly the membrane can then be removed without damaging the drywall or leaving any compound contamination, making the panels reusable.

Consider leaving finish connections (typically drywall screws) exposed or cover joints with an easily removable seam. By making the connections more easily accessible disassembly will be facilitated and, consequently, less wasteful.

Consider the use of materials which possess an inherent finish (paneling) to avoid painting, wallpapering or vinyl coverings which contaminate drywall and restrict its reusability and recyclability. An example of this concept historically was the use of fabrics as interior wall finish. Although the idea is unpractical in a contemporary context, the principle of an easily removable finish remains valid.

Consider the use of flooring finish which is fastened with reversible connections or which only requires minimal adhesive application. For example, there are sheet-flooring products which only require the application of adhesive around a room's perimeter.[35] Hardwood flooring, although perhaps more costly, is durable and reusable if removed carefully.

If head room is not an issue, consider the use of dropped ceilings. Dropped ceiling construction requires minimal mechanical connections, and is therefore easily disassembled. It also allows for easy access to mechanical and electrical runs. Similarly, consider the use of access or raised floors which provides a plenum for electrical wires, communication cables and air distribution. The nature of its construction facilitates disassembly and reuse, producing virtually no waste.

11.5 THERMAL & MOISTURE PROTECTION

Consider the use of a foundation drainage layer which can be fastened mechanically rather than with asphalt compound to facilitate reuse. Similarly, consider using a fastener other than caulking to seal polyethylene air and vapour barrier joints. The use of tape or lapping for instance would serve the same purpose but increase the recyclability of the plastic. Consider also, the use of weather stripping materials, which are easily removed, rather than adhesive caulking to seal window and door installations.

To eliminate the use of a separate air or vapour barrier, consider the use of available composite materials which combine the function of two materials into one. For example, certain finish materials (like water proof paints) or air-impermeable materials like foil-backed drywall may satisfy moisture protection and air barrier requirements.[36]

11.6 EXTERIOR FINISH

Consider the use of systems which minimize connections. Systems which are designed to inter-lock or lap rather than require rigid fixed connections facilitate disassembly, increasing the salvageability and reuse of materials.

11.7 APPLYING THE BASIC PRINCIPLES

Figure 6 illustrates the typical design of a home's foundation, basement framing, flooring, and exterior wall. Figure 7 is a modification of the typical design to incorporate the basic principles of designing for disassembly. The design is meant as a demonstration of the principles in a practical manner, using both available materials and technologies. Figures 8, 9 and 10 are larger details of the boxed areas of Figure 7.

Figure 6:
Typical Design

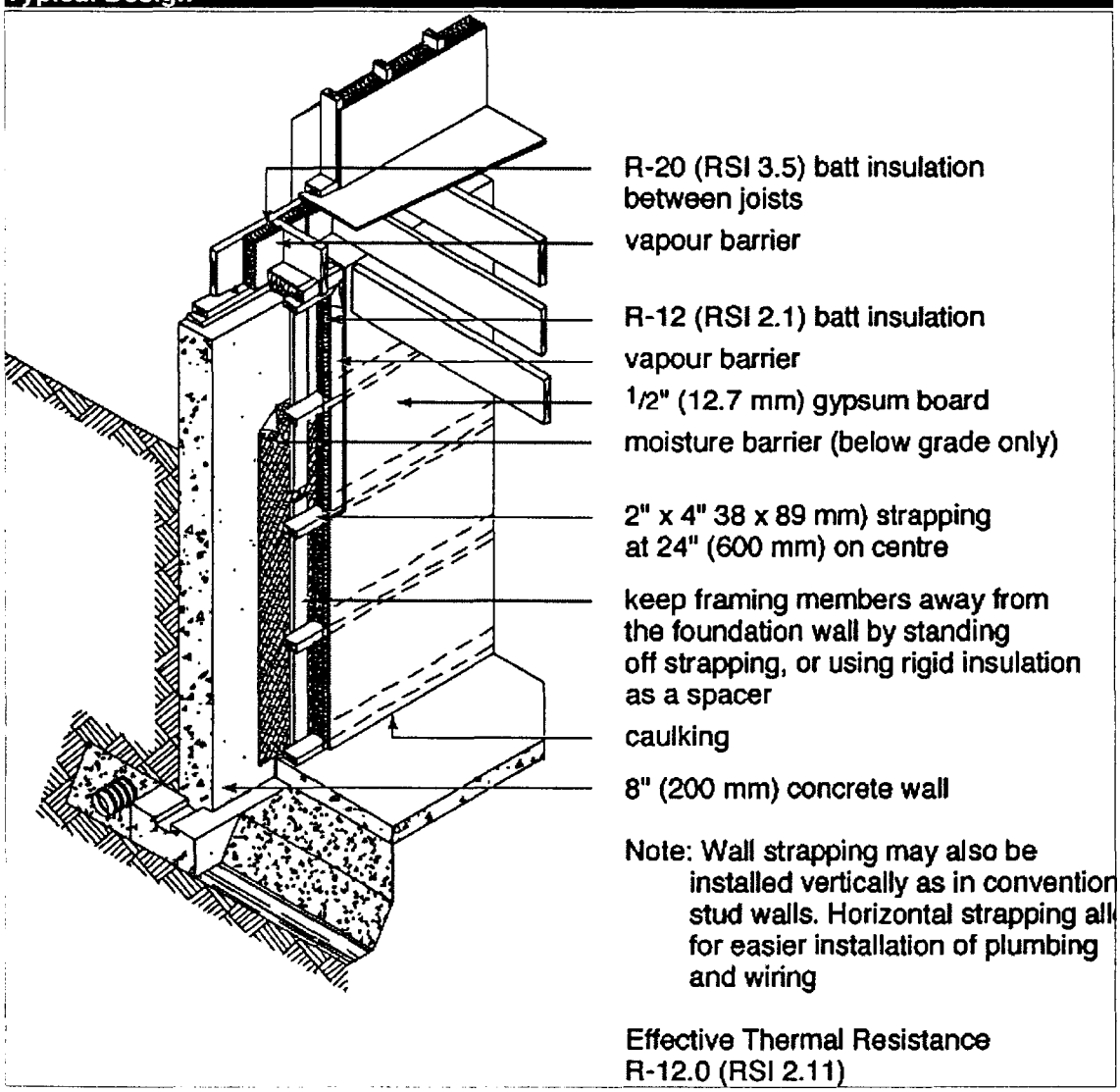

Figure 7:
Modified Design

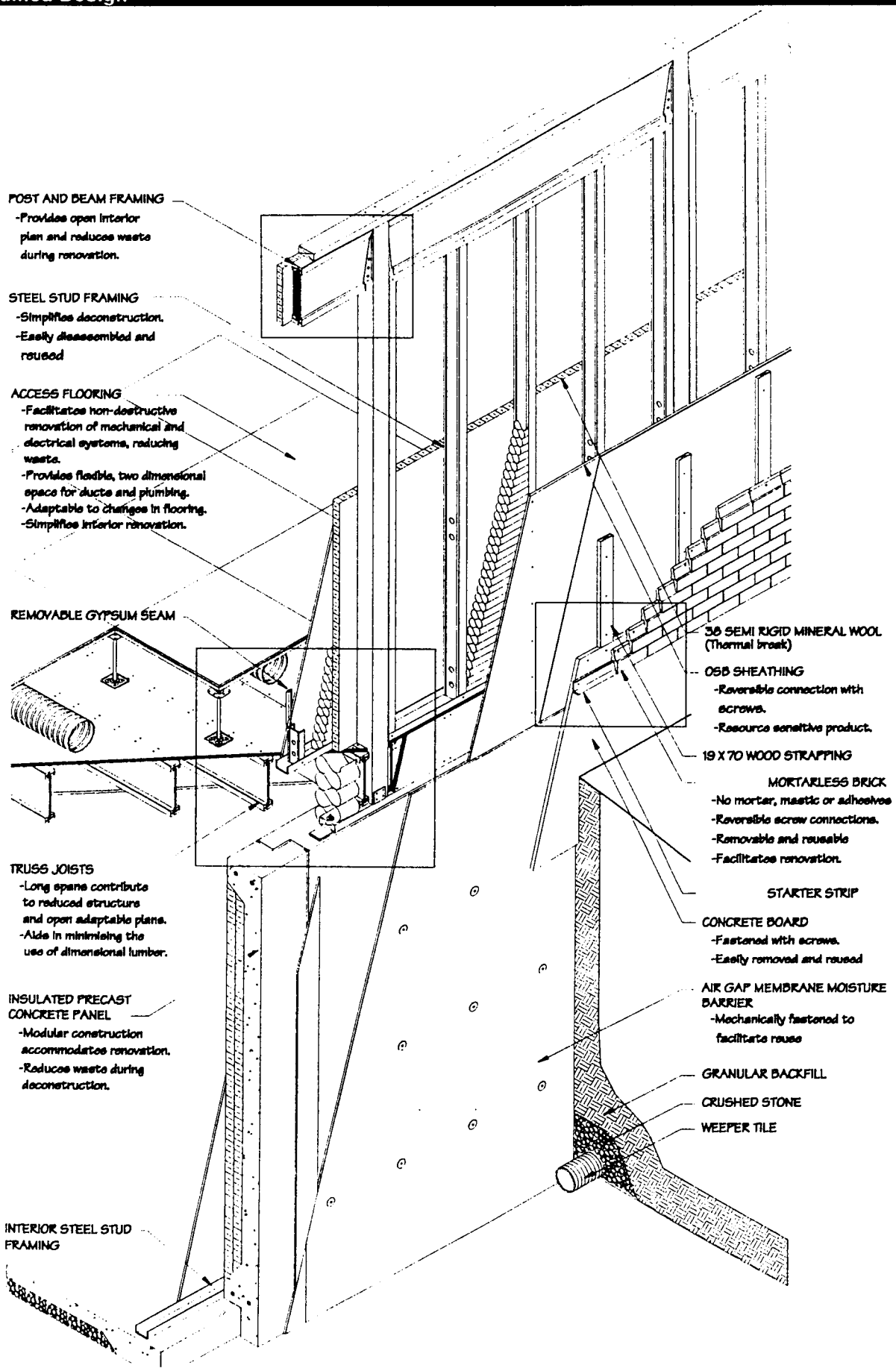

Figure 8:
Modified Floor and Wall Detail

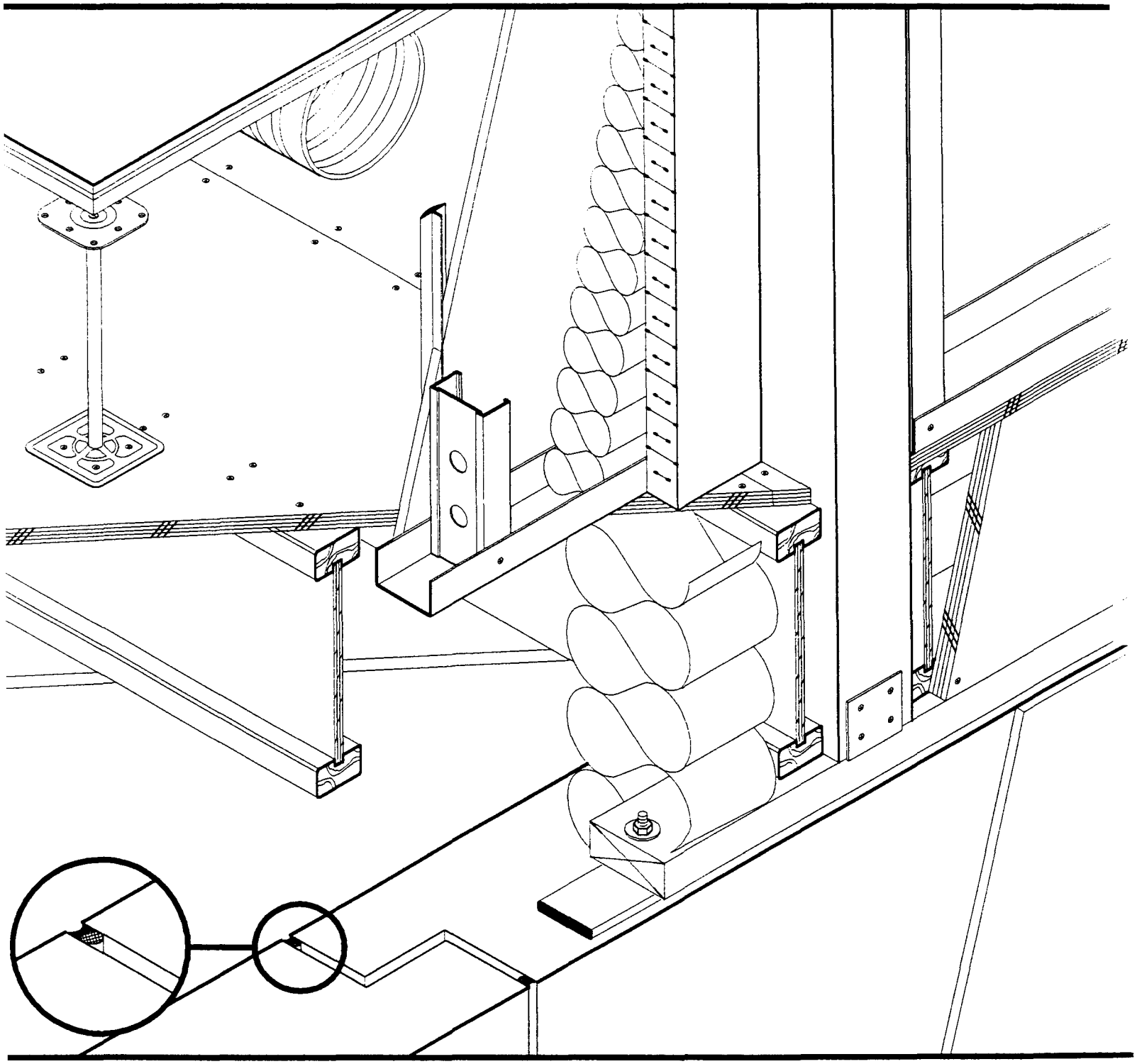

Figure 9:
Modified Post and Beam Detail

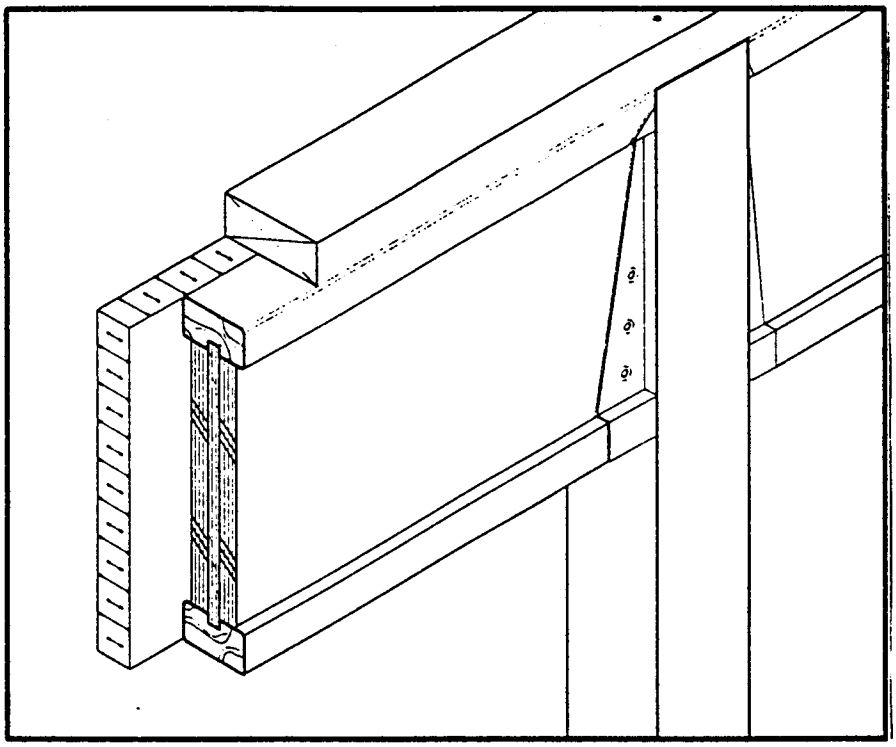

Figure 10:
Modified Exterior Finish Detail

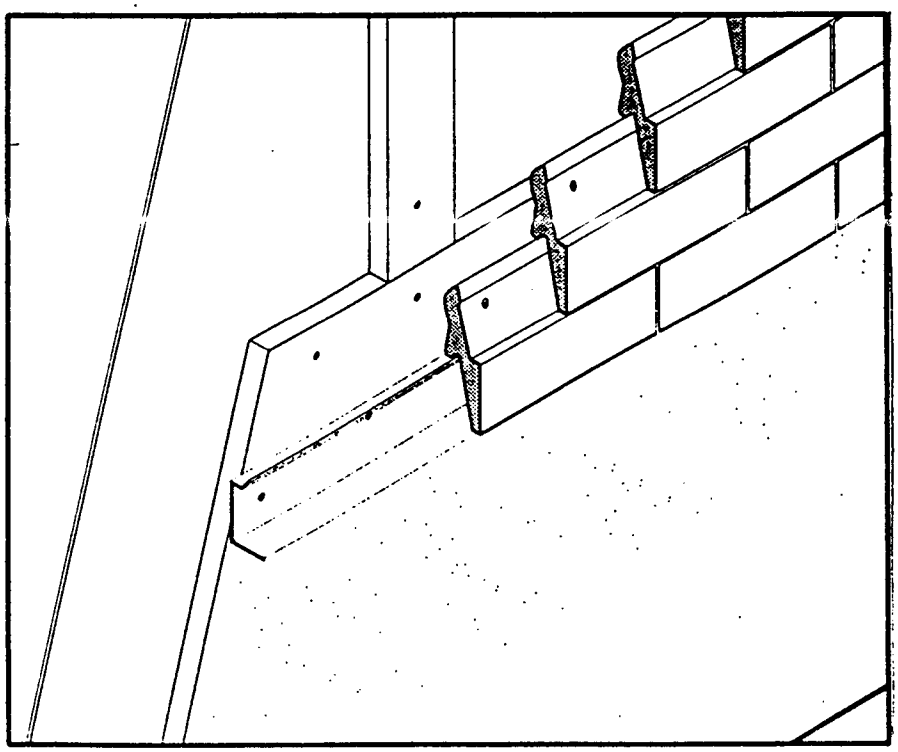

CHAPTER 12 - BUILDING CODE IMPLICATIONS

The National Building Code is currently undergoing a review to analyze all of its requirements to examine the objectives to which each is related. Each objective will then be subject to review to eliminate such things as unnecessary and aesthetic or material-specific biases. The code is striving to be as performance based as possible, to allow for the use of new processes and products which perform adequately but which may have previously had difficulty being recognized due to the current prescriptive approach.

For further information regarding the process of developing national codes and proposing changes to the national code documents please refer to the materials in Appendix B. Because several of the proposed principles are not currently recognized under Part 9 (Housing and Small Buildings) of the NBC, this information will be of interest to individuals or organizations hoping to incorporate the design principles into the renovation or construction of homes.

The process of compliance to the NBC was found to be considered one of the biggest barriers to implementing certain designing for disassembly principles. Although not unprecedented (pre-manufactured roof trusses, steel stud framing, particleboard) instituting NBC changes can be a long and costly process which requires large scale support and pressure from the construction industry.

To determine the current feasibility (with regards to the existing NBC) of the proposed design principles, they were verified with the National Research Council's (NRC) Canadian Codes Centre at the Institute for Research in Construction. The following are discoveries which were made in consultation with an NRC expert. The points are grouped into two broad topics to reflect the various implications that NBC requirements are anticipated to have on the proposed design principles.

12.1 REUSE OF MATERIALS

The reuse of materials is acceptable as long as performance equivalence to new materials can be established under Part 2 of the NBC. This would typically involve a process of testing and re-certification or grading of building materials, a potentially lengthy and costly process. Currently there are few mechanisms in place which promote the establishment of reused building material equivalence. For example dimensional lumber must be re-graded and proven to possess required structural adequacy and minimum moisture content.[37]

Since the code's main concerns are for the health and safety of building occupants, the reuse of materials in non-structural assemblies may have an easier time of fulfilling NBC requirements. Although the NRC is available for consultation and verification of test data, the decision about whether specific reused materials are suitable in construction remains with the local building authority. To demonstrate, the Ontario Building Code (based largely on the NBC) Section 2.7 states: "A chief building official may allow under Section 9 of the Act the use of materials,

systems or building designs not authorized by the building code where the use of the proposed materials, systems or building designs... will, in the opinion of the chief building official, provide the level of performance that would be achieved by conformance with the requirements of the building code."[38]

12.2 MATERIAL ASSEMBLIES

The following are points related directly to the basic principles of designing for disassembly outlined above:

Pre-cast concrete foundation panels are not currently recognized in Part 9 and therefore must be designed in accordance with the requirements of Part 4 (Structural Design) which requires the involvement of a registered, licensed architect and/or engineer.

Screws (as a means of fastening structural members) are not currently recognized in the NBC, which in the event of their use, necessitates the establishment of equivalence based on the existing nailing tables.

The application of glue to the tops of floor joists is not required by the NBC, but is rather recognized as a method of increasing the allowable spacing and clear spans of floor joists.

Post and beam exterior wall construction is currently not addressed in Part 9 and as a result must be designed in accordance with Part 4, which requires the involvement of a registered, licensed architect and/or engineer.

The use of steel stud framing is recognized under Part 9.

The NBC stipulates that drywall joints need only be taped and filled in the event that fire and/or sound ratings are required.

With regards to thermal and moisture protection, the NBC takes a performance based approach. As a result, lapping and taping polyethylene air and vapour barrier is acceptable. Similarly, the use of composite materials such as foil backed drywall is accepted based on its air and vapour barrier performance. In addition, the NBC lists acceptable foundation dampproofing materials, one of which is polyethylene, which would eliminate the use of asphalt dampproofing (which contaminates concrete and the drainage layer, restricting reuse and recycling).

CHAPTER 13 - STUDENT DESIGN COMPETITION

A student design competition was held between Algonquin College, Carleton University and La Cite Collegiale design students in Ottawa. To compliment the research, students were challenged to develop new design ideas which facilitate disassembly and increase the possibilities for waste reduction during renovation and deconstruction.

The competition was made possible with the support of Minto Developments Inc. (who co-sponsored the competition) and the Regional Municipality of Ottawa-Carleton who provided facility space at their headquarters for the exhibit of the student designs.

Seven submissions were received from Carleton University and Algonquin College and were judged by a variety of individuals from different business sectors. The following are brief descriptions of the four winning designs. Please see the entry rules in Appendix C for more context.

First Place: Louise Kraschewski, Algonquin College: *Modular Partition Wall Design.*

Louise's design won based on its simplicity and solid performance in all of the evaluation criteria categories: economic viability, public acceptance, practicality, and environmental implications. The design achieves the overall principles of designing for disassembly by providing a practical demountable, modular interior partition which is almost entirely constructed of available materials. The design enables the disassembly and reuse of the entire wall with no waste generation and minor disruption to the existing structure of the home due to the fact that the wall is only permanently fastened to the ceiling by several screws.

Second Place: Vittorio Bologna, Carleton University: *Adept Breaker Box.*

Vittorio's design deviates from conventional breaker boxes which are primarily situated in the basement of a house. Instead, this design is intended to be installed in a more practical location where it can be easily accessed, such as a kitchen, bathroom, or livingroom. The design facilitates reuse and relocation by sliding into place onto hooks between standard spaced wall studs. The installed box sits flush inside the cavity of the wall and is designed to facilitate any future re-wiring while remaining aesthetically pleasing.

Honourable Mention for Environmental Considerations: Dave McConnachie, Algonquin College: *Dismountable Partition.*

Dave's design focuses on including environmentally responsible materials into a movable, demountable interior partition while maintaining the integrity of fire, physical, acoustical, and environmental separation. The design's strength is not only in the choice of building materials but in the creation of a wall which can allow for spacial flexibility between two adjacent units. The moveable wall is intended to facilitate the adaptation of a home throughout its lifecycle without requiring wasteful and costly renovation.

Honourable Mention for Public Acceptance: Brent Hyde, Carleton University: *The Plumbing Outlet.*

Brent's plumbing outlet is a flexible, reusable plumbing fixture for connecting the supply system and drain, waste, vent (DWV) system to sinks, tubs and toilets. The purpose of the design is to combine the shut-off valves, anti-knock stacks, drain vent, and drain waste connector into one compact product that can be re-configured for any circumstance and reused during renovations. The outlet is fastened to the existing systems and wall through the use of compression fittings, threaded fittings and snap fits. This eliminates the need for glue, solvent or other means of permanent fastening, making it 100% reusable.

CHAPTER 14 - THE EXHIBIT

As part of the research an exhibit was held at the Regional Municipality of Ottawa-Carleton's headquarters from May 21 to May 24, 1998. The exhibit provided us with the opportunity to display background information to explain the research, new design ideas, available products which lend themselves to the proposed principles, as well as the student designs. The exhibit was promoted through the media and large scale fax-outs to members of the housing construction and renovation industry.

Throughout the exhibit people attending were encouraged to complete questionnaires which were used to assess the level of acceptance of designing for disassembly among the housing industry and its market (home owners and potential home buyers). It is estimated that approximately 100 people attended the exhibit throughout the four days. For more information please refer to Appendix D, which includes various materials which surrounded the exhibit.

CHAPTER 15 - INDUSTRY ACCEPTANCE

As mentioned, to gauge the level of industry acceptance designers, home builders, renovators, and demolishers were invited to attend the exhibit. Members of the industry were encouraged to provide constructive, candid feedback so that we could assess the degree of practicality of the new design principles. In addition to feedback received during the exhibit, it should be mentioned that each of the project advisors (all working within the industry) were actively involved throughout the project in providing constructive input and helping to direct the research towards exploring the most practical design principles possible.

17 members of the industry completed the questionnaire, the results are as follows:

How practical do you feel the designs and showcased building materials are?

Very Practical	Practical	Impractical	Unrealistic
3	12	2	1

Do you believe these designs and building materials can be employed within a residential construction?

Yes	No	Not Sure
14	2	1

Do you feel the "Designing for Disassembly" principles will facilitate easier renovation?

Yes	No	Not Sure
14	1	2

Do you feel the "Designing for Disassembly" principles will reduce the amount of waste typically generated during renovation and demolition?

Yes	No	Not Sure
16		1

Have you ever or do you currently use any of the showcased building materials?

Yes	No
5	12

If No, would you consider their use on future projects?

Yes	No
10	2

How do you feel your typical customer/client would feel about incorporating these principles or materials into the construction or renovation of their house?

No Problem	Indecisive	Definitely Not
7	10	0

How important do you feel waste reduction is to your typical customer/client?

Very important	Important	Moderately Important	Meaningless
5	3	6	3

How easily could your workforce adapt to "Designing for Disassembly" principles of construction?

Effortlessly	Smoothly	Some Problems	Difficulty
1	4	11	1

How would the use of "Designing for Disassembly" construction affect the cost of your service?

Greatly Increase	Moderately Increase	No Change	Moderately Reduce	Greatly Reduce
1	13		3	

From these results it is important to note that 12 respondents felt that the designs were practical. In addition, a substantial majority (14) feel that the principles will facilitate renovation.

Worth mentioning also is the fact that 10 felt that their typical customer/client would be indecisive about having their home renovated or constructed in this manner. There is also relative indecision about the importance their typical customer/client places on waste reduction issues.

Notable is the general consensus (13) that constructing a home with the proposed designs and/or principles will moderately increase the overall cost of service.

CHAPTER 16 - MARKET ACCEPTANCE

Home owners and potential home buyers were surveyed during the exhibit to gain an understanding of the level of public acceptance of the design principles. We realize the close connection of market demands to industry response and felt it was extremely important to understand how the public feels about having their home (or portions of it) constructed in a manner which is relatively easy to disassemble. The public were encouraged to provide well contemplated feedback so that we could accurately gauge the readiness of the residential renovation and construction market to these principles.

17 home owners or potential home buyers completed the questionnaire, the results are as follows:

How practical do you feel the designs and building materials are?

Very Practical	Practical	Impractical	Unrealistic
11	5	1	

Would you consider buying a house which incorporated "Designing for Disassembly" principles?

Yes	No	Not Sure
16		1

Would you consider incorporating these design principles and materials into a future renovation of your home?

Yes	No	Not Sure
16		1

How comfortable would you feel to have portions of your home designed in a manner which facilitated future disassembly?

Extremely Comfortable	Comfortable	Uneasy	Very Uncomfortable
12	4	1	

Do you believe these design principles and building materials can save you money in the long term?

Yes	No	Not Sure
10	2	5

When buying or renovating a home, how important are Environmental and Waste Management/Reduction issues?

Very Important	Important	Moderately Important	Unimportant
9	6	2	

Do you believe home builders should offer "Designing for Disassembly" as a feature of new homes?

Yes	No	Not Sure
16		1

In contrast to industry response regarding the practicality of the proposed designs, 11 respondents felt the designs to be very practical. In contrast to the perception among industry members is the public's willingness to incorporate the principles into the renovation of their homes (16 indicated they would consider it), and the public's emphasis on waste reduction issues (9 indicated that it was very important to them when renovating or buying a home).

Most notable, perhaps, is the expressed readiness of the market for the provision of these types of designs by the industry (16 indicated that they would like to see home builders offer designing for disassembly as a feature of new homes).

Other notable observations include the fact that 12 indicated they would feel extremely comfortable about having their homes designed for disassembly and that 10 felt it would save them money in the long term.

CHAPTER 17 - ECONOMIC VIABILITY

To test the economic viability of the principles and modified designs a meeting was held with three individuals within the construction industry: a renovation contractor, an architect for a large tract home builder and a construction estimator. At the meeting the design in Figure 7 was presented along with the project brochure in Appendix D. Based on the experience of those in attendance, a discussion was then held surrounding the costing aspects of designing for disassembly. The following are a summary of the major points raised during the analysis.

In general, it is felt that the principles will at least moderately increase the cost of new construction. The increase is due to a perceived increase in both the cost of labour and the proposed materials which lend themselves to the design principles. In particular it was stated that the pre-cast foundation, access flooring, exterior brick finish, and steel stud framing are all more expensive than other, more commonly used materials.

It was felt that the learning curve for workers shifting their practices would be relatively short. It was pointed out that new materials are constantly being introduced and, as a result, workers have become well equipped and generally open to new or modified methods of construction. It was felt, though, that even after the learning curve the cost of labour would be somewhat greater than building traditionally.

It was agreed that first time home buyers are not likely to pick up the extra cost of construction, and therefore would not be the market for this type of service/product.

Similarly, it was felt that the principles would not work well in a tract home building situation, where costs and special features or options are deliberately kept to a minimum to provide the most affordable housing possible. The concept is likely to be more suited to a niche or custom market which recognizes the benefits and is willing to absorb the extra costs up front.

It was agreed, however, that if contractors were well aware of the nature of a home's construction (and the home owner was also aware of the home's capabilities) the cost of renovation would moderately decrease if it had been designed using the basic principles of designing for disassembly.

To keep the concept as viable as possible, it was felt that the principles should only be applied to portions of a home which are the most frequently renovated (i.e. the rear exterior wall and interior partitions). Applying the principles to parts of the home not typically renovated would be an unnecessary expenditure yielding no return in the long term.

It was felt that deconstruction operations likely had the most to gain economically. It was agreed upon that deconstruction would be greatly facilitated if the principles were used. If designed to be disassembled, it is perceived that the cost of labour would decrease while the value of salvaged materials would increase.

CHAPTER 18 - CONCLUSIONS AND RECOMMENDATIONS

The following are various conclusions and recommendations regarding certain issues encountered throughout the course of the research. Because we feel there is validity in advancing the findings of the research, the recommendations are structured in the form of suggestions to develop the principles further.

The results of the questionnaire indicate that there may be a gap between what home owners want and what industry perceives their wants to be. For instance, the results show that builders are unsure about the emphasis their typical client/customer places on environmental issues. The public, however, clearly express the environment to be a substantial concern when buying or renovating a home. It could be concluded from this that more effective communication is necessary to ensure buyers are getting what they want and builders are supplying products consistent with prevalent demand.

To be expected, the issue of cost is paramount among both the industry and the public. It is generally perceived that the principles would at least moderately increase the cost of new construction. However, it is thought that the cost of renovation would be moderately reduced. Further research will determine whether the principles can in fact save money in the longer term. It is perceived that housing deconstruction has the most to gain economically. Facilitated salvage of materials would decrease labour costs and increase material reuse and recycling value.

The research results also indicate that there is an interest among home buyers to have the design for disassembly offered as a feature of new home construction. Although it is too early to adequately gauge the significance of this interest, it is something which builders may want to begin to consider as a way of distinguishing themselves within the marketplace. The principles will start to develop further if designers and builders see the value in incorporating the principles into a niche segment of their market.

It is thought that, at this point, the design principles may be restricted to a niche or custom market. Tract home building is generally offered in the most affordable manner possible with few features or options. In addition, it is felt that first time home buyers would not be willing to incur the added up front costs of such a feature.

Should the idea catch on, to effectively communicate the details of incorporated design for disassembly principles some form of "as-built" drawings should be supplied to new home buyers as a "time capsule" of the home's design when they take ownership. To protect the proprietary nature of a home builder's or renovator's drawings, detail might be limited to floor plans with a description of assemblies, location of loadbearing structures and services, and connection details. To make the process as useful as possible, it would be beneficial to have a means in place which would require home owners to continually update the "as-built" drawings to reflect any renovations.

Labeling all materials clearly during construction would help renovators to accurately identify material types, grades and compositions during disassembly. This would contribute to waste reduction by providing building officials and contractors with the information they need to advocate reuse.

To truly test the principles developed through the research, a pilot project would be extremely beneficial. Testing designing for disassembly on a new home's construction would provide tangible demonstration of what is possible as well as contribute greatly to the further development of practical design principles.

Extensive work needs to be done to have the principles recognized and accepted by the NBC. Without proven precedents or industry support the current obstacles represented by building codes will continue to impede the concept.

Though the issue of building codes appears initially to be an impediment to the advancement of the principles of designing for disassembly, the reality is that most of the decisions affecting the success of the concept (proof of equivalence, reuse of materials) would be made by the local building authority. This may be an indication of where education needs to initially take place if it is hoped that builders can implement the principles without significant building code problems.

Throughout the research it was discovered that a number of products are currently being manufactured which lend themselves well to the principles of designing for disassembly. The feedback received about the two products displayed during the exhibit indicated that, in general, people are simply not aware of these types of products. There needs to be work done to raise the awareness among the home owners and buyers so that they can start to demand that these types of products be specified and used by home builders and renovators.

REFERENCES

Aggregate Producers Association of Ontario. The Use of Crushed, Recycled Asphalt and Concrete as Aggregate, Brochure.

Alberta Environmental Protection and Action on Waste Program. Waste Minimization Manual: Construction and Demolition Industry.

A.S.P. Access Floors. Access Floor Guide.

by dEsign consultants. Housing Deconstruction Report. 1996.

Canada Mortgage and Housing Corporation. Canadian Wood-Frame House Construction. 1997.

Canada Mortgage and Housing Corporation. Construction and the Environment: How Home Builders and Renovators Can Help Build a Green Future. 1993.

Canada Mortgage and Housing Corporation. Flex Housing: Homes That Adapt, Information Folder.

Canada Mortgage and Housing Corporation. Preserved Wood Foundations. 1987.

Canada Mortgage and Housing Corporation. The Grow Home: Fact Sheet.

Canada Mortgage and Housing Corporation and CANMET, Natural Resources Canada. Building Adaptability: A Survey of Systems and Components. 1997.

Canadian Commission on Building and Fire Codes. National Building Code of Canada. 1995.

Canadian Wood Council. Permanent Wood Foundations. 1992.

Central Precast. Precast Concrete Foundation: Cross Sections.

City of Ottawa Department of Planning, Economic Development and Housing. Building Permit Statistics. 1997.

Congoleum Corporation. Flooring Installation Procedures.

Duncan, S. Blackwell. Whole House Remodeling Guide. 1990.

Edmonton Home Builders' Association, CMHC and City of Edmonton. Partners in Clean Construction (PICC). 1994.

Environment and Plastics Industry Council. News and Views. September 1997.

Environmental Building News. Access Floors: A Step Up for Commercial Buildings. January 1998.

Gibson, Gary J. Permanent Wood Foundations. 1990.

Greater Vancouver Regional District. Job Site Recycling: A Guide for Builders and Developers. 1997.

Irwin, Robert. The Home Remodeling Reorganizer. 1995.

Jager. Super Floor System: Handling & Installation Recommendations.

Key Porter Books. The Complete Home Renovation Manual. 1992.

McGill School of Architecture. The Next Home: Preparing for a New Millennium. 1996.

Ministry of Housing. Ontario Building Code 1990.

National Association of Home Builders Research Center. Deconstruction - Building Disassembly and Material salvage: the Riverdale Case Study. 1997.

National Association of Home Builders Research Center. Residential Construction Waste: From Disposal to Management. 1995.

Nova brik Mortarless Technology. Nova brik Installation Guide.

Ontario Ministry of Housing. Ontario Building Code. 1990.

Ortho Books. Basic Remodeling Techniques. 1983.

Partition Components Incorporated. PC350 Gravity Lock Wall Systems: Information Brochure.

Regional Municipality of Ottawa-Carleton. Description File Information Report: Trail Road Landfill Site - Material Type & Prices. 1998.

Roxul. Roxul Drain Board: Installation Guide.

Sevag Pogharian Design. Sprout: Designing Capacities for Incremental Change. 1994.

Taunton Press Inc. Building Baths and Kitchens. 1989.

Taunton Press Inc. Foundations and Masonry. 1990.

The Greater Vancouver Regional District. Job Site Recycling: A Guide for Builders and Developers. 1997.

Truss Joist MacMillan Ltd. Specifier's Guide to the Silent Floor System.

Vinyl Council of Canada. Environmental Profile: Facts About Recycling PVC.

Westroc Industries Ltd. Modulaire 2 Moveable Partitions: Installation Instructions.

Westroc Industries Ltd. Westroc Foil-Backed Board: Fact Sheet. 1997.

END NOTES

1. Canadian Wood-Frame House Construction, Canada Mortgage and Housing Corporation, 1997, page 30.

2. Ibid, page 66.

3. Ibid, page 83.

4. Ibid, page 145.

5. Ibid, page 88.

6. Ibid, page 68.

7. Building Permit Statistics, City of Ottawa Department of Planning, Economic Development and Housing, 1997.

8. Housing Deconstruction Report, by dEsign consultants, 1996, page 11.

9. Deconstruction - Building Disassembly and Material salvage: the Riverdale Case Study, National Association of Home Builders Research Center, 1997, page 1.

10. The Grow Home: Fact Sheet, Canada Mortgage and Housing Corporation.

11. The Next Home: Preparing for a New Millennium, McGill School of Architecture, 1996.

12. Sprout: Designing Capacities for Incremental Change, Sevag Pogharian Design, 1994.

13. Flex Housing: Homes That Adapt, Information Folder, Canada Mortgage and Housing Corporation.

14. Housing Deconstruction Report, by dEsign consultants, 1996.

15. Canadian Wood-Frame House Construction, Canada Mortgage and Housing Corporation, 1997, page 29.

16. Roxul Drain Board: Installation Guide, Roxul.

17. Canadian Wood-Frame House Construction, Canada Mortgage and Housing Corporation, 1997, page 73.

18. Specifier's Guide to the Silent Floor System, Truss Joist MacMillan Ltd.

19. Canadian Wood-Frame House Construction, Canada Mortgage and Housing Corporation, 1997, page 78.

20. Ibid, page 89.

21. Environmental Profile: Facts About Recycling PVC, Vinyl Council of Canada.

22. Housing Deconstruction Report, by dEsign consultants, 1996, page 12.

23. The Use of Crushed, Reycled Asphalt and Concrete as Aggregate, Brochure, Aggregate Producers Association of Ontario.

24. Ibid.

25. Construction and the Environment: How Home Builders and Renovators Can Help Build a Green Future, Canada Mortgage and Housing Corporation, 1993 page 20.

26. Description File Information Report: Trail Road Landfill Site - Material Type & Prices, Regional Municipality of Ottawa-Carleton, 1998.

27. Partners in Clean Construction (PICC), Edmonton Home Builders' Association, CMHC and City of Edmonton, 1994.

28. The Use of Crushed, Reycled Asphalt and Concrete as Aggregate, Brochure, Aggregate Producers Association of Ontario.

29. Environmental Profile: Facts About Recycling PVC, Vinyl Council of Canada.

30. Ibid.

31. Waste Minimization Manual: Construction and Demolition Industry, Alberta Environmental Protection and Action on Waste Program.

32. Partners in Clean Construction (PICC), Edmonton Home Builders' Association, CMHC and City of Edmonton, 1994.

33. Building Adaptability: A Survey of Systems and Components, Canada Mortgage and Housing Corporation and CANMET, Natural Resources Canada, 1997, page 35.

34. Precast Concrete Foundation: Cross Sections, Central Precast.

35. Flooring Installation Procedures, Congoleum Corporation.

36. Westroc Foil-Backed Board: Fact Sheet, Westroc Industries Ltd, 1997.

37. Ontario Building Code 1990, Ontario Ministry of Housing, 1995 page 9-8.

38. Ibid, page 2-39.

APPENDIX A: LIST OF EXTERNAL SOURCES

Canada Mortgage and Housing Corporation. Healthy Housing: A Guide to a Sustainable Future.

Canada Mortgage and Housing Corporation. Building Materials for the Environmentally Hypersensitive.

Canada Mortgage and Housing Corporation. Environmental Choices for Home Builders and Renovators.

Canada Mortgage and Housing Corporation. Noise Control.

Canada Mortgage and Housing Corporation. This Clean House.

Canada Mortgage and Housing Corporation. Indoor Air Quality.

Leclair, Kim and David Rousseau. Environmental By Design: A Guide for Designers, Architects and Builders, Making Environmentally Aware Choices. 1994.

The American Institute of Architects. Environmental Resource Guide. 1996.

APPENDIX B: BUILDING CODE DOCUMENTS

Guidelines for Proposing Changes to the National Code Documents

Suggestions for changes to the National Code Documents are welcome from anyone at any time; the Codes must change to keep up-to-date. However, they have a long history of successful use and should only change when necessary. The standing committees which deal with proposed changes to the Codes have very full agendas, and the committees' support staff in the Canadian Codes Centre has limited resources to ensure that proposals for change are in a form that is appropriate for consideration by a committee. Therefore, anyone who is thinking of submitting a change proposal should bear the following points in mind:

Who Must Be Convinced?

To bring about a change in one of the National Code Documents, you must convince the appropriate standing committee that a change is needed in the subject code and that the change you propose is technically correct. These standing committees are made up, not of NRC or other federal government personnel, but of volunteers from all regions of Canada and all facets of the construction industry.

Supporting Documentation

Thus, before any change to a National Code Document is implemented, a standing committee of volunteers must be convinced. Because these volunteers are chosen for their expertise in the area covered by their respective standing committees, it is unlikely that a change proposal that is only an expression of opinion will succeed in convincing a standing committee to change the Code. Proposals to change one of the National Code Documents should therefore be accompanied by enough documentation to make a convincing technical case that a change is needed, and that the proposed change is the right one. This documentation can include research and testing results, statistics, case studies and so forth.

Cost/Benefit Analysis

One important aspect of documentation supporting a proposed change to a Code is information on the costs of implementing it and the likely benefits to be achieved. This is not to suggest that every Code change proposal must be accompanied by a detailed cost/benefit analysis; however, the standing committees are expected to give due consideration to these questions and reasonably expect proponents of changes to contribute information that will assist them in this task. Where the proposed change has major cost implications, the standing committees may ask that a detailed cost/benefit analysis be provided.

Enforceability

Proponents of changes to the Codes should also bear in mind that there is little use in introducing requirements for which there are no practical means of enforcement. For example, the National Building Code is intended to be enforced by municipal building departments in jurisdictions which adopt it. The involvement of a municipal building department with a building normally ends once the building is completed. Therefore, there is little point in proposing the inclusion of requirements related to the ongoing operation of a building in the National Building Code.

. related issue is the question of the implications of proposed changes for the existing -forcement infrastructure. Enforcement agencies, such as municipal building departments and : services, have increasingly limited resources, so proposing requirements that would call for ıbstantial increases in enforcement resources would need a very strong justification to be :eived favorably by the standing committees.

..erefore, a proposal for a change to a National Code Document should include information on nforcement implications, including available resources.

arity

'he standing committees also reasonably expect proponents to make very clear what specific ange they would like to see. Proposals should identify the existing code requirements that are .oposed to be changed, along with the shortcomings of the existing requirements. As well, new vording should be suggested to address these shortcomings. It is recognized that not all those :erested in improving the Codes can be experts in Code writing, and Codes Centre staff will be ɔle to suggest improvements in proposed wording, if necessary. Nevertheless, if specific vording is used, it will help to make the proponents' intentions clear. Proposals for changes that : not clear run the risk of being returned to the proponents for clarification, prolonging the time equired for the standing committees to deal with the proposals.

'ming

. ne Codes are revised and published according to a schedule; thus, there may be a considerable 'elay between submission of a proposal for change and its implementation in the relevant Code, 'en if the proposal has clear sailing through the committee and public review processes.

n each Code cycle, the Canadian Codes Centre publishes a closing date for submission of ·oposed Code changes. Those submitted before this date are assured of being considered by the levant standing committees for possible inclusion in the next edition of the Codes, while those ;ubmitted after this date will probably have to wait until the next Code cycle. This closing date is ɔout two years before the end of the cycle. This amount of time is required for processing .roposed changes through the standing committees and through the public review, translation ınd publishing processes.

ven when a proposed change is submitted prior to the closing date, one cannot be assured that :he relevant standing committee will be prepared to deal with the proposal, especially if it is an ‹tensive, complex or controversial one. The committee may decide that more research is required _r may even decide to form a special task group to study the issue, possibly delaying implementation into the next cycle. Thus, such extensive, complex or controversial proposals ıould be submitted as early in the Code cycle as possible.

ı hose with an active interest in the contents of the National Code Documents should maintain an ɜwareness of the various stages of the Code cycle and time their interventions accordingly.

;tick to Technical Issues

With few exceptions, the National Code Documents are strictly technical in nature and do not deal vith administrative issues, such as what professional qualifications are required to perform certain functions, or whether the compliance of products with referenced standards is necessary for certification by a particular agency. The provincial and territorial agencies which adopt the Jational Code Documents have instructed the Canadian Commission on Building and Fire Codes (CCBFC) to avoid addressing these issues in the Codes because to do so would create potential

conflicts with related provincial/territorial legislation and regulations. Therefore, proposals to change the Codes to address these issues will not even be brought to the attention of the standing committees, unless there is some doubt that they are strictly administrative in nature.

Stick to Generic/Widespread Issues

It is impractical for the National Code Documents to deal with specific products or with situations that arise only rarely. Proposals for change should therefore be limited to generic or widespread issues. Innovative products not yet covered by standards are not necessarily excluded from use by not being mentioned in the codes; they can be accepted by local authorities based on the equivalence provisions in the codes and services, such as NRC's Canadian Construction Materials Centre, are available to assist authorities in evaluating such equivalence. Similarly, unique situations are best dealt with by local authorities rather than swelling the codes with requirements that are seldom used.

Summary

Proposals to change one of the National Code Documents should be framed in such a manner as to convince a committee of volunteer experts that there is a problem with certain existing requirements of the Code or an omission in those requirements. The proposals should also be accompanied by documentation to support the case being made, including information on the likely costs of implementing the proposed change.

Each proposal should answer the following questions:

- What is the problem?
- What is the proposed solution and how does it address the problem?
- What are the cost implications?
- What are the enforcement implications?

Proposals should be as clear as possible and should be submitted at an appropriate point in the Code cycle. They should address only generic or widespread technical issues and avoid administrative issues.

The CCBFC has instructed the staff of the Canadian Codes Centre to return to the proponents proposals which do not satisfy these criteria, because the agendas of standing committees are too full to allow time to deal with incomplete proposals. The staff of the Canadian Codes Centre is available to help proponents prepare suitable submissions, but the onus is on the proponent to satisfy these criteria.

Proposed Change Form

The attached form can be used for submission of proposed changes, although its use is not mandatory provided these guidelines are satisfied. Where the form does not provide sufficient space for the information you wish to include, please attach additional sheets as necessary.

National Research Council Canada
Conseil national de recherches Canada

stitute for Research in Construction
Institut de recherche en construction

For staff use only:
Date Received _____
Standing Committee on _____
PCF# _____

Proposed Change to a National Code Document

(only one proposed change on any one submission - duplicate as necessary - print single sided)
Attach additional pages as necessary or use any other format as long as all the information indicated below is included.)

Mail to:
Secretary
Canadian Commission on Building and Fire Codes
Canadian Codes Centre
National Research Council Canada
Building M-24, Montreal Road
Ottawa, Ontario
K1A 0R6

Name _____ Phone # (____) _____ Fax # _____
Address _____

ocument
- ☐ National Building Code
- ☐ National Plumbing Code
- ☐ National Energy Code for Buildings
- ☐ National Fire Code
- ☐ National Farm Building Code
- ☐ National Energy Code for Houses

Edition
- ☐ 1990
- ☐ 1995/1996

ode Reference it is proposed to change _____
(Article, Sentence, etc.)

roblem - Why should the existing provision be changed or, if proposing an addition to the Code, what is missing?:

Proposed Change/Addition - What wording for the change/addition do you think should be used in the Code?:

complete next page as well

Justification/Explanation - How does proposed change/addition address the problem?:

Cost Implications - Will the change/addition entail any added costs? Will it provide benefits measurable in monetary terms?:

Enforcement Implications - Can the proposed change/addition be enforced by the infrastructure available to enforce this Code? Will its enforcement require an increase in resources?:

Other Comments:

Attached Supporting Material:

Please leave this space blank

APPENDIX C: STUDENT DESIGN COMPETITION INFORMATION

STUDENT DESIGN COMPETITION!

BACKGROUND

by dEsign consultants and Minto Developments Inc. are pleased to announce an environmentally focused student design competition. by dEsign consultants is currently involved in an external research project with Canada Mortgage and Housing Corporation (CMHC) and is seeking innovative environmental design ideas. The objective of the research is to develop designs which will facilitate future renovation or deconstruction (the systematic dismantling of a structure to salvage materials for reuse and recycling) of single family residential units.

OBJECTIVES

The objective of the competition is to design an assembly, or a component of an assembly which:

- ❑ **REDUCES WASTE DURING CONSTRUCTION.**
- ❑ **REDUCES WASTE DURING RENOVATION & DECONSTRUCTION.**
- ❑ **MAXIMIZES THE ABILITY TO REUSE & RELOCATE THE ASSEMBLY & ITS COMPONENT PARTS.**

ACCEPTABLE DESIGNS

To meet the objectives of the research project, designs should be of one of the following assemblies, or of any of their individual component parts:

- ❑ **FOUNDATION.**
- ❑ **FLOOR.**
- ❑ **INTERIOR PARTITION.**
- ❑ **EXTERIOR WALL.**
- ❑ **ROOF.**

SUBMISSION REQUIREMENTS

Designs should be communicated through one of the following means:

1. **COMPUTER OR HAND DRAFTED DRAWINGS ON 2 (MAX.) A1-SIZED SHEETS MOUNTED ON DISPLAY BOARD(S).**

   OR

2. **PHOTOGRAPHS OF FULL SCALE CONSTRUCTION MOCK-UP DISPLAYING CROSS SECTION OF ACTUAL BUILDING MATERIALS, CONNECTIONS AND ASSEMBLY ON 2 (MAX.) A1-SIZED SHEETS MOUNTED ON DISPLAY BOARD(S).**

EVALUATION CRITERIA

All submissions will be judged by a panel of design industry professionals. Submissions will be based on how well the design addresses the following evaluation criteria:

- ❑ **ECONOMIC VIABILITY**
  Design Should be Cost Competitive with Conventional Methods and Materials.
- ❑ **PUBLIC ACCEPTANCE**
  Design Should be Aesthetically Appealing to Majority of Potential and Existing Homeowners.
- ❑ **PRACTICALITY**
  Design Should Consider the Availability of Materials and Simplicity of Construction.
- ❑ **ENVIRONMENTAL IMPLICATIONS**
  Design Should Consider such Issues as: Embodied Energy, Recycled Content of Materials, Material Lifecycle, and the 3Rs Hierarchy.

AWARDS

The competition's winners and honourable mentions will have their work displayed and their awards presented at an exhibit at the Regional Municipality of Ottawa Carleton's headquarters. Design industry professionals, home builders, media and the public will all be invited to attend the exhibit. The awards are as follows:

1st PRIZE:	$150 cash, an award certificate, Internet display of the design, coverage in *Wastenot* Newsletter - a quarterly publication on cost effective sustainable construction and demolition with a distribution to 8,000 industry professionals across Canada, and profile in the final CMHC research report.
2nd PRIZE:	$100 cash, an award certificate and profile in the final CMHC research report.
HONOURABLE MENTIONS:	An award certificate and profile in the final CMHC research report.

ELIGIBILITY

Students enrolled in studies at Carleton University, Algonquin College, La Cite Collegiale or other recognized educational institutions are eligible to register. Entry will be granted at the discretion of participating faculty members and by dEsign consultants.

DEADLINE FOR ALL SUBMISSIONS

Submissions will be accepted no later than 3:00 p.m. E.S.T. March 13, 1998 at the office of by dEsign consultants: 24 Spruce Street, Ottawa, K1R 6N7.

INQUIRIES

All inquiries regarding the competition should be made to:

Derek Badger
by dEsign consultants
tel: 230-5776
fax: 230-4149
email: dbadger@bydesignconsultants.com

REGISTRATION INFORMATION

Students interested in entering the competition should complete the following form and submit it to by dEsign consultants by February 6, 1998. Upon receipt and approval of the registration form, students will be issued a competition entry number. Competition entry numbers must be prominently displayed on all final submissions. Entries with any display of identity other than the competition number will be disqualified.

STUDENT DESIGN COMPETITION REGISTRATION FORM

TEAM MEMBERS (4 MAXIMUM) _____ _____ _____ _____

CONTACT NAME _____
PHONE/FAX/EMAIL _____
SCHOOL & FACULTY _____

BRIEF PROJECT DESCRIPTION _____

Return to:
by dEsign consultants
24 Spruce Street
Ottawa, Ontario
K1R 6N7
OR by fax to:
230-4149

HONOURABLE MENTION

This award is a recognition of outstanding achievement,
Presented to:

Kim Kamo

SAMPLE

for the "Designing for Disassembly"
Student Design Competition

May 21, 1998
Ottawa, Ontario, Canada

Derek Badger,
Manager of Operations,
by dEsign consultants

Bill Ritcey,
Architecture Dept. Head,
Minto Development Inc.

by dEsign Consultants
BUILDING A BETTER ENVIRONMENT

minto

OTTAWA SUN
MAY 23/98

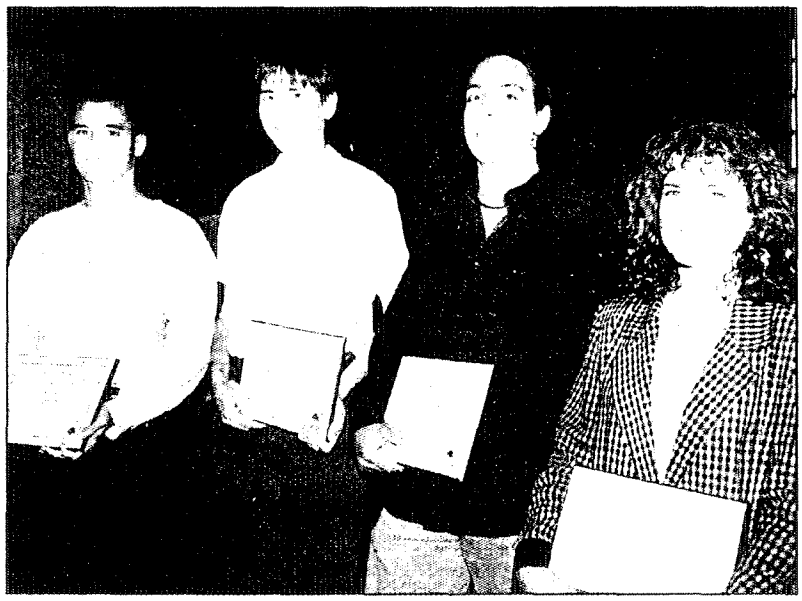

SUN PHOTO

LOCAL STUDENTS, from left, Vittorio Belogna, Brent Hyde, David McConnachie and Louise Kraschewski were acknowledged Thursday for their work in a housing design contest focused on enviro-friendly construction. Kraschewski, an Algonquin College graduate, came away with the $150 first prize.

Design competition results in innovative ideas

Sharp students on the cutting edge

By RITA TRICHUR
Ottawa Sun

LOCAL STUDENTS are starting housing industry trends by taking a greener approach to housing design.

Students from Algonquin College, Carleton University and La Cite Collegiale participated in a design competition organized through by dEsign consultants in cooperation with Minto Development Inc., the Ottawa-Carleton Home Builders Association (OCHBA), the Regional Municipality of Ottawa-Carleton and the Canada Mortgage and Housing Corporation (CMHC) who provided funding under the External Research Program.

Students were challenged to create designs that would reduce waste and maximize the reuse of materials in the event of renovation or demolition.

Vince Catalli, president of by dEsign consultants, says it's important to plan for the future by considering a home's entire life cycle needs at the design stage.

"Waste is a rather complicated issue. More and more people are becoming sensitive to environmental issues these days," says Catalli.

"Waste reduction has an impact on greenhouse gas production which affects climate change issues."

Seven designs were submitted to the competition.

The designs were judged on the merits of economics, acceptance, practicality and environmental considerations.

However, the winning designs took this process one step further by maintaining esthetic value.

An esthetically pleasing design is the key to marketability, says Catalli.

"We don't want to have a house that looks like an office. We have to have public acceptance."

The designs were judged by design professionals, local politicians, contractor representatives and media personalities.

Louise Kraschewski, a graduate of Algonquin College's Architectural Technology program, won the first place prize of $150.

Kraschewski's design entitled "Demountable Modular Interior Partition," won because of its remarkable simplicity.

The model demonstrates how an interior wall partition can be attached to a home's main structure by a series of points in the ceiling.

The partition can then be easily detached by the removal of these points.

Remarkably, the main structure suffers minimal damage and is easily touched up with a little drywall.

This design has a multitude of real world application such as the renovation of nurseries, bedrooms, or dens.

Kraschewski says the design could also be modified to apply to a home's exterior walls.

"It can be easily put together or taken apart," says Kraschewski.

"Recycling and reusing materials without adding to landfills is an issue we have to deal with seriously in the future."

The winning designs will be displayed in the main foyer of the Regional Municipality headquarters, 111 Lisgar Ave., from May 21 to 24.

New environmentally-friendly products will also be displayed by their manufacturers.

Anyone interested in home building and renovation is encouraged to attend.

OWA CITIZEN
AY 16/98

Lego approach reduces construction waste

ANGELA MANGIACASALE

ON SITE

Renovating would be much simpler if we took a Lego block approach to building. Watch any four-year-old renovate her new "house" by lifting a wall of Lego and moving it. No fuss. No waste.

It may never get to be that simple with two-by-fours, but researchers are seeking ways to reduce the complexity and waste in home renovations.

A competition challenged local college and university students learning to design homes to come up with ideas that will move the building industry closer to that Lego-style ideal.

"We call it 'designing for disassembly'," says Derek Badger of by dEsign, the waste management consulting firm that organized the contest.

Two years ago, by dEsign studied the piece-by-piece dismantling of a 6,000-square-foot house in Ottawa, then sold as much as possible of the recovered material for reuse. Instead of the projected 40 bins of rubble such a project would normally generate, only five bins of waste — mostly contaminated wood, asbestos tile and insulation — ended up at the landfill.

"Based on our experience ... we thought, 'What if homes were designed in a different way? They'd be easier to take apart, create less waste and increase reuse of materials,'" Mr. Badger says.

Instead of 40 bins of waste a project normally would generate, only five bins of waste ended up at the landfill..

That spawned the student competition to design homes so they can be pulled apart more efficiently when their owner renovates or expands, with the result that more materials can be reused instead of being junked.

Such ideas won't go anywhere without the support of companies that build homes. But why should builders of new homes worry about what might happen some day down the road when people living in their houses decide to renovate?

Because it's good for the environment, and it's a way for forward-thinking builders to get a leg up on their competition, Mr. Badger says.

The Canadian Home Builders' Association, which is supporting the competition, agrees. "Canadian housing is seen as being progressive, and we feel this is one of the areas where possibly some strides can be made to help alleviate environmental concerns," says John Broniek, the association's technical co-ordinator.

"We'd like to think we take a responsive role in making sure that housing does not increase any environmental pressures on landfills."

Among the submissions to the competition is a design for a partition wall that serves as an entertainment unit. The wall can easily be moved and reused, ideal for separating large rooms or creating rooms in a loft.

Another submission has redesigned the breaker box so it sits within a wall cavity between two studs. This leaves it flush with the wall, which is both more esthetically pleasing and easier to renovate around.

Winning submissions, by architecture students at Carleton University and architectural technology students at Algonquin College, will be on display at the Regional Municipality of Ottawa-Carleton headquarters at Lisgar and Elgin streets beginning Thursday until next Sunday.

●

Want to peek at the coming trends in home furnishings? For the first time in five years, the public is being invited to the Montreal Furniture Market, a trade show for retail furniture buyers.

For four days, more than 100 furniture-makers, mostly from Quebec and Ontario, show off their new creations, hoping to get them into a retail store near you.

The market used to open to the public for one day to allow consumers to browse but not to buy. In the early 1990s, when the economy took a nosedive, manufacturers decided to scale back the trade show, cutting out the public showing.

These days, the manufacturers who survived the downturn and the competition resulting from the North American Free Trade Agreement are doing much better. In 1997 the value of furniture shipments from Quebec alone jumped more than 18 per cent.

So, manufacturers are happy again to welcome the public to a free showing of their products. While you still can't buy at the show, manufacturers will be happy to tell you which retailers will carry their furniture.

The Open House for Consumers is on May 31 from 11 a.m. to 9 p.m. at Place Bonaventure in Montreal on University Street, south of René Lévesque Boulevard, near the Champlain Bridge.

For information, call the Quebec Furniture Manufacturers Association at 1-514-866-3631.

To contribute to On Site, please call Angela Mangiacasale at 596-3704.

Student design competition examines designing for disassembly

The key to successful deconstruction appears to lie in the design process, meaning it is critical during the design stage that consideration be given to future stages in the home's life cycle when renovation is likely to occur.

By Leonard Judge
OCN Staff Writer

A modular partition wall, a cabinet system that can be easily moved, an expandable house that evolves as the occupants grow, a portable humidifying waterfall—these were just some of the innovative ideas displayed at the RMOC headquarters May 21-24.

The displays were entries in a student contest, co-sponsored by Minto Development and by dEsign, an Ottawa consulting firm.

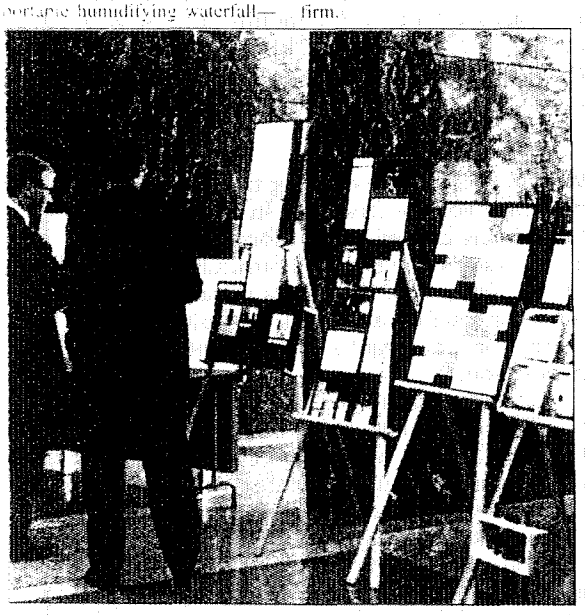

The contest was part of an ongoing research project being conducted by Canada Mortgage and Housing Corporation and by dEsign to examine ways in which homes can be designed to make future renovations easier and reduce the amount of waste ending up in landfill sites.

"As part of our research project with CMHC, we decided to ask students in architect and design programs to submit designs to a student design competition," says Derek Badger, an associate with by dEsign.

"Who better to get involved in this work than students who are just coming out of college or university? Architect and design students are a creative group and we thought it would be a great idea to get them involved."

The contest was open to design students at Carleton University, Algonquin College and La Cite Collegial d' Ottawa.

The students were asked to design a feature of a new home which would make future renovation or deconstruction of the home easier and more efficient from the standpoint of re-using materials. The entries were evaluated on the basis of economy, validity, public acceptance, productivity and environmental implications.

Award winners pose for the cameras.

Please see page 8

RONA
Warehouse
585 WEST HUNT CLUB ROAD, NEPEAN, ONTARIO
TEL.: (613) 226-9953 FAX: (613) 226-4379
Come visit our service experts !

SMYTH FLOORING LTD

To be productive, you must be organized
We have a wide range of shelves, cabinets, racks and dividers to turn your work site vehicles into efficient and space and economical "work-shops on wheels". Our modular product line provides great flexibility by allowing you to mix-and-match, and design the [illegible] interior arrangements that suits your needs [illegible]

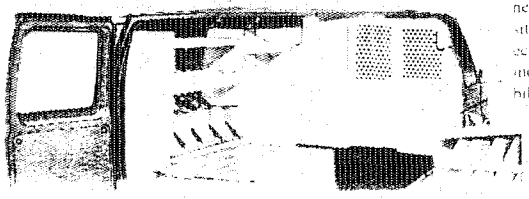

APPENDIX D: EXHIBIT INFORMATION

THE BASIC PRINCIPLES OF DESIGNING FOR DISASSEMBLY

INTERIOR FINISH

Consider leaving finish connections (typically drywall screws) exposed or cover joints with an easily removable seam. By making the connections more easily accessible disassembly will be facilitated and, consequently, less wasteful.

Consider the use of materials which possess an inherent finish (paneling) to avoid painting, wallpapering or vinyl coverings which contaminate drywall and restrict its reusability and recyclability. An example of this concept historically was the use of fabrics as interior wall finish. Although the idea is unpractical in a contemporary context, the principle of an easily removable finish remains valid.

Consider the use of flooring finish which is fastened with reversible connections or which only requires minimal adhesive application. For example, there are products which only require the application of adhesive around a room's perimeter.

THERMAL & MOISTURE PROTECTION

Consider the use of a foundation dampproofing membrane which can be fastened mechanically rather than with tar to facilitate reuse. Similarly, consider using a fastener other than caulking to seal polyethylene air and vapour barrier joints. The use of tape or lapping for instance would serve the same purpose but increase the recyclability of the plastic.

To eliminate the use of a separate air or vapour barrier, consider the use of available composite materials which combines the function of two materials into one. For example, certain finish materials (like water proof paints) or foil-backed drywall may satisfy moisture protection requirements.

RESEARCH & EXHIBIT MADE POSSIBLE THROUGH THE GENEROUS SUPPORT OF

CMHC SCHL Canada

Ottawa-Carleton

minto

Ottawa-Carleton Home Builders' Association

MERKLEY SUPPLY LTD.

Nova brik MORTARLESS TECHNOLOGY

TREBOR

by dEsign Consultants BUILDING A BETTER ENVIRONMENT

Access Floors

DESIGNING FOR DISASSEMBLY

CANADA MORTGAGE AND HOUSING CORPORATION EXTERNAL RESEARCH PROJECT

SPRING 1998

RESEARCH CONDUCTED BY

by dEsign consultants
141 Holland Avenue
Ottawa, Ontario
K1Y 0Y2
tel: (613) 230-5776
fax: (613) 230-4149
Internet: www.bydesignconsultants.com

RESEARCH PROJECT BACKGROUND

Recent trends in certain regions indicate that housing renovation and demolition are rising, while new construction is in some cases falling. Need for home office space, the fact that children are remaining at home longer and the elderly becoming a part of the extended family are all requiring additional floor space. An unstable economy, in which fluctuating interest rates and job insecurity are prevalent, is contributing to homeowners choosing to renovate rather than buy new.

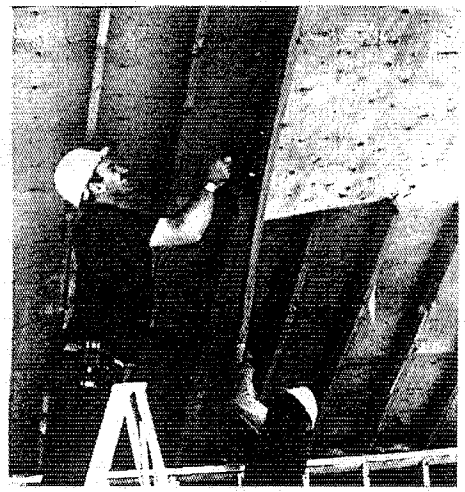

The motivation for this research is a result of a 6,000 square foot housing deconstruction (the systematic dismantling of a structure to salvage as many materials as possible) project by dEsign consultants managed in Ottawa in the summer of 1996. Upon encountering countless obstacles to effective deconstruction, it was felt that disassembly should be a consideration at the beginning of a home's lifecycle (during design) rather than simply in the middle (renovation) or at the end of its lifecycle (during demolition).

The intent of this research is to examine ways in which homes can be designed to facilitate future renovation, thereby reducing the generation of wastes. Essentially, traditional design and construction give little consideration to the eventuality of renovation. As a result assemblies, components and building systems are joined, fastened and connected in a manner which makes disassembly difficult and wasteful.

COMMON OBSTACLES TO DISASSEMBLY

Based on our research, the following is a description of the obstacles to disassembly which exist in traditional design. Each of the obstacles outlined contribute to current, prevalent wasteful renovation and deconstruction.

FOUNDATION

Cast-in-place concrete's lack of modularity makes it impossible to adapt, disassemble or reuse for the same purpose. Although it is extremely moldable during installation, which makes it a flexible material during design, once cured its salvageability is limited to recycling as inert fill material.

FRAMING & SHEATHING

Wood wall and floor framing is typically fastened with nails, making disassembly difficult and wasteful. Similarly, wall and roof sheathing is typically fastened to wood framing with nails, also contributing to wasteful disassembly. Subfloor is typically glued to floor joists to prevent separation and inhibit squeaking, which makes its salvage for reuse or recycling difficult.

INTERIOR FINISH

Drywall joints are typically taped and plastered to conceal seams. This makes locating joints difficult and salvage of reusable boards virtually impossible. Paint, vinyl and wallpaper contaminates the panel, eliminating the possibility of recycling. Vinyl sheet flooring is typically adhered to plywood underlay with large quantities of glue making the finished flooring difficult to remove. As a result the vinyl and plywood are rarely reusable, and difficult to recycle due to the adhesive contamination.

EXTERIOR FINISH

Brick veneer is typically constructed with mortar, making disassembly an extremely labourious and potentially wasteful process. Asphalt shingles are typically fastened to roof sheathing using nails. If the shingles are brittle or have bonded together, salvage for reuse is difficult and thus wasteful.

THE BASIC PRINCIPLES OF DESIGNING FOR DISASSEMBLY

Based on our research and the common obstacles to disassembly, the following are design principles which consider future disassembly. The principles are structured in the form of considerations which are intended to provoke thought about the implications design choices have on the ease of future disassembly.

FOUNDATION

Consider the use of pre-cast concrete panels which lend themselves well to reuse and adaptability. Consider also the use of a preserved wood foundation which can be renovated with the same amount of effort as typical wood framed wall assemblies.

FRAMING & SHEATHING

Consider the use of reversible connections instead of nails to fasten wood framing. For example screws are reversible and would facilitate disassembly. Complimentary to the use of reversible connections may be the use of steel stud framing, which is manufactured to be fastened with screws.

Consider constructing the exterior walls which are most likely to accommodate expansion, with post and beam methods. Incorporating the ability to more easily expand will reduce waste during renovation.

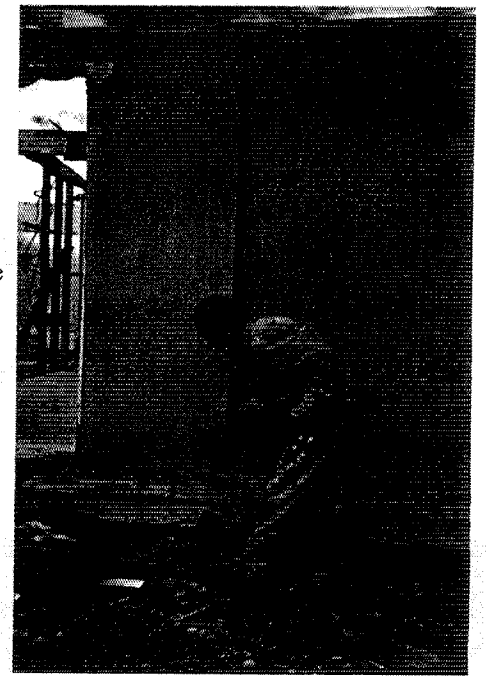

(PLEASE POST & CIRCULATE THROUGHOUT YOUR OFFICE)

You're invited to attend

THE FUTURE OF HOUSING CONSTRUCTION
"DESIGNING FOR DISASSEMBLY"

Join us for the Exhibit Launch, Awards Ceremony & Reception
Thursday, May 21: 5:30pm to 8:00pm
(complementary refreshments and Hors d'Oeuvres reception)

Exhibit
Friday, May 22 & Saturday, May 23: 11:00am to 8:00pm
Sunday, May 24: 11:00am to 4:00pm

Location
Main Foyer, Regional Municipality of Ottawa-Carleton Headquarters
111 Lisgar Avenue, Ottawa.

Come and see the results of new research analyzing ways in which homes can be designed and built to reduce waste, maximize the reuse & relocation of building materials & assemblies, as well as their component parts during renovation and demolition.

The exhibit will feature displays from local architecture and design students as well as various building material manufacturers and distributors, showcasing innovative building materials and designs.

Organized with the support of:

Nova brik MORTARLESS TECHNOLOGY
Ottawa-Carleton
CMHC SCHL Canada
TREBOR
Ottawa-Carleton Home Builders' Association
minto Welcoming Families For Over 40 Years
a.p. Access Floors A DIVISION OF MAXCESS TECHNOLOGIES INC.
by dEsign Consultants BUILDING A BETTER ENVIRONMENT
MERKLEY SUPPLY LTD.

For more information contact:
by dEsign consultants, tel: 613-230-5776 or Email: dbadger@bydesignconsultants.com

MEDIA RELEASE

"STUDENTS DISPLAY HOW TO 'BUILD' FOR THE FUTURE"

Media Release - May 5/98
For IMMEDIATE RELEASE

While students are constantly being perceived as living for today, with little thought of the future, several local students aren't waiting for the walls to crumble around them. They are literally designing their own future.

Students from Carleton University in Ottawa partook in a design competition organized through *by dEsign consultants* in cooperation with Minto Development Inc., the Ottawa-Carleton Homebuilders Association (OCHBA), the Regional Municipality of Ottawa-Carleton (RMOC), and Canada Mortgage and Housing Corporation (CMHC) who provided support to this project under the External Research Program.

"The competition was intended to provoke innovative designs from students, which allow for specific components of houses to be easily disassembled and reused", says Vince Catalli, president of *by dEsign consultants*. Howard Nuk, is eliminating the use of walls. Instead, through the use of a cleverly designed entertainment partition, interior space can be divided without complete separation. The partition can be easily moved and reused and is ideal for separating large rooms or creating a number of rooms in a loft unit. Vittorio Bologna designed a breaker box which no longer sticks out like a sore thumb in your basement recreation room. Instead of protruding out of a wall, the box is meant to sit flush within a wall cavity between two studs, making it more accessible and aesthetically pleasing for any room in a house.

The design submissions, judged by a wide variety of design professionals, local politicians, contractor representatives, and media figures, have been evaluated based on economic viability, public acceptance, practicality, and environmental sensitivity.

If you're a home owner, potential home buyer, builder, or designer, don't miss some of the new and exciting trends for future home construction. The winning designs will be displayed in the main foyer of the RMOC headquarters, 111 Lisgar Avenue, from Thursday May 21 to Sunday May 24, 1998.

The winner will be announced on Thursday May 21, during the exhibit launching ceremony at 5:00pm. 1st prize $150 cash, 2nd prize $100 cash.

For more information please contact:

Derek Badger or Dwayne James
by dEsign consultants
tel: (613) 230-5776
fax: (613) 230-4149
Email: dbadger@bydesignconsultants.com