04-213

Environment Canada

Water Science and Technology Directorate

Direction générale des sciences et de la technologie, eau

Environnement Canada

Planning and design of combined sewer overflow treatment

By:

G. Zukovs & J. Marsalek

NWRI Contribution # 04-213

04-213

Planning and design of combined sewer overflow treatment

G. Zukovs and J. Marsalek

ABSTRACT

A newly produced (2004) Combined Sewer Overflow (CSO) Treatment Technologies Manual provides an overview of practices in, and guidance for, planning, design and implementation of CSO treatment. Towards this end, the manual first addresses CSO abatement program planning in order to provide an overall framework within which the application and design of CSO treatment facilities may be considered. Following the establishment of planning framework, guidance is provided for CSO treatment facility preliminary design, which encompasses such steps as the development of CSO control and treatment objectives, assessment of design flows, development of treatment process, site-specific considerations, and costs and O&M factors. Finally, preliminary design considerations are developed in more detail for CSO retention treatment basins (RTBs), which are commonly applied to control and treat CSOs in the Great Lakes municipalities. Well designed RTBs can meet the Ontario requirements for CSO pollution abatement and thereby contribute to the remedial action in the Great Lakes Areas of Concern.

NWRI RESEARCH SUMMARY

Plain language title

Planning and design of treatment of combined sewer overflows (CSOs)

What is the problem and what do scientists already know about it?

Combined sewer overflows impair water quality and beneficial uses of receiving waters and need to be addressed in water pollution control planning. In recent years, municipal wastewater authorities have been exploring innovative technologies for CSO treatment. To provide municipal decision makers with background information on CSO treatment processes, a new CSO treatment manual has been developed.

Why did NWRI do this study?

CSO are recognized as major contributors to the water pollution encountered in the Great Lakes Areas of Concern. The delisting of such areas requires the abatement of CSO pollution using various measures, including CSO treatment.

What were the results?

The CSO treatment manual has been produced and serves two purposes: (a) To provide information about planning CSO pollution abatement, and (b) to assist users in the selection, design, and application of CSO treatment technologies.

How will these results be used?

The results will be used by municipalities for planning and implementing CSO treatment.

Who were our main partners in the study?

The main partners were XCG Consultants Ltd. (the project contractor), The City of Welland and the Great Lakes Sustainability Fund (Burlington, Ontario).

Planification et conception du traitement pour le trop-plein d'égout unitaire

G. Zukovs et J. Marsalek

RÉSUMÉ

Un manuel récent (2004) de technologies de traitement du trop-plein d'égout unitaire (TPEU) présente une vue d'ensemble de pratiques et d'indications pour la planification, la conception et la mise en oeuvre du traitement du TPEU. À cette fin, le manuel examine d'abord la planification du programme d'assainissement de façon à fournir un cadre global dans lequel peuvent être considérés l'utilisation et la conception d'installations de traitement du TPEU. Après l'élaboration d'un cadre de planification, des indications sont données pour la conception préliminaire, ce qui comprend des étapes comme le choix d'objectifs pour le contrôle et le traitement du TPEU, l'évaluation des écoulements prévus, la mise au point du traitement, les considérations propres au site et, enfin, les coûts et les facteurs d'exploitation et d'entretien. Finalement, des éléments de conception préliminaire sont élaborés de façon plus détaillée pour les bassins de retenue où s'effectue le traitement, éléments qui sont généralement appliqués pour contrôler et traiter le TPEU dans les municipalités de la région des Grands Lacs. Ces bassins de retenue peuvent satisfaire aux exigences ontariennes en matière de dépollution du TPEU et ainsi contribuer aux mesures d'assainissement dans les Secteurs préoccupants des Grands Lacs.

Sommaire des recherches de l'INRE

Titre en langage clair

Planification et conception du traitement du trop-plein d'égout unitaire (TPEU)

Quel est le problème et que savent les chercheurs à ce sujet?

Dans la planification des mesures de décontamination de l'eau, il faut tenir compte du trop-plein d'égout unitaire, qui altère la qualité de l'eau et les utilisations bénéfiques des eaux en aval. Ces dernières années, les autorités responsables des eaux usées urbaines ont exploré des technologies innovatrices pour le traitement du TPEU. Un nouveau manuel de traitement du TPEU a été produit pour fournir aux décideurs des municipalités des renseignements de base sur les procédés de traitement des TPEU.

Pourquoi l'INRE a-t-il effectué cette étude?

On sait maintenant que le TPEU est la principale cause de pollution de l'eau dans les Secteurs préoccupants des Grands Lacs. Pour pouvoir radier ces secteurs, il faut décontaminer le TPEU grâce à diverses mesures, et notamment son traitement.

Quels sont les résultats?

Le manuel pour le traitement du TPEU a été préparé et sert à deux fins : a) fournir des renseignements sur la planification de la dépollution du TPEU; b) assister les utilisateurs dans le choix, la conception et l'application des technologies de traitement du TPEU.

Comment ces résultats seront-ils utilisés?

Les résultats seront utilisés par les municipalités pour la planification et la mise en oeuvre du traitement du TPEU.

Quels étaient nos principaux partenaires dans cette étude?

Les principaux partenaires étaient XCG Consultants Ltd. (l'entrepreneur pour le projet), la Ville de Welland et le Fonds de durabilité des Grands Lacs (Burlington, Ontario).

Planning and Design of Combined Sewer Overflow Treatment

George Zukovs[1] and Jiri Marsalek[2]

[1]XCG Consultants Ltd., 2620 Bristol Circle, Suite 300, Oakville, ON L6H 6Z7

[2]National Water Research Institute, 867 Lakeshore Road, Burlington, ON L7R 4A6

Abstract

A newly produced (2004) Combined Sewer Overflow (CSO) Treatment Technologies Manual provides an overview of practices in, and guidance for, planning, design and implementation of CSO treatment. Towards this end, the manual first addresses CSO abatement program planning in order to provide an overall framework within which the application and design of CSO treatment facilities may be considered. Following the establishment of planning framework, guidance is provided for CSO treatment facility preliminary design, which encompasses such steps as the development of CSO control and treatment objectives, assessment of design flows, development of treatment process, site-specific considerations, and costs and O&M factors. Finally, preliminary design considerations are developed in more detail for CSO retention treatment basins (RTBs), which are commonly applied to control and treat CSOs in the Great Lakes municipalities. Well designed RTBs can meet the Ontario requirements for CSO pollution abatement and thereby contribute to the remedial action in the Great Lakes Areas of Concern.

1. Introduction

The older parts of many Canadian municipalities are served by combined sewers, which in dry weather collect wastewater and transport it directly to a wastewater treatment

plant (WWTP). However, in wet weather, inflows of stormwater or snowmelt can exceed the hydraulic capacity of the collection system. The excess flow is released as combined sewer overflows (CSOs), in order to prevent basement flooding and damage to downstream pumping and treatment facilities.

Even though construction of new combined sewer systems was abandoned about half a century ago, the environmental problems associated with CSOs from these systems persist to this day. The Great Lakes region of both Canada and the United States in particular has been impacted by CSO discharges resulting in beach closures as well as impacts on water, sediment and aesthetic quality. Ten of the original seventeen Canadian Great Lakes Areas of Concern (AOCs), identified by the International Joint Commission (IJC) as requiring remedial action, receive CSOs (Weatherbe and Sherbin, 1994).

Over the last 30 years a broad array of CSO abatement technologies have been applied in these AOCs, including:

- Full or partial sewer separation whereby new sewers are installed to fully or partially separate runoff from sanitary wastewater.
- Tank storage facilities to retain CSO flows until sewer and/or WWTP capacity becomes available following storm events.
- Tunnels, which serve to store and transport CSO to the WWTP.
- Increased central wastewater treatment (WWTP) plant capacity to treat captured CSO.
- Real time control applied to optimize the operation of storage, treatment and collection system components.

Increasingly though, municipal wastewater authorities in the Great Lakes region and throughout Canada are exploring new and innovative treatment technologies specifically designed for CSOs. These technologies, when applied as part of an overall wastewater management strategy, can produce efficient and cost-effective solutions for CSO control. However, like all technologies they require systematic design and proper operation. In many cases the basic information needed by municipal decision makers and their engineers to evaluate, select and design CSO treatment technologies has been difficult to assemble.

The Government of Canada's Great Lakes Sustainability Fund (GLSF) has supported and directed research and remedial action designed to abate CSOs virtually since its inception in the early 1990s. The GLSF has supported a number of studies defining the wet weather pollution challenges in the AOCs and co-funded demonstration projects featuring advanced CSO control technology, including high rate physical and physical-chemical CSO treatment. In keeping with this historic role and sustainability objectives, the GLSF commissioned the preparation of a Combined Sewer Overflow Treatment Technologies Manual (XCG 2004) in partnership with the Region of Niagara and the City of Welland. This manual has been completed and serves to provide information about physical and physical-chemical CSO treatment technologies; and, at the same time to assist local governments and other interested parties with the selection, preliminary design, and application of CSO treatment technologies.

The manual consists of two parts. Part I, Planning and Regulation, provides the planning framework underlying the CSO abatement program development, including an overall program context, within which the decision to apply CSO treatment can be made.

Part I also presents the CSO regulatory requirements across Canada and for the Great Lakes region of the United States. Part II, Design and Implementation Concepts and Treatment Technologies, reviews the preliminary design and implementation of CSO treatment facilities and presents up to date information regarding CSO water quality. The bulk of Part II deals with information on 10 treatment technologies, including preliminary treatment (screening, degritting), physical or physical-chemical treatment (retention treatment basins (RTBs), chemically enhanced high rate sedimentation, continuous deflective separation, vortex separators, dissolved air floatation, fuzzy filters), and disinfection (chlorination/dechlorination, ultraviolet irradiation).

This paper is excerpted from the Manual (XCG 2004). It begins by presenting an overall framework for CSO Program planning, which is followed by an overview of the steps associated with the preliminary design of CSO treatment facilities illustrated using a RTB design.

2. CSO Abatement Program Planning

CSO abatement program development should be a systematic, staged process. Figure 1 presents an overview of the three major components involved in the preparation of a CSO program.

The initial phase, Phase I - the State-of-the-System Assessment, begins with a definition of the study area, as well as the collection of baseline data pertaining to the collection system, treatment facilities and the area receiving waters. Various modelling and analytical tools are developed in this phase. Through the assessment activities of Phase I, the status of the land-based facilities (i.e. collection system and treatment plants) is

evaluated in terms of overflow frequency, volume and loadings, among other factors. At the same time, the Phase I assessment addresses current receiving water quality, as well as the impact of existing CSO loadings. The initial phase also addresses the development of CSO control and treatment objectives and the development and initiation of a consultation program.

The second study phase, Phase II – Formulation and Evaluation of Alternatives, builds on the information and insights developed during Phase I. In this study phase, a framework and specific criteria are prepared to facilitate the systematic development and evaluation of alternative strategies. The alternative strategies are then assembled and through the evaluation process, a preferred strategy is obtained.

The final study phase, Phase III – Implementation Plan Development, completes the preparation of the CSO abatement program. In this phase, the details of the implementation plan are prepared. These address the sequence and timing of proposed works, regulatory approvals, cash flow requirements and post-implementation monitoring and evaluation.

3. CSO Treatment Facility Preliminary Design

There is no single correct approach to the development of a CSO treatment facility preliminary design. Individual designers apply their unique knowledge and background in each case, and call on the manufacturers of wastewater process equipment to provide input to the design of specific unit processes. The preliminary design of CSO treatment facilities involves all the considerations associated with any wastewater treatment plant design plus those arising from the rather unique aspects of an intermittent and highly variable influent.

A second uncommon aspect pertinent particularly to satellite CSO treatment facilities is that they are "green field" developments involving locating a facility where none had been previously present. Special attention must therefore be paid to siting issues and the potential operating impacts such as odours that may be associated with a satellite facility.

Figure 2 presents an overview of the logical steps involved in developing a CSO RTB preliminary design, including: Step1 - Development of CSO treatment objectives; Step 2 - The determination of design flows; Step 3 - The treatment process development ; Step 4 – The determination and consideration of location-specific issues generally associated with siting and integration of facilities; and, (e) Step 5 - Evaluation of costs and operating and maintenance (O&M) impacts for the proposed preliminary design.

The procedure shown is iterative and culminates in the development of a preliminary design which then forms the basis for a final detailed design, complete with plans and specifications.

Steps 1 through 4 are taken together to prepare a draft preliminary design. This draft preliminary design is checked to ascertain whether the CSO treatment and control objectives will likely be achieved. If objectives do not appear likely to be achieved, then an additional iteration will be required. The capital, operating and life cycle costs are then estimated for the draft preliminary design, as are the projected O&M impacts. If the costs and O&M considerations are found to be unacceptable, then additional iterations may be needed. Otherwise, the preliminary design may now be taken to the final detailed design stage.

3.1 Step 1 - CSO Control and Treatment Objectives

The development of CSO control and treatment objectives is the critical first step in the preparation of a facility preliminary design.

CSO Control Objectives are specific statements regarding the desired level of CSO control. Such objectives flow from the water quality objectives, or end-of-pipe objectives, or both. Water quality derived CSO control objectives are determined through water quality modelling of CSO impacts. End-of-pipe CSO control objectives address frequency, level of volumetric control (i.e., fraction of wet weather flow volume captured and treated) or level of loading control.

CSO Treatment Objectives are specific statements regarding the level of treatment needed to meet the CSO control objectives and in turn any water body objectives. The CSO treatment objectives can be specified as effluent concentration limits, effluent loading limits or percentage removal requirements. The averaging period used to assess compliance varies depending upon local circumstances and ranges from a given duration maximum to per event, seasonal or annual averaging. The treatment objectives are based on water quality objectives or end-of-pipe requirements or both.

Table 1 gives some typical examples of both control and treatment objectives.

Table 1. Examples of CSO control and treatment objectives

Objective	Typical Example
CSO Control Objectives	• Reduce the frequency of CSOs per recreation season to 3 events or less.
	• Meet the volumetric control level of 90% for all overflows discharging to the receiving water during the recreation season.
CSO Treatment Objectives	• Reduce CSO total suspended solids (TSS) concentrations by 50% (seasonal average). • Seasonally averaged TSS concentration in the treated CSO effluent should not exceed 90 mg/L. • Reduce $CBOD_5$ concentrations by 30% (seasonal average). • Geometric mean of *E.coli* counts in the treated effluent should not exceed 1000 cfu/100 mL, on a per event basis. This objective applies where there is a potential for recreational water impacts (e.g. beaches).

Considered jointly, the CSO control and treatment objectives should specify the following:

- *The Pollutants of Concern (POC).* In general for the Great Lakes (Ontario and US Border States) and many other jurisdictions, CSO treatment performance requirements are based upon the concept of "primary equivalent" treatment. The measured performance parameters used to establish "primary equivalent" treatment are $CBOD_5$ and TSS. Other pollutants of concern most often addressed by regulatory requirements are floatable materials (gross debris) and bacteria, which require specific treatment train components. Hence, the POC listing used to develop CSO treatment objectives is usually restricted to these four parameters. Other parameters derived from water quality assessments may be included but these may require application of unconventional or previously untested control/treatment technologies.
- *The Level of CSO Control.* The level of CSO control follows directly from the CSO control objectives. It is generally expressed as a frequency of overflow, a percentage volumetric control or a percentage loading control. Using Ontario regulations as an example, the required level of volumetric control is 90% capture of all sanitary flows during wet weather periods. The level of control in turn dictates, along with the CSO characteristics, the treated effluent requirements and the nature of the process train and the sizing of the facility.
- *The Treated Effluent Requirements.* These requirements are not always specified by all jurisdictions and the selection of process trains may be predicated on whatever technology requirements (e.g. primary treatment equivalent) exist in a given locale.

Continuing with an Ontario regulatory example, the Ontario CSO treated effluent requirements are expressed as percentage removal requirements for $CBOD_5$ and TSS, and effluent concentration limits for TSS and *E.coli*. Treated effluent requirements may also be determined from receiving water modelling.

When applied to a specific treatment technology such as an RTB, the "primary equivalent" treatment requirements for TSS and CBOD can be specified as percentage removal requirements and effluent concentration limits. The averaging period for TSS and $CBOD_5$ treatment objectives can range from individual storm events to monthly or seasonal averages.

Other water quality parameters typically considered in CSO treatment objectives include floatables and indicator bacteria (*E.coli*). Treatment objectives for floatables are specified by objectives such as 'Remove gross debris and floatable materials greater than certain size (e.g., 5 mm) in any dimension from all treated CSOs. Treatment objectives for bacteria are typically given as the geometric mean of effluent *E. coli* densities. The target densities are usually specified as not to exceed limit based upon the geometric mean for a storm event. While it is possible to remove other particulate associated pollutants, such as selected heavy metals and phosphorus, these parameters are not normally included explicitly in RTB treatment objectives.

Finally, it is also worthwhile to remember that the RTB will need to be sized to meet any volumetric or frequency based CSO control objective such as 90% volumetric control and the process retention time requirements for any in-tank disinfection. This

means that there will be a number of control and treatment objectives, the most stringent of which will dictate basin sizing.

3.2 Step 2 - Design Flow

The sizing of CSO treatment facilities is dependent upon the flow characteristics of the overflows to be treated. Two approaches have been used historically to define the anticipated CSO flows; individual design storms and a seasonal or annual overflow time series. Both approaches have their place in the sizing of CSO treatment facilities in general and RTBs in particular. In Ontario and in some Canadian municipalities in other provinces the CSO control requirements are expressed as either frequency of overflow or percentage volumetric control derived from a "typical" year rainfall time series input. The latter is called "continuous analysis" involving the modelling of the behaviour of the facilities during wet and dry weather over the entire study period. This continuous analysis approach is also consistent with federal CSO guidance in the United States (USEPA 1995).

The use of the continuous analysis provides a more realistic evaluation of the facility operation over the long term. Firstly, continuous analysis allows update of catchment and facility conditions in the inter-event period. This permits the depiction of more rational initial conditions for wet weather event analysis. Continuous analysis also allows examination of operating requirements and the estimation of consumables (e.g. coagulant) usage and effluent statistics. Moreover, if it is required to assess compliance with water body goals by means of receiving water modelling then continuous analysis is essential. Water body goals are typically based on a percentage compliance with a water

quality standard thus necessitating the time based statistics produced by continuous analysis.

In contrast, the use of design events provides limited information. Design events by their nature are artificial constructs using the statistics of extreme rainfall assembled into a synthetic time distribution. Consequently, it is difficult if not impossible to assess the long term performance of a facility and its attendant water quality benefits using design events. Nonetheless, because of their historical and present usage for drainage design and for CSO control design as practised in British Columbia, their use continues (XCG 2004).

The preliminary design of CSO treatment facilities including RTBs using single design storms is discouraged. However, the analysis of facility hydraulic behaviour under extreme peak flows is a useful application of design events. Once the facility process selection, layout and sizing is completed, the designer should evaluate the hydraulic behaviour of the control structures and the facility, including any bypass provisions, using one or more design events of varying return frequency and time base. This type of analysis can highlight hydraulic design weaknesses.

The continuous analysis approach to RTB preliminary design develops a volume balance for CSO flows arriving at a regulator as shown in Figure 3. The distribution of CSO flows for any RTB falls into one of the following components: (a) Captured by the collection system and conveyed for treatment at the wastewater treatment plant or "intercepted"(not shown in Figure 3); (b) Captured by the storage volume of the RTB treatment units and any other additional storage only facilities and returned to the

interceptor for treatment at the WWTP; (c) Treated within the RTB treatment train and discharged to the receiving water; or, (d) Untreated CSO discharged to the receiving water.

The untreated CSO refers to flows not entering the RTB treatment train, i.e., diverted to a bypass channel provided for flows exceeding the peak design flow of the RTB. The volume of allowable untreated CSO is given by the CSO control objectives. For example, if the allowable bypass volume is 10%, then a CSO volumetric control level of 90%, based on the annual or seasonal time series, is required.

The sizing of the RTB then needs to use the annual flow time series to determine both the requirements of the CSO control objective; i.e., to meet the volumetric control target and to meet the surface overflow rate (SOR) requirements consistent with the CSO treatment objectives; i.e., the desired percentage removal and/or desired effluent concentration. The latter aspect is discussed in the next section which deals with the RTB treatment process.

3.3 Step 3 – Treatment Process

3.3.1 General Considerations

Retention treatment basins can be used as satellite facilities, stand-alone facilities at a WWTP, or integrated facilities at a WWTP. Figure 4 shows a satellite RTB with pre-treatment by screens, optional coagulant addition and disinfection within the basin. Figure 5 shows an alternative RTB configuration located at a WWTP. In this case the RTB is part of an integrated treatment train with common pre-treatment and disinfection. In both instances the RTB will serve as a storage facility to capture smaller overflow events with flow volumes smaller than the RTB volume or to capture portions of larger events.

RTBs typically consist of several compartments to allow smaller overflow events to be captured and/or treated without the utilization of the entire facility. Dividing the storage volume of the RTB into separate compartments also allows different portions of the tank to be used for other unit operations (e.g., disinfection). Smaller storm events and portions of larger events are captured within the storage volume afforded by a RTB. In this case, captured flows are transferred to a central wastewater treatment plant when capacity allows.

RTBs can be designed as simple gravity sedimentation basins or they can be augmented to enhance settling with coagulant addition or through inserts such as plate settlers. Positively buoyant materials are usually removed by some type of baffle or skimmer arrangement. Screens may be added to the RTB to ensure removal of positively buoyant and neutral density floatable materials. RTBs can also be employed as disinfection vessels usually through the addition of chlorine solution. Designs typically incorporate dechlorination as a final process step. Both chlorination and dechlorination require good mixing usually provided through a mixing device located in the RTB. It is also possible to add a disinfection step in a separate vessel following the RTB. In this case either chemical disinfection or disinfection by ultraviolet (UV) light irradiation can be considered.

3.3.2 CSO Quality Considerations

The next step in the RTB preliminary design is the characterization of CSOs to establish settling characteristics of solids and the concentrations of TSS, $CBOD_5$ and any other parameters of concern such as bacteria. If disinfection is required then appropriate

process parameters such as UV transmittance or chlorine demand should also be evaluated at this time.

It is recommended that CSO characterization should be based on data from 5 to 7 storm events. If coagulant addition and in-tank or add-on chlorination are considered likely adjuncts to the RTB then treatability testing should also be carried out at the same time. The treatability testing involves jar testing for coagulant selection and dosage and retention time determination for solids removal. The in-tank or add-on chlorination evaluation would require determination of the chlorine demand and the CT product (i.e., chlorine concentration x the contact time) to achieve the CSO treatment objective. If add-on UV disinfection is being considered, then UV treatability testing will also need to be carried out.

CSO characteristics required to evaluate process capability to meet "primary equivalent" treatment include TSS concentration (required to determine the RTB size needed to meet effluent target concentrations), total $CBOD_5$ concentration and its dissolved fraction (required to estimate the particulate $CBOD_5$ fraction that could be removed by settling), and settling characteristics of CSO solids in the form of a settling velocity distribution. Examples of CSO settling velocity distribution curves are shown in Figure 6.

The settling curves provide information about the design surface overflow rate (SOR) of the basin, which consequently determines the basin size and the dimensions. If the settling curves, characterization data and treatability data indicate that CSO treatment objectives will likely not be achieved, then consideration should be given to a RTB design with coagulant addition or to alternative technologies. The addition of coagulants, such as

alum or ferric chloride and/or polymers, can significantly increase SORs and correspondingly reduce RTB footprint and tankage requirements. Depending upon the nature of the particulates found in the CSOs, it may be necessary in any event to employ coagulant assisted settling to meet CSO treatment objectives.

Even though $CBOD_5$ removal requirements may be specified in CSO treatment objectives, RTBs are usually not designed on this basis. Rather, the CSO soluble and particulate $CBOD_5$ fractions are measured during the characterization phase of the process design and the overall removal of $CBOD_5$ is then estimated from predicted TSS removal efficiency and the soluble $CBOD_5$ fraction. Hence, the SOR may need to be adjusted to increase solids capture to effect the corresponding regulatory $CBOD_5$ removal.

The decision to employ in-tank chlorination and dechlorination adds yet another aspect to RTB sizing. In this case, the CT product required determines the necessary retention time of the RTB at peak design flow. The basin dimensions meeting this retention time need to be calculated and compared with dimensions determined from the SOR analysis. Finally, as noted above the RTB preliminary design also needs to meet the requirements of the CSO control objective(s) with respect to frequency, volumetric control or loading control. The basin should be sized for the largest of the three dimensions, depending on which control objective is the most critical.

3.3.3 RTB Sizing and Dimensioning

Specific criteria for RTB SOR and tank depth do not exist in North America. In contrast, Germany has had a standard for RTBs for some time, which specifies a fixed design SOR of 10 m/hr with a tank length-to-width ratio of at least two for rectangular

tanks. This standard has been applied in the design of thousands of CSO retention/treatment facilities ranging in size from 50 to 20,000 m^3.

More recently, RTB performance data with and without coagulant addition in CSO applications have been compiled from studies in the United States and Canada. For example, recent studies in the City of Windsor and the City of Toronto have demonstrated the feasibility of high SOR (>20 m/h) RTB operation using polymer addition as the coagulant (Li et al, 2003; Li et al., 2004; and Marsalek et al., 2003).

The North American results are summarized in Figure 7 (XCG 2004). This figure may be used to obtain an initial estimate of design SOR which should be then refined through modelling or pilot testing. A numerical simulation model such as the Storage/Treatment block of the Stormwater Management Model (SWMM) or GPS-X (Schraa *et al.*, 2003) can be used to conduct detailed evaluations of average RTB performance for plain settling. In addition, more complex computational fluid dynamics (CFD) modelling or physical modelling (He et al. 2004; Stovin and Saul 2000; Schmitt *et al.* 2002) can also be employed to finalize the RTB layout. The prediction of performance with coagulant addition will require piloting at range of dosage and SOR conditions

4. Location-Specific Factors

4.1 Siting

The need to find a good location for the satellite RTB facilities must balance siting in proximity to the overflow point with the availability of suitable property and community concerns. In virtually all cases satellite facilities are located close to a water body, in areas that are often among the most prized urban properties from an environmental viewpoint and

from the potential for recreation or development. A broad range of practical, social and technical factors need to be assessed and addressed in siting decisions. They include: community concerns; land availability; geotechnical suitability; site contamination; facility flood protection; facility environmental impact; access; and, utility availability. Additional details regarding each of these issues may be found in the CSO Technologies Manual (XCG 2004).

Siting at WWTP locations can be equally challenging primarily due to space limitations and the need to integrate the RTB with the existing processes. This aspect of RTB preliminary design is discussed in more detail in the next section.

4.2 Integration

Integration of RTB facilities refers to a range of technical issues associated with the linking of the facility to a satellite or WWTP location. Integration must consider the means of transporting flows, biosolids and other residues such as screenings into and out of the RTB facilities. Integration must also consider the hydraulic behaviour of the facility, addressing allowable head losses and any backwater conditions within the downstream sewers, processes or the receiving water. If inadequate hydraulic head is available, pumping needs to be added to the RTB facility. Integration, along with the siting issues, should be included in the CSO treatment selection process and any outstanding issues mitigated during design.

5. Operations and Maintenance (O&M) and Costs

The last step in the development of an RTB preliminary design is the consideration of O&M aspects and the development of preliminary cost estimates. The O&M aspects

include the RTB features needed for safe and efficient operation and the assessment of ongoing operational requirements such as power, labour and consumables, including coagulants. The detailing of O&M then provides the capability to finalize capital costs and to evaluate operating costs.

5.1. Operations and Maintenance

The municipality, in consultation with its design consultants and the equipment suppliers, needs to review the O&M requirements of a proposed treatment alternative. The O&M issues should be included as part of the alternative selection and the final design should facilitate as much as possible the ease of operation and maintenance. Depending upon the technology selected, municipal operations and maintenance capabilities may need to be enhanced. For example, the expertise to operate and maintain the mechanical-electrical facilities associated with CSO treatment including a chemical feed system may be presently limited within a given CSO municipality. It may be that neither the necessary manpower nor equipment is available.

Another important operational consideration is the rather large down time that all CSO facilities experience. For example, it was estimated that proposed CSO treatment facilities in Eastern Canada would operate from 90 to 200 hours per year (XCG 2004), spread over 17 to 20 overflow events. In order to ensure that systems are operational after lengthy idle periods, appropriate maintenance procedures need to be developed and routinely applied. Routine exercising of process equipment should be considered as part of this practice.

Specific O&M issues related to the operation of RTBs are system controls, odour control and ventilation, and the removal of accumulated solids. Additional details regarding each of these issues may be found in the CSO Technologies Manual (XCG 2004).

5.2 Costs

5.2.1 Design and Construction Costs

The cost of design and construction of RTBs and CSO storage facilities in general can be substantial. Some of the factors that influence the construction costs include location of the facility, groundwater and geotechnical conditions, requirement for facility cover, requirement for facility ventilation and odour control, requirement for facility cleaning, pumping requirements, as well as the basin size.

Walker et al. (1993) developed a capital cost curve for CSO storage tanks, based on studies that assembled information on CSO control costs, and included the construction costs of structures and associated equipment. Costs of pumping were included in some cases, while the costs for land acquisition and engineering were excluded. The capital cost curve is presented in Figure 8. Additional data presenting case study specific costs may be found in the CSO Technologies Manual (XCG 2004).

5.2.2 Operation and Maintenance Costs

Walker et al. (1993) also developed curves to estimate the annual O&M costs of RTBs for CSO control. These curves are shown in Figure 9 for different design flows. Additional data presenting case study specific costs may be found in the CSO Technologies Manual (XCG, 2004).

In addition to the specific capital and O&M costs, life cycle costs for the project should be developed and evaluated as part of the cost assessment.

6. Summary

A newly produced (2004) Combined Sewer Overflow Treatment Technologies Manual provides guidance for planning, preliminary design and implementation of CSO treatment. Towards this end, the manual addresses CSO abatement program planning, by focusing on program objectives reflecting regulatory requirements and addressing collection-treatment system impacts, and environmental, public health and community concerns. Following the establishment of planning objectives, guidance is provided for CSO treatment facility preliminary design, which encompasses such steps as development of CSO control and treatment objectives, design flows, treatment process trains, site-specific considerations, and costs. Such considerations were developed in more detail for CSO retention treatment basins (RTBs), which are commonly applied to control and treat CSOs in the Great Lakes municipalities. Well designed RTBs can meet the Ontario requirements for CSO pollution abatement and thereby contribute to the remedial action in the Great Lakes Areas of Concern.

Acknowledgements

The authors gratefully acknowledge the funding and in-kind contributions to this project by the City of Welland, The Regional Municipality of Niagara and The Great Lakes Sustainability Fund.

References

He C, Marsalek J, and Rochfort Q. 2004. Numerical modelling of enhancing suspended solids removal in a CSO facility. Water Qual. Res. J. Canada, this issue (in press).

Li JG, Dhanvantari D, Averill D, Biswas N. 2003. Windsor combined sewer overflow treatability with chemical coagulation. Water Qual. Res. J. Canada, 38: 317-334.

Li, JG, Horneck, H, Averill, D, McCorquodale, JA, Biswas, N. 2004. High rate retention treatment basins for CSO treatment. Water Qual. Res. J. Canada, this issue (in press).

Marsalek J, He C, Rochfort Q, Exall K, Wood J, Krishnappan BG, Seto P, Chessie P. 2003. Upgrading the North Toronto CSO storage and treatment facility. In: J Marsalek, D Sztruhar, M Giulianelli and B Urbonas (eds), Enhancing urban environment by environmental upgrading and restoration, workshop preprints. NATO Advanced Research Workshop, Rome, Italy, Nov. 5-8, 2003, 93-103.

Schmitt F, Milisic V and Chebbo G. 2002. Storage settling basins design and management. In: Proc. the 3rd Int. Conf. on Sewer processes and Networks, Paris, France, Apr. 15-17.

Schraa O, Gall B and Averill D. 2003. Development of a numerical simulation model of high-rate retention treatment basins used in CSO applications. Presented at the 38th Central Canadian Symp. on Water Quality Research, CCIW, Burlington, Ontario, Feb.10 & 11.

Stovin V and Saul AJ. 2000. Computational fluid dynamics and the design of sewage storage chamber. J. CIWEM, 14(2): 103-110.

Walker D, Golden J, Bingham D and Driscoll E. 1993 Manual of Combined Sewer Overflow Control. EPA report 625-R-93-007, US EPA, Cincinnati, Ohio.

Weatherbe DG and Sherbin IG. 1994. Urban Drainage Control Demonstration Program of Canada's Great Lakes Cleanup Fund, Water Science Technology, 29(1-2): 455-462.

USEPA. 1995. Combined Sewer Overflows Guidance For Long-Term Control Plan. EPA report 832-B-95-002, US EPA, Cincinnati, Ohio, September.

XCG Consultants Ltd. 2004. CSO Treatment Technologies Manual. In Press.

Figure 1 **CSO Abatement Program Phasing**

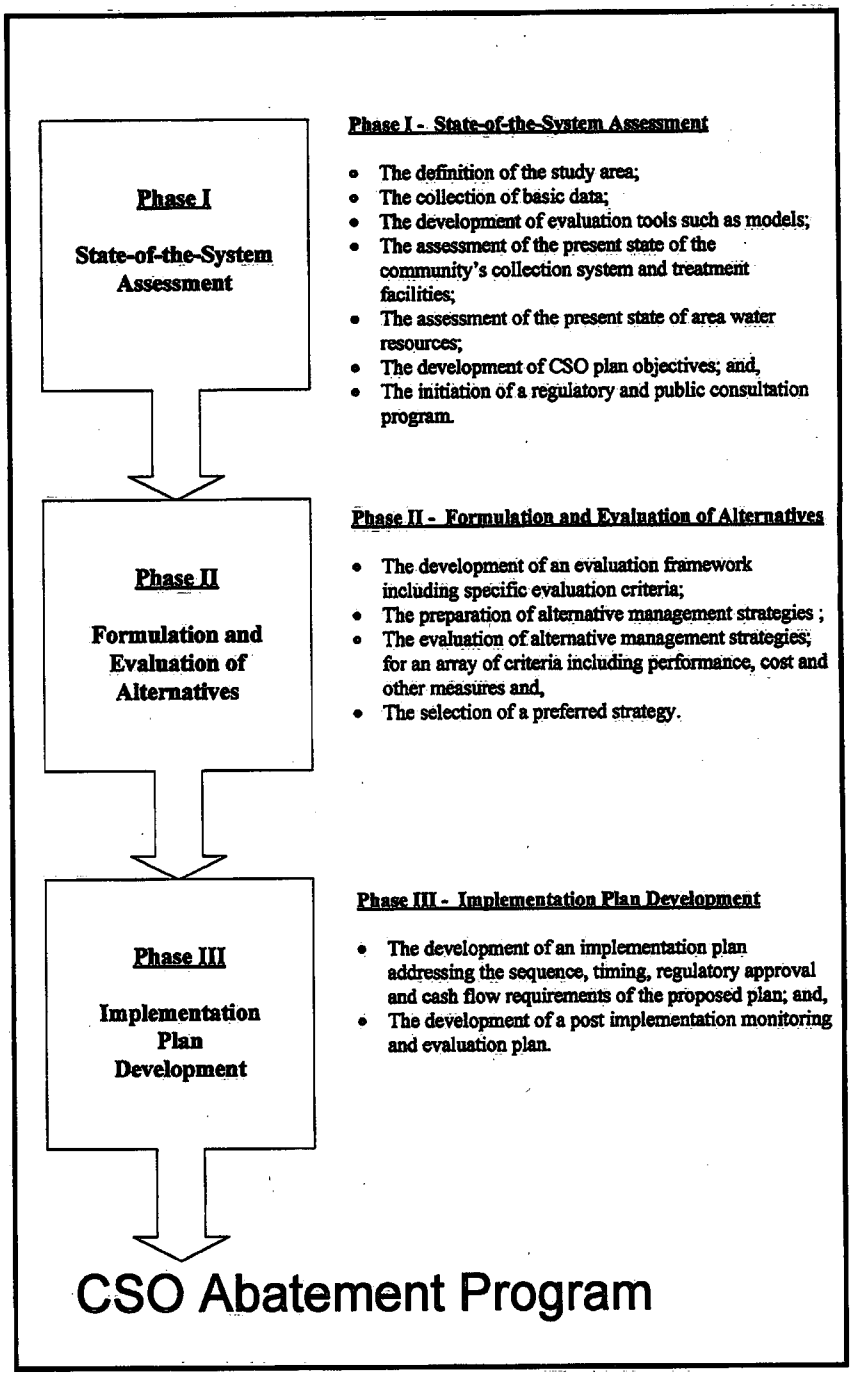

Figure 2 **Overview of Retention Treatment Basin Facility Preliminary Design**

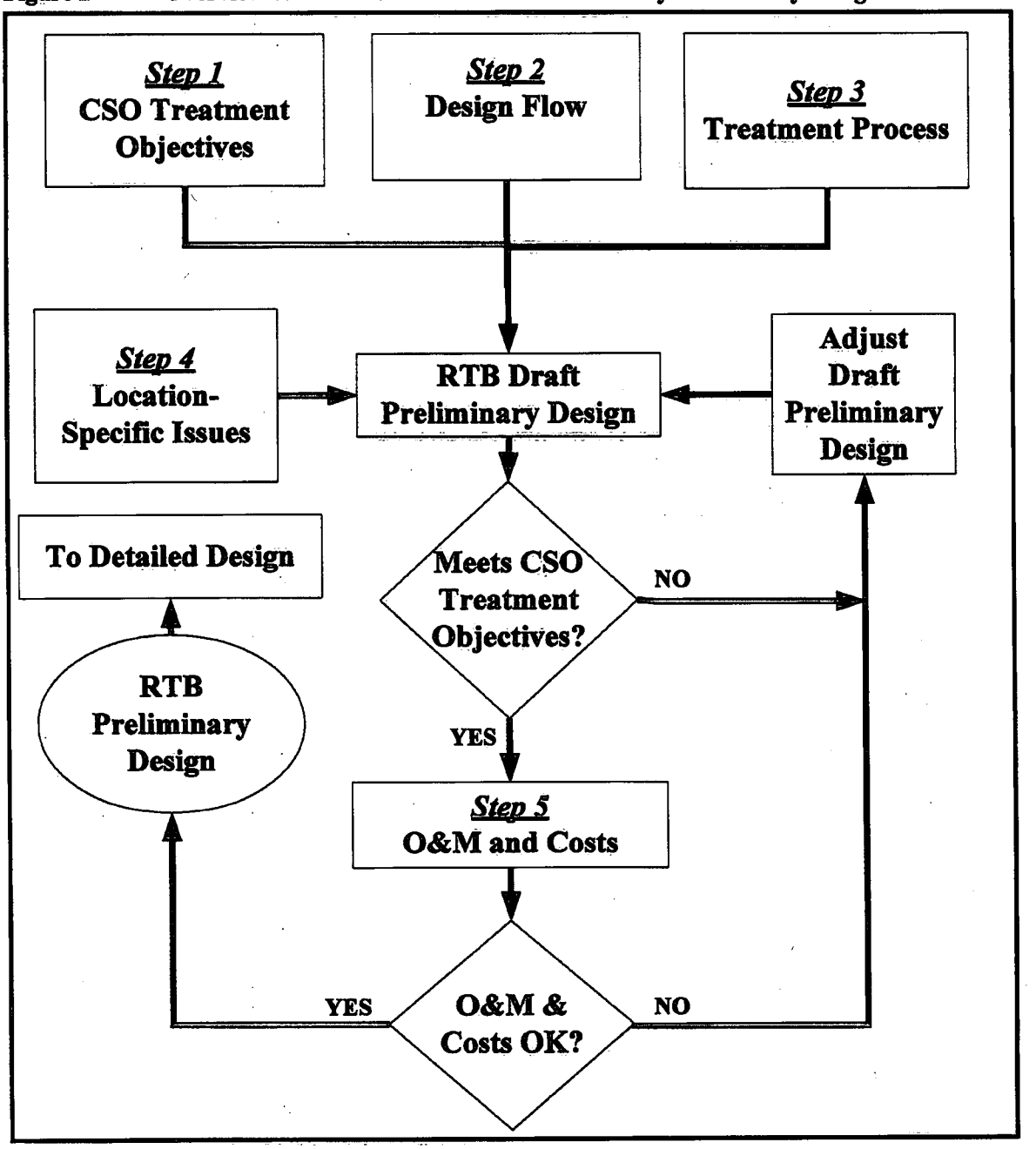

Figure 3 **CSO Hydrograph Distribution**

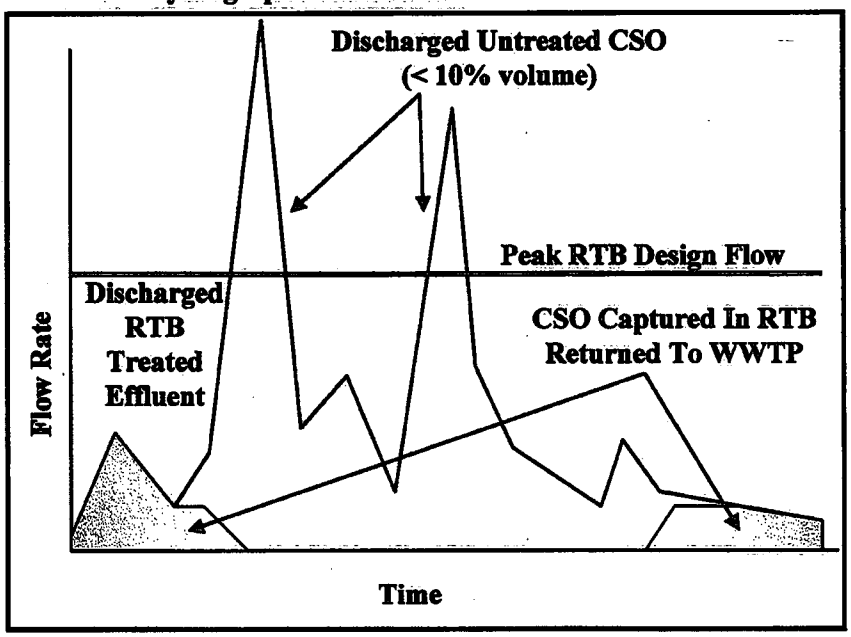

Figure 4 Satellite RTB Treatment Facility

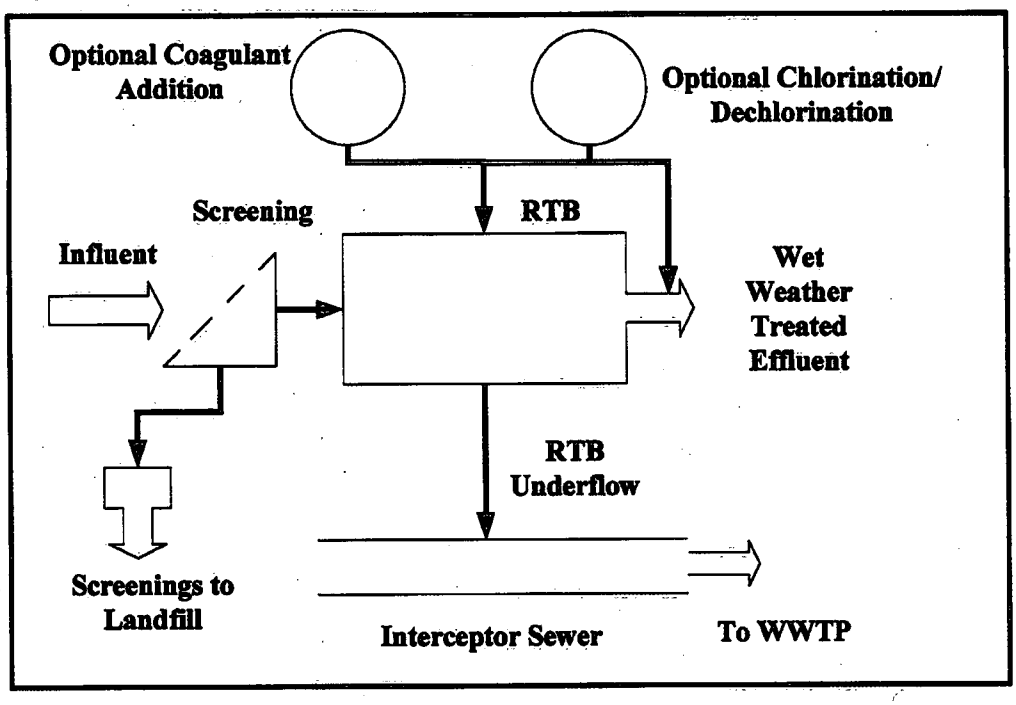

Figure 5 Integrated WWTP and RTB Treatment Facility

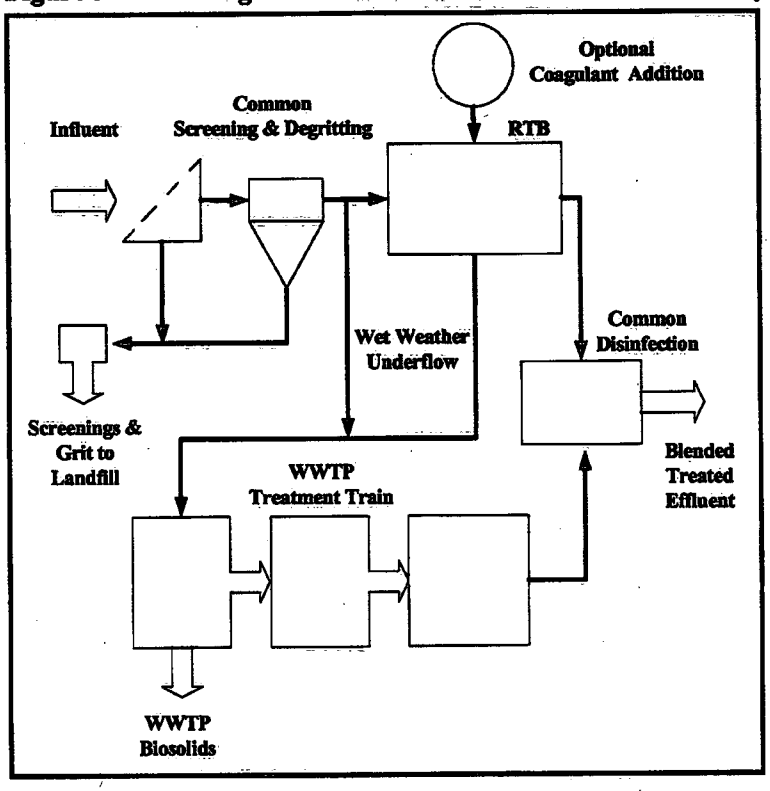

Figure 6 Select Ontario Particle Settling Velocity Distribution Curves

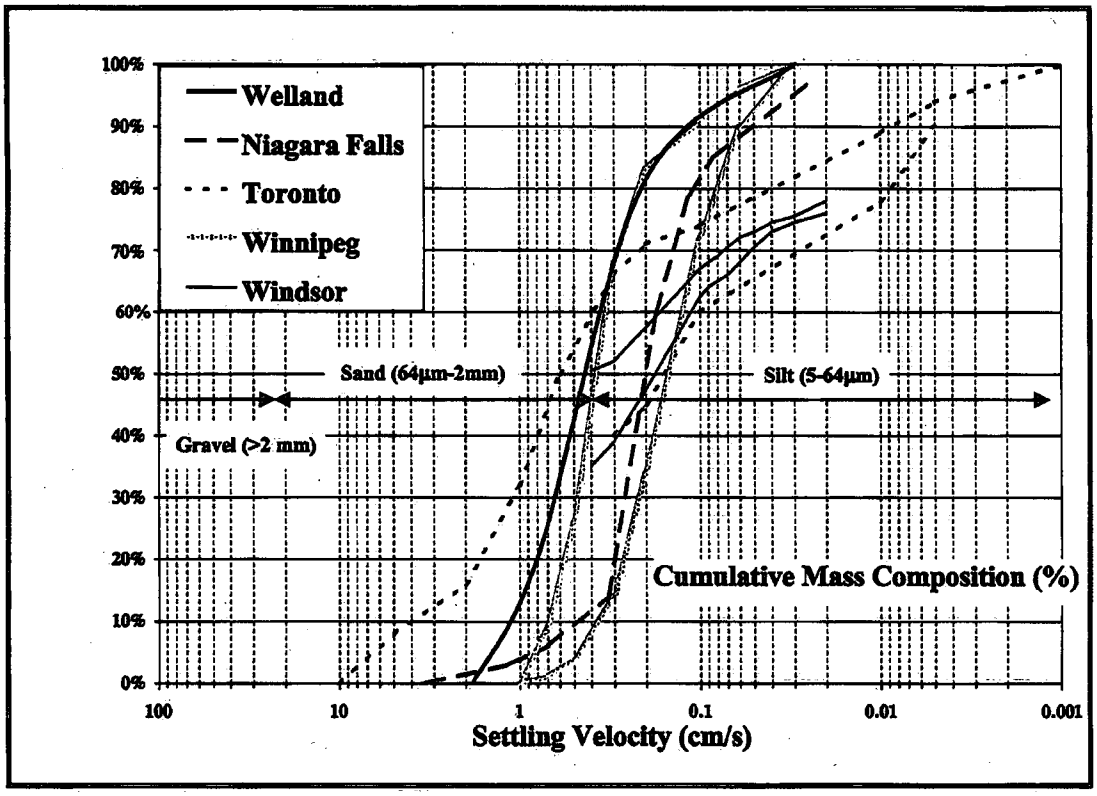

Figure 7 RTB Suspended Solids Removal Efficiency

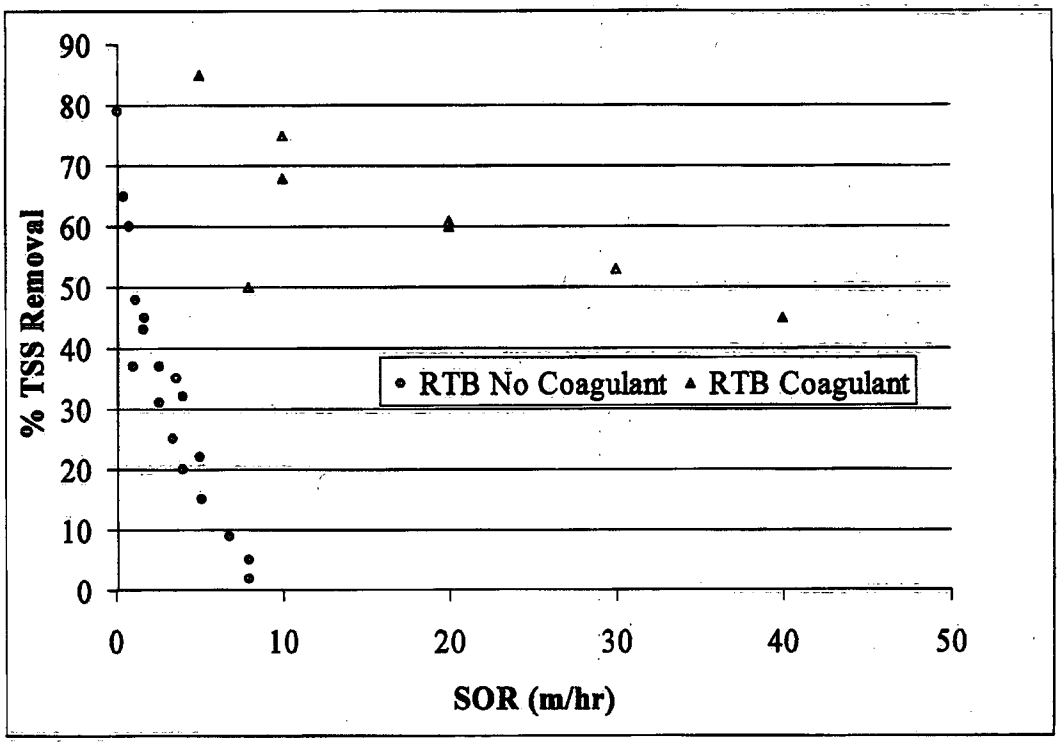

Figure 8 **RTB Capital Cost (ENR 4500) (Walker et al 1993)**

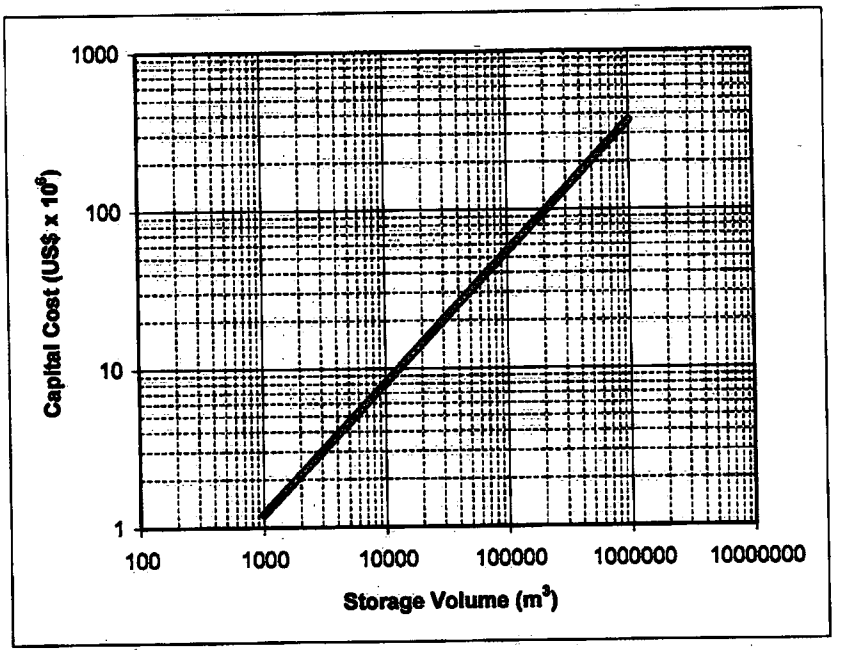

Figure 9 RTB O&M Costs (ENR 4500) (Walker et al 1993)

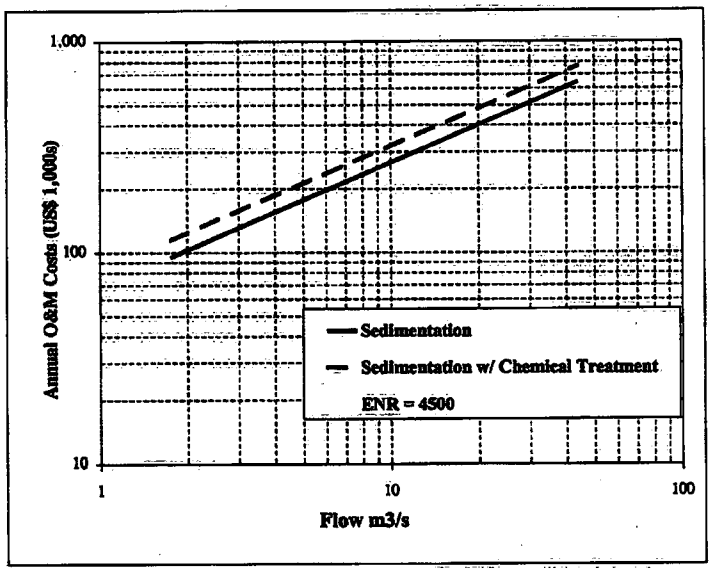

Environment Canada | Environnement Canada

Canada

Canada Centre for Inland Waters
P.O. Box 5050
867 Lakeshore Road
Burlington, Ontario
L7R 4A6 Canada

Centre canadien des eaux intérieures
Case postale 5050
867, chemin Lakeshore
Burlington (Ontario)
L7R 4A6 Canada

National Hydrology Research Centre
11 Innovation Boulevard
Saskatoon, Saskatchewan
S7N 3H5 Canada

Centre national de recherche en hydrologie
11, boul. Innovation
Saskatoon (Saskatchewan)
S7N 3H5 Canada

St. Lawrence Centre
105 McGill Street
Montreal, Quebec
H2Y 2E7 Canada

Centre Saint-Laurent
105, rue McGill
Montréal (Québec)
H2Y 2E7 Canada

Place Vincent Massey
351 St. Joseph Boulevard
Gatineau, Quebec
K1A 0H3 Canada

Place Vincent-Massey
351 boul. St-Joseph
Gatineau (Québec)
K1A 0H3 Canada