RRB 89-43

This manuscript has been prepared for

the IAHR Workshop on Instrumentation for Hydraulics Laboratories

and the contents are subject to change.

This copy is to provide information

prior to publication.

SETUP, PREPARATION, VELOCITY MEASUREMENT, AND DATA ACQUISITION FOR BUBBLE PLUMES IN A VACUUMED TANK

by

G. Tsang*, F. Wu**,
B. Trapp, and N.K. Madsen*

*National Water Research Institute
Canada Centre for Inland Waters
Burlington, Ontario, L7R 4A6

**Peking University
Beijing, China

June 1989
NWRI Contribution #89-141

ABSTRACT

In studying the behaviour of bubble plumes under laboratory conditions, to properly simulate the sizes and the expansion of the gas bubbles, a suitable surface tension of the ambient liquid should be obtained and the pressure at the surface should be appropriately maintained. While the former leads to the modification of the surface tension of the ambient liquid with surfactants, the latter means that the experiments on bubble plumes should be conducted in a vacuumed vessel. Both these requirements present additional problems to those that are encountered in order to satisfy other simulation criteria.

Experiments on bubble plume were conducted at National Water Research Institute during 1985/86 in a steel tank with glass windows. The tank was 1 m in diameter and 2 m high. During the experiments, the tank was partly filled with water and compressed nitrogen was released at the bottom from an orifice. The upper part of the tank was connected to a vacuum pump to maintain the desired vacuum. The surface tension of the water was reduced with surfactant. For measuring the velocity at different points of the flow field, a special apparatus that consisted of four miniature current meters and a manipulating mechanism was constructed. The output signals of the current meters in the form of electrical voltages were converted to digital readings through an A/D converter, and then were read directly into a micro-computer for later storage in floppy discs and analysis.

This paper reports the experimental setup and preparation, the velocity measuring apparatus, the data acquisition system, the modification of surface tension of the water with surfactant, the miniature current meters used and the effect of two-phase flow on calibration to share the experience gained with colleagues working in similar areas. Examples of the measurements are described and discussed.

RÉSUMÉ

Lors de l'étude du comportement des panaches de bulles en laboratoire, il importe d'obtenir une tension superficielle adéquate du liquide ambiant et de maintenir la pression appropriée à la surface afin de bien simuler la taille et l'expansion des bulles de gaz. Bien que le premier exercice modifie la tension superficielle du liquide ambiant avec les agents tensio-actifs, le deuxième signifie que les expériences sur les panaches de bulles doivent être menées dans un compartiment sous vide. Ces deux exigences présentent des problèmes additionnels en plus de ceux rencontrés lorsqu'on cherche à satisfaire les autres critères de simulation.

Les expériences sur panaches de bulles ont été faites à l'Institut national de recherche sur les eaux en 1985-1986 dans une cuve d'acier munie de hublots en verre. La cuve mesurait 1 m de diamètre sur 2 m de hauteur. Au cours des expériences, cette cuve était partiellement remplie d'eau, et de l'azote comprimé était introduit dans la cuve par un orifice qui se trouvait au fond. La partie supérieure de la cuve était branchée sur une pompe sous vide pour maintenir le vide désiré. La tension superficielle de l'eau était réduite à l'aide d'un agent tensio-actif. Un appareil spécial constitué de quatre courantomètres miniatures et d'un mécanisme de manipulation a été fabriqué afin de mesurer la vitesse à différents points du champ du courant. Les signaux des courantomètres sous forme de voltages électriques étaient couvertis en lecture numérique à

l'aide d'un convertisseur analogique-numérique, et ensuite lus directement dans un micro-ordinateur en vue de leur stockage et leur analyse ultérieure sur disque souple.

Le présent rapport donne un compte rendu de la mise au point et de la préparation de l'expérience, de l'appareil de mesure de la vitesse, du système d'acquisition des données, de la modification de la tension superficielle de l'eau à l'aide de l'agent tensio-actif, des courantomètres miniatures utilisés et de l'effet du débit biphasique sur l'étalonnage de façon à partager l'expérience acquise avec les collègues travaillant dans les mêmes domaines. Les exemples de mesure sont décrits et analysés.

MANAGEMENT PERSPECTIVE

Air bubble plumes have been used from aerating an aquarium tank to the mixing of water of different layers in a lake for thermal redistribution in ice control. The blow up of a subsea gas/oil wall also produces a bubble plume. Understanding the behaviour of bubble plumes will assist effective environment management.

Conducting bubble plume studies under laboratory conditions in scaled down models has the benefit of controlled ambient environment and lowest costs. Because of scaling laws, the model studies should be conducted in partial vacuum and the surface tension of the ambient liquid should be modified with surfactants.

The report describes such laboratory studies. The experimental setup, procedure and instrumentation were unique and the first of their kind. The experiences may be used by engineers, researchers and environment managers.

PERSPECTIVE-GESTION

Des panaches de bulles d'air ont été utilisés pour aérer l'eau d'un aquarium et mélanger l'eau des différentes couches d'un lac en vue de la redistribution thermique au cours d'expériences de contrôle de l'englacement. Le soufflage d'une paroi sous-marine de gaz/pétrole produit également un panache de bulles. La connaissance du comportement des panaches de bulles permettrait une meilleure gestion de l'environnement.

Les études de panaches de bulles en laboratoire, avec des modèles réduits, ont l'avantage de pouvoir se faire en milieu ambiant contrôlé et à bon marché. Étant donné les lois de la similitude, les études sur modèles doivent être faites dans un vide partiel et la tension supervicielle du liquide ambiant doit être modifiée à l'aide d'agents tensio-actifs.

Le rapport décrit ce genre d'étude en laboratoire. Le dispositif, le procédé et l'instrumentation de cette expérience étaient uniques, et ils étaient les premiers du genre. Ces expériences peuvent être utilisées par des ingénieurs, des chercheurs et des gestionnaires de l'environnement.

Introduction

The continued release of a fluid from a source into an immiscible ambient fluid produces a bubble plume. The air bubbler in a fish tank, the air bubbler wave breakers, the air bubbler used in ice control, and the blowout of a subsea gas well are all examples of gas-in-liquid bubble plumes.

Although the characteristics of gas-in-liquid bubble plumes can be studied in the field in full scale such as the investigations conducted by Bulson (1961), Kobus (1968), Topham (1975) and Milgram (1983), it will be much better to study the problem under laboratory conditions where the parameters can be systematically controlled. Implicitly, when studying the plume characteristics under laboratory conditions, only scaled model of the plume will be studied because of the lower cost.

To dynamically simulate a prototype plume in the laboratory, Tsang (1984) showed that not only the buoyancy flux and the depth should be appropriately scaled, the sizes and the expansion of the gas bubbles should be suitably simulated also. While the size of the gas bubbles is controlled by the interfacial tension between the gas and the liquid, the expansion of the gas bubbles is controlled by the ambient pressure experienced by the bubbles on their way up. By adding surfactants to the ambient liquid, the surface tension of the ambient liquid can be reduced and by which the bubble sizes are controlled. To control the expansion of the gas bubbles, the pressure exerted on the free surface of the ambient liquid may be varied. In other words, the laboratory study may be conducted in partial vacuum.

Because of economic reasons, water is the common ambient liquid used in laboratory bubble plume studies. The boiling of water at low surface pressure places a limit to the vacuum that may be used and consequently the largest scale ratio obtainable. Tsang showed that at a water temperature of 15°C, the maximum scale ratio possible is 1/60. At a water temperature of 30°C, the maximum scale ratio possible becomes 1/15.

A greater limitation is imposed by the interfacial tension. The surface tension of most commonly used liquids falls in the narrow range of 10-100 dyne/cm (0.01-0.1 N/m). At room temperature, the surface tension of water is about 73 dyne/cm (0.073 N/m). If a surfactant is found which can lower this surface tension to 1 percent of its original value, then the maximum scale ratio possible will be 1/10. Since such a surfactant presently does not exist and the best surfactants available in the market can only economically reduce the surface tension of water to about 20 dyne/cm (0.020 N/m), the maximum scale ratio obtainable thus is about 1/2. This means that for most laboratory studies, the Weber law has to be violated.

Although a number of studies (See Burgess, 1981, for example) have been conducted to study the behaviour of air bubble plumes under laboratory conditions, the simulation of the sizes and expansion of the gas bubbles have not been included in the published literature; the simulation of buoyancy influx was considered to be the only predominant parameter. To study the scale effects of not simulating the expansion and the sizes of the gas bubbles, a series of experiments were conducted in 1985/86 (Tsang and Wu, 1989). In these experiments, the ambient pressure in the water was controlled by the vacuum on the free surface and the surface tension of the water was controlled by adding surfactant to the water. Because of the novelty of the experiments, the experimental setup, preparation and the measurement of velocity will be reported in this paper. The analog to digital conversion and recording of the measured data are also included for the completeness of data acquisition.

Experimental Setup

Fig. 1 is a photograph showing the main pieces and the general setup of the experiments. The bubble plumes were produced in the steel tank shown in the centre. The tank was 2 m high and 1 m in diameter. It was designed to stand complete vacuum. There were three windows on the tank, two on the sides and one in the front. By shining light through the two side windows, the behaviour of the bubble plume in the central plane of the tank could be observed from the front window.

To produce a bubble plume, the tank was first filled with water to the desired depth, then compressed nitrogen was released through an orifice on the bottom in the centre. The orifice plate actually contained three orifice holes of 1.8, 5.0 and 8.3 mm in diameter, and the release of nitrogen could be made through any of them. Since, according to Topham (1975), the characteristics of a bubble plume is not significantly affected by the size of the source orifice, only the smallest orifice was used in the experiments.

A removable, air-tight cover was constructed to cover the tank. A bushing was fixed to the centre of the cover through which a mast supporting the velocity measuring mechanism slid. The air-tightness between the mast and the bushing was obtained by imbedding seals in the bushing. To support the mast, four posts with top bracings were welded to the cover. The mast assembly was hung from the top bracing through a winch-pulley system. While the mast could be raised by the winch, the downward movement was induced by the sliding down of the mast in the bushing under its own weight. Fig. 2a is a perspective drawing of the cover-mast assembly installed to the tank and Fig. 2b is a photograph of the tank completed with the installed cover and mast. It is seen from Fig. 2a that one post was used to guide the movement of the mast. With such a guiding system, the orientation of the current meters carrying arm (see Fig. 2a) would be maintained. More will be said of the velocity measuring system later in the paper.

The vacuum and gas flow systems and their controls are shown in Fig. 3. A Sargent-Welch model 1402 two-stage vacuum pump driven by a 1/2HP motor was used in the vacuum system and connected to the cover of the tank through a 5/8 inch (16 mm) inside diameter hose. An O-ring provided the seal between the tank and the cover. Before an experiment and the running of the vacuum pump, the cover was clamped to the trunk. Following the starting of the vacuum pump and after sufficient vacuum has been established, the differential pressure between the atmosphere and the tank would be enough to push down the cover and maintain the seal; the removal of the clamps then would not affect the vacuum condition of the system. For the experiments, the vacuum pump was always run at full capacity. The desired vacuum was obtained by adjusting the two control valves on the tank cover. The pressure in the tank was shown by two indicators; a mechanical Marsh Vaccum Gauge and a Paro Scientific pressure transducer (Model 223AT) computer/display (Model 700) package. The latter consisted of a crystal sensor whose vibrations were affected by the pressure sensed. A computer converted the output signals from the crystal sensor into digital form, and an LED display showed the final pressure. The Marsh vacuum gauge was for coarse reading of the vacuum and was used in conjunction with the coarse vacuum control

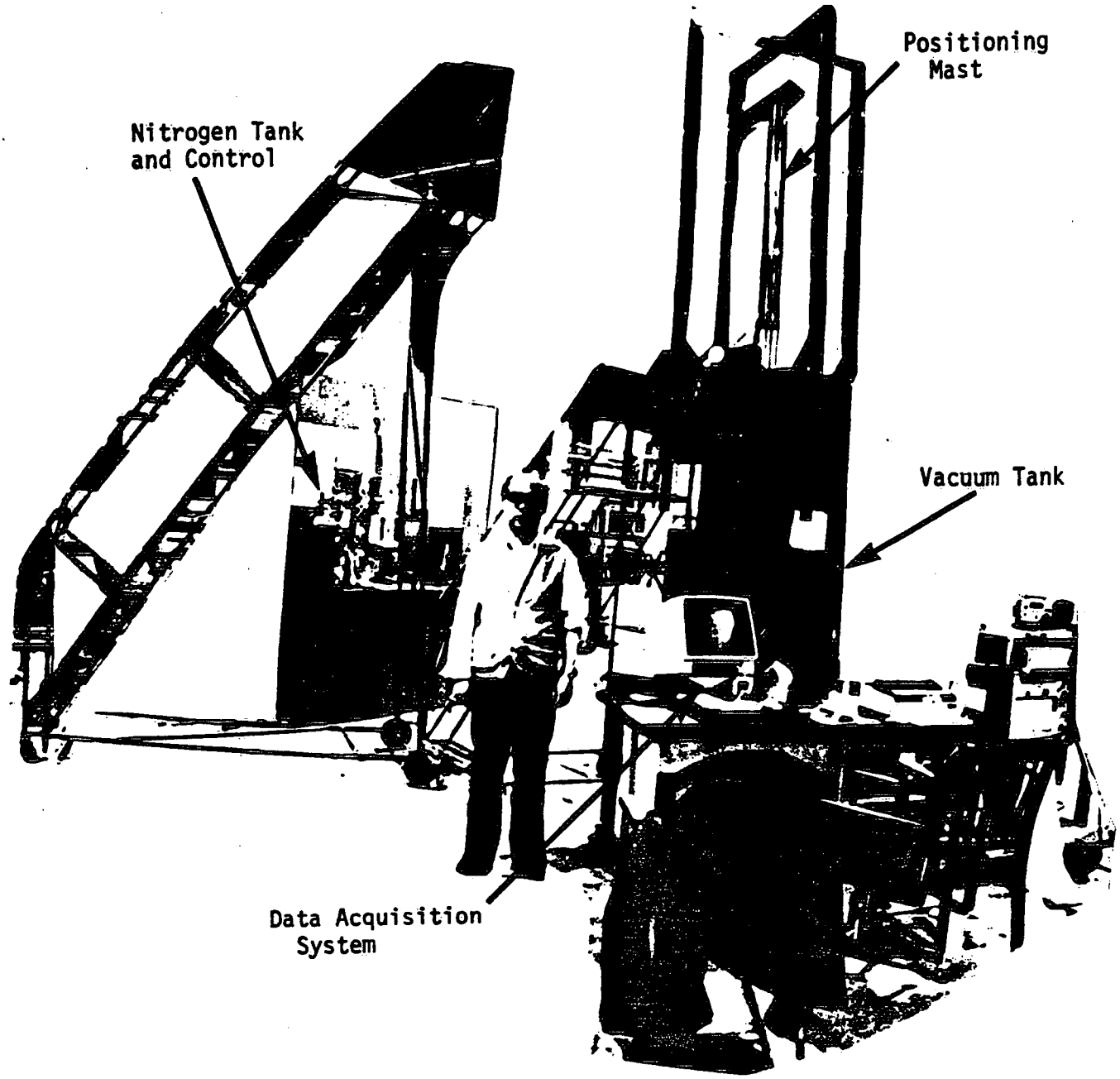

Fig. 1 Experimental Setup.

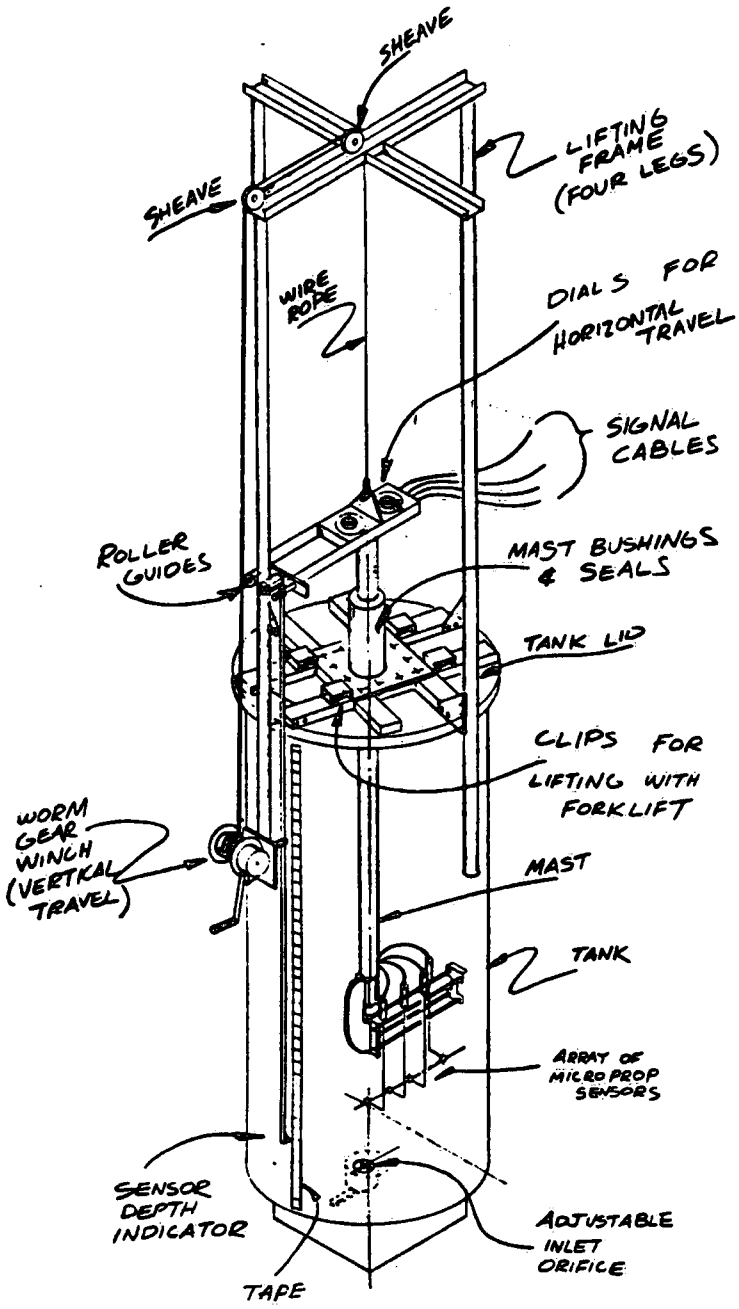

(a)

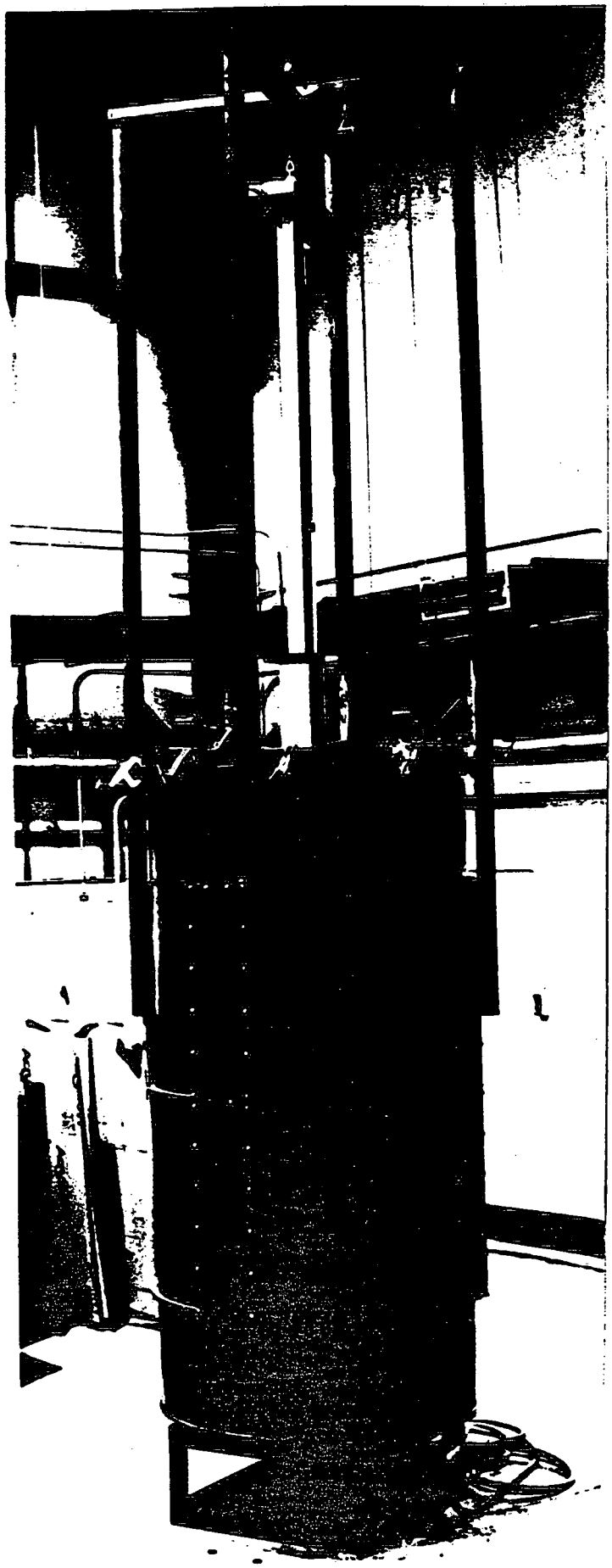

(b)

Fig. 2 Bubble Plume Tank Completed with Cover

valve. The fine vacuum control needle valve, on the other hand, was used in conjunction with the Paro Scientific pressure transducer-computer, which had an accuracy of 0.01 kPa. For a full running vacuum pump, the pressure in the tank was affected both by the air passing through the two control valves and the gas emitted at the source. The adjustments of the fine vacuum control needle valve and the rate of nitrogen inflow into the tank therefore should be manipulated simultaneously for obtaining the desirable pressure in the tank. For the planned experiments, the lowest pressure was 15 kPa and the maximum rate of plume gas inflow was 69.0×10^{-4} m^3/s (1.82 m^3/hr). Although the specifications of the vacuum pump said that such requirements were within its performance limits, actual experience showed that these two requirements could not be simultaneously satisfied. To compromise, the ranges of the parametric conditions of the experiments were suitably reduced.

As shown in Fig. 3, liquid nitrogen was used as the source of plume gas. A two-stage regulator installed at the outlet of the nitrogen bottle provided a constant nitrogen pressure at the outlet. A needle control valve and a Matheson Model 605 rotameter in the gas flow line provided the mechanism to obtain the desired flow rate. A rating curve provided by the manufacturer of the flow meter which relates the position of the ball float in the rotameter and the rate of discharge for nitrogen was used in monitoring the flow. The accuracy of the rating curve was within 3-5%.

Apparatus for Velocity Measurement

The chief parameter to be measured in the study was the velocity of the flow. The major problem to overcome in measuring the velocities in the field was how to manipulate the current meters in a vacuum system without upsetting the vacuum conditions. To this end, a mechanism shown in the conceptual diagram in Fig. 4 was devised. The external appearance of this mechanism is also shown in Fig. 2a.

It is seen from Fig. 4 that a group of three current meters for measuring the vertical velocities were mounted on a plate (Plate A) which itself was affixed to a multiple chain (Chain A). The chain was driven by turning a dial (dial A) on top of the mast through a stem (Stem A) and the sprocket at the end of it. The stem was properly sealed to ensure air tightness. Another current meter, intended to measure the radial flow, was mounted on another monitoring plate (plate B). The chain (Chain B) on which the mounting plate was affixed to was longer than the other chain to permit measuring the radial velocity past the central point. An additional chain/sprocket drive was used to permit the movement of the radial flow meter to pass beyond the centre line.

The whole current meter assembly moved up or down with the mast as a whole. The seals used between the mast and the bushing ensured air tightness. With such a mechanism, the velocity at any point in the tank could be measured. According to the shown conceptual design, an actual velocity-measuring mechanism was designed and constructed. More about the actual construction of the mechanism can be found in a report by Watson and Madsen (1984).

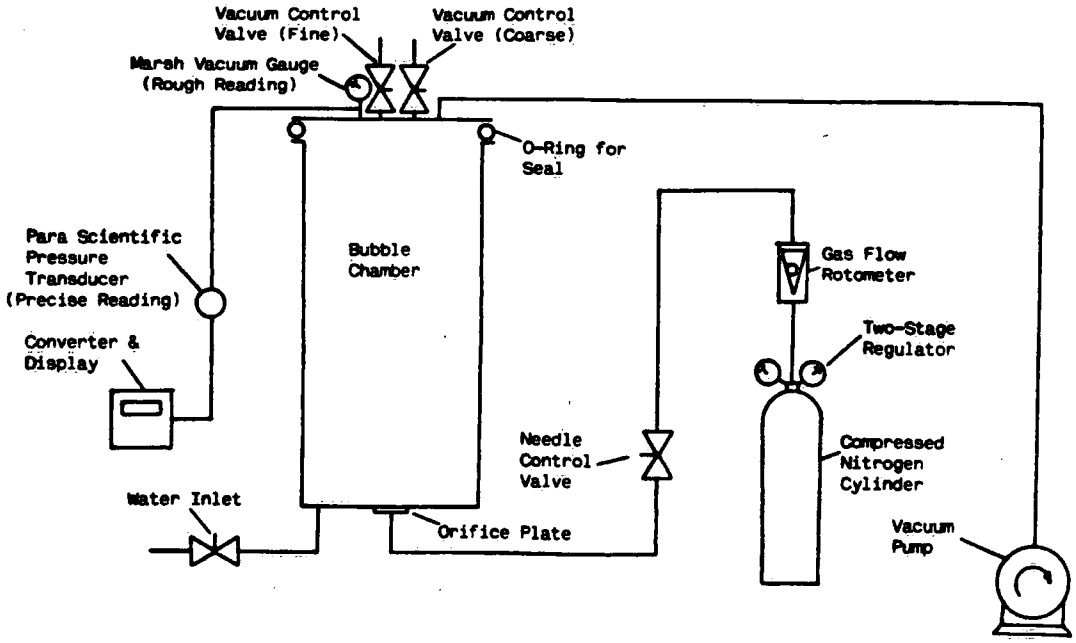

Fig. 3 Vacuum and Gas Flow Systems.

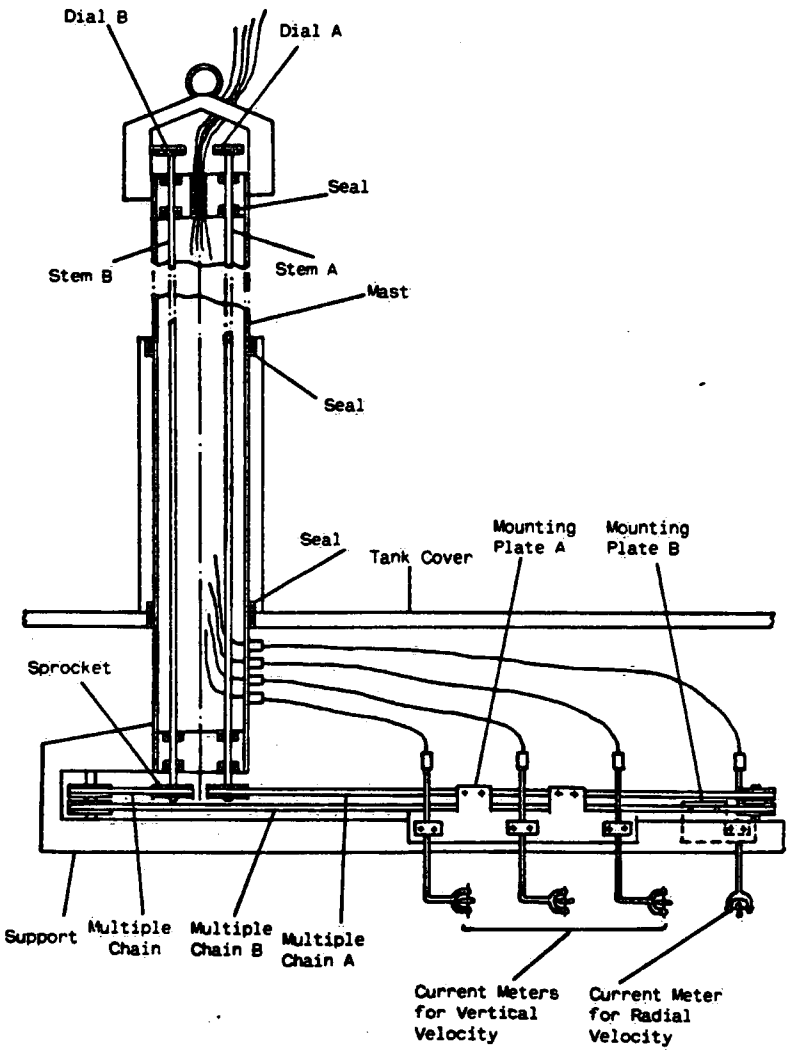

Fig. 4 Conceptual Design of Velocity Measuring Mechanism.

During the preliminary experiments, it was found that although the fourth current meter was intended to measure the radial velocity, in the two-phase flow, it was greatly affected by the vertical motion of the gas bubbles, so much so that little meaning could be interpreted from the measurement. It was thus decided to abandon the measurement of the radial velocity and current meter 4 was removed from the mounting plate B. In its place, current meter 3 was installed. Such a rearrangement permitted more measurements to be made near the central region of the tank where the velocity was high and the plume effect strong. More will be said of the behaviour of a current meter in a gas-liquid two-phase flow later in the paper.

Propeller type Novar miniature current meters (by Nixon Inst., England) were used in the experiments. The current meters had bi-directional responses. Each meter consisted of a probe and an electronic box. The diameter of the impeller of the probe was about 1 cm. The probe was so designed that for each revolution of the rotor, an electrical pulse was generated. The electronic box converted the pulse counts into a DC current. The 0-200 mA current could either be made to respond to the 0-3,000 rpm or the 0-18,000 rpm range by properly switching a selection switch. The current output was in turn converted to a voltage output by passing the current through a resistor of known resistance. The voltage output was used in the plume experiments as the velocity signal. Prior to the experiments, the current meters (1, 2 and 3) were calibrated in a towing tank for both the rpm ranges.

The Novar meter probes were very delicate. Impurities, particularly hairs and fibres in the water would easily foul the motion of the rotor. To ensure clean water, the water to the tank was filtered through a 200 micro cartridge filter. Prior to an experiment, of course, the tank would be thoroughly cleansed.

A cylindrical coordinate with the axis passing through the orifice and the zero height plane coincident with the undersurface of the cover was used as the reference frame for velocity measurement. The three current meters were so aligned that they were along a radial line. Such an alignment was maintained even when the meters were moved by turning the dials on top of the mast. When placing the cover, to ensure that this radial line passed the axis of the coordinate, a meter (usually meter 1) was brought to the centre line of the mast and then a laser and a theodolite were used to guide the placing of the cover until the current meter was at the axis of the cylindrical coordinate. From the initial dial readings and the initial separations among the meters, the subsequent positions of all the meters could be easily calculated.

The vertical positions of the current meters could be calculated from the position of the Sensor Depth Indicator (see Fig. 2a) which was fixed to the top of the mast and moved up and down with the mast against a tape that was fixed to the wall of the tank.

Data Acquisition, Handling and Analysis

Fig. 5 is a diagram showing the acquisition, handling and analysis of the velocity data. It is seen from Fig. 5 that the 0-200 mA output currents that indicated the velocities measured by the three current meters were first passed

through three resistances to change the current outputs into voltage outputs. The resistors were so selected that the voltage outputs were in the 0-10 V range to match the input range of 0-10V of the analog/digital converter. The 0-10V input range of the A/D converter was covered by 4096 increments, giving a resolution of the digital reading of 2.44 mV.

To fully utilize the input range of the A/D converter, different resistances were used for the same current meter to cover different velocity ranges so that the output voltage of the current meter could occupy the 0-10V range as fully as possible. These different resistors were calibrated together with the current meter in the towing tank as a unit. The calibrations produced velocity/voltage relationships which were approximately linear. Based on the calibration data, linear regressions were made using the least square method to produce the linear relationships. The slopes of these linear equations and the resistors used were among the important parameters that had to be noted down. For very small velocity ranges, however, the full 0-10V range could not be practically obtained because to produce the voltage drop, a rather large resistance R is needed. The power consumed by this resistor, I^2R, would then be too large for the electronics of the current meter to supply.

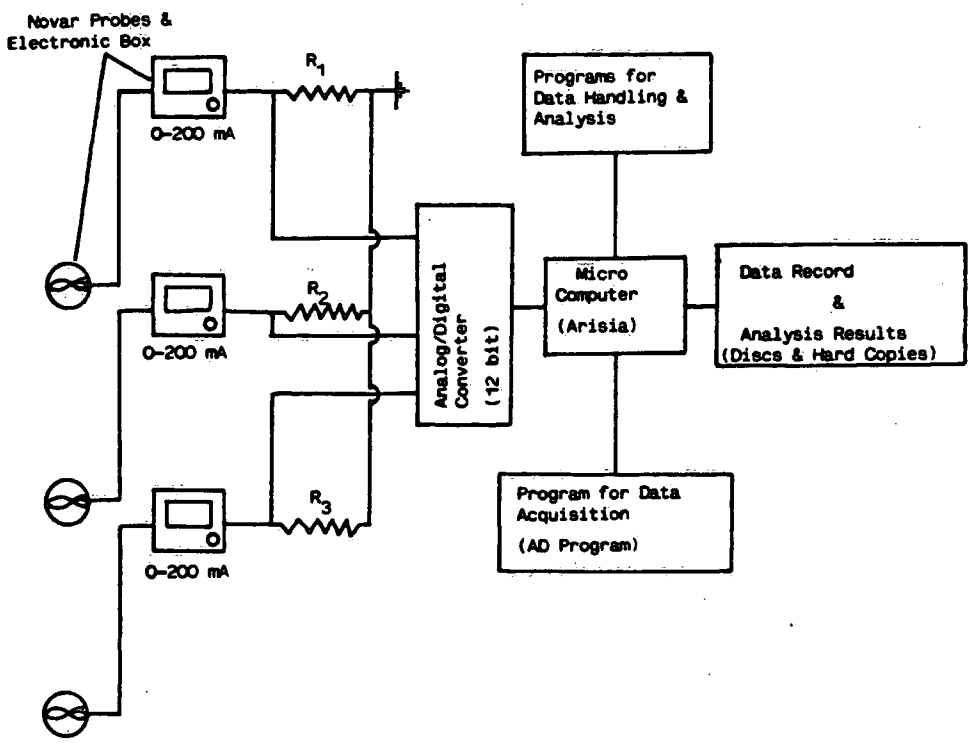

Fig. 5 Data Acquisition, Handling and Analysis

A data logging program (AD program) was written to sample the digital output of the current meters after A/D conversion and to store the data properly. The computer used was an Arisia microcomputer. The program directed the computer to scan the outputs of the current meters in the 1-2-3 order. The interval between scans were 250 ms and 1000 scans or readings were made for each current meter.

The time span between scans of successive current meters was only 1 ms for the same reading. Scanning of meters 1, 2 and 3 for the same reading, thus could be considered as being made simultaneously. To accommodate each set of readings, 250 seconds were needed. The velocity data files, each consisted of 3000 readings, subgrouped into 3 sets of 1000 readings each for each current meter, were recorded on 8 inch floppy discs. Each disc could store up to 60 files. All the files stored on a disc could be reloaded onto the computer later for data reduction and analysis.

Surface Tension Preparation of Experiments

As mentioned earlier, that to appropriately simulate the bubble sizes, the Weber law of simulation had to be observed. This meant modifying the surface tension of the water in the tank with surfactants.

An extensive search was made to find a suitable surfactant which led to the choice of FC-129, a surfactant manufactured by 3M as the surfactant used in the experiments. FC-129 was a fluorochemical containg butoxyethanol and ethanol, which are harmful when inhaled or contacting the skin. This surfactant should be handled in well ventilated areas.

To guide the preparation of the experimental ambient water, a rating curve was first developed which showed the surface tension of the water at different surfactant concentrations. The surface tension was measured with two tensiometers for cross-reference. The first tensiometer was a Fisher Scientific Model 21 surface tension mat. It consisted of a platinum-Iridium ring of known dimensions suspended from an arm of a balance and placed on the water surface. The balance was of the torsion type. Increasing the torque would increase the force on the balance's arm and raise the ring off the water surface. A film of liquid, however, was carried by the ring. From the force that was needed to counteract the downpull of the film, the surface tension of the liquid could be calculated. To ensure good measurement, the ring was decontaminated in a non-carbonizing flame before each measurement.

The other tensiometer was the Aller-Smith Rosano surface tensiometer. It consisted of a precision balance and a wettable blade. The blade was first immersed in the water and then slowly raised. The tension on the blade when it was being pulled gave the surface tension of the water. Prior to each measurement, the liquid surface was adjusted to be level and the blade was decontaminated in a non-carbon flame.

After the rating curve was established, the required quantity of the surfactant was determined from it knowing the volume of water. After adding the surfactant to the water and agitation, a sample of the water was tested to confirm the calculated prediction and to guide further minor adjustments.

Conventional Current Meters in Measuring Velocity in a Bubble Plume

While a gas bubble plume is a two-phase flow, the current meters used to measure the flow velocity were conventional current meters meant for single phase flows and were in fact calibrated in a single phase flow. The reasons for using the

conventional current meters were first of all that to the authors' knowledge, no current meters were available at the time of the experiments that could measure a two-phase flow, and secondly, that in all previous experiments reported in the literature, conventional current meters were used for velocity measurements. By using similar current meters in the experiments of this study, the measured velocities might be compared with those obtained earlier by other researchers.

When a current meter is placed in a flow, the blades of the rotor will be subject to a drag force and a lift force. It is the lift force that causes the rotor to rotate. Treating the rotor as a whole, the movement that turns it is given by:

$$M_c = \eta^* r \left(C_L \rho A \frac{v^2}{2}\right) \tag{1}$$

where C_L is the lift coefficient for the blades as a bulk, ρ is the density of the fluid, A is the projected area of the rotor to the flow, v is the flow velocity, r is the radius of the blades and η^* is a coefficient describing the distribution of the lift force along the blades. Conventional current meters, including the Novar meter, are so designed that the rotor will rotat at a rate that is proportional to the square root of M_c, or

$$(\text{rpm}) = \eta \sqrt{\frac{C_L A \eta^* r}{2}}\, \rho^{1/2} \tag{2}$$

where η is a constant depending on the design. Absorbing $\sqrt{\frac{C_L A \eta^* r}{2}}$ into η, the above equation is changed to

$$(\text{rpm}) = \eta\, \rho^{1/2}\, v \tag{3}$$

The above equation is for an instant. Over a period of time T, it can be written as

$$(\overline{\text{rpm}}) = \eta\, \rho^{1/2}\, \bar{v} \tag{4}$$

where the bar means the mean value over T. Eq. 4 is commonly used in stream metering.

When the current meter is used to measure water flow, Eq. 4 will be in the form of

$$(\overline{\text{rpm}})_w = \eta_w\, \rho_w^{1/2}\, \bar{v}_w \tag{5}$$

where the subscript w indicates water. When the same current meter is used to measure the plume flow, Eq. 4 will have the following form:

$$(\overline{rpm})_m = \eta_m \rho_m^{1/2} \bar{v}_m \tag{6}$$

where the subscript m indicates the mixed fluid of water and gas. From Eqs. 5 and 6, one sees that for the same rpm of the rotor, the flow velocity $\bar{v}_w$ and $\bar{v}_m$ are related by

$$\bar{v}_m = \left(\frac{\rho_w}{\rho_m}\right)^{1/2} \bar{v}_w = \left(\frac{\rho_w}{\rho_w - \Delta\rho}\right)^{1/2} \bar{v}_w = (1 - \delta)^{-1/2} \bar{v}_w \tag{7}$$

where $\Delta\rho = \rho_w - \rho_m$ and $\delta = \Delta\rho/\rho_w$. In writing the above equation, the approximation that $\eta_w = \eta_m$ has been used. The above equation shows that the calibration curve of the current meter should be corrected with the factor $(1-\delta)^{-1/2}$ if it is to be used to measure the plume flow. The evaluation of δ requires the knowledge of gas/water ratio of the plume at a point, i.e., gas concentration.

In all the previous studies, the velocities measured were not corrected. This means that $\bar{v}_m \simeq \bar{v}_w$ has been assumed. Such an assumption is only valid when the plume is weak so that $\rho_w \simeq \rho_m$. For strong plumes, especially near the centre line, where the gas presence is high, such an assumption may introduce large errors.

The mean plume velocity at a point may also be obtained from

$$\bar{v}_m = \frac{1}{T} \cdot \frac{1}{\eta} \left\{ \int_{T_g} \frac{(rpm)_g}{\rho_g^{1/2}} dT + \int_{T_w} \frac{(rpm)_w}{\rho_w^{1/2}} dT \right\} \tag{8}$$

where T_g is the total time that the probe is exposed to gas, T_w is the total time that the probe is exposed to water and $T_g + T_w = T$. The subscript g indicates gas flow. According to the above equations, one sees that if the presence of gas can be measured simultaneously during velocity measurement, $\bar{v}_m$ can be evaluated also.

During the experiments, it was observed that in strong bubble streams, the rotor would rotate faster when a gas bubble passed the probe than when water passed it. This means that desipte the small density of the gas, the bubbles possessed greater momentum than the surrounding water. In other words, the velocity of the bubbles should be much greater than that of the surrounding water. This was actually to be expected near the source because after all, it was the bubbles that impart momentum to the water and cause the plume motion. After rising for some distance and the breaking down of the bubbles, however, it should be expected that the presence of gas bubbles would lead to slower motion of the rotor.

Following the above discussions, one should expect to see greater velocity fluctuation at points where the presence of gas bubbles was great. Such points would be near the centre line of the plume. At points away from the axis where

the presence of gas bubbles was small, a less varied velocity recording should be expected. Similarly, one should expect greater velocity variations in a strong plume and less varied velocities in a weak plume, other conditions being the same.

As mentioned earlier, the Novar current meters had bi-directional response. This means that the motion of the rotor not only was affected by the flow perpendicular to it, but by the velocity in the plane of the rotor also. For the current meters measuring the vertical velocity, the lateral velocity was low so its effect on the rotors was only secondary. For the current that was originally intended for measuring the radial velocity (current meter 4), the motion of the fluid in the plane of the rotor caused by the rising bubbles overpowered the radial motion of the fluid that was perpendicular to the rotor, which rendered the measurement of the latter meaningless. It was for this reason that current meter 4 was removed. Some other means, therefore, has yet to be developed to directly measure the radial velocity in a gas bubble plume.

Examples of Velocity Measurement and Data Reduction

Fig. 6 is a photograph showing the measurement of flow velocities with Novar current meters in a bubble plume. A total of 57 experiments were conducted, of which 37 were in water 1.92 m deep and 20 were in water 1.15 m deep. The controlling parameters of the experiments were the Froude number F, the Weber number W and the expansion parameter E defined as below:

$$F = \frac{Q_o^2}{gd^5} \; ; \quad W = \frac{\rho_w Q_o^2}{\sigma d^3} \text{ and } E = \frac{\rho_{at}}{\rho_w g d} \tag{9}$$

where Q_o is the rate of nitrogen flow from the source, g is the gravitational accelerations, d is the water depth, ρ_w is the density of the water, σ is the surface tension of the ambient fluid and ρ_{at} is the absolute pressure at the water surface. In the experiments, the above parameters were systematically controlled.

Fig. 7 is the sequential velocity measurement of a plume whose parameteric values were

$F = 5.00\text{x}10^{-12}$; $W = 6.96\text{x}10^{-6}$; $E = 5.38$,
$d = 1.92$ m; $Q_o = 3.58\text{x}10^{-5}$ m^3/s; $\sigma = 2.66\text{x}10^{-3}$ N/m.

The velocities have been normalized on a nominal velocity of 40 cm/s. The upper recording was obtained at the centreline at a height of 70 cm from the orifice. It is seen from this velocity recording that the velocity fluctuated over a large range. The meandering of the plume can also be seen from the low frequency variation of the mean value. The lower recording was obtained at the same height but at a distance of 6 cm from the centreline. It is seen from this recording that the velocity showed much less fluctuation, especially when the velocity was low. This could be the case when there were few gas bubbles in the flow. As the plume meandered and greater velocities were measured, larger velocity fluctuations were also observed. A frequency analysis of these two velocity measurements is shown in Fig. 8. It is seen from Fig. 8 that while the

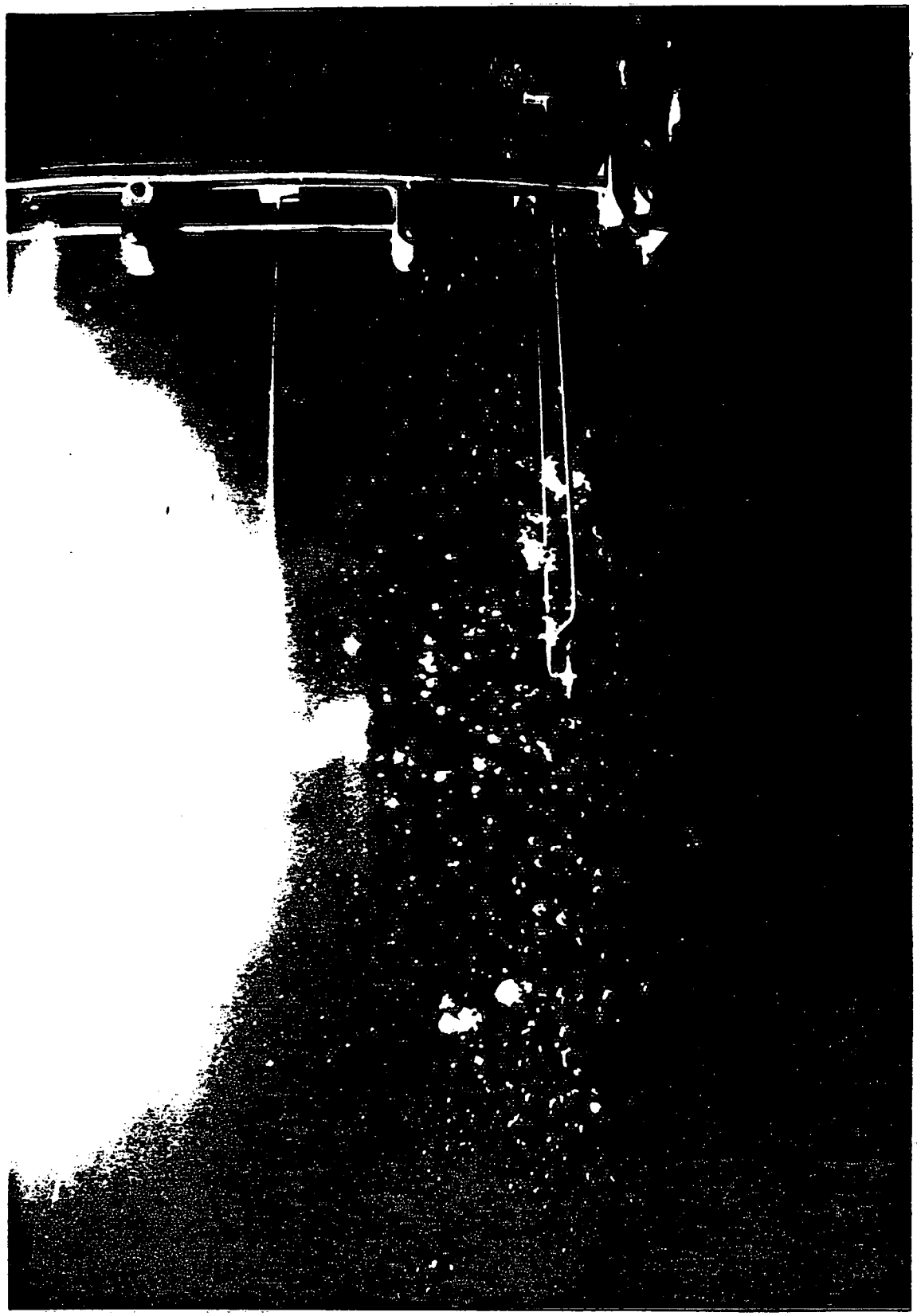

Fig. 6 Current Meters in Bubble Plume.

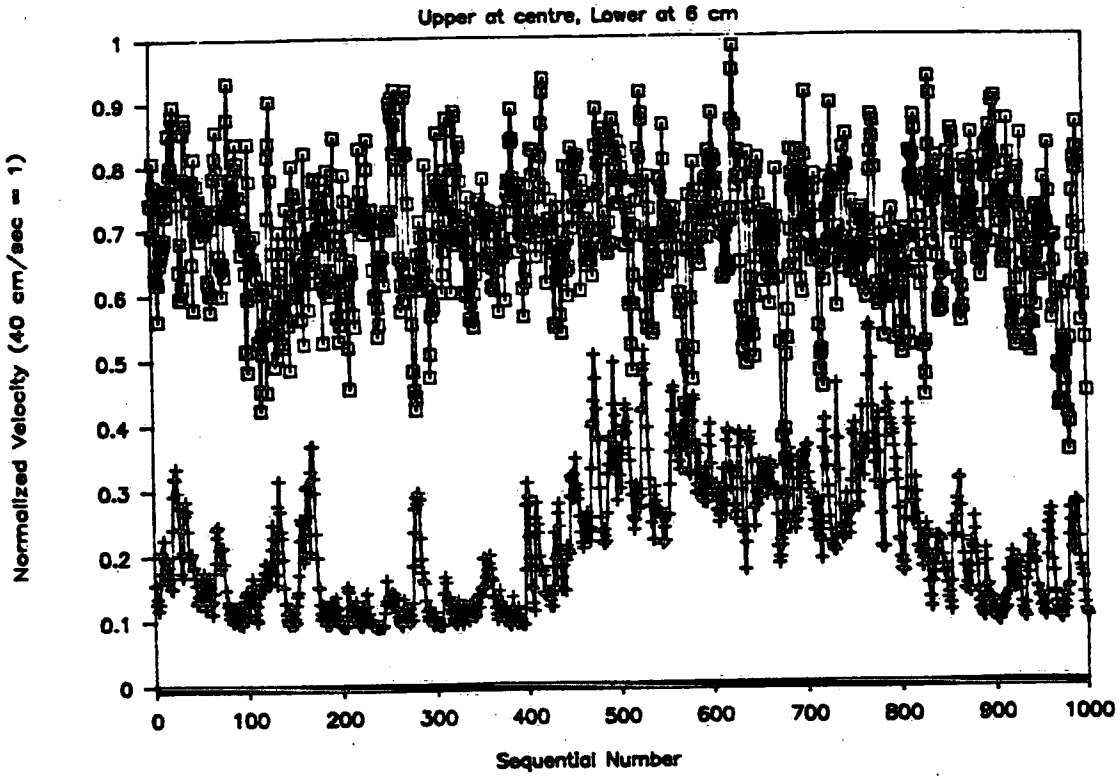

Fig. 7 Time Series Velocity Recordings of a Weak Bubble Plume. (At 70 cm above source; Time between Successive readings = .25 S)

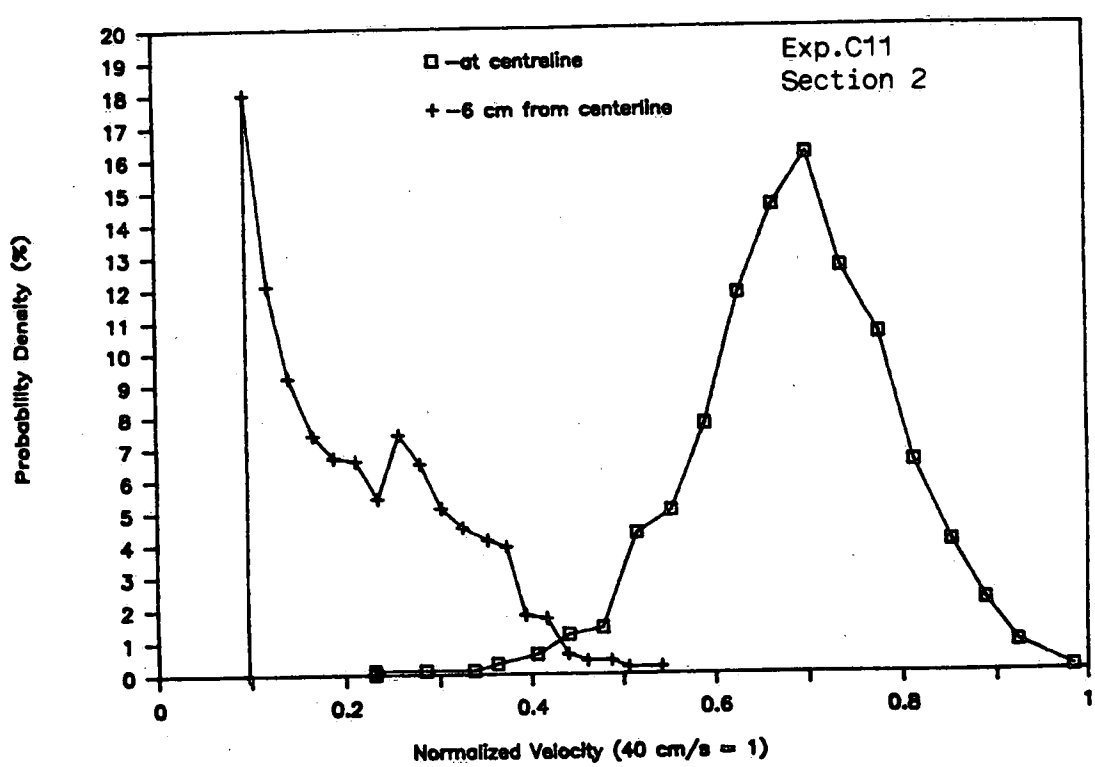

Fig. 8 Velocity Frequency Distributions for Records shown in Fig. 7.

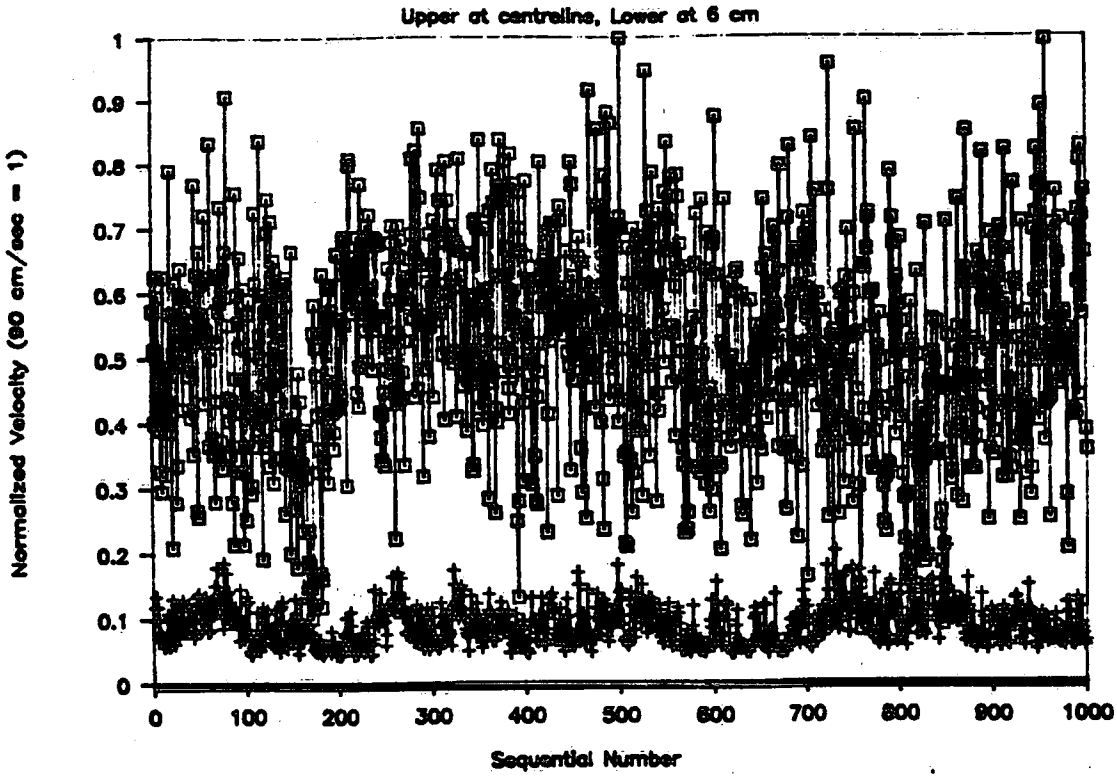

Fig. 9 Time Series Velocity Recordings of a Strong Bubble Plume. (See note under caption of Fig. 7.)

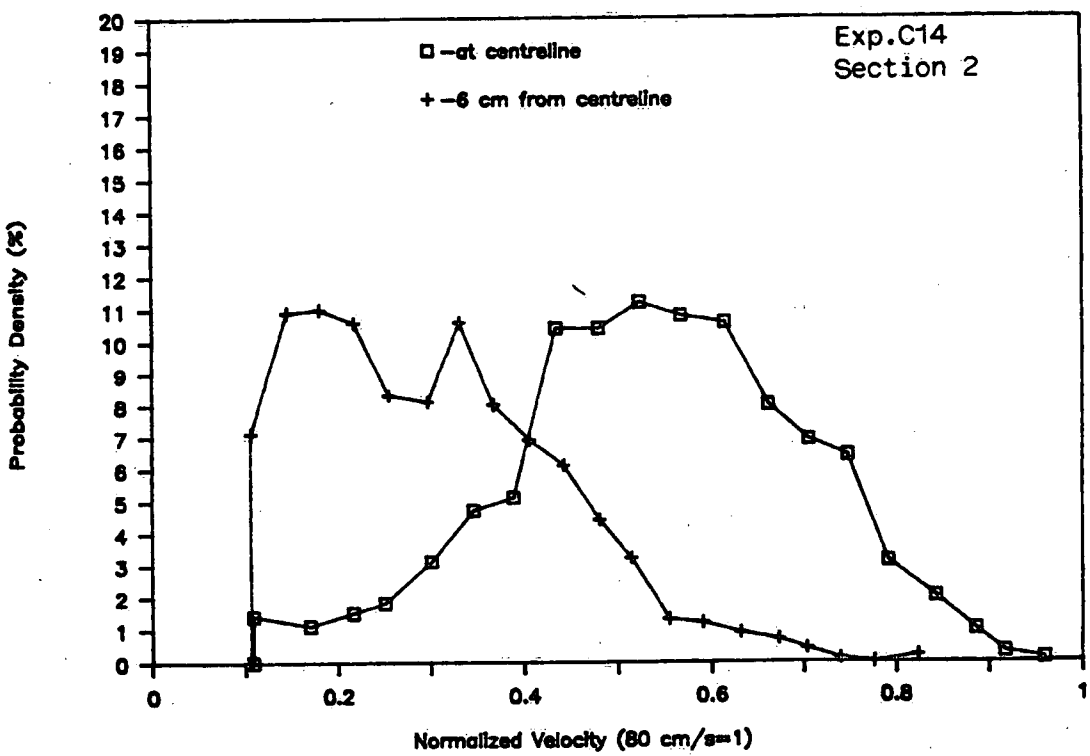

Fig. 10 Velocity Frequency Distributions for Records shown in Fig. 9.

frequency distribution for the centreline velocity was close to a normal distribution, the frequency distribution for the 6 cm point was very much skewed to the lower velocity end. As a matter of fact, the lowest velocity was also the velocity of the greatest probability.

Fig. 9 shows the velocity measurement of another plume whose parameters were:

$F = 4.00 \times 10^{-10}$; $W = 5.54 \times 10^{-4}$; $E = 5.38$,
$d = 1.92$ m; $Q_0 = 3.20 \times 10^{-4}$ m^3/s; $\sigma = 2.66 \times 10^{-3}$ N/m.

The measurements were also made at a height 70 cm above the source. The upper recording was again for the centre point and the lower recording again for the 6 cm point. By comparing the parameters of the two experiments, one sees that the latter was a stronger plume because the rate of gas emission was about ten times that of the former (which produced greater values of F and W) although the other parameters were the same. For the stronger plume, at the centreline, one sees that the mean velocity was higher, the flcutation greater and the plume meandered more. For the 6 cm point, although the mean velocity was higher (because of the higher nominal velocity used in normalizing), the velocity showed less fluctuation and less meandering.

The frequency analysis of the data of Fig. 9 is shown in Fig. 10. In comparison to Fig. 8, one sees that for a stronger plume, the frequency distribution was wider spread and the most probable frequency lower. However, for the centreline, the frequency distribution was again close to normal distribution and for the 6 cm point the frequency distribution was again skewed to the lower velocity end. Systematic analysis of the velocity data should yield valuable information on gas in liquid bubble plumes under different parameteric conditions.

Conclusions

The experimental method and instrumentation for studying gas-in-liquid bubble plumes under laboratory conditions reported in the paper have been shown to be workable and important experimental information has been obtained. The direct measurement of the percentage of gas content at a point in the plume would be very desirable to further the theoretical study. It would be even better if the size distribution of the gas bubbles could also be directly measured.

References

Bulson, P.S., 1961, Currents produced by an air curtain in deep water, Dock and Harbour Authority, Vol. 42, No. 487, May, pp. 15-22.

Burgess, J., 1981, Subsurface collectors for underwater oil well blowouts, Proc. of Workshop on Sub-sea contaminant of oil, Toronto, Institute for Environmental Studies, University of Toronto, Toronto, Ont., Pub. No. EE-18, pp. 91-110.

Kobus, H.E., 1968, Analysis of the flow induced by air-bubble systems, Proc. of 11th Conference on Coastal Engineering, Sept., London, Vol. II, pp. 1016-1031.

Milgram, J.H., 1983, Mean flow in round bubble plumes, Journal of Fluid Mechanics, V. 133, pp. 345-376.

Topham, D.R., 1975, Hydrodynamics of an oil well blowout, Beaufort Sea Technical Report, Institute of Ocean Sci., Victoria, B.C., No. 33, 52 p.

Tsang, G., 1984, Modelling criteria for bubble plumes - A theoretical approach, Can. J. of Civil Engineering, Vol. 11, No. 2, pp. 293-298.

Tsang, G. and Wu, F.L., 1989, personal communication.

Watson, A.S. and Madsen, N.K., Handbook notes for the bubble-chamber profiler system, Hydraulic Division Report, NWRI, April 1984, 10 p.