96-90

Environment Canada
Water Science and Technology Directorate

Direction générale des sciences et de la technologie, eau
Environnement Canada

Laser-Induced Fluorescence Determination of Thallium in Sediments

By:

V. Cheam, J. Lechner, R. Desrosiers

NWRI Contribution # 96-90

TD
226
N87
No. 96-
90

96-90

LASER-INDUCED FLUORESCENCE DETERMINATION OF THALLIUM IN SEDIMENTS

by

V. Cheam[1], J. Lechner[1], and R. Desrosiers[2]

National Water Research Institute, [1]Aquatic Ecosystem Restoration Branch, [2]Research Support Branch, Box 5050, Burlington, Ontario, Canada L7R 4A6

MANAGEMENT PERSPECTIVE

Title: Laser-induced fluorescence determination of thallium in sediments

Authors: **Cheam, V., Lechner, J.**, and Desrosiers, R.

NWRI Publication #:

Citation:

EC Priority/Issue: This work was done as part of the GL2000 Program under the Science in Support of Large Ecosystem Initiative and under the Great Lakes Preventive Initiative, which call for, among other activities, the development of "New Technologies" and an increase in "Analytical Capabilities". The development of ultrasensitive instrument such as the Laser-Excited Atomic Fluorescenc Spectrometer (LEAFS) and LEAFS-based analytical methods, as well as their applications in studying Great Lakes sediment, water and pore water form an integral part of the Initiatives.

Current Status: Thallium (Tl) is a highly toxic trace element, reported to be more acutely toxic than lead, cadmium, mercury, zinc and copper in mammals. For the determination of Tl in sediments, this paper presents a simpler and more direct analytical method than others taking advantage of the LEAFS ultrasensitivity. It simply uses a nitric - hydrofluoric acid mixture at room temperature (a "cold dissolution" procedure as opposed to the hot acid digestion) followed by a dilution with water (as opposed to the tedious steps of separation and preconcentration).

Next Steps: The method has been used to generate thallium data in sediment cores from the various locations of Lakes Erie and Ontario. The data are required (along with thallium data already generated by LEAFS for water and pore water) to carry out the on-going studies of the geochemical transport of Tl in lake environments.

Abstract

This paper describes a simple dissolution procedure for sediment to be analysed for thallium by Laser-Excited Atomic Fluorescence Spectrometry (LEAFS). It simply uses a nitric - hydrofluoric acid mixture at room temperature (a "cold dissolution" procedure as opposed to the hot acid digestion) followed by a dilution with water (as opposed to the tedious steps of separation and preconcentration). Excellent accuracy (91-106 per cent recoveries) and precision (4-10 % relative standard deviation) were demonstrated by the use of five sediment reference materials of diverse origins. The detection limit was estimated to be 0.5 ng/g of thallium. Additionally, a hot plate digestion procedure, using an in-house designed semi-enclosed teflon beaker, was also investigated; its analytical results agreed with certified values and confirmed the adequacy of the cold dissolution technique. The method is being applied to study the sediment - water interactions in lake environments

1 Introduction

It is important to study thallium (Tl) along with other metallic elements such as Pb, Cd and Hg because it has been shown that Tl is also an environmental pollutant [1-4]. It is also well known that Tl is a highly toxic element and it is an Environmental Protection Agency priority pollutant [5-9]. Numerous cases of Tl toxicity and poisoning have been recorded, but perhaps the most famous recent case of Tl poisoning, the first one to be successfully diagnosed and treated via the internet, occurred in China late 1994 [10]. The patient became suddenly sick, bald, and in three months became unconscious, in coma, and on a respirator. After four months of unsuccessful diagnosis, Peking University sent an SOS e-mail asking for help. Within about three weeks time, the e-mail respones from around the world helped make the correct diagnosis, Tl poisoning. The main treatment, jointly advised by the experts using e-mail, was the prussian blue dosage. By July 1996, the patient has somewhat but not fully yet recovered.

To determine thallium in geological materials, several authors have used hot acid digestion, followed by separation from the matrix and preconcentration of thallium in a suitable medium before the analysis. Ikramuddin [11] and Terashima [12] used hydrofluoric - nitric hot acid digestion of solids followed by dissolution with hydrochloric acid. Then the separation - extraction and concentration of Tl (III) into an organic solvent, methyl isobutyl ketone (MIBK) was made. Thallium in MIBK was determined by graphite furnace [11] and flame [12] atomic absorption spectrometry. The method is lengthy, tedious requiring separation and preconcentration as the instruments are not sensitive enough.

Tsakovski et. al. [13] also used HF-HNO_3 hot acid digestion followed by dissolution of residues with HCl. Bromine was then added to maintain the higher oxidation state of Tl (III). Thallium was then separated from the solution matrix by the use of a strongly basic anionite resin DOWEX, eluted from the resin using HCl, and concentrated by the use of 1 ml of ascorbic acid solution, which was then analysed by flame AAS. This method is also lengthy and tedious.

This paper presents a simpler, more direct, more sensitive method taking advantage of the ultrasensitivity of the Laser-Excited Atomic Fluorescence Spectrometry (LEAFS). It simply uses a nitric - hydrofluoric acid mixture at room temperature (a "cold dissolution" procedure as opposed to the hot acid digestion) followed by a dilution with water (as opposed to the tedious steps of separation and preconcentration). The solution is then directly analysed by LEAFS. Five certified sediment reference materials were used to demonstrate accuracy and precision. Furthermore, a modified hot plate acid digestion was investigated and used to confirm the results obtained by the cold dissolution procedure.

Other authors have used LEAFS (often referred to as Laser-Induced Fluorescence) to determine thallium in various substrates such as liquids [14-19], biological and agricultural materials [20-21], air samples [22] and pure and alloyed metals [15, 23], but none in sediments. The proposed sediment method provides thallium data which are compatible with those that had been generated by LEAFS for lake water and sediment pore water. All three types of data (water, pore water and sediment) are required for the on-going studies of thallium geochemical transport in lake environments.

2 Experimental

2.1 Laser-Excited Atomic Fluorescence Spectrometer

A mixture of 0.8 % hydrogen and 99.2 % neon was used as the flowing buffer gas and was found to be a much preferred medium than pure neon (the originally recommended buffer gas) for the Copper Vapor Laser used (Metalaser Technologies MLT20). The mixture has consistently given better laser stability, and extra power for elements requiring high energy to attain optical saturation. The 511 nm line was used to optically pump a Laser Photonics dye laser using Rhodamine 575 dye. The dye laser output, 554 nm was then frequency-doubled by a second harmonic generator to give the 277 nm UV light. This light, directed through a pierced mirror into a graphite furnace (Perkin-Elmer

HGA 2100), was used to excite Tl atoms generated in the furnace. The fluorescence light (353 nm) emitted by the excited atoms was collected and measured via a narrow bandpass filter (1 nm)- monochromator- photomultiplier- boxcar system. A 6 kHz repetition rate was used. Normal operating power outputs of the lasers are 5-6 W for the CVL and 0.3-0.5 W for the dye laser. The approximate bandwidth of the laser light is 0.003 nm. In the furnace, the area of the laser beam is about 2.1 mm^2, the pulse duration about 7 ns, and the peak irradiance about 23 kW/cm^2. The drying and ashing temperatures were set at 120°C and 300 °C both for 40 s ramped. The LEAFS system has been described in detail elsewhere [19, 24-25].

The data acquisition program determined the peak height (maximum response) and computed the peak area by numerical integration using data occuring whithin a time window starting with furnace atomization and ending at a time preset by the operator. This adjustable window allows the operator to include or exclude peak tailings caused by, for example, interfering species or excess blackbody radiation.

2.2 Dissolution and digestion of sediment

All sediments used are dry and homogenized. The "cold dissolution" procedure is as follows: weigh 0.1 g of sediment into 50 ml polyethylene bottle; add 2.5 ml of concentrated HNO_3 and let stand for 1 h; add 2.5 ml of concentrated HF and let the mixture stand overnight; dilute the mixture to 500 ml with deionized doubly distilled water.

Hot plate digestion uses the same sediment preparation as the cold dissolution technique described above; the mixture is digested at 130°C using the specially designed teflon beaker cap for the 25-ml teflon beakers (Fig. 1) which makes the ensemble a semi-enclosed system. The digestion to near dryness lasted about 1.5 hours; then 10 ml of 3.3 % HCl were added to cover the dark ring created by the digestion, and the mixture gently heated to just before boiling to redissolve the residues. This is a modification of the procedure used by Tsakovski et. al. [13]. The digest was then diluted to 500 ml with 0.2%

acidified deionized doubly distilled water and then analysed as above by LEAFS. Peak height was used for quantitation.

Blanks for both procedures were determined to be very low in thallium, sub- to low ng/l.

2.3 In situ known addition analysis

Details of the *in situ* known addition analysis have been described earlier and this technique was used for all analyses [26]. A programmable micropipette was used to carry out *in situ* known addition pick-ups and injections into the graphite furnace. Only 3 μL of aqueous solutions was needed for each analysis. Standard concentrations used varied from 10 - 300 ng/l. Deionized distilled water acidified to 0.2% with ultrapure nitric acid (Sea Star) was used as standards matrix and also as carrier for the total liquid delivery into the graphite furnace.

3 Results and discussion

3.1 Sample matrix and standard addition

Several authors have had to use standard addition technique to obtain accurate thallium data [14-15, 17-19, 27]. Thallium signals are suppressed by the complex matrix of natural samples or high acid content so that analysis by means of a standard calibration curve is unreliable. We used a recently developed *in situ* known addition technique to effectively handle the matrix interference and signal suppression [26]. Detailed discussions of the effects of sample matrices can be found elsewhere [19].

3.2 Improvement of the recently proposed procedure

After evaluating several acids and their mixtures, a tentative "cold dissolution" procedure for sediment was recently proposed [28], in which 0.1 g of sediment was oxidized by 2.5 ml of concentrated nitric acid for 1 h at room temperrature, followed by the addition of 2.5 ml of HF to break up the silica lattice of the sediment overnight. One milliliter of the "dissolved" sediment was pipetted and diluted to 100 ml followed by LEAFS analysis. One certified reference material (CRM) was used for accuracy confirmation. In the present paper where five sediment reference materials of various origins are used to validate the method, it was found less tedious and more direct to simply dilute the whole sediment-acid mixture with 500 ml of Milli-Q-water into pre-cleaned polyethylene bottles, resulting in a final acid content of 1%. The final solution corresponds to one containing 0.2 mg of "dissolved" sediment in 1 ml of 1% acid, which is much more dilute than slurry solutions commonly used in GFAAS analyses of solids. For example Bermejo-Barrera et.al. [29] used 0.25g of marine sediment and obtained a final slurry volume of 10ml, or a sediment content of 25 mg/ml. The more dilute a solution is, the lesser the matrix interferences, which is advantageous for our LEAFS system.

Note that a sediment mass much smaller than 0.1 g could have been used and would still contain enough analyte to be detected by our LEAFS system. The reason for using this amount was because sediment CRM instructions usually call for a minimum weight of 0.1 g to be used to ensure adequate representation (homogeneity) of the sediment. Another reason is a practical one: weighing and handling 0.1g of fine, dry sediment accurately is a much more easily achievable and reliable task than working with 0.01 g.

3.3 Effects of atomization temperature

Figure 2 shows the fluorescence responses for several analyses of a reference material, GSD-3, at various atomization temperatures ranging from 1800 to 2800 °C at 100°C interval. At 1800°C the response peak is somewhat noisy (not clean and full of zigzagged lines) particularly at the tail end, which is probably due to the black body radiation of the furnace. This cumbersome tail end would give erroneous, non-representative peak area, but most likely will not affect quantitation by peak height. This unsmoothed tail persists at higher temperatures but improves at 2400°C and higher. By 2600°C the noisy tail separates from the analyte peak; better separation is achieved at 2700 and 2800°C. Thus to get a meaningful peak area, the atomization temperature should be 2600-2800°C. A meaningful peak height does not require such a high temperature. (It is worthy to note here that Ikramuddin [11] used the same type of graphite furnace as ours, HGA 2100, atomised at 2700°C and used peak heights for their AA analysis of geological materials).

3.4 Peak height versus peak area

It has been commonly accepted that peak area instead of peak height should be used for quantitation in atomic spectrometric analyses. We have successfully used peak height in water analysis. In this study we are comparing the precision and accuracy of results obtained using both peak heights and peak areas, which were generated by the use of several sediment reference materials. To avoid integrating the noisy tail, the atomization temperature of 2700°C was chosen and integration made at mid - point at the flat baseline between the analyte peak and the black body radiation (Fig. 2). (Note that peak height once acquired is independent of the cut-off point for integration.) Table 1 compares the certified values of four known CMRs [30] to those obtained in this study using peak height and peak area, and shows that the peak height results are at least as good as the peak area results when compared to the certified values. With respect to precision, Table 2 compares the relative standard deviations (RSD) obtained using peak height vs. peak

area for both the direct analysis of solutions and the analysis of solutions by known addition. The RSD using peak height is generally smaller than the RSD for peak area. Thus, there seems no reason why peak height should not be used, at least in our LEAFS system.

Besides giving at least as precise and as accurate results as peak area, peak height has a practical advantage in our works. It allows more data / more peaks collected in one data-collecting frame because each peak in the peak height mode takes less space (each peak maximum is independent of the rest of the response which can thus be discarded as far as data collection is concerned). This is quite useful and convenient in routine analysis. Furthermore it was observed that the NBS 1645 and the JLk-1 samples require higher atomization temperature than the GSD-3 sample to separate the tail from the analyte peak to allow satisfactory peak integration, whereas the peak height mode was found independent of the sample type as it ignores the last part of responses. Thus for quantitation we shall continue to use peak height and the atomization temperature of 2400°C (compared to 2700°C by Ikramuddin [11] and 2300°C by Terashima [12]). The right portion of Fig. 2 gives an example of actual data collection in routine analysis of a CRM using this mode of analysis.

3.5 Performance characteristics

Hot plate and microwave digestions were carried out to further ascertain the adequacy of the proposed dissolution procedure. In the hot plate digestion, the specially designed, cone-shaped teflon cap (Fig. 1) was found to give a more controlled digestion than a completely open system and minimizes the possible loss of analytes. The microwave digestion used the same acid mixture as the cold dissolution and followed the manufacturer's procedure. A slurry technique was attempted briefly without much success and was discontinued.

Table 3 compares the results from the cold dissolution technique to the certified values of 4 CRMs as well as to the values obtained from the hot plate and microwave

digestion. The results agree well within the experimental errors. The table further shows the agreement between the results by the cold dissolution and the hot plate digestion using ten different NWRI sediment reference materials. To further confirm the accuracy, four of these latter sediments (WQB-1, WQB-3, EC-1, and EC-3) were spiked with 100 ng/l of thallium during both the sample dissolution and sample digestion; the percent recoveries were satisfactory ranging from 87% to 107%.

The complex matrix of sediment solution may generate background signals (concomitant scatter, molecular fluorescence, and non-analyte atomic fluorescence) which interfere with the analyte fluorescence signal..Several sediment samples were used to determine these backgrounds, whose signals were obtained at ± 0.05 nm away from the analytical line and were found to be very small and the same as those of the acidified water blank, which indicates no background interference. The detection limit for unfiltered waters was determined to be 0.03 ng/l [19]. The detection limit for sediment was estimated to be 0.5 ng/g, which compares favorably with the detection limit of 40 ng/g reported by Tsakovski et.al. [13]. Table 2 gives the relative standard deviation of numerous analyses of four CRMs and indicate good precision by peak height.

Sediment data are being generated and will be used along with the water and porewater data to assess the geochemical transport of thallium in several natural systems. Table 4 presents the results of one of the sediment - porewater concentration profiles which will be interpreted along with others being analysed.

The cold dissolution method is simplest and most direct. However, the presence of HF in the final solution can be bothersome in sample handling and in other analytical methods or instruments. Also, with coarse sediments, the technique may not be as effective as the hot plate digestion, which will likely give a more complete dissolution. On the other hand, hot digestion using HF is undesirable due to possible serious health effects and is often avoided by analysts.

Acknowledgment: We like to thank Dr. Norobu Imai of Geological Survey of Japan for providing us two reference materials, JLk-1 and JSd-1.

References

1. Sperling KR, Neumann V, Bahr B (1994) CANAS 93 Colloquium Analytische Atomspektroskopie ISSN 0945-2524:387-394
2. Weissberg BG (1969) Econ Geol, 64:95
3. Korkisch J, Steffan I (1979) Intern J Environ Anal Chem 6:111-118
4. Balke KD, Kussmaul H, Siebert G (1973) Z Dtsch Geol Ges 124:447-460
5. Keith L H, Telliard WA (1979) Environ Sci Technology 13:416-423
6. Mathews, J, Anzarut A (1968) Can Med Assoc J 99:72-75
7. Zitko V The Sci Tot Environment 4:185-192
8. Venugopal B, Luckey T D (1978) Metal Toxicity in Mammal Volume 2 Plenum Press, New York 122-127
9. Canadian Water Quality Guidelines, Inland Waters Directorate, Ottawa, (1987) pp 3-23, 6-67 and 6-68
10. http://www.radsci.ucla.edu/telemed/zhuling/index.html
11. Ikramuddin M (1983) Atom Spectroscopy 4:101-103
12. Terashima S (1989) Geostandards Newsletter 13:277-281
13. Tsakovski S, Ivanova E, Havezov I (1994) Talanta 41:721-724
14. Falk H, Tilch J (1987) J Anal. Atom. Spectrom 2:527-531
15. Falk H, Paetzold HJ, Schmidt KP, Tilch J (1988) Spectrochim Acta 43B:1101-1109
16. Smith BW, Farnsworth PB, Cavalli P, Omenetto N (1990) Spectrochim Acta 45B:1369-1373
17. Axner O, Chekalin N, Ljungberg P, Malmsten Y (1993) Intern J Environ Anal Chem 53:185-193
18. Baiocchi C, Giacisa D, Saini G, Cavalli P, Omenetto N, Passarella R, Polettini A, Trincherini PR (1994) Intern J Environ Anal Chem 55:211-218
19. Cheam V, Lechner J, Desrosiers R, Sekerka I (1996) Intern J Environ Anal Chem, 63:153-165
20. Dougherty JP, Costello JA, Michel RG (1988) Anal Chem, 60:336-340

21. Butcher DJ, Irwin RL, Takahashi J, Su EG, Wei G.-T, Michel RG (1990) Appl Spectroscopy, 44: 1521-1533
22. Liang Z, Wei GT, Irwin RL, Walton AP, Michel RG (1990) Anal Chem, 62:1452-1457
23. Irwin RL, Butcher DJ, Takahashi J, Wei GT, Michel RG (1990) J Anal. Atom. Spectrom 5:603-610
24. Cheam V, Lechner J, Sekerka I., Desrosiers R, Nriagu J, Lawson, G (1992) Anal Chim Acta, 269:129-136
25. Cheam V, Lechner J, Desrosiers R, Sekerka I, Nriagu J, Lawson G (1993) Intern J Environ Anal Chem, 53:13-27
26. Cheam V, Lechner J, Sekerka I, Desrosiers R (1994) J Anal Atom Spectrom 9:315-320
27. Lopez-Garcia I, Sanchez-Merlos M, Hernandez Cordoba M (1996) Anal Chim Acta 328:19-25
28. Cheam V, Lechner J, Desrosiers R, Azcue J, Rosa F, Mudroch A (1996) Fres J Anal Chem 355:336-339
29. Bermejo-Barrera P, Barciela-Alonso C, Aboal-Somoza M, Bermejo-Barrera A (1994) J Anal Atom Spectrom 9:469-475
30. Govindaragu K (1994) Geostandards Newsletter 18:1-158

Table 1. Comparison of certified Tl values and those obtained using peak height and peak area, μg/g (n ≥ 6, atomization temperature 2700°C).

CRMs	Sediment type	certified	by peak height	by peak area
NIST 2704	River sediment	1.06 ± 0.07	1.08 ± 0.10	1.09 ± 0.10
GSD-3	Stream sediment	0.58 ± 0.08	0.59 ± 0.07	0.45 ± 0.06
NBS 1645	River sediment	1.44 ± 0.07	1.44 ± 0.09	1.47 ± 0.6
Jlk -1	Lake sediment	1.11	1.01 ± 0.22	1.26 ± 0.21

Table 2. Comparison of precision (RSD) for the analysis of CRMs using peak height versus peak area (atomization temperature of 2700°C, n ≥ 6).

CRMs	RSD/ Direct analysis of digests		RSD/ Analysis of digests by known addition	
	peak height	peak area	peak height	peak area
NIST 2704	4.8	10.3	3.5	12.0
GSD-3	4.5	9.0	4.9	14.9
NBS 1645	5.2	6.0	4.8	8.4
Jlk -1	3.3	8.6	7.1	11.1

Table 3. Comparison of results, μg/g of Tl, obtained by hot plate digestion, cold dissolution, microwave digestion, and certified values, n ≥ 4 (a. t. 2400°C)

Reference Material	Sediment Origin	Certified Values	Hot Plate Digestion	Cold Dissolution	Microwave digestion*
NIST 2704	Buffalo River	1.06 ± 0.07	1.11 ± 0.08	1.12 ± 0.1	1.2 ± 0.08
JSd-1	Stream composite,Ibaraki	0.4	0.39 ± 0.06	0.34 ± 0.04	0.4 ± 0.05
JLk-1	Lake Biwa, Japan	1.11	1.05 ± 0.06	1.01 ± 0.05	0.94 ± 0.11
NBS 1645	Indiana Harbor Canal	1.44 ± 0.07	1.52 ± 0.20	1.51 ± 0.15	1.50 ± 0.10
WQB-1	Lake Ontario	---	1.26 ± 0.2	1.29 ± 0..09	---
WQB-3	Lake Ontario Blend	---	1.09 ± 0.16	0.93 ± 0.09	---
TH-1	Toronto Harbor - 1	---	0.63 ± 0.11	0.62 ± 0.06	---
TH-2	Toronto Harbor - 2	---	0.60 ± 0.07	0.70 ± 0.17	---
HR-1	Humber River	---	0.48 ± 0.02	0.48 ± 0.08	---
SUD-1	Sudbury, Ontario	---	0.50 ± 0.02	0.50 ± 0.02	---
EC-1	Hamilton Harbor	---	2.58 ± 0.53	2.57 ± 0.28	---
EC-3	Niagara River	---	1.04 ± 0.26	1.06 ± 0.09	---
EC-7	Lake St. Clair	---	0.61 ± 0.12	0.64 ± 0.12	---

* The same acid mixture as the one for the cold dissolution technique was used for the microwave digestion.

Table 4. A lake sediment - porewater concentration profile

Depth, cm	Sediment µg/g	Porewater ng/L
0-1	1.15	28.86
1-2	1.23	17.23
2-3	0.88	5.59
3-4	0.89	6.69
4-5	0.93	4.11
5-6	0.87	5.74
6-7	1.04	7.25
7-8	1.06	3.88
8-9	1.22	4.09
9-10	1.08	12.23
14-16	0.90	6.22
10-12	0.76	8.77
12-14	0.82	4.94
16-18	0.93	7.3
18-20	0.73	18.61
20-22	1.04	11.18
22-24	0.78	24.8
24-26	0.84	28

FIGURE CAPTIONS

Fig. 1. 25 ml digestion teflon beaker with specially designed lid.

Fig. 2. Effects of atomization temperatures (1800-2800°C) on the separation of analyte signal and its tail, and routine analysis at 2400°C with narrower window of data collection by peak height (in the analysis of reference material GSD-3; FB = furnace blank).

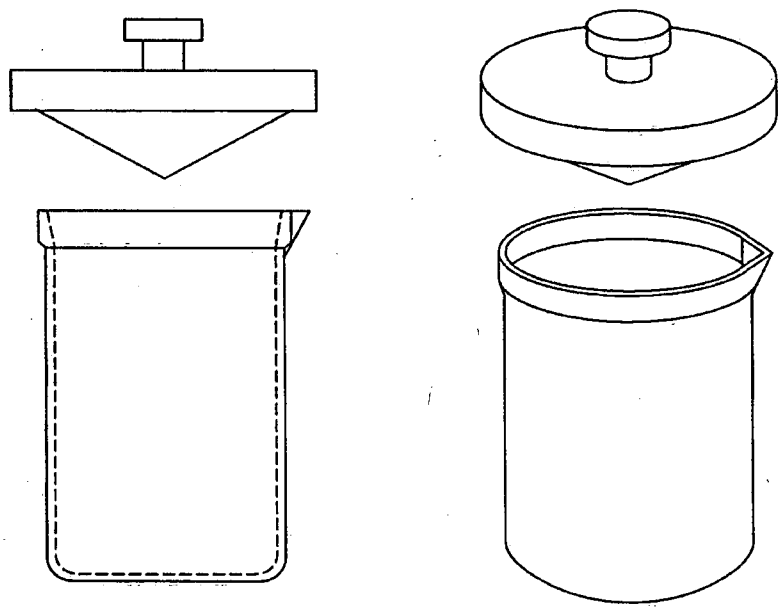

Figure 1. 25 ml digestion teflon beaker with specially designed lid.

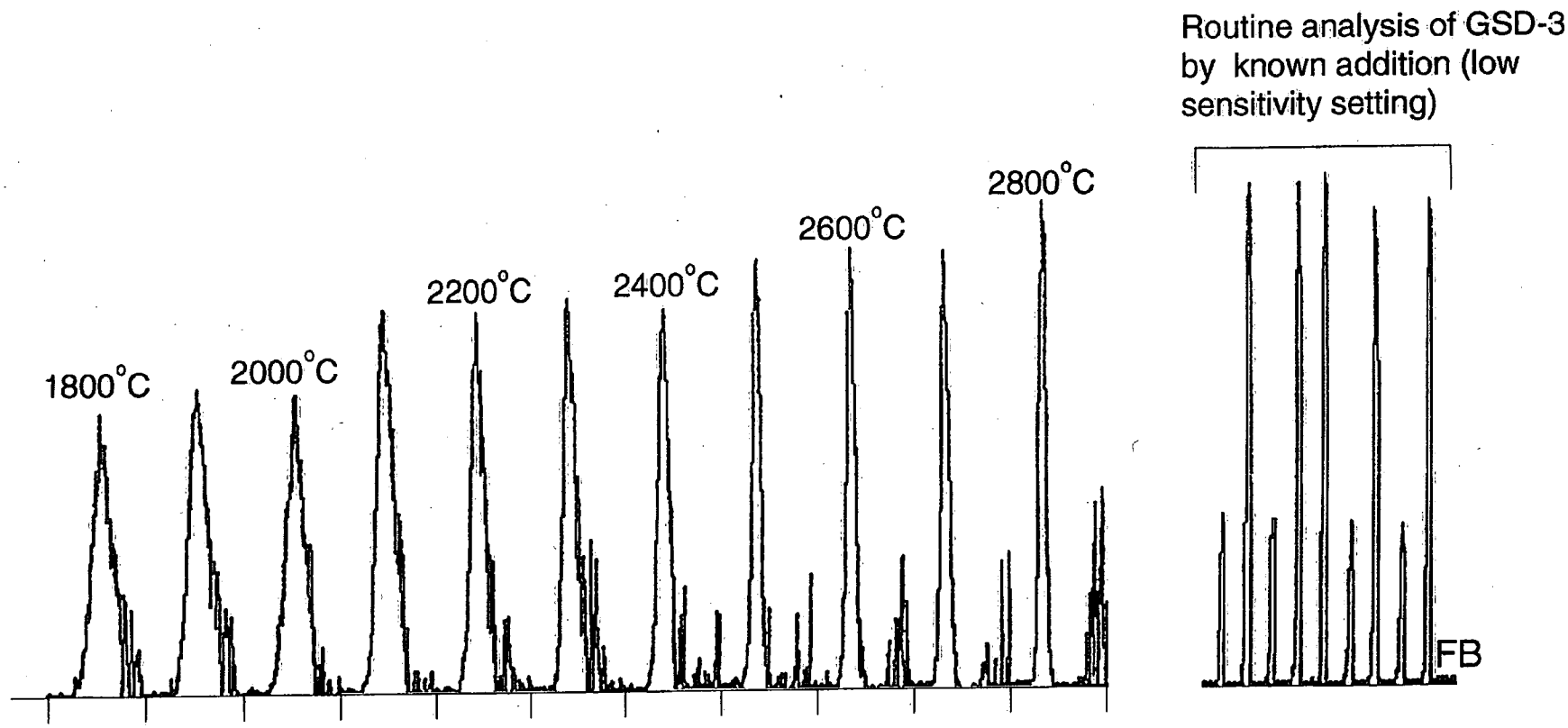

Figure 2. Effects of atomization temperature (1800-2800°C) on the seperation of analyte signal and its tail, and routine analysis at 2400°C with narrower window of data collection by peak height (in the analysis of reference material GSD-3; FB = furnace blank)

Environment Canada Library, Burlington
3 9055 1017 8263 8

Environment Canada | Environnement Canada

Canada

Canada Centre for Inland Waters
P.O. Box 5050
867 Lakeshore Road
Burlington, Ontario
L7R 4A6 Canada

National Hydrology Research Centre
11 Innovation Boulevard
Saskatoon, Saskatchewan
S7N 3H5 Canada

St. Lawrence Centre
105 McGill Street
Montreal, Quebec
H2Y 2E7 Canada

Place Vincent Massey
351 St. Joseph Boulevard
Gatineau, Quebec
K1A 0H3 Canada

Centre canadien des eaux intérieures
Case postale 5050
867, chemin Lakeshore
Burlington (Ontario)
L7R 4A6 Canada

Centre national de recherche en hydrologie
11, boul. Innovation
Saskatoon (Saskatchewan)
S7N 3H5 Canada

Centre Saint-Laurent
105, rue McGill
Montréal (Québec)
H2Y 2E7 Canada

Place Vincent-Massey
351 boul. St-Joseph
Gatineau (Québec)
K1A 0H3 Canada