RCA Report No. 95566-1

EXECUTIVE SUMMARY AND FINAL REPORT ON FEASIBILITY STUDY OF A TWO BAND UHF COMMUNICATIONS SATELLITE

DECEMBER 1972

Prepared for
Department of Communications
Ottawa, Canada
under
Contract No. PL 3610-1-0622
Serial OPL2-0005

RCA Research Laboratories

RCA Limited | Ste-Anne-de-Bellevue 810, Qué. | Canada

RCA Research Laboratories

(1)

EXECUTIVE SUMMARY AND FINAL REPORT ON FEASIBILITY STUDY OF A TWO BAND UHF COMMUNICATIONS SATELLITE

Prepared for

DEPARTMENT OF COMMUNICATIONS

Ottawa, Canada

under

Contract No. PL3610-1-0622

Serial OPL2-0005

RCA Report No. : 95566-1

Lab Report No. :

RCA Project No.: 6500 V

Shop Order No. : 9556

Approved By: Dr. M.P. Bachynski
Director of Research

Dated: DECEMBER 1972

NOTE

In the course of this program and in the preparation of this report, extensive use has been made of RCA Limited's background data and material, some of which is of a proprietary nature. In order to protect RCA Limited's commercial position, it is respectifully requested that the Government of Canada take this into consideration in dissemination of this report.

FEASIBILITY STUDY OF A TWO-BAND UHF COMMUNICATIONS SATELLITE

Executive Summary

1. Introduction

The work summarized here was performed under DSS Contract PL 3610-1-0622 Serial OPL 2-0005, under the design authority of the Department of Communications. The program extends a previous study which showed that it is feasible to develop, under specific constraints, a communications system "intended for low capacity voice telephone services to remote areas of Canada" and presented alternative design concepts which could be implemented in either the 225-400 MHz band or in the 1500 MHz band. The study reported here extended the general concept and developed designs appropriate to simultaneous operation in the 225-400 MHz and 2.5 GHz bands.

The traffic model provided by the D.O.C. designates four classes of user as shown in Table 1. Thus at the lower band, capability was to be provided to serve mobile and

Band	Service	Eclipse	Carriers	Frequency Assignments	Channels
225–400 MHz	Mobile	100 %	1	1	1 Half Duplex
	Transportable	50 %	20	20	10 Duplex
2.5 GHz	Fixed	50 %	20	40	20 Duplex
	Program	100 %	2	2	2 Simplex

Table 1 - Traffic Model

transportable stations with differing satellite EIRP's (Effective Isotropic Radiated Power), while at the higher band radio program distribution and higher quality fixed station telephony was required.

In conjunction with the Design Authority and considering the 1977 time frame for implementation, it was decided to design to the projected Thor-Delta launch vehicle capability of 1890 lbs in transfer orbit. This capability was considered to have a high probability of being available without an excessive non-recurrent cost penalty to the

program. After appropriate allowances for interstage adaptor, apogee motor fuel etc. this resulted in designs to an initial on station weight of 963 lbs.

2. System Concepts

While the program constraints indicated a geostationary orbit, the specific operating frequencies and dual band nature of the requirements, coupled with the statistical nature of the major portion of the traffic (telephony) gave the possibility of several new modes of operation, and in turn permitted application of unique spacecraft techniques. In order to prevent major economic and/or technological penalties to the implementation program additional design objectives were established. These objectives were:

- All flight spacecraft to be identical
- Operational use of in-orbit spares
- Operational use of spacecraft early-life resources
- Non-tracking ground stations
- Maximum reliability of system.

In order to meet these objectives, the conceptual design work which is normally carried out at the single spacecraft level was instead carried out on the total space segment level as it would exist at various times in the mission i.e. single operational spacecraft, two spacecraft in orbit, early life power, end of life power, single point failures, eclipse vs sunlight operation etc. etc. In accordance with guidance of D.O.C. the traffic model quoted was considered to be the minimum acceptable for a viable service, and the design emphasis was placed on protecting the minimum traffic in all foreseeable circumstances but exceeding it to the maximum extent possible under "normal" operating conditions.

The opportunities for application of new concepts are the result of the statistical nature of the major portion of the traffic coupled with the requirement that the ground station antennas be of small diameter (4-6 feet). Thus at the lower band the ground station beam widths are such that spacecraft at quite widely separated orbital stations can be simultaneously illuminated by the up link beam. As a result, with only slight signal loss, the low band services can be split between two spacecraft spaced about 18° apart in longitude. Thus, the two spacecraft are never eclipsed simultaneously and, in principle, communications traffic can be maintained without secondary (battery) power. This "Sequential Eclipse" offers savings in weight which can be applied to increased communications, additional fuel etc.

However, the two spacecraft cannot operate at the same frequencies simultaneously when in the view of a common source. Thus it is necessary that the "identical" satellites exhibit different frequency plans, preferably without major hardware penalties. (In the detailed design portion of the study this objective has been achieved.)

In principle, it is also possible to split service, with each spacecraft operating in only one frequency band (although supplied with transponders at both frequencies) and carrying no redundancy. Then in the case of a transponder failure the functions of the two satellites are reversed to maintain service. This "Criss-Cross Redundancy" provides high protection against transponder failures although obviously not against failures of the spacecraft supporting subsystems.

While at the higher band (2.5 GHz) the ground station directivity is such that time spaced eclipse cannot be utilized, the spacecraft can be illuminated adequately by a fixed pointing antenna over reasonable excursions from its station. Thus "Reduced Inclination Control" when coupled with a technique of "Biased Inclination Insertion" provides additional savings in fuel weight. The antenna directivity also demands that this traffic be through a single satellite.

In order to make use of the early life power available in the spacecraft yet avoid substantial hardware difficulties e.g. in signal combining, the concept of "Non-identical Substitution" is incorporated providing a variable communications capability (fitting the available power) and also fulfilling the redundancy requirements. Where identical substitution is required, as might occur near the end of spacecraft life, it is available through the criss-cross redundancy feature.

By appropriate allocation of hardware and functions, it has proven possible to develop design concepts which incorporate these features yet fulfill the single satellite requirements. Thus the practical system fulfills the traffic model requirements for a single satellite and greatly exceeds it for the full system.

3. Spacecraft Alternatives

Whereas in the previous study it was found that low band services tended to be maximized in a 3 axis spacecraft configuration while the high band services were optimized in a dual spin configuration, it was not obvious which was the most suitable configuration for a dual band system. In the course of this study four basic concepts were examined as to feasibility with two detailed to a greater extent.

a) Electrically Despun - Dual Spin

At the request of the Design Authority, this concept was examined, although beyond the scope of the original tasks. The design was developed as a hybrid arrangement utilizing, at the lower band, electrical despin of an antenna array over the surface of the cylindrical solar array, with the high band services provided through a mechanically despun erectable antenna at the top of the spacecraft. The low band antenna was a more complex and higher gain version of the LES 6 antenna but still failed to provide sufficient gain, when coupled with the power available at the end of life, to fulfill the (single satellite) minimum traffic model.

The design concept was developed to the stage of basic configuration and budgets, but not pursued in the absence of more detailed predictions of antenna performance.

b) 3 Axis - Rigid Deployable Solar Array

This concept was put forward by the contractor as being of interest for use where the prime power demand is in excess of that available from dual spin concepts but somewhat less than from a flexible array such as CTS uses. The design developed was based on the ITOS/TIROS designs as adapted by RCA Astro-Electronics Division and proposed for the U.S. Domestic Program. Again basic budgets were developed but in the absence of detailed design and costing information the concept was not pursued, although the concept is considered a valid candidate for this mission.

c) Dual Spin

Dual spin concepts were examined in depth for this mission, with several differing designs traded off as to lifetime, inclination control, eclipse capability etc. The general conclusion is that the dual spin concept offers a wide range of design options which fulfill the general mission requirements, and allow incorporation of the features developed in the course of the study. Further, this concept appears to be the one which could most readily encompass changes in launch capability should they occur and, in particular, should the 1890 lb. transfer capability not be attained in the time frame of interest.

The design limitation for the dual spin configurations tends to be available power although both the power and weight margins tend to zero out almost simultaneously. This means the design makes full use of both resources. (A basic implementation margin equal to 5% of transfer orbit weight is carried separately in accordance with good design practice.)

The dual spin concept was developed in some detail and is the basis of the budgetary costs presented.

d) 3 Axis - Flexible Solar Array

A 3 axis concept utilizing a large extensible solar array was developed based on the extensive CTS data available. The general concept of such configurations is applicable where the mission demands on power are large considering the launch vehicle involved (as for CTS). In the present mission, the trade-offs tend to become weight limited by virtue of the secondary power demands in eclipse (if extensive use is made of the available primary power) and because of the large weight assignments to solar array extension and orientation.

This 3 axis configuration is considered viable for this mission although there is somewhat less range of tradeoffs than for the dual spin design, and it is also somewhat more sensitive to launch vehicle capabilities.

This concept was developed to some depth and cost differentials relative to the dual spin implementation indicated.

Communications

The transponder portion of the communications sub-system is the key to the operational flexibility of the overall system. As shown in Figures 2 and 3 there are two completely separate transponders, one at each band. In fact, in the dual spin design the only element of commonality is the antenna reflector while in the 3 axis design there is no point of dual function.

The low band transponder (Figure 1) shows the broad band low level receiver followed by a local oscillator mixer unit. The local oscillator is designed to put out either of two frequencies as determined by ground command. This allows the incoming signals from either one of two bands to be down converted to a set (80) of channelized I.F. strips. Thus two identical spacecraft can utilize a maximum of 160 frequency assignments (i.e. 80 each) without carrying additional I.F. hardware or violating the requirement to be identical. A number of these I.F. amplifiers have a gain change of 10 dB available, to provide the high EIRP down link signals.

After I.F. limiting and amplification, the signals are up converted and sent to one of two power amplifiers selected by command from an assortment of different types. As shown, there are broadband power stages carrying up to 3 high power carriers or up to 30 low power signals. It must be noted that only one of the power amplifiers in each of the multiplexer input arms can be powered up at one time, but because of their differing capabilities the demand on spacecraft resources can be varied.

The 2.5 GHz transponder (Figure 2) is more conventional in concept. It is a single translation, all r.f. repeater having two channels. Program material is carried in a transistor power amplifier capable of either 2 or 3 carriers. The telephony traffic is carried through a 20 watt Travelling Wave Tube amplifier (1 for 1 redundancy). The TWT proposed is an adaptation of a tube developed for S Band operation in the Apollo mission. It features dual mode operation (10 or 20 watts) and thus the demand on spacecraft resources can be reduced for eclipse or similar purposes.

The transponder specifications are summarized in Table 2.

The antenna portion of the sub-system differs according to the spacecraft configuration under consideration. In a dual spin design (Figure 3) the antenna consists of an erectable rib and mesh parabolic reflector 130" in diameter. This is about the largest diameter which can be carried in the fairing without complex mechanical arrangements. The feed is a structural amalgamation of a horn-type linear feed at 2.5 GHz with a reflector backed crossed dipole feed providing circularly polarized low band illumination.

For the 3 axis design the antennas are separate at high and low bands. The high band is a simple parabola with horn feed while at 300 MHz the antenna is a quad helix array (Figure 4).

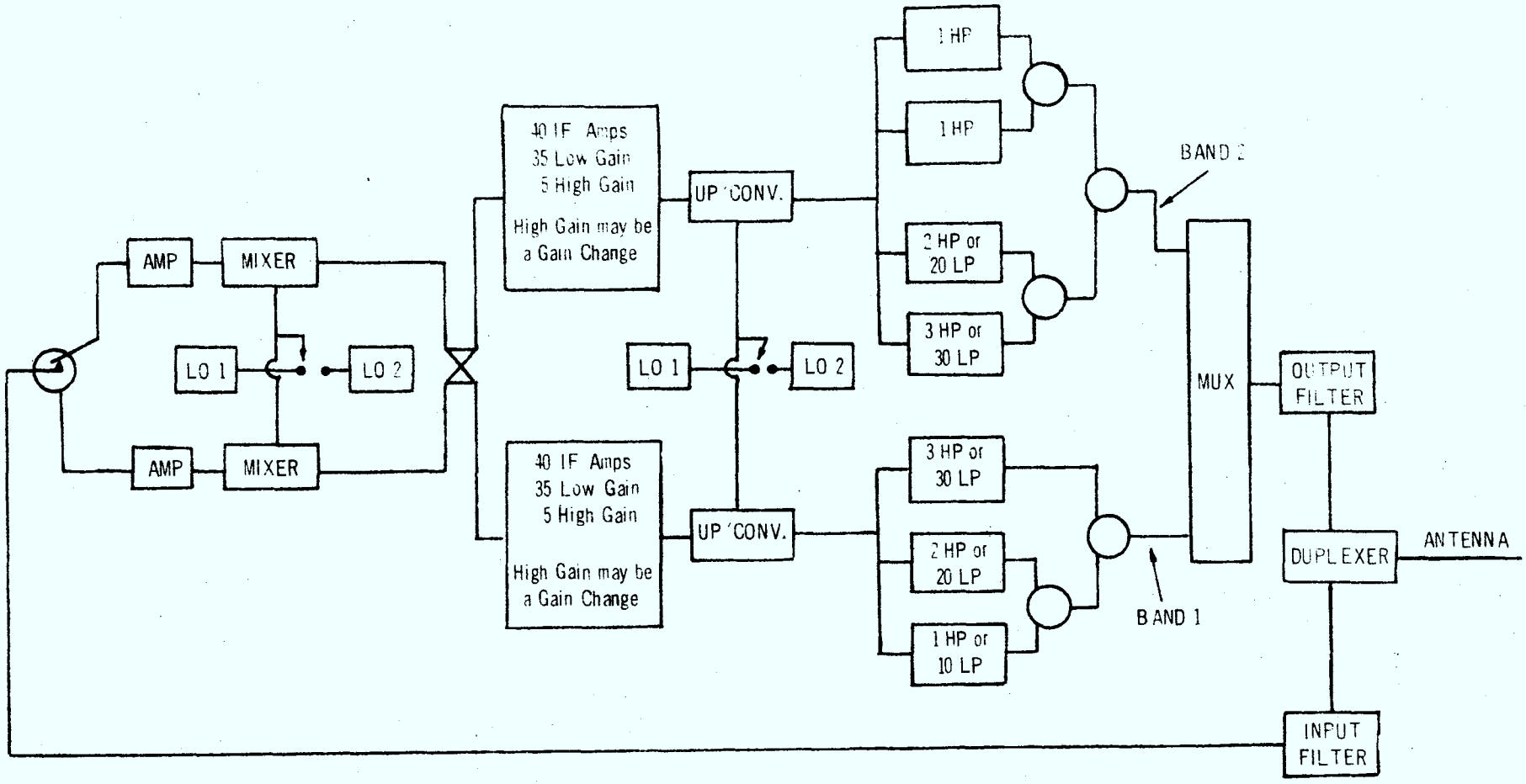

Figure 1 – Block diagram for the 300 MHz transponder

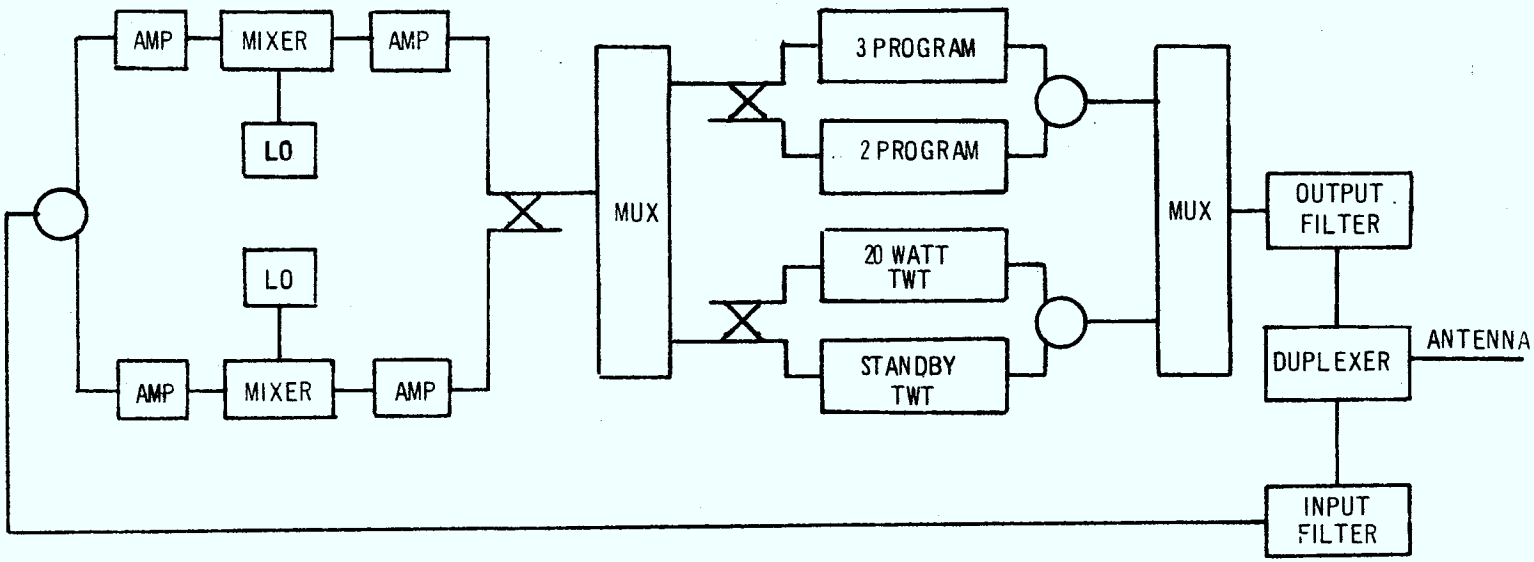

Figure 2 – Block diagram for the 2.5 GHz transponder

2.5 GHz SUBSYSTEM		
Type	Single Frequency Conversion	
Operation	F.D.M.A.	
Input	Uncooled Paramp	
Multiplexing	Graphite Fiber Epoxy Composite Waveguide Filters	
Weight	20 lbs.	
Services	Telephony	Broadcast
Number of Carriers	90	3
Output Device	TWT	Transistor
Output Power (dBW)	9.2	3.9
Eclipse	50 %	67 %

300 MHz SUBSYSTEM		
Type	Dual Frequency Conversion Fully Channelized at I.F.	
Operation	F.D.M.A.	
Input	Low Noise Amplifier	
Multiplexing	Interdigital Filters	
Weight	70 lbs.	
Services	Mobile	Transportable
Number of Carriers (Max.)	3	30
Number of Carriers (E.O.L.)	1	20
Output Device	Transistor	Transistor
Output Power (dBW) (Max.)	16.1	16.1
Eclipse	1	10

Table 2 – Specifications for the Dual-Frequency Transponder (Single Satellite Service)

RCA Research Laboratories

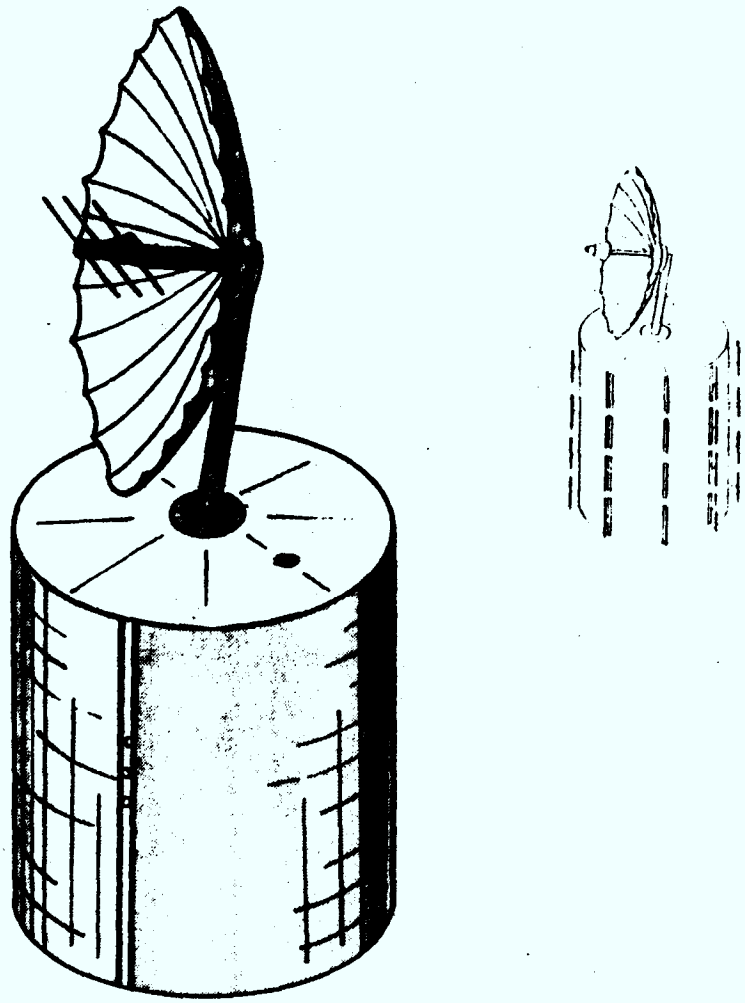

DUALBAND–DUAL SPIN SPACECRAFT

Figure 3

RCA Research Laboratories

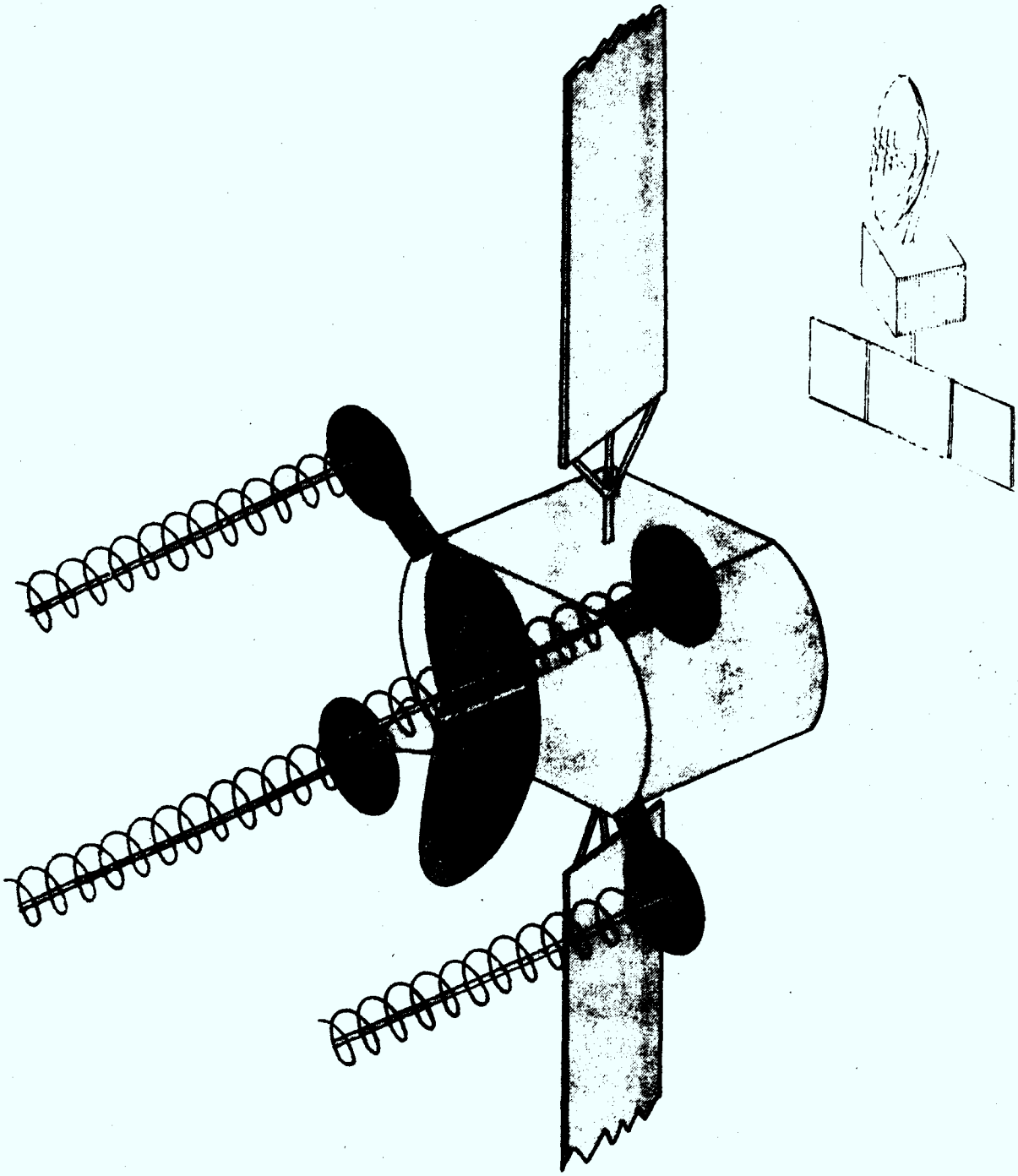

3 AXIS STABILIZED SPACECRAFT – CTS BASED

Figure 4

5. Conclusions and Recommendations

On the basis of the study it is concluded that not only is a dual band spacecraft feasible within the constraints of this mission, but that, by unique spacecraft design, attractive operating modes can be incorporated in the system, improving the cost effectiveness. Table 3 summarizes the traffic model achieved for the two design concepts detailed in the course of the study, while Table 4 gives their respective "top level" specifications.

The dual spin configuration (Figure 3) shows the greatest range of viable trade offs of the four concepts examined and thus the greatest adaptability to other mission constraints which might be developed. The design presented comes close to limiting simultaneously across all constraints imposed by the launch vehicle (weight, fairing limits on power, antenna height etc.) and thus appears to be simultaneously close to an optimum and an upper limit under the chosen and given constraints.

The 3 axis CTS based configuration (Figure 4) also fulfills the basic mission requirements but lacks some of the dual spin flexibility in design. It is basically weight limited and only limited advantage can be taken of the large power per pound coefficient (for power increases) made possible by the flexible solar array.

The other configurations examined show antenna gain limitations in the case of the electrical despinning or for the 3 axis ITOS configuration capabilities intermediate to those of the preferred designs. On the basis of the limited depth examination either of these last two configurations could probably fulfill the basic mission requirements.

Because of the proposed system operating modes all the designs have more severe thermal problems than normally encountered in communications spacecraft, in that the thermal sub-system must maintain the appropriate equipment environment despite a highly variable heat load developing at different locations within the spacecraft. This problem, particularly in the 3 axis configurations may require application of active thermal control techniques.

Budgetary cost estimates have been developed for a program based on procurement to a performance specification and following good commercial space practice. For a fully protected 10-year system (3 operational spacecraft plus standby) the spacecraft costs including development and profits are estimated to be $52.9 M.

			300 MHz		2.5 GHz	
			High Power	Low Power	Broadcast	Low Power
Single Satellite	Sun	BOL	3	30	3	90
		EOL, S.S.	1	30	3	90
		Min. Eclipse	–	–	2	45
Dual Satellite System		Sun	4	60	3	90
		Min. Eclipse	1	30	2	45

(a) 3-Axix

			300 MHz		2.5 GHz	
			High Power	Low Power	Broadcast	Low Power
Single Satellite	Sun	BOL	3	30	3	90
		EOL, S.S.	1	20	3	90
		Eclipse	1	10	2	45
Dual Satellite		Sun	3	50	3	90
		Eclipse	3	30	3	90

(b) Dual Spin

Table 3 – Traffic Capability Channels

- Diameter: 86'' • Height: 157.5'' / 227.5''
- 1820 lbs. in transfer; Initial on orbit 963 lbs.; End of Life: 813 lbs.
- Dual Band Transponder
- Canadian Coverage
- Power: 360 Watts E.O.L. (S.S.); Eclipse: 243 Watts
- 8-Year Life

Table 4(a) – Spacecraft Characteristics – Spin Stabilized Configuration

- Diameter: 71" • Height: 116" / 116"
- 1820 lbs. in transfer; Initial on orbit 948 lbs. End of Life: 800 lbs.
- Dual Band Transponder
- Canadian Coverage
- Power: 437 Watts E.O.L. (S.S.); Eclipse: 160 Watts
- 8-Year Life

Table 4(b) – Spacecraft Characteristics – 3-Axis Configuration

TABLE OF CONTENTS

Page

Page

LIST OF FIGURES

Page

LIST OF TABLES

1.0 INTRODUCTION

- Service to small earth stations
  - Mobile and Transportable
  - Fixed Stations
  - Radio Program
- Dual Band Space Segment

1.0 INTRODUCTION

1.1 Background

The work reported here under DSS contract PL3610-1-0622 Serial OPL2-0005, "Feasibility Study of a Two Band UHF Communications Satellite", under the design authority of the Department of Communications, is in concept, although not contractually, an extension of the "Consulting Services for Cost Studies of UHF Satellite Communications Systems" under DSS contract OPL1-0005. Because of this relationship, it is important to note the similarities and differences between the two contracts, and particularly that much of the present study is based on data developed in the course of the early contract.

1.2 The Previous Study (OPL 1-0005)

The earlier contract was basically to study a total system (earth and space segments) "intended for low capacity voice telephone services to remote areas of Canada". As such, the system was envisaged to comprise a large number of terminals accessing a satellite transponder in a single channel per carrier, frequency division access mode, with two classes of users considered in the traffic model. The study† required that two alternative systems be considered, one operating in the 225-400 MHz (low) band and the other in the 1500 MHz (high) band, with emphasis placed on the latter. Late in the course of the study, following the 1971 WARC meeting, it became apparent that the high band allocation would most likely be at 2500 MHz and some indications of the impact of this change were incorporated in the study. It must be noted that the

† This study report - "UHF Communications Satellite Systems, Vols. I, II, and III" is referred to as reference A throughout this report.

study considered implementation of the total traffic model in either one or other of the bands, although some consideration was given to a bus configuration capable of accepting a transponder at either of the two frequencies.

As a result of this first study, it was suggested that the traffic model could be implemented at low band as a 3 axis stabilized spacecraft based on the CTS technology; or at 1500 (or 2500) MHz as a dual-spin design. Considering the Thor Delta launch vehicle considered most likely to be available in the 1975 time frame (1550 lb transfer capability), it was suggested that the 3 axis design was weight limited and that lifetime would be limited by reliability and secondary propulsion fueling. As a result the lifetime was quoted as 5 years and no inclination correction was incorporated. In addition it was suggested that the required eclipse capability would not be fully met because of the weight limitations.

Reference A showed that the dual spin configuration was feasible at the high band with a reasonable weight margin for implementation, even with full eclipse capability. Both concepts developed in the first study made use of biased inclination at launch and reduced N-S station-keeping to minimize secondary propulsion fuel requirements.

It may be noted that the different configurations proposed for optimum implementation at the respective frequency allocations largely excluded the concept of a bus which could carry either one of the two transponder designs. It also may be noted that the study required the development of concepts for an <u>operational</u> system having twelve years of performance, which turned out not to be economically matched to the predicted individual satellite lifetimes. The main characteristics of

these two design concepts are summarized in Table 1.1 (from Reference A).

1.3 Present Study

In the presently reported study, the required traffic model is similar in concept i.e. providing low capacity telephone and radio program services to remote areas, and again two primary classes of users are specified, although four distinct types of signal are involved. However, the traffic model requires simultaneous implementation within two distinct frequency bands. Table 1.2 summarizes the traffic model in terms of number of channels and required single channel EIRP's for both these studies. The modified traffic model for the present study is in accordance with guidance provided by the Design Authority in the course of the study. It may be noted that there are special traffic requirements in the present study which make it necessary to define the number of simultaneous carriers present in the transponders and whether voice activation or push to talk techniques are permissible. This is discussed in more detail elsewhere.

The general scope of the study was reduced from that earlier, in that the tasks pertained only to the space segment. The details of the present study were modified from those previously, by the choice of a somewhat later implementation-launch period and the designation of the system as pre-operational, giving some flexibility in the system concepts.

1.4 Report Layout

The next section discusses launch vehicle capabilities and interstage requirements, extrapolating to the 1977-time frame of interest.

Section three discusses the system aspects and particularly the operational configurations which would provide the maximum flexibility

TABLE 1.1a - Spacecraft System Characteristics

Spin Stabilized Configuration	
Size	Height 55", Diameter 86"
Weight	1500 lbs (including 118.5 lbs margin)
Communications	1.5 GHz Transponder - Single Channel Multiple Access: 100 duplex, 5 simplex, EIRP: 37.5 dBW G/T : -2.4 dB
Coverage	All of Canada
Stabilization	Dual Spin - Favourable Moment of Inertia Ratio
Attitude Control Sensor	Spinning Earth Sensor
North South Inclination Control	Yes
Power	Body Array with 2 Batteries giving full Eclipse Capability
Telemetry	PM/PCM
Command	PCM/FSK/AM
Lifetime	8 years
Reliability	.660

TABLE 1.1b- Spacecraft System Characteristics

Three Axis Stabilized Spacecraft	
Size	Height 46", Diameter 71" × 55"
Weight	1500 lbs (including 76.6 lbs margin)
Communications	300-400 MHz Transponder - Single Channel Multiple Access: 100 duplex, 5 simplex, EIRP: 41.2 dBW G/T: -11.0 dB
Coverage	All of Canada
Stabilization	Double Gimballed Reaction Wheel
Attitude Control Sensor	Static Earth Sensor
North South Inclination Control	None
Power	Flexible Solar Sails with 2 Batteries giving 14% Eclipse Capability
Telemetry	PM/PCM
Command	PCM/FSK/AM
Lifetime	5 years
Reliability	.695

Service	Earth Stations					Space Segment			
	Number		Dia. (ft.)	G/T – dB/ K		Duplex Channels		EIRP – dBW	
	Min.	Max.		300 MHz	1.5 GHz	Min.	Max.	300 MHz	1.5 GHz
Quality – Fixed	100	400	5.5	–17	–1	20	60	19.6	15.4
– Transport	20	60							
Private – Fixed	20	50	5.5	–19	–5	20	40	19.5	17.2
– Transport	20	50							
Radio Program	20	80	6.5	–16	–1	1	5	29.3	25

(a) Traffic Model I – Previous Study (Reference A)

Band	Service	Eclipse	Carriers	Frequency Assignments	Channels
225–400 MHz	Mobile	100 %	1	1	1 Half Duplex
	Transportable	50 %	20	20	10 Duplex
2.5 GHz	Fixed	50 %	20	40	20 Duplex
	Program	100 %	2	2	2 Simplex

(b) Traffic Model II – Basic Two Band, Present Study

Table 1.2 – Traffic Models

in traffic capability without undue space segment penalty.

Section four discusses the general tradeoffs applicable to this program, and details the more important configuration alternatives.

Sections five to seven discuss the communications and other subsystems in some detail, with summary budgets of weight and power in section eight.

Section nine provides the budgetary cost indications for various configurations, while section ten gives the study conclusions and recommendations.

It may be noted that in accordance with the contractual requirements, much of the study material is an extension of that developed previously in Reference A. For the sake of brevity only portions of this background material have been incorporated in the present report. For detail in some areas, the previous study may be referred to. The primary emphasis in this report has been placed on those aspects of the spacecraft and its operations directly affected by the dual frequency nature of the communications subsystems.

2.0 LAUNCH CONSIDERATIONS

- Thor-Delta - 1977 Projected Capability - 1890 lbs
- 96" Fairing

2.0 LAUNCH CONSIDERATIONS

2.1 Requirements

The program guidelines require the feasibility study to be based on the capabilities of the Thor-Delta launch vehicle with a 1977 projection, as well as agreement with the Design Authority as to the specific range of parameters to be utilized in the study. The guidelines further require that the spacecraft be designed for maximum (communications) capability within launch weight limits and a target eclipse operation of 100%, with a reduced capacity if the weight is inadequate for 100% traffic during eclipse.

The selection of the design transfer orbit weight to be assumed for the study is extremely critical in terms of the actual achieved spacecraft capabilities. If the launch capability used is lower than that which will actually be available at the time of implementation/launch, potential traffic capability will be sacrificed and the economics, as shown by the feasibility study, will not be the best which could have been achieved. Conversely, if the launch capability is overestimated by the projections, the implementation program is likely to be penalized by vehicle development costs or a complete redesign invalidating the original study cost data. It may be noted that where the projections are conservative the actual excess weight capability can often be utilized for extra fuel (also used to take up remaining allocated weight contingencies), or occassionally in extra eclipse capability, but only rarely in additional communications capability.

2.2 Vehicle Selection

Figure 2.1 developed from the Delta Restraints Handbook (Ref. 1)†

† Delta Spacecraft Design Restraints - MCDONNELL DOUGLAS ASTONAUTICS COMPANY DAC61687 - October 1968; as revised August, 1972.

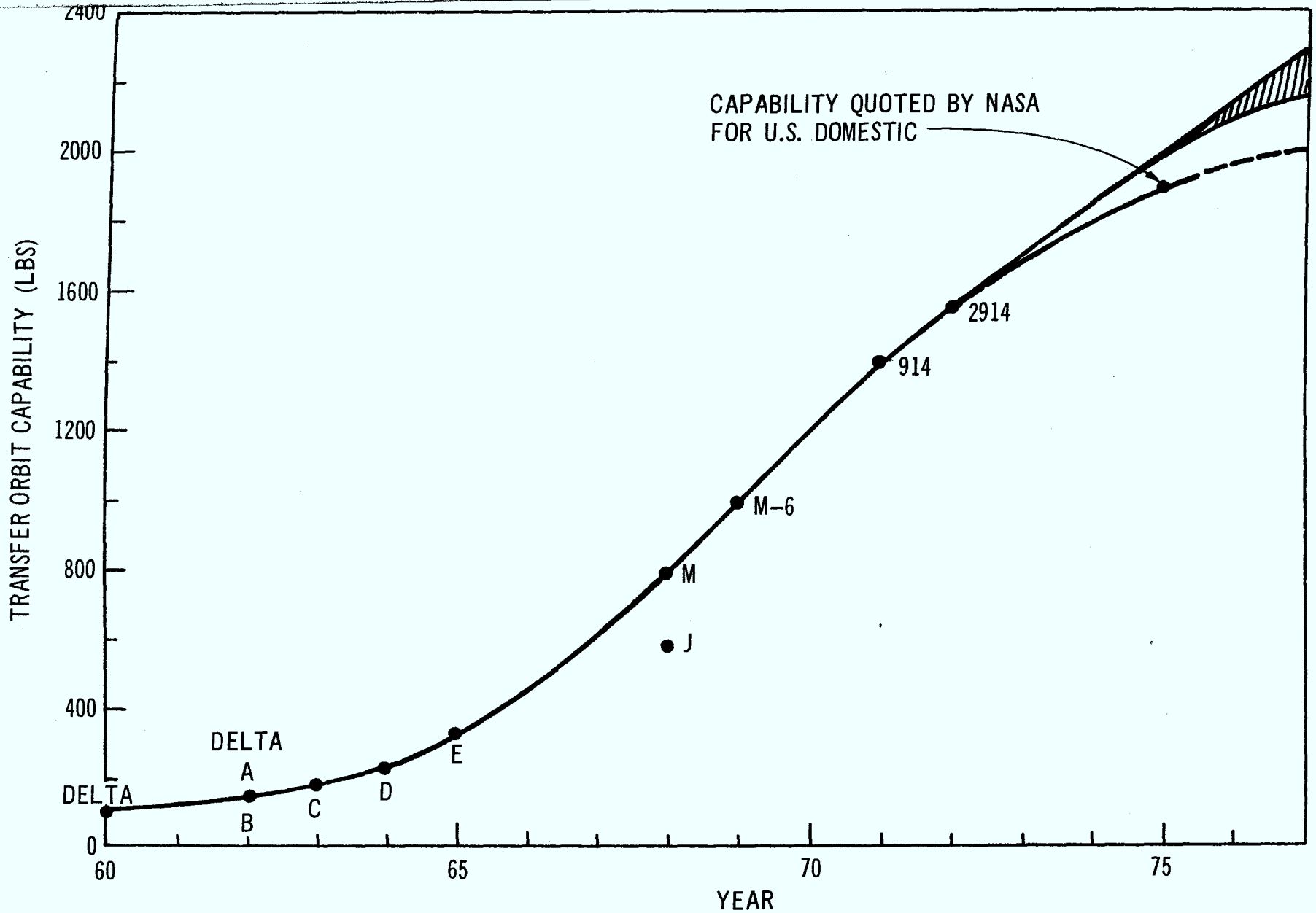

Figure 2.1 – Growth History Delta Mission Capabilities (ETR Geosynchronous Orbit)

shows the growth of the Delta capabilities (as of October, 1971) including the projection as to future capability. The curve is exceptionally smooth neglecting the "J" model which was coincident in time with the "M", the first of the long tank Thors.

The curve shows the 1890 pound capability suggested previously by NASA as available for US Domestic bidders, but withdrawn as this report was being edited. Although "withdrawn" by NASA, this projected capability is considered of extreme significance to this study. Indications are that NASA withdrew this option because of a concern for reliability of the 2914 vehicle and apparently not because of any belief that it could not be achieved. Thus the two year span between the U.S. domestic date of 1975 and 1977 of the present concept becomes of extreme significance to the probability of the higher capability being available.

Unfortunately the details of the launch vehicle modifications to achieve 1890 lbs are not known. It is known that several steps along the way to a 1750 lbs capability are involved as follows:

Design Modification	Transfer Orbit Capability Gained
a) Selection of high performance motors for the second and third stages and lowering the perigee injection altitude.	20 - 40 lbs
b) Replacement of the second stage motor, which has a 40:1 expansion ratio nozzle, with an identical motor but with a 60:1 expansion ratio nozzle. Such a motor is available (i.e. the Titan III upper stage - the Transtage motor, which is space qualified and has a demonstrated reliable flight experience). The change to the larger expansion ratio nozzle is feasible because of the addition of the 8 ft. diameter shroud for the second stage. The nozzle change would require a redesign of the interstage structure between the first and second stages at an estimated cost of 500,000	

dollars or less. (This change would be particularly simple if implemented concurrently with the planned first stage redesign). 40 lbs

c) Extension of the first stage solids to replace the current Castor II solids. Experience with solid rockets has shown that reasonable extensions in length can readily be achieved at a very nominal development cost and with a high reliability. Informal discussions between NASA Delta program office and manufacturers have confirmed the feasibility of this performance improvement. 100 - 125 lbs

d) Development of canted nozzles for the Algol solid rocket to replace the Castor II. The nozzle development is considerably more costly and complex than item c. 220 lbs

e) Redesign of the second stage tanks to an 8 ft. diameter and lightening of the second stage structure. 70 lbs

It is apparent that the extension to 1890 lbs transfer orbit capability would involve, at a minimum, these changes or refinements of them. It was a condition of the original NASA offer that the user pay the development costs. No estimates of these costs or the recurrent costs have been made public. Unofficial information suggests that the non recurrent costs are of the order of three and a half to perhaps five million dollars, which is not considered to be a major penalty to a multilaunch program. The possibility, of course, exists of sharing these non-recurrent costs between several users, particularly in the later time frames.

On the basis of these data, the choice is between the extrapolation of the curve to 1977, i.e. about 2000 lbs or to use the two year period as a hedge to ensure that the 1890 lbs capability is available. It may be noted that the former extrapolation, even if valid, probably

necessitates non-recurrent costs additional to those indicated above.

Within the feasibility phase of a program such as this, it is deemed appropriate to design to the 1890 lbs figure, at least until such time as further data are available or the mission objectives are in jeopardy through the 1890 lb weight limitation. At such a time, the spacecraft design for the mission could be extrapolated to give a weight requirement, and the decision as to risks made at that point.

Thus, an 1890 lb transfer orbit weight capability was used as a design constraint in this study. However it should be noted that the vehicle choice should be reconsidered at further points of decision, and could affect the choice of configuration. For example, should the Thor Delta not have its capability extended (for the U.S. Domestic or other programs), then the first user could be responsible for at least a significant portion of the non-recurrent costs (perhaps $3\frac{1}{2}$ million dollars). Should it be necessary or deemed more economical to revert to the 2914 Thor Delta or its update at that time, then based on the data of Reference A the dual spin configuration is probably more readily altered than is the 3 axis configuration and would retain a larger portion of the traffic model.

2.3 Spacecraft Attach Fittings

The Delta growth curve, as well as the variety of third stages used, has permitted development of a family of interstage or spacecraft attach fittings. At this point in time there is no fitting specified as available for the 1890 lbs vehicle; however it is possible to estimate a weight on the basis of available designs. There are several factors involved as follows:-

(a) launch interface. Many of the smaller attach fittings are designed to mount to the shoulder of the 3rd stage motor. At higher spacecraft weights the Delta office is reluctant to take spacecraft loads through the casing and this is likely to be prohibited for the present concept.

(b) spacecraft interface. The diameter at the spacecraft interface is critical not only in terms of loads, etc. but also in potentially restricting the apogee motor diameter, particularly the nozzle diameter, i.e. the expansion ratio.

(c) maximum load. All attach fittings are rated as to the maximum allowable load at a specified maximum center of gravity (CG) height above the separation plane and with assumptions as to spacecraft stiffness, etc. Thus a design exceeding either weight or CG height requires special analysis by the Delta office. Extreme deviations require analysis of the total vehicle/spacecraft dynamics.

Examination of the attach fitting family for the Delta shows only one fitting approaching the requirements of the 1890 lb launch. This is the 3731, a cylindrical unit 37" in diameter and 31" high. It is rated at 1200 lbs at a CG of 36" above the separation plane, and weighs 55 lbs. This attach fitting has the important feature of interfacing to the forward support ring of the TE 364 motor. This fitting is also available as the 3731A having a different spacecraft interface. The 3731A is rated at 1700 lbs at 40" above the separation plane, and weighs 61 lbs. The latest revisions to Reference 1 (August, 1972) also lists a new attach fitting, the 3740, with the same capabilities as the 3731A. Based on these data, preliminary calculations suggest

that 65-70 lbs should be allocated for the 1890 lbs capability at a CG close to that likely to be developed for a dual-spin spacecraft. It may be noted that in a maximum power dual-spin concept the CG will be about 45-50" above the separation plane in order to place the CG and C of Pressure near the same point (to minimize solar pressure torques). In any reasonable 3 axis configuration the CG will probably be lower than for a dual-spin design.

2.4 Fairing

The design is based on the 96" fairing shown in Figure 2.2 and this envelope has been used as the volume constraint for the spacecraft. This fairing, by virtue of its large diameter, provides the possibility of a stable dual-spin spacecraft configuration.

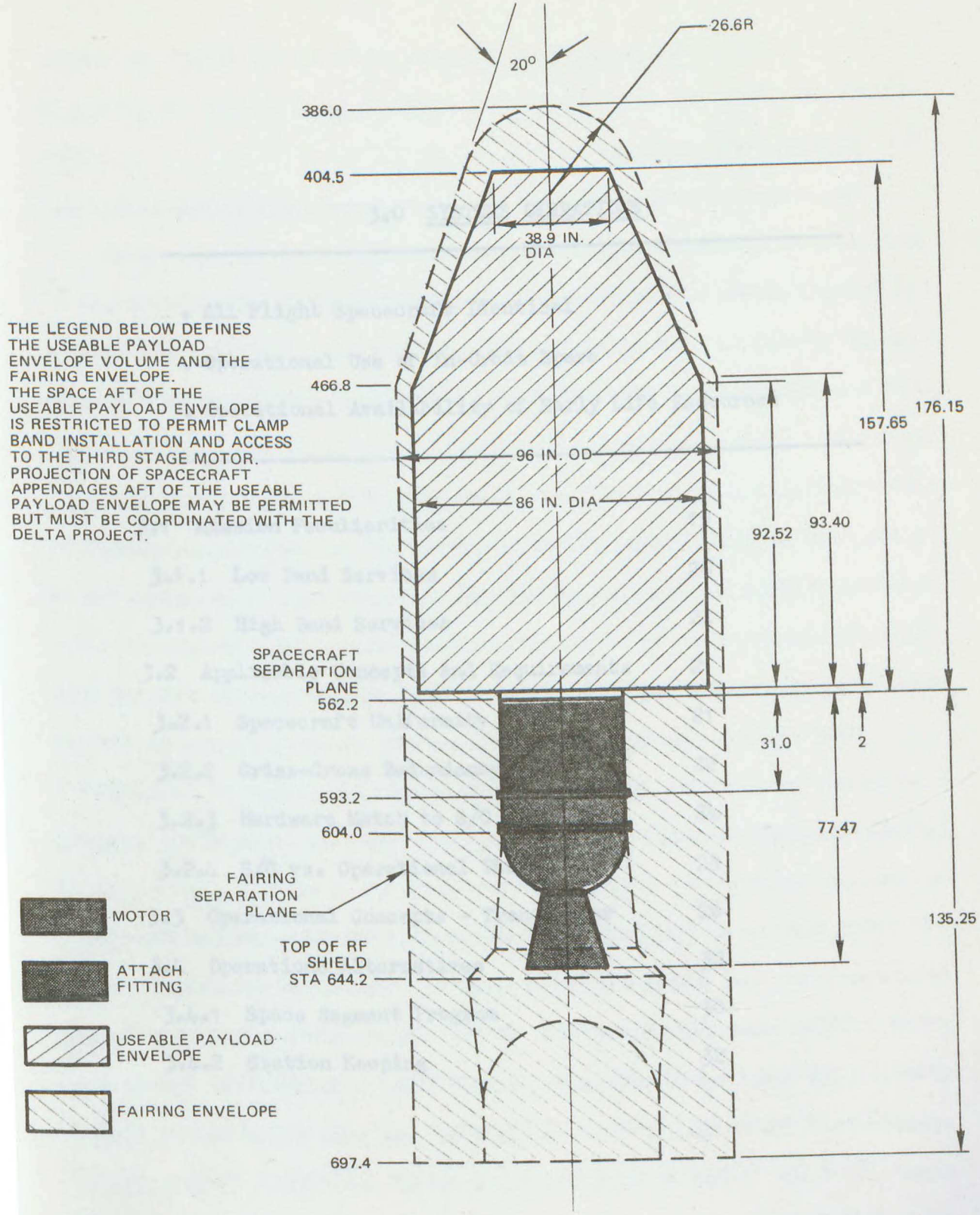

Figure 2.2 – Payload Envelope, TE-364-4, 3731 Attach Fitting

(From Delta Restraints &andbook)

3.0 SYSTEMS OPERATIONS

- All Flight Spacecraft Identical
- Operational Use of In-Orbit Spare
- Operational Availability of Early Life Resources

3.0 SYSTEM OPERATIONS

3.1 Mission Peculiarities

The nature of this mission is such that there are both opportunities presented for systems incorporating extreme flexibility of operation and unusual spacecraft limitations imposed. The opportunities develop because of the two band nature of the traffic model as well as the fact that the major portion of the traffic is telephony in the multiple access mode. If a mission is dominated by broadcast or other continuous service then the orbiting space satellite cannot be used for extra capacity because the service offered cannot be guaranteed on a continuous basis on account of eclipse outage and failure probabilities. Considering the statistical nature of ordinary telephony traffic, the protection satellite may be used to, either improve the grade of service availability for a given system capacity, or to increase the system capacity for a given grade of service. In the event of an eclipse outage or satellite failure the service would return to the lower but still acceptable capacity or grade of service.

Thus, because of the complex nature of this mission, much of the development for the concept of the design which normally is carried out at the single spacecraft level, (or at the communications link interfaces thereto), is moved up to the space segment level i.e. involves all in-orbit spacecraft. The nature of this distinction, and more significantly the manner in which it can be exploited in terms of operations, redundancy, eclipse capability and so on, is discussed in this section. Finally, although a traffic model has been presented by the Design Authority, it is recognized that in provision of new services, as is the case here, a

maximum of flexibility must be retained so as to approach optimization of spacecraft capabilities to match variations about the predicted traffic model.

3.1.1 Low Band Services

In considering telephony services near 300 MHz for small users, it is apparent that with the ground terminals of small diameter (~ 4 ft), the resulting directivity is poor. Thus two satellites spaced in the orbital arc at reasonable intervals cannot be operated at the same frequencies.

If however a suitable plan is utilized, the lack of directivity can be turned to an advantage in two ways. By operating the two satellites at greater than 18° separation in longitude, they are not simultaneously eclipsed, and thus by accepting the appropriate link loss associated with the pointing error, the traffic can be shifted between the satellites without change of pointing of the ground antennas. The shift may be accomplished by relatively simple spacecraft power switching or through frequency shifts assuming frequency agility of the ground station. Thus, it is possible to have a system incorporating satellites without eclipse capability but operationally appearing to the ground as a single satellite with full eclipse capability.

Alternatively, with an appropriate frequency plan, the system appears as a single satellite of double capacity and according to whether eclipse capability is present or not, either full (2 satellite) capacity through eclipse periods or full (2 satellite) capacity in sunlight and half (1 satellite) capability in eclipse.

3.1.2 High Band Services

The services at 2.5 GHz are associated with ground terminals of 4 to 6 feet diameter and because of the frequency, the ground antennas are more directive. In general, one also would anticipate that the telephony user in this band would be using the program distribution services. This, coupled with hardware restraints in the spacecraft (notably the receiver), makes it undesirable to split this traffic through two satellites. Nor can the traffic be as readily switched between satellites to ease the secondary power demand loads in eclipse, as it would require antenna repointing on the ground which is undesirable. However as will be seen in the later portions of this section, the location of this transponder with that for low band services opens up some potential flexibility in other respects.

3.2 Applicable Concepts and Requirements

The problem is to develop spacecraft design and operational concepts, within the program constraints, which permit advantage to be taken of these peculiarities of the mission.

3.2.1 Spacecraft Uniformity

From the program point of view, it is highly desirable that all spacecraft be identical. That such should be the case, is apparent when consideration is given to spacecraft design qualification and, especially, the problem of spares, particularly that of "in orbit" spares. In a mission such as this, the spacecraft may be required to perform different roles in the system and thus there is implied an excess of hardware (and weight) over that nominally required for redundancy. For example, if the two spacecraft in orbit are identical, then for low band two satellite

operations each must be on separate frequency assignments and each is carrying a hardware excess over its operational requirement. As discussed in sections 3.2.2 and 3.2.3 the penalty may not be severe and indeed may open further operating options.

3.2.2 Criss-Cross Redundancy

Considering a two satellite system, it is feasible to consider spacecraft configurations wherein there is effective redundancy by transponders of differing operating bands rather than by hardware at the same frequency, i.e. substitution. In the simplest case, assume that the traffic at low band had the same demands on the spacecraft resources as that of the high band. Then, if both transponders are incorporated in each spacecraft, and one band is powered up in each, a single transponder failure is corrected by switching of the traffic. In this case the satellites could be co-located in the orbital arc. This scheme is illustrated in Figure 3.1(a).

This simplest concept, of course, does not accomodate a spacecraft failure in that one band would be lost. Depending on the hardware utilized, the scheme can be modified to control the bands in traffic halves, in which case the system, in spacecraft failure, can revert to a single satellite (Figure 3.1 (b)), a practical necessity in any case where pre-operational concepts (single satellite) are considered viable.

It may be noted that criss-cross redundancy can also protect against battery failure of some configurations. For example, it was previously suggested that 2.5 GHz traffic should be through a single spacecraft, but that low band traffic could be split readily, for eclipse purposes. Then, if a battery failed in the initially high band spacecraft,

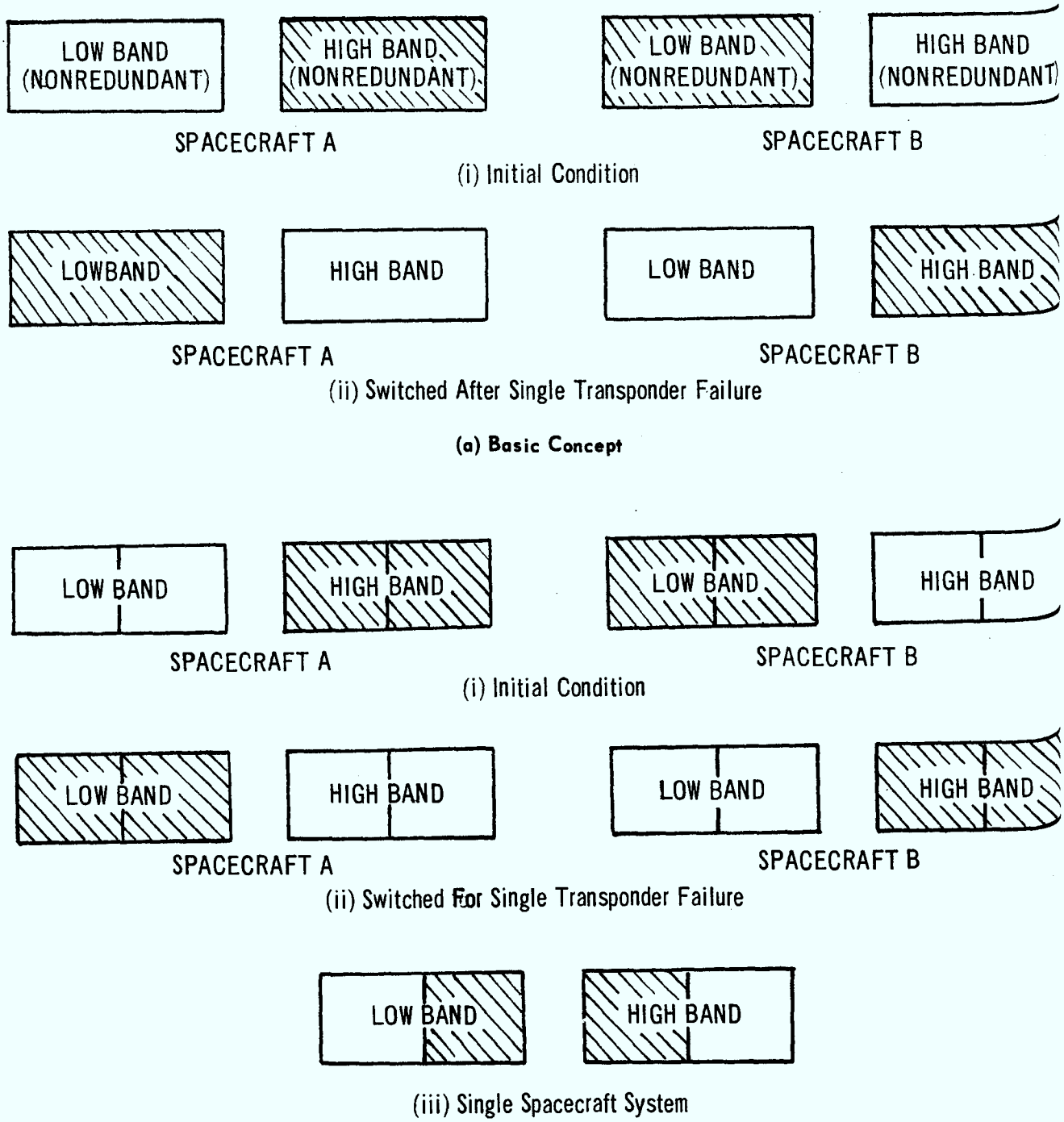

(a) Basic Concept

(b) Split Transponder Redundancy Concept

Figure 3.1 – Criss-Cross Redundancy Techniques

Note: Cross-Hatch – Indicates 'Powered Up'

the traffic is criss-crossed so that the high band traffic is now through the satellite having battery power. This is particularly effective if the spacecraft has a communications capability in excess of the basic model, in which case if the two are spaced by the eclipse interval along the orbital arc, in eclipse the nominally failed system will provide nearly the basic traffic.

The concept of criss-cross redundancy has not been utilized, as such, in the present designs, but rather a composite of substitution and criss-cross redundancy has been applied to obtain flexibility as well as high reliability. At low band, redundancy is provided for some services through non-identical substitutions. For example, a low power telephony amplifier capabable of 20 channels may be backed up by one capable of 30 channels. Then, on failure, redundancy is internally provided, as long as the prime power is available. If an exact replacement were required, then the criss-cross operation would be performed.

3.2.3 Hardware Match to S/C Resources

The non-identical substitution redundancy is incorporated in order to allow the maximum portion of the available power resources of the spacecraft to be utilized in the transponder. Thus, early in life, where the solar array output is high, units of larger communications capability are used and then smaller units substituted as the prime power decreases. It may be noted that, in periods of "short" eclipse, this also allows full battery charge to be used up to the point where the maximum permissible discharge rate is reached.

This matching of communications to resources is not unlike the situation in the Hughes 333 (Anik) where initially 12 channels can

be powered up decreasing to 10 at the end of life. The technique of implementation is, of course, quite different.

A problem of add-on capability vs the non-identical substitution technique applied here is that additional hardware weight may be required in other portions of the subsystem. Section 3.3 describes how the non-identical substitution can be implemented so as to provide additional flexibility.

3.2.4 S/C vs Operational Phases

The program documentation supplied by the Design Authority provided for the implemented system to have a "pre-operational" phase characterized by use of one spacecraft in orbit for a limited period i.e. no on-orbit spare. Such operations may also become necessary in the case of a spacecraft failure in the operational system.

As discussed in the earlier study, the designation of a pre-operational phase having the possibility of extended outages offers substantial advantages in system costs over an extended mission. The risk of outage is not excessive when one considers that in the early life of the spacecraft, the probability of failure is low and alternative communications techniques are likely to be available. The implications in spacecraft design are that the concepts are required to be applicable - preferably close to optimum solutions - for several possible system configurations or operating modes. Thus, the performance of the spacecraft, individually or as a system, was examined in the following circumstances:

1) Single spacecraft Sunlight - The objective was to meet the minimum traffic model operating as a true dual frequency design.
2) Single spacecraft - Eclipsed - To meet the minimum eclipse model;

if possible to configure secondary power so as to retain some communications service at either band for partial failure of batteries; and in any single battery failure to retain housekeeping.

3) Dual spacecraft system - Sunlight - To configure each single spacecraft so as to have capabilities of operating at full system capacity, without split network operation at 2.5 GHz.

4) Dual spacecraft system - Eclipse - To maintain high band traffic by battery power in eclipse and low band traffic by switching to the non eclipse satellite without earth station repointing.

5) Dual spacecraft system - Major failure. To verify that redundancy internal to a spacecraft plus "criss-cross redundancy" maximizes utilization of remaining resources.

6) Single and Dual - To examine the ability of the spacecraft to utilize a reasonable portion of early life excess power or to operate additional communications for short periods.

In addition to the objectives implied in examining the system in these configurations, it was desired to have the maximum flexibility of operation, thus allowing for variation of the traffic model, and, of course, redundancy such as to minimize the effects of single failure.

3.3 Operational Concepts - Transponder

A considerable amount of flexibility has been designed into the spacecraft by providing it with various sizes of output amplifiers. These amplifiers can be used with either low power carriers or high power carriers, in a variety of combinations. In addition, the amplifier used for the 2.5 GHz fixed terminal service is a dual mode

TWT that can operate either at full power or half power, as desired, thus effecting a reduced drain on the satellite resources.

The operational concept is to put one satellite in orbit along with an in-orbit-spare and have a standby on the ground that can be launched in the event that one of the satellites in orbit should fail. It is also assumed that the in-orbit-spare may be used, at the same time, as the operational satellite as well as during the eclipse period. In addition there is some period of time, before the launch of the second satellite when only one satellite is in orbit. This also occurs after the first failure prior to the launch of the ground stand-by. During this period of single satellite operations it is desirable to have some eclipse capability and thus, at least minimal battery power for this period, is carried. In the low band, in order to operate two satellites at the same time with both illuminated by up link signals it is necessary that they operate at different frequencies. However, it is also desirable to have only one standby on the ground, which requires that all satellites be identical. It is proposed that each satellite have two low band local oscillator frequencies which can be selected on command. Thus the standby on the ground can replace either satellite in orbit and, in fact, the two satellites in orbit can interchange their low band frequency assignments.

Typical loading for one satellite and two satellites in orbit has been worked out and is listed in Table 3.1 which pertains to a dual-spin configuration. For one satellite operation both sunlight and eclipse operation are shown. The goal for eclipse operation is that the minimum traffic model be maintained. At 2.5 GHz the minimum

FREQUENCY		300 MHz			2.5 GHz			House-keeping	Total (Watts)
Type of Channel		High Power	Low Power	Rec.	Broad-cast	Low Power	Rec.		
One Satellite Operational	Sunlight	1	20	–	3	90	–	–	–
		35	100	35	20	72	15	75	352
	Eclipse	1	10	–	2	45	–	–	–
		35	50	15	15	40	15	58	228
One Satellite Extended Service	Max. Power	3	30	–	3	90	–	–	–
		150	150	35	30	72	15	75	517
	2 Years	2	30	–	3	90	–	–	–
		100	150	35	20	72	15	75	467
	5 Years	2	20	–	3	90	–	–	–
		100	100	35	20	72	15	75	417
	6 Years	1	30	–	3	90	–	–	–
		35	150	35	20	72	15	75	402

Table 3.1(a) – Single Satellite – Dual Spin. (Upper figures refer to number of channels, lowe to power in watts)

FREQUENCY		300 MHz			2.5 GHz			House-keeping	Total (Watts)
Type of Channel		High Power	Low Power	Rec.	Broad-cast	Low Power	Rec.		
Both In Sunlight	No. 1	1	20	–	3	90	–	–	–
		35	100	35	20	72	15	75	352
	No. 2	2	30	–	–	–	–	–	–
		100	150	35	–	–	–	75	360
No. 1 In Eclipse	No.1	1	–	–	3	90	–	–	–
		35	–	15	20	72	15	58	215
	No.2	2	30	–	–	–	–	–	–
		100	150	35	–	–	–	75	360
No. 2 In Eclipse	No.1	1	20	–	3	90	–	–	–
		35	100	35	20	72	15	75	352
	No.2	2	10	–	–	–	–	–	–
		100	50	35	–	–	–	58	243

Table 3.1(b) – Two Satellites Operational – Dual Spin

traffic model has been exceeded during eclipse. However, for single satellite operation during eclipse, the minimum traffic model for the transportable service has not been achieved. It is not possible to augment the transportable service by reducing the service at 2.5 GHz because of the selection of an available TWT for operation at 2.5 GHz. For one satellite in sunlight the minimum traffic model is equalled at 300 MHz and exceeded at 2.5 GHz even at end-of-life summer solstice, the minimum power situation.

For two satellites in orbit typical loading patterns are as shown in Table 3.1(b). This is shown for both satellites in sunlight and for either one in eclipse. The two eclipse conditions are not the same because the 2.5 GHz service is not switched between satellites. For one satellite in eclipse, again at end-of-life summer solstice, the 2.5 GHz services are unchanged from sunlight conditions and the 300 MHz services are 3 high power and 30 low power, significantly above the minimum traffic model.

Also shown in this Table is the loading that can be achieved during periods other than end-of-life summer solstice.

The maximum loading for which hardware is provided is 517 W. This is obtained with 3 high power channels and 30 low power channels at 300 MHz and full service at 2.5 GHz. Other steps shown are 467, 417 and 402 watts although intermediate steps may be obtained at 485 and 435 watts by reducing the 2.5 GHz voice service.

It should be noted that all the power levels shown in the Table are calculated on the basis of 100% load factor, or in eclipse 100% duty cycle. For the 2.5 GHz services the D.C. power drain is fixed,

independent of the percentage use factor on the service. For the 300 MHz services the D.C. power drain will decrease when the loading is less than 100%. This is particularly true of the class C amplifier for a single high power carrier. When no carrier is present the D.C. drain drops to a very low level and thus the average power drain will be proportional to the percentage use factor on the channel. Similar considerations apply to the low intermod amplifiers however, the reduction is not proportional to the use factor. For example, when the amplifier which is sized for 20 low power carriers is used with only 10 carriers then the power drain will be less than the maximum of 100 watts, but more than 50 watts. Since no figures are available for use factors of the various channels the power levels shown are for 100% use factor. However, sufficient hardware is included in the design to allow the satellite to be fully loaded even under less than 100% duty cycle.

Table 3.2 provides equivalent data for a three axis configuration where advantage has been taken of the high prime power, and an effort made to reduce eclipse power demands.

3.4 Operations Alternatives

As mentioned previously, this study differed somewhat from its predecessor in that the system was to be based on ten years of operation and could incorporate a preoperational (as opposed to operational) phase. The nature of this distinction has been discussed extensively in Reference A and will not be repeated here in detail.

3.4.1 Space Segment Program

As shown in Reference A, it is desirable that individual spacecraft

FREQUENCY			300 MHz			2.5 GHz				
Type Of Channel			High Power	Low Power	Rec.	Broad-cast	Low Power	Rec.	House-keeping	Total (Watts)
One Satellite Operation	Sunlight	Number	1	30	–	3	90	–	–	–
		Power	35	150	35	20	72	15	110	437
	Eclipse	Number	–	–	–	2	45	–	–	–
		Power	–	–	–	15	40	15	75	145
One Satellite Extended Service		Number	3	30	–	3	90	–	–	–
		Watts	150	150	35	20	72	15	110	552
		Number	2	30	–	3	90	–	–	–
		Watts	100	150	35	20	72	15	110	502
		Number	2	20	–	3	90	–	–	–
		Watts	100	100	35	20	72	15	110	452

Table 3.2(a) – Single Satellite (3-axis Configuration)

FREQUENCY			300 MHz			2.5 GHz				
Type of Channel			High Power	Low Power	Rec.	Broad-cast	Low Power	Rec.	House-keeping	Total (Watts)
Both In Sunlight	Satellite A	Number	1	30	–	3	90	–	–	–
		Power	35	150	35	20	72	15	110	437
	Satellite B	Number	3	30	–	–	–	–	–	–
		Power	150	150	35	–	–	–	110	445
Satellite A In Eclipse	Satellite A	Number	–	–	–	2	45	–	–	–
		Power	–	–	–	15	40	15	75	145
	Satellite B	Number	3	30	–	–	–	–	–	–
		Power	150	150	35	–	–	–	110	445
Satellite B In Eclipse	Satellite A	Number	1	30	–	3	90	–	–	–
		Power	35	150	35	20	72	15	110	437
	Satellite B	Number	–	10	–	–	–	–	–	–
		Power	–	50	35	–	–	–	75	160

Table 3.2(b) – Two Satellite System (3-axis Configuration)

lifetime be close to the period of system operation or a convenient fraction thereof. Inasmuch as the space technology relating to operational communications spacecraft generally leads to a seven or eight year lifetime at good reliability (when spared), the ten year system stipulated is a moderate match. It is proposed that the program be designed around a two year pre-operational phase with no in orbit spare. At the two year point with (presumably) traffic build up, the second spacecraft would be launched. This would be followed one to two years later by the third launch. The system would of course be backed up by a spare held on the ground for use in the case of a launch failure or early in-orbit failure.

It is recommended that the actual strategy of launches and replenishment be adaptive to launch dispersions achieved and traffic growth; thus the program proposed is essentially that for procurement.

For a ten year system, under these constraints, procurement would be of three flight spacecraft and refurbishing of the prototype as ground spare, for a total of four flight worthy spacecraft. The minimum operational system under most favourable circumstances would involve two flight and one backup.

In the cost estimates, the prototype has been designated as a complete model suitable for refurbishing and flight, although in practice some of the transponder and solar array might be replaced by dummies during the qualification testing. Further, the program has been costed on the basis of smooth continuity of production.

3.4.2 Station Keeping

In developing the spacecraft budgets, and particularly those

associated with secondary propulsion, use has been made of biased insertion into orbit as was discussed in Reference A. The tanks for hydrazine have been sized (by weight) to provide capacity to increase the fuel load. This appears to be a satisfactory solution for this phase of design. As discussed elsewhere, the fuel load likely to be aboard at lift-off, coupled with a small dispersion of the launch vehicle trajectory, make it highly likely that fuel for closer inclination control would be available.

Two other alternatives exist. First, and particularly applicable for this case, where the two-satellite system provides communications through eclipse periods without the necessity of large batteries, is to trade batteries for fuel weight. Alternatively, if the system is truly designed for a ten year system with little capability carry-over beyond this, it is conceivable (but not recommended) that individual spacecraft lifetimes be reduced. This is somewhat similar to the 3 axis system concept of Reference A, although, there, the predicted reliability of the spacecraft tended to suggest the shorter design life.

4.0 DESIGN CONCEPTS AND TRADE-OFFS

- Viable Configuration Alternatives
- Significant Range of Performance Trade-Offs

4.0 DESIGN CONCEPTS AND TRADE-OFFS

4.1 Trade-Off Run Around Diagram

Optimization of a spacecraft design for minimum weight per communications channel is usually very time consuming. There are many variables that can be altered each of which has some impact on the spacecraft life, the traffic model or some other aspect of spacecraft performance such as eclipse capability. In an attempt to systematize this procedure and reduce the time involved in finding optimum solutions a set of "run around" charts have been prepared. A sketch of these interconnected charts is shown in Figure 4.1.

These charts can be worked through in a number of ways, the following description is a typical example. The output in the following example is the total payload related weight made up of the following contributions

1) Antenna weight
2) Power subsystem weight for the transponder
3) Battery weight for the transponder
4) Transponder transmitter weight
5) Transponder receiver weight

The inputs in the examples are considered to be

1) Operating frequency
2) Antenna gain
3) EIRP/channel
4) Total loss D.C. to R.F.
5) No. of channels
6) Percent eclipse operation.

The change in weight can be determined when any one of the input

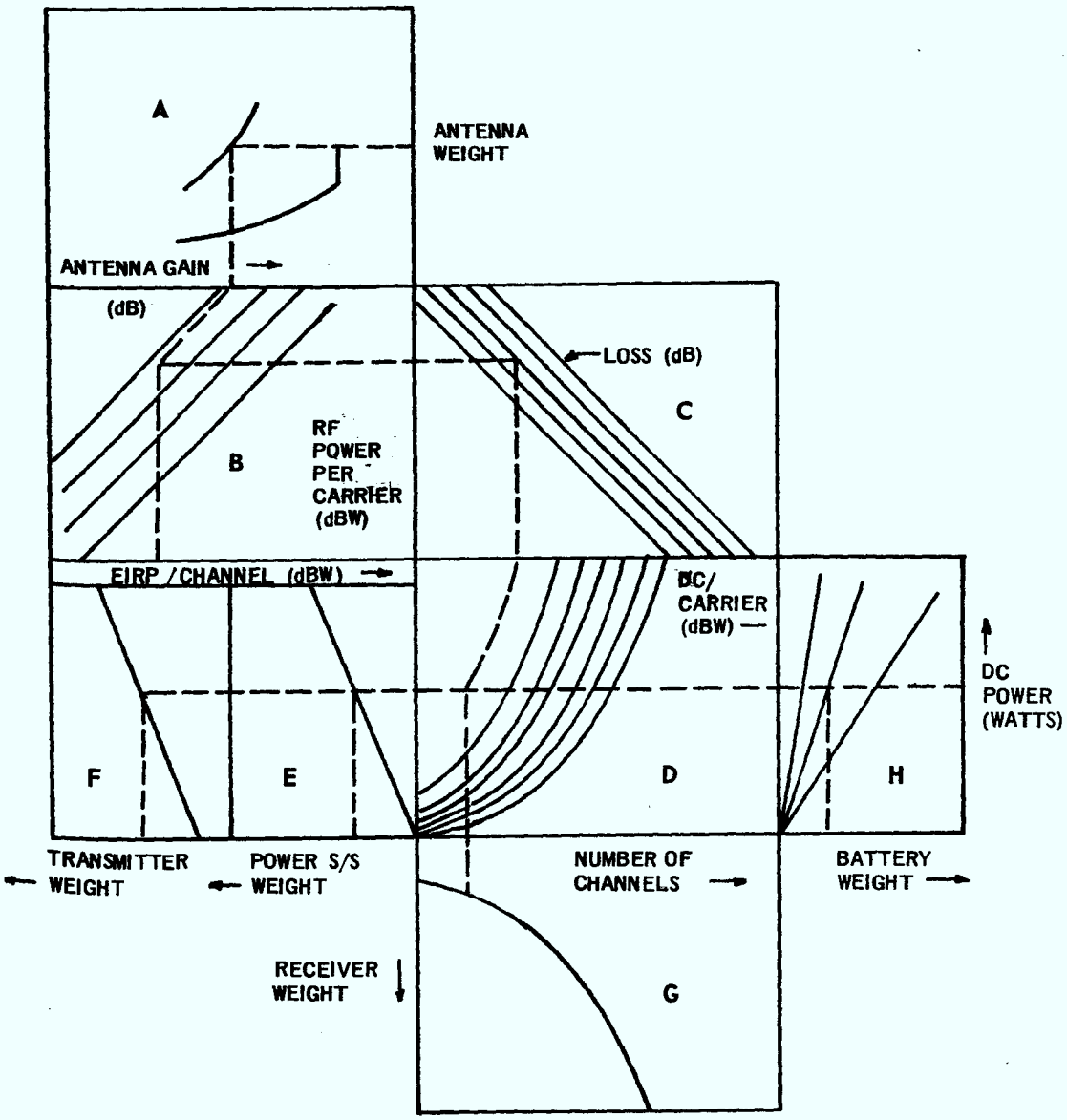

Figure 4.1 – Run Around Chart for Communication Payload Weight Estimates

parameters are varied (i.e antenna gain). A decrease in antenna gain, at the same total EIRP, must be made up with increased transmitter power. This results in a decrease in antenna weight but an increase in power subsystem, transmitter and battery weight. By running through the chart a number of times the antenna gain for minimum total weight can be determined. Similarly if the antenna gain is fixed (shroud limited for example), the traffic related weights can be developed.

To follow the example shown in figure 4.1 start with graph B. The diagonal lines are specific antenna gains. Follow the diagonal lines to the antenna gain scale and then follow the vertical dotted lines to the antenna weight curves on graph A. This antenna is considered to be a single antenna with a gain value at both 300 MHz and 2.5 MHz. At the bottom of graph B is the scale of EIRP/channel. From the desired EIRP value follow the vertical dotted line to the appropriate antenna gain line then go horizontally to graph C to intersect the total loss line. All losses from DC to RF are included in this number. From this intercept drop vertically to the DC/carrier scale. On graph D follow the curved line (constant DC/carrier) down to the vertical dotted line representing the number of desired carriers. The horizontal dotted line through this intercept gives the DC power in watts from which can be obtained the power subsystem weight (graph E), the transmitter weight (graph F) and the battery weight (graph H). The receiver weight can be obtained by extending the number of carriers down into graph G to intersect with the appropriate curve. The resulting weights are weight increments required for the service being considered. To get the weight increments for other services it is necessary to go

through the chart again for the other EIRP/channel and the other frequency. Care must be taken that the antenna weight and certain other contributions such as the broadband receiver are only added in once.

It must be noted that these run around diagrams derive the weight and powers associated directly with communications but do not give the secondary consequences of variations in traffic model. For example the diagrams do not indicate influences on structure weight resulting from array and transponder changes; telemetry and command complexity associated with the transponder configuration; or the despin mechanism weight and power for a given antenna mass and inertia. The errors resulting from neglect of these second order effects may be minimized by developing spacecraft bus requirements near the transponder design center.

It may be further noted that for greatest accuracy these diagrams must be developed for each configuration examined. The diagram of Figure 4.1 relates to dual spin configurations, although of course, with precautions portions of it can be used in other configurations.

4.2 System and Configuration Trade-Offs

In the course of this study variations of four different configurations or design concepts were examined to varying degree. Where appropriate, each concept was examined as to simplicity, ability to carry the basic traffic model, and ability to provide maximum resource utilization. In view of funding limitations and other considerations, extensive use has been made of the data developed in Reference A, with the major effort placed on the dual band aspects of the communications systems.

4.2.1 Spin Stabilized Configurations

(i) Dual Spin

Partly as a baseline reference point and, because up to the

present all operational communications spacecraft have been spin stabilized, it was felt that a solid evaluation of "spinners" was appropriate.

The general configuration offers basic simplicity at the cost of inefficient use of a relatively expensive solar array and usually the problem of transfering radio frequency power across a rotating interface. At high weights and powers, the configuration loses its attractiveness becoming power limited and generally only conditionally stable (e.g. Intelsat IV; Tac Sat, 777).

It was felt that with the 96" fairing as a power and diameter constraint, a design could be developed which would spin about its axis of maximum moment of inertia and would fulfill the mission requirements.

As shown in the next section, it was found that the concept, with some expansion of traffic and using limited inclination control (as discussed later) tended to limit on power and weight almost simultaneously. (More detailed designs would be required to verify that the stability concept is feasible).

(ii) Dual Spin/Electric Despin

In the course of program guidance, the design authority proposed an investigation of the applicability of electrical despinning of an antenna array based on the LES6 concepts.

Electrical despin of an antenna array particularly at 300 MHz avoids the necessity of mechanically despinning and erection of a large area antenna, as well as a better distribution of weight. It may be noted that electrical despinning techniques have been proposed

before for spacecraft such as Intelsat III but the problems of small user telephony, i.e. narrow band operation are much simpler than those for heavy trunking or TV traffic (wide bandwidth services).

The design concept developed was based on electrical despin of the 300 MHz traffic and mechanical despinning of the 2.5 GHz antennas. Against a set traffic model the electrical despinning, to be advantageous must provide an antenna gain comparable to that of the mechanical system and preferably compensate for the loss of solar array area associated with antenna slots and shadowing.

In the course of the study difficulties were encountered in developing firm gain predictions for electrical despinning and in particular it was found that the LES6 design could not be readily extended to the case of the larger antenna array considered necessary here. There is also some reason to believe that polarization problems are likely to become evident in the larger array and would result in effective gain decrease. Thus although the basic budgets are given in this section, it is not considered as an established alternative configuration for this mission.

One area of potential concern in the electrical despinning of antenna arrays has been investigated - namely the question of shadowing of solar cells. Where, as in LES6, the antenna elements are mounted above the surface, the elements tend to shadow at least a few cells over a portion of their area. The areas involved are generally small and intuitively the loss in power should also be small. Figure 4.2 from a paper by Mann and Dubey* shows how the output of a 50 cell series string varies

* A.E. Mann, M. Dubey, "Design Considerations of the Solar Simulator", Proc. 15th Annual Power Sources Conference Fort Monmouth 9-11 May 1961.

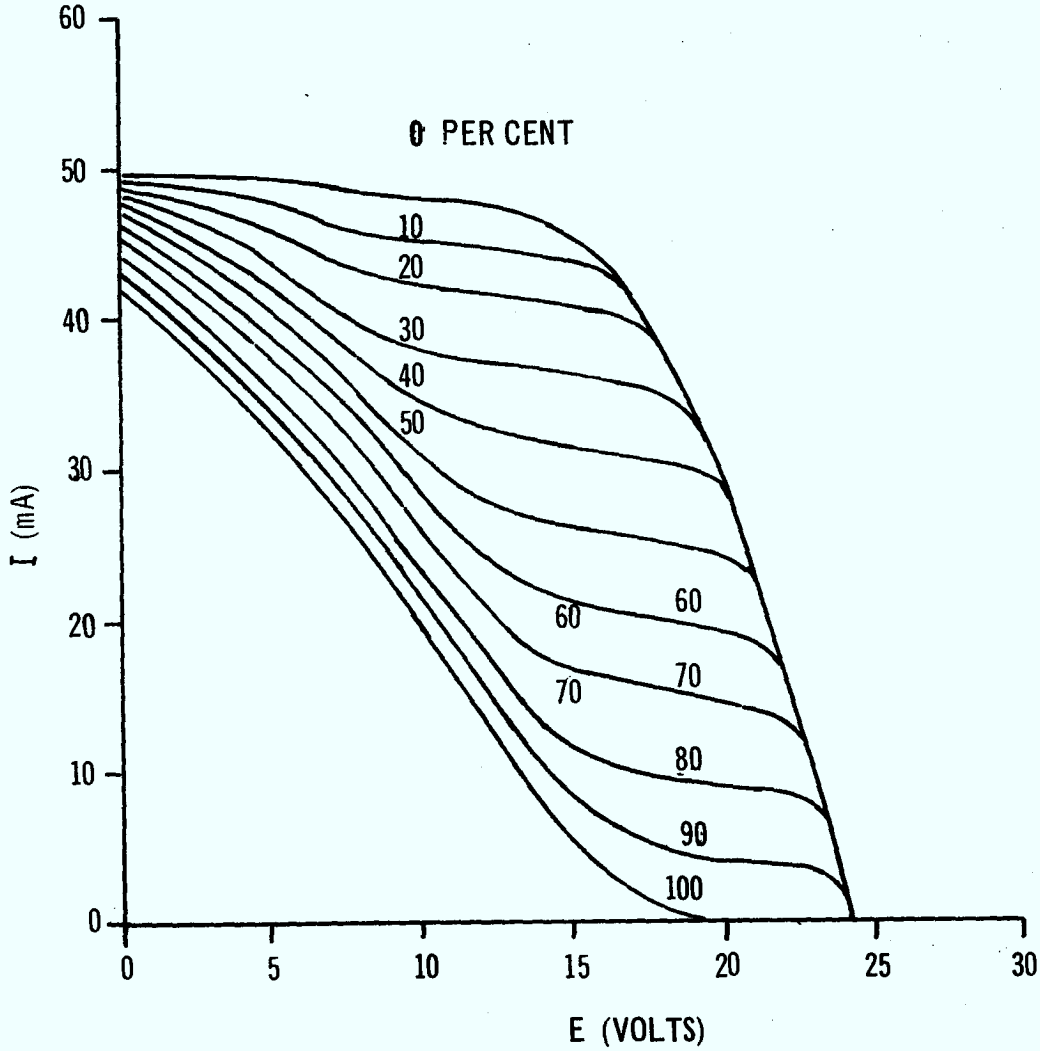

Figure 4.2 – Effect of Shading Portion of One Cell in Matched 50-Cell Series String

as the percentage shaded of a single cell in the spring. It shows the output dropping to 50% when a single cell is shaded. Of greater significance is the fact that with even 10% shading of a single cell there is a significant reduction of output of the string. To put some perspective on this if it is assumed that the cells are 1 cm square or 1 cm by 2 cm, then 10% of the area represents a line shadow 1 mm wide. This approximately 1/25 inch wide line is quite comparable with a wire antenna element.

Thus shadowing of the solar array and the effects on power must be considered. In practice antenna elements are half wave dipoles and thus will shadow many cells. According to the cell layouts, panel configurations and their relation to the shadowing elements, the effects may be large or small.

Assuming the presence of the shadows there are several techniques which can be used to minimize their effects on the power subsystem, although each involves some penalty.

(a) orient strings so as to lose a string rather than degrade several strings. This is essentially the ISIS technique where the cell Strings of a panel are more or less aligned radially to the large booms. In the design here it may be noted that the large number of antenna elements may dictate loss of several strings which becomes significant.

(b) use series/parallel arrangements in the strings. This is effective if the cells are arranged so that the cells of a row are not all shadowed at any "operational" sun orientation. Except possibly for the immediate region of the antenna supports, the cell layout to achieve this is not likely to be excessively complex. It is also a procedure to protect against single cell failure.

(c) protect cell strings by diodes which act to by-pass shadowed

cells. This technique has been used in "Surveyor" to protect small areas of panels, but applied on a large scale would significantly add to cost, complexity and weight.

It may be noted that if the antenna elements are fixed above the solar array surface (not erectable) the basic cylinder diameter is reduced and thus the available prime power is reduced. Then loss of cell area over the drum by slot antennas if further aggravated by shadowing loss can produce a significant power problem. The broad alternative of flush antennas allows full use of the diameter but results in a reduced cell area and again potentially a power problem.

4.2.2 3 Axis Configurations

Three axis stabilized configurations are of particular interest as alternatives when one or more of the following are required:

- High power
- Complex antenna(s)
- High accuracy pointing

In turn for these advantages, penalties tend to occur in complex erection techniques (thus weight and reliability hazards) and in thermal control. Mechanical motions are still involved in "on orbit" operations including reaction or momentum wheels, solar array orientation and antenna pointing. There is also the problem (as in despun platforms) of power transfer across a rotating interface.

Fundamentally the attitude control of a 3 axis design is closely equivalent to the attitude determination and despin subsystem of a spin stabilized spacecraft yet the latter is generally considered as the more reliable.

(i) CTS based 3 axis configuration

The launch sequence of spinner and body stabilized spacecraft are identical up to and including injection into final orbit. The despin, and attitude acquisition in 3 axis, is of course more complex for the body stable design than the 2 axis acquisition scheme for the spinner.

In this study, a 3 axis configuration based on the CTS was examined. This configuration tends to be the preferred solution where a very high power is required. However in operational communications missions, if there is a requirement for high percentage of eclipse operation, it is difficult to find weight for adequate batteries.

Because of the amount of CTS data available, a detailed evaluation of the concept could be developed with only moderate effort, although where considered appropriate, subsystem performance requirements were eased (e.g. in the Attitude control subsystem the pointing was relaxed (See Reference A)). The prime emphasis in this study was in the determination of the alleviation in weight problem provided by the launch change and, of course, the implications of two band operations.

(ii) Rigid panel 3 axis configuration

At power levels lower than CTS but higher than a simple spinner, there is a class of 3 axis designs featuring a rigid sun oriented array. Such a configuration has been proposed by RCA-Astro Electronics Division for the U.S. Domestic System. As this proposal is presently under consideration by the FCC, (essentially a competitive situation) and contains proprietary data of RCA, full details are not presently available. However some general data have been obtained and offer some indications of the design concepts. It may be noted that in order to permit valid

comparisons with the designs detailed here, the budgets have been modified to the same format, but as is apparent there remain some significant discrepancies which have not been reconciled at this time. In the weight budgets, the rigid panel mechanism penalty may be compared to that of CTS as well as the incremental lbs/watt of additional power.

4.3 Inclination Fueling Concepts

In the trade-off concepts developed in this section, all the baseline configurations make use of the biased insertion - reduced inclination capability developed in Reference A. Thus in most cases, the budgets refer to a design fueled for launch vehicle dispersions, station acquisition (including reorientation for AKM firing), eight year fueling for E-W station keeping and attitude control, and four year inclination fueling. The secondary fuel tankage is however sized for additional fuel up to approximately half the design weight contingency. This fuel, if put aboard, coupled with that saved by nominal launch dispersion (rather than the 3σ limit) would give close to full ($\pm$ 0.1°) inclination capability.

It is considered that the fueling is an area of significant trade-off which should be resolved in any program definition phase since it interacts with received flux density and ground station parameters as well as interacting with coverage in the northern limits. As shown in the next section, tighter station keeping can be readily traded against the eclipse capacity. Thus in the two satellite operational system where "eclipse" capability is provided through operational techniques, battery capacity is of less importance and could be reduced in favour of full NS station keeping.

In the present study, the full implications of reduced NS station

keeping have not been investigated to the depth performed in Reference A. In particular the change of upper band frequency from 1.5 GHz to 2.5 GHz has not been detailed. Should it be desirable to plan on reduced inclination control based on either weight or eclipse capabilities, it is feasible to reduce traffic at 2.5 GHz increasing the per channel power to compensate for the effective loss in ground station pointing. Alternatively the prime power allocated to high band services could be increased to produce the same compensation.

4.4 Dual Spin Analysis (Mechanical)

It may be noted that the data presented in this and following parts of section 4 are intended to indicate the range of trade-offs permitted by the selected configurations. Thus these data are not always strictly comparable with those presented as budgets for selected configurations (Section 8). The latter have in general some back off in budgets so as to provide implementation margins appropriate to the feasibility study phase of a program. In a sense this section is intended to indicate the breadth of the shopping list of capabilities whereas section 8 is more or less a "design center" for budgets including those for costs.

Table 4.1 summarizes the weight and prime power budgets for several variations of two general classes of dual spin configuration. The first columns are based on the standard traffic model (STM) as provided in the work statement, while the last are based on increasing the traffic capability up to the limits of the prime power available. This fairing limited power is determined by the cylinder between the separation plane (3731A attach fitting) and the start of fairing taper (92.5"). For

DUAL SPIN SPACECRAFT – 8-YEAR LIFE

	Power for Minimum Traffic		Shroud Limited Power	
Initial on Station Weight	963 lbs.	963 lbs.	963 lbs.	963 lbs.
Bus Weight	722	842*	831	831
Available Payload	191	121	132	132
Antenna	42	42	42	42
Transponder	90	66	66	70
Design Margin	59	13	24	20
Power – E.O.L. (Watts)	290	290	375***	375
– Eclipse	290	228	375	375

* Full inclination fueling
** Additional traffic capability
*** Margin 85 Watts

Table 4.1 – Weight and Power Budgets

present purposes the antenna is assumed limited to a radius equal to the available height of the fairing conical section (62.5").

Column (1) is a basic design for the specified traffic model and an eight year spacecraft lifetime, with full eclipse capability. It will be noted that there is an ample weight design margin. Throughout this and following discussions, a 5% of transfer capability (91 lbs) weight contingency is considered as a basic spacecraft subsystem penalty, as differentiated from design margin which is available for use at this phase of a program. (Other philosophies are sometimes used elsewhere, for example:- 10% of initial on station weight (96 lbs here); or more conservatively 7% of transfer weight (128 lbs) is used for highly experimental programs.) Thus some margin is desirable but not essential in defining program feasibility).

Column 2 reflects the same approach except that the eclipse capability has been reduced in accordance with the design authority guidance of July 10, 1972. The extra weight could be applied to give additional fuel for full inclination control as here, or for a 10 year mission fueling. The latter is felt to be of limited interest because of the implications in system reliability.

Column 3 is based on the specified traffic model but fairing limited power as defined previously. It will be noted that the battery is also sized for full power capability and thus exceeds the eclipse demand. The weight margin of 24 lbs and power excess of 85 watts are indicative of the growth potential.

Column 4 shows an excess capability over that specified which is a simplified attempt to apply the excess power. This or a somewhat similar

distribution of the excess power is a reasonably attractive starting point in that a realistic weight margin remains.

It is of course feasible to reduce the battery capacity of (4) and distribute the weight against fuel or lifetime, but the final distribution should be made against a detailed consideration of the traffic model, system implementation phases (pre-operational, operational) as well as the desires to make use of early life power and to provide traffic flexibility.

In the course of the study several other dual spin configurations were examined based on trading the excess prime power such as in (3) against antenna gain. It was found that (3) could absorb about a 2 dB loss in antenna gain, giving a potential weight saving of about 10 lbs. The main interest was in the possible gain in antenna simplicity - which was minimal, and whether despun weight could be reduced to aid stability. The other question was whether the reduced antenna gain requirement would enable the application of electrical despinning at 300 MHz as is discussed next.

4.5 <u>Dual Spin Analysis</u> (Mechanical/Electrical)

In analysis of the implications of electrical despin of antennas, it was felt appropriate to compromise the concept to the extent of retaining the mechanical despin for the 2.5 GHz services. Thus the spacecraft retains a relatively large antenna above the cylindrical body Figure 4 and exhibits the problems of despun weight and a rotary joint although of less severity than those of the dual-mode antenna discussed previously.

The lack of precise data on the performance of the electrically despun antenna prohibits the development of accurate budgets for this configuration. Table 4.2 is indicative of the trade-offs which are necessary. The form of the budgets is different. First it is apparent that the design is likely to be power limited by virtue of the antenna

RCA Research Laboratories

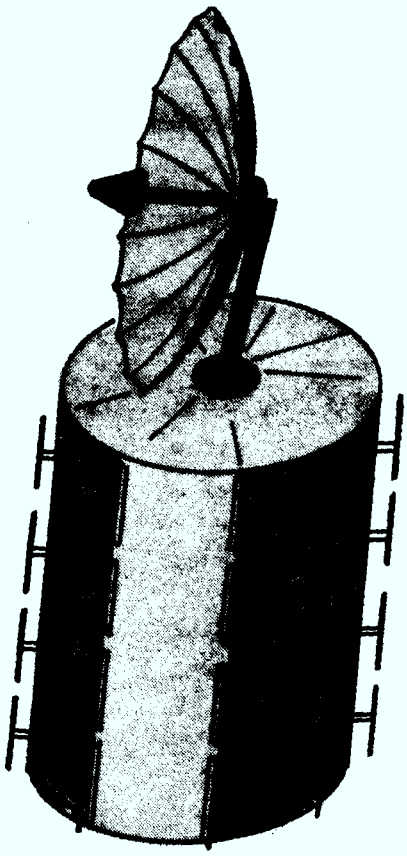

DUAL-BAND SPACECRAFT

ELECTRICAL/MECHANICAL DESPIN

Figure 4.3

TABLE 4.2(a)

Power/Traffic for Electrically Despun Low Band Services

Spacecraft prime power*	315	watts	
2.5 GHz demand (basic traffic)	50	watts	
Housekeeping	75	watts	
Lo Band Budget			
DC power available	190	watts	
Receiver and drivers	45	watts	
Net power for output stages	145	watts	
RF power out (70% efficiency)	100	watts	20 dBw
Output lossess			1.8 dB
Antenna net gain† (from Section 6)			13.9 dB
Low band EIRP available			32.1 dBw
Minimum Traffic Model Requires			33 dBw
Possible Traffic distribution for 32.1 dBw			
Channels 15 low power (18 dBw)	-		29.8 dBw
1 high power (28 dBw)	-		28 dBw

* based on spinner configuration shroud limited power less allowance for smaller diameter and slot area loss - no shadowing loss.

† reference transponder output

TABLE 4.2(b)

Mechanical/Electrical Dual Spin Budgets

Traffic/High Band Basic Model
Low Band 15 low power 1 high power

Power watts	315	
Array height	92.5"	
Lifetime years	8 years	
Eclipse capability	Full	
Initial on Station Wet Weight		963 lbs
Structure	105 lbs	
Thermal	20	
Elect. Dist.	20	
TT&C including Ant.	34	
Solar Array	105	
Battery	100	
P.C.U.	30	
AD&D	35	
P & O Dry	30	
Fuel-Basic	60	
- Inclination	90	
AKM Case	80	
Balance	6	
Contingency	91	
Bus Weight		806
Available Payload	157	
Antenna - High Band	20	
- Low Band	55	
Transponders	60	
Design Margin	22 lbs	

gain achieved.

While there are several alternatives in testing feasibility of a given concept (e.g. producing demands on power or antenna gain), it seems appropriate to start here with the antenna gain realizable (See Section 6) and the prime power available and thus determine the possible traffic. For trade-off purposes, it has been assumed that the spacecraft is required to carry the minimum 2.5 GHz traffic*, only power in excess of that for this requirement and the housekeeping demands being available for low band services.

The available power has been taken as that available from the fairing limited cylinder of a diameter allowing for the antennas protruding from the surface**, and allowing for loss of array area associated with antenna slots (but not shadowing loss). Thus the basic array power is about 315 watts, with about 190 available for low band services. At typical efficiencies there is a total EIRP of 32.1 dBw available for low band services which has been assigned as shown in Figure 4.2(a).

4.6 <u>3-Axis Spacecraft-Analysis</u>

This preliminary budget for a 3 axis spacecraft is based extensively on the CTS design and is primarily intended to ascertain the extent to which the increased Thor Delta capability alleviates the weight problem of 3-axis design developed in the previous study. (Reference A). Allowances are also made for the increases in weight associated with the dual frequency nature of the spacecraft. Table 4.3 gives the budget.

Assuming the antenna gain achieved is about the same as for the spinner, the design margin is about plus 7 lbs. When compared to the

* This neglects TWT availability and similar factors.

** Alternatively if may be possible to erect elements against a spring load utilizing the "g" forces associated with spin. This would permit full shroud utilization for array.

Launch Capability	28.3 Inclination	1890 lbs.
Attach Fitting		70
S/C in Transfer		1820
Apogee Motor – Based on CTS		
ISP 284 Mass Fraction 0.915		
AK Fuel		857 lbs.
Casing		80
AKM Total		937 lbs.
Initial on Station Weight Available		963 lbs.
Bus Weight		824
Payload Available		139
Antenna Estimate		42
Transponder		90
Design Margin		+12 lbs

Table 4.3 – Preliminary Budget – 3 Axis

3 axis design of the original study, the major changes are a result of the increase of lifetime from 5 to 8 years, i.e. in fueling and in eclipse of the traffic model.

4.7 Alternative 3-Axis Concept

As a potential "bus" for a 3 axis stabilized communications satellite, the CTS spacecraft design has some disadvantages. These can be traced to the basic requirements of the CTS program, i.e. to demonstrate technological advances and to act as a test bed for several experiments.

A new family of communications satellite designs are currently being studied in the U.S.A. that are closer to the requirements of this study. At least three major aerospace companies (RCA, GE and Fairchild) have 3 axis conceptual designs based on the 1890 lb Thor-Delta launch. These designs are aimed at providing a 24 channel 6/4 GHz satellite for the U.S. Domestic Satellite market.

The RCA Astro Electronics Division in Hightstown, N.J. concept is based on a bus derived from their Tiros M, ITOS designs. A satellite design employing these concepts was reported on at the last AIAA Comm. Satellite Conference*. RCA Limited has collaborated in this design by defining the communications payload (Antennas and transponder). As more detailed knowledge of this design is available to RCA Limited that other competitive designs, the following information is offered as an example of a serious and moderately detailed attempt to optimize a 6/4 GHz communications satellite for an improved Delta Launch. (Table 4.4)

---

* Stabilize Attitude Control for Synchronous Communications Satellites
J.E. Keigler, W.J. Lindorfer, L. Muhfelder.

Paper delivered at the 1972 AIAA Communications Satellite Conference.

Table 4.4 Typical Major Characteristics

Power:	500 watts DC
Solar Array:	High rigid solar panels, single axle rotation.
Batteries:	Nickel Cadmium for full eclipse
Stabilization:	Bias momentum with magnetic torquing and hydrazine jets.
Accuracy:	0.1° Pitch and Roll, 0.3° Yaw
Lifetime:	7 years
Station Keeping:	± 0.1° NS ± 0.1° EW
Antennas:	2 elliptical dishes 60" × 40" 2 elliptical dishes 30" × 15"

The physical configuration of their proposed design is shown in Figure 4.3 As may be noted the spacecraft body is a relatively compact and therefore light structure. The solar panels are folded in the launch configuration so that they provide the necessary power for the spinning transfer orbit phase, which leads to a minimum of extra weight for components used only in that phase.

Table 4.5 gives the weight budget as given by RCA-AED for that design, and is of course not compatible with a design for the hybrid mission. Noteable are the apogee motor data which appear very conservative possibly because of ejection mechanisms, and the small design contingency designated.

Table 4.6 is developed from the budgets given by AED, revised to more clearly reflect the hybrid mission and to permit a comparison with the other budgets of this report. However the original data have been retained to the greatest extent possible.

The budget clearly reflects the high power available from an oriented

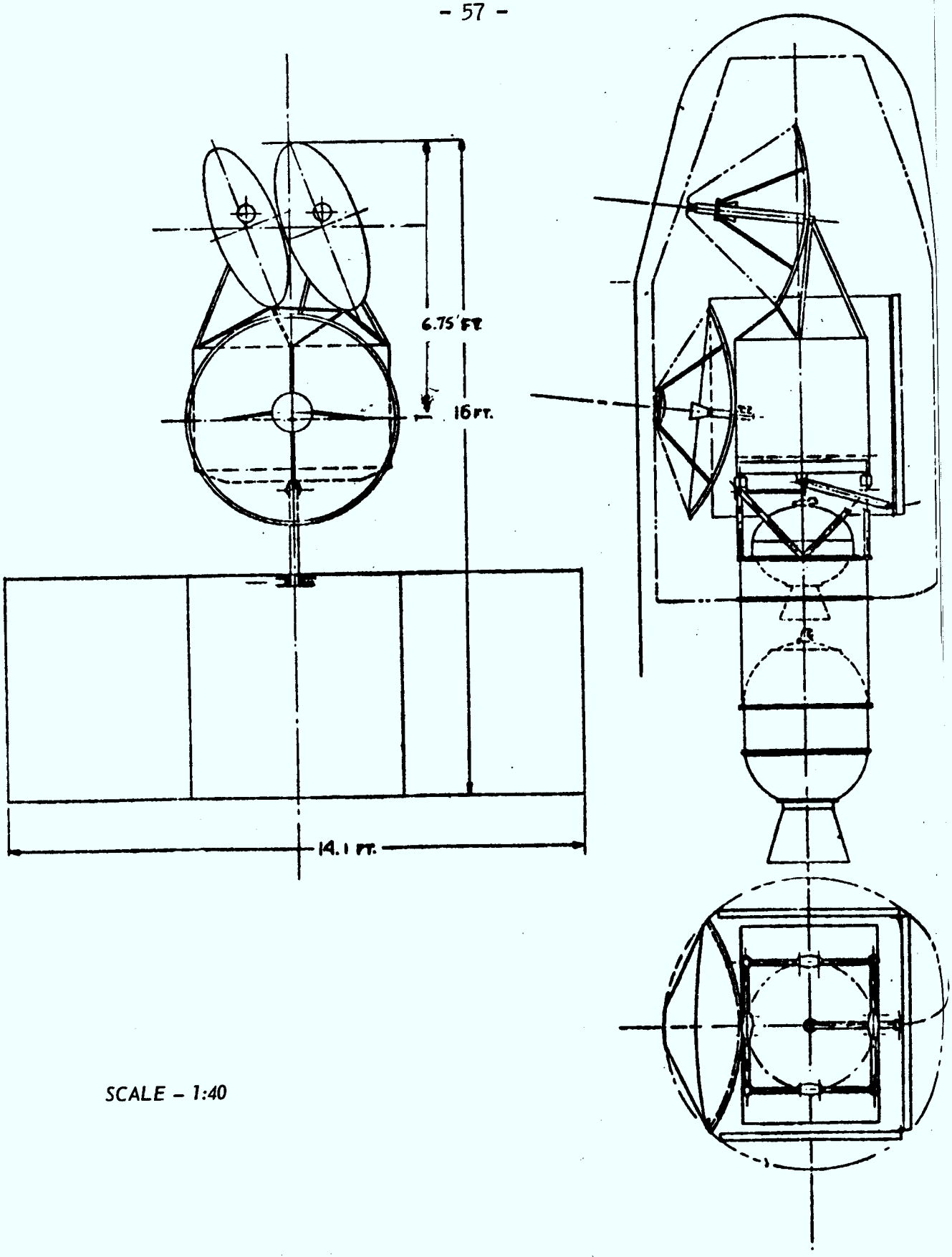

SCALE – 1:40

Figure 4.4 – Domestic Communication Satellite, Alternate 1

COMPONENT	WEIGHT (LBS)	
TRANSFER-ORBIT WEIGHT		1890
APOGEE MOTOR + ADAPTER		1040
SYNCHRONOUS - ORBIT SPACECRAFT		850
STRUCTURE (15%) & THERMAL	137	
PROPELLANT (N_2H_4 MONO-PROPELLANT, 1500 FT/SEC)	175	
TANKS AND THRUSTERS	30	
MOMENTUM WHEEL (0.25° POINTING)	23	
ATTITUDE SENSORS & ELECTRONICS	36	
SOLAR-ARRAY SHAFT & DRIVE	18	
COMMAND & CONTROL	25	
MISCELLANEOUS	34	
CONTINGENCY (5% OF TOTAL S/C WT)	42	
POWER & COMMUNICATIONS PAYLOAD (INCL ANTENNA)		330

Table 4.5 - Spacecraft Weight Summary

Table 4.6 3 Axis Concept - Rigid Deployable Solar Array

Launch	1890 lbs
Adapter	70
AKM Fuel & case	970**
Spacecraft Initial on orbit weight	850 lbs
Structure	110
Thermal	27
Electrical Dist./Misc.	28
Telemetry/Command	25
Array	73
Battery (housekeeping only)	25
Attitude	59
P&O dry	30
Fuel 8 year biased orbit	125*
Balance	6
Contingency	42
Basic Bus	550
Available Payload	300
Payload battery (85 watts)	25†
Transponder	90 lbs
Antenna	42 lbs
Margin	143 lbs

* This fuel allowance reflects the fact that the expended AKM case and part of the structure is jettisoned.

† Based on 3 axis traffic as given by Figure 3.2

This relatively high weight may be a result of inclusion of ejection mechanisms and associated structure.

array (500 watts vs 375 watts of a spinner) and the potential weight savings at these power levels. In turn, this may be contrasted with the higher powers at higher weights for a CTS type extendable array and particularly the weights of their respective array mechanisms (18 vs 70 lbs).

This concept as it could be applied to this mission is illustrated in Figure 4.5.

RCA Research Laboratories

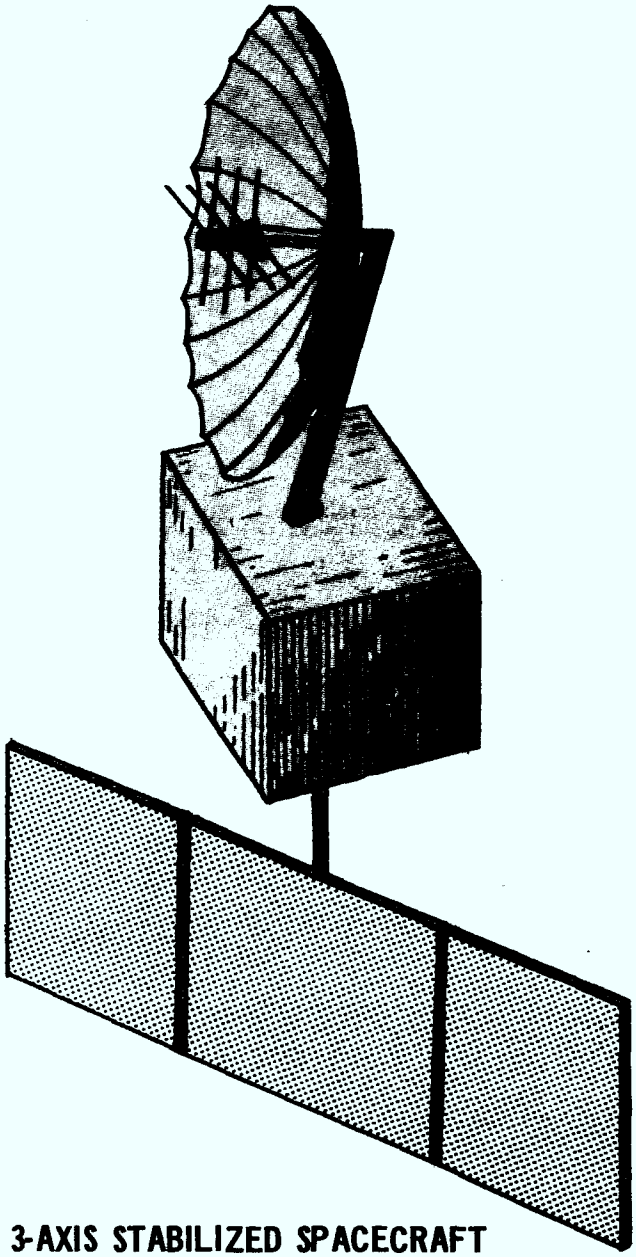

3-AXIS STABILIZED SPACECRAFT
RIGID PANEL SOLAR ARRAY

Figure 4.5

5.0 COMMUNICATIONS TRANSPONDERS

- Adaptable to Traffic Demands
- Unique Frequency Plan-Co-slot Operation Possible
- Adaptable to Spacecraft Resources

5.0 COMMUNICATIONS TRANSPONSER

5.1 Introduction

This section describes the proposed transponders for the hybrid UHF communications satellite. Two transponders are described, one operating in the vicinity of 300 MHz and the other operating in the vicinity of 2.5 GHz. The satellite will carry both transponders and in fact will be able to operate in both frequency bands at the same time.

Work carried out under a previous UHF satellite study (Contract No. OPL1-0005) has been used as background material for this study. Some of the sections from the report on the previous study have been reproduced here for completeness where it is considered that they are particularly pertinent to the present study. For instance the discussion on the hybrid combiner and the star combiner are included here without change.

A very important noise contribution in a multicarrier environment such as exists here is the level of the intermod products generated by the amplifier nonlinearities. In the previous study it was proposed to use transistor amplifiers adjusted for low intermod and high efficiency. At that time this was based on very meager experimental evidence. In the interim some additional measurements and some computer calculations have been carried out by Dr. R. Harrison of this Laboratory. An excerpt from his report on this work is included here as Appendix A. This work provides supporting evidence and additional confidence that the combination of low intermod and high efficiency can be attained.

5.2 Intermod Levels in Class C Transistor Amplifiers

A number of workers have investigated third order intermod in transistor amplifiers. Some of these have demonstrated low intermod without being too specific about how it was obtained. Others have worked at much lower frequencies than those considered here.

Hilling and Salmon (1) have shown that third order products are related to gain flatness for changes in emitter current. Operating in the 50 to 500 MHz band they obtained best performance of 25 to 30 dB intermod level at emitter currents giving maximum gain flatness.

Chang and Locke (2) show low intermod operation of a class C transistor operating at 30MHz. They obtain low intermod between the two limits of linear operation, i.e. at high power where saturation occurs and at low power with insufficient forward bias. They obtained an intermod level lower than 30dB over a 10 dB dynamic range. No special operating conditions were specified to obtain this performance at 30 MHz.

Thomas (3) has carried out both experimental and theoretical work on intermod. He shows analytically that in some cases the intermod produced by one nonlinearity in the transistor may be cancelled by that produced by another nonlinearity if these products are 180°.
out of the phase. Experimental measurements confirmed these findings.

Boag and Newby (4) have measured intermod levels in a single 2N5470 coaxial transistor class C amplifier operated at 1.8 GHz. When adjusted for maximum power output the intermod level ranged in general between -10 and -15 dB. Some measurements, however, gave intermod levels of -26 dB at high drive level and high efficiency.

The two intermodulation level measurements have been repeated using the setup of Boag and Newby. These measurements were specifically aimed at demonstrating that low intermod and high efficiency could be obtained simultaneously in Power Transistors. An additional objective was to determine the dynamic range over which low intermod was maintained. By detuning the input and output of the transistor and adding a small amount of bias the amplifier could be adjusted for intermod levels that ranged between 25 and 30 dB below the level of the two carriers. This was accomplished at a slight loss in efficiency of about 0.6 dB. Assuming this loss in efficiency would be the same for other devices and other frequencies then the specified Class C efficiency of 80% at 300 MHz would reduce to 70% and currently quoted Class C efficiencies of 35% at 2.5 GHz would reduce to 30% for low intermod operation.

Some measured results considered typical of the type of operations considered are shown in Figure 5.1. Here the intermod level, efficiency and gain are plotted as a function of the input drive level. For one final point, at 200 mw drive level, some readjustment was necessary to obtain the drive power. It is considered however that this point is one of the family indicating a total dynamic range of very nearly 6 dB where the intermod in the 2-tone test is below the required maximum of -24 dB.

Some additional measurements fully described in Appendix A have been carried out in this laboratory by Dr. R.G. Harrison on the low intermod amplifier. The low intermod adjustment was obtained with the same device as previously used and measurements made of intermod, gain and efficiency over a dynamic range of about 6 dB and using 2 equal carriers separated by 4 MHz in the vicinity of 1.8 GHz. Then without changing the adjustment, phase and amplitude nonlinearities with a single carrier were measured. These measurements of nonlinearities were used to carry out a computer calculation

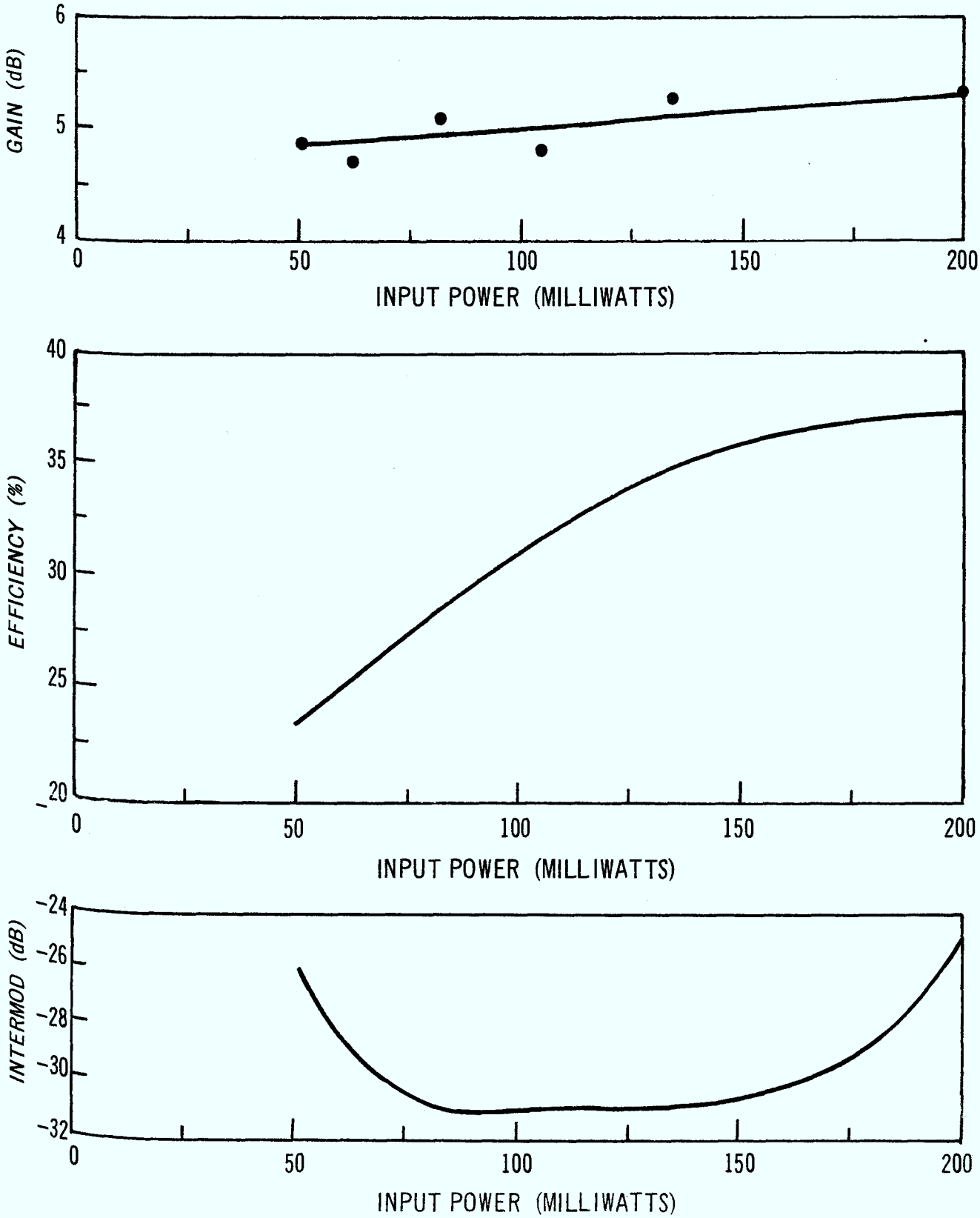

Figure 5.1 – Measured Intermod Level versus Input Power

of the expected intermod level with 12 simultaneous carriers of equal amplitude and for various input drive levels where the drive level is changed by reducing the number of carriers without changing the power level of an individual carrier. The adjustment that these calculations correspond to was inferior to that presented in figure 5.1. However, with further adjustments the results of figure 5.1 were duplicated quite closely. Thus figure 5.1 is still considered to best represent the optimum performance that can be obtained in the low intermod adjustment for this device at 1.8 GHz. These latest measurements and computer calculations provide additional evidence that satisfactory intermod operation may be obtainable in a multicarrier environment. There is a certain amount of uncertainty, with an associated risk, in extrapolating the results of measurements made at 1.8 GHz to the operating frequency of 300 MHz. At 1.8 GHz the class C efficiency of the device used was 42% which reduced to 37% under the low intermod conditions. At 300 MHz the class C efficiency is 80% and the question arises as to how the extrapolation is to be carried out. That is, does the low intermod efficiency maintain a constant ratio with the class C efficiency, does the low intermod efficiency remain constant or is some intermediate behaviour applicable.

5.3 Transistor Power Amplifier Thermal Considerations

The procedure for derating transistors and the corresponding reliability expected from the device is given in the handbook MIL HDBK-217A. The reliability is assumed to depend entirely on the transistor junction temperature and is related to it by means of a normalized junction temperature T_n by the equation

$$Tn = (T_j - T_s)/(T_{jmax} - T_s)$$

where T_j is the junction temperature

T_s is the case temperature at which power derating begins

T_{jmax} is the maximum rated junction temperature

The reliability is related to T_n by a graph in the handbook and T_j is related to the device dissipation by the equation

$$T_j = T_c + \theta_{j-c} \times P_j$$

where T_c is the anticipated maximum case temperature

P_j is the average power dissipation

θ_{j-c} is the thermal resistance from junction to case.

The manufacturers data sheet gives the maximum value of θ_{j-c} for class C operation. For biased operation the temperature across the chip becomes nonuniform and it is necessary to use a higher value of θ_{j-c} corresponding to the highest expected hot spot temperature. This necessitates operation with a lower value of junction dissipation than for class C operation. The value of θ_{j-c} can be determined from the derating curves for biased operation.

The RF power generated by the device can be related to the dissipation once the efficiency and the power gain are determined. This relation is given by the equation

$$P_j = P_o \left(\frac{1}{\eta} + \frac{1}{G} - 1\right)$$

where P_o is the RF output power

η is the efficiency (P_o/P_{dc})

G is the gain (P_o/P_{in})

Calculations have been carried out for representative transistors for which sufficient data has been available and extrapolated to the mid 1972 period. This has been done for 300 MHz and for both class C and class A operation. The results are given in Table 5.1 for different junction temperatures and for an assumed case temperature of 55°C. Two efficiencies are shown for each configuration, i.e. 25 and 30% for class A operation and 60 and 70% for class C.

Table 5.1 – Maximum power generated per device (watts) to maintain junction temperature (T_J) below value specified

T_n	0.1	0.2	0.3	0.4	0.5
T_J °C	110	120	130	140	150
Failure Rate x 10^6 mil HDBK 217A	0.28	0.39	0.51	0.65	0.82

		Eff. %	$\frac{1}{\eta} + \frac{1}{G} - 1$					
Class C 2.5 GHz $T_C = 55°C$ G = 7 dB	$P_J = (T_J - T_C)/\theta_{J-C}$ →			11	13	15	17	19
	Early 1973 $\theta_{J-C} = 5°C/Watt$	40	1.7	6.5	7.7	8.8	10.0	11.2
		45	1.42	7.7	9.2	10.6	12.0	13.4
Class C 300 MHz $T_C = 55°C$ G = 7 dB	P_J →			15.7	18.6	21.4	24.3	27.1
	2N6105 3.5°C/W	60	0.87	18.0	21.4	24.6	28.0	31.2
		70	0.63	25.0	29.5	34.0	28.6	43.0
Class C 300 MHz $T_C = 55°C$ G = 7 dB	P_J →			36.7	43.3	50.0	56.6	63.3
	Mid '73 1.5°C/W	60	0.87	42.1	49.7	57.5	65.1	72.8
		70	0.63	58.2	68.7	79.5	90.0	100.0

5.4 Power Combiners

5.4.1 General

To handle variations in power output required (to accommodate less than 100% eclipse operation for example) it is desirable to have a means of reducing the power level of the amplifier so that the battery drain can be reduced. This can be done in a number of ways

a) By supplying amplifiers with different power levels the drain on the spacecraft resources can be varied by selecting the appropriate amplifier. This approach is taken in the case of the 300 MHz output amplifiers for both services. For the mobile service one amplifier sized for one high power channel with a redundant unit plus two other amplifiers one for two channels and one for three channels are provided but only one of these four amplifiers may be used at a time. The same approach is taken for the low power transportable service at 300 MHz.

b) The drain on the spacecraft resources can also be altered by adding amplifiers operating in different bands. They are combined by appropriate multiplexing action. This approach is taken in combining the different services. That is the mobile and transportable service at 300 MHz operating in somewhat different frequency bands are combined in the multiplexer by means of frequency selective filters. The same approach is taken at 2.5GHz in combining the radio broadcast and the fixed station service.

c) A third method of combining two amplifiers can be utilized if the two amplifiers carry the same signals. This requires switchable phase shifters but does not require additional amplifier hardware.

d) A fourth method of combining has been investigated, that of space combining in front of the parabolic reflector. This method is not used

but was considered for combining the higher power mobile service and the low power transportable service at 300 MHz. It has certain disadvantages compared to the use of a multiplexer but could be used if the multiplexer proved difficult to implement.

e) In addition to the problem of combining the output from different amplifiers it will be necessary to combine the output of a number of devices to give the power level of the various amplifiers. For this purpose two combining networks have been considered, a straight hybrid combiner and a star combining configuration (Refs. 6,7). The hybrid combining network is straightforward since it uses nothing but standard hybrid junctions. It has the disadvantage that the loss of one amplifier of a pair causes a drop in output of 6 dB rather than the expected 3 dB. The star is not a developed system but promises to have some advantages in performance and reliability over a hybrid combiner.

The number of devices that need to be combined to form a single amplifier is at most two. The optimum method of combining them is being left open but either straight hybrid combining or dual hybrids with switched phase shifter as described in section 5.4.3 below may be used.

The switched amplifier approach requires no further explanation but the other approaches are discussed in more detail below.

5.4.2 Frequency Multiplexing

(i) 2.5 GHz

At 2.5 GHz a waveguide filter form of multiplexer can be adopted. By using oversize and overheight waveguide and careful construction an unloaded Q_o of 20,000 is estimated. Using this Q_o and standard filter charts the parameters listed in Table 5.2 were obtained.

Table 5.2 Typical output multiplexer filter characteristics at 2.5 GHz.

insertion loss	1 dB
pass band	3 MHz
separation between filter centre frequencies	7 MHz minimum
separation between operating bands	4 MHz minimum
return loss	24 dB
number of sections	5

This filter operates satisfactorily except for one disadvantage (a disadvantage common to all the combining methods discussed). That is the pass band is much wider than the frequency band actually used. Thus any other country wishing to use the remaining frequencies in the filter pass band will be subjected to intermod products etc. from this satellite unless an exclusive allocation is obtained for the bandwidth of the multiplexer filter or unless isolation is provided by ground station antenna directively.

The outside dimensions of the waveguide would be approximately 3.5 x 4.5 inches and the length of each filter would be about 18". Two filters are required attached to a manifold plus an output and an input filter each about 14" long. The total weight of all waveguide parts fabricated from carbon fibre composite is about 7 lbs for the two multiplexers plus about 3 lbs for the input and output filters.

(ii) 300 MHz

At 300 MHz a waveguide approach is impossible as the size of the filters would exceed the size of the spacecraft. Instead a stripline or lumped constant approach must be assumed. An unloaded Qo of 2000 is taken as

reasonable for this type of construction. Using the same number of sections as for the 2.5GHz filter the properties listed in Table 5.3 were obtained.

TABLE 5.3 **Typical output multiplexer filter characteristics at 300 MHz.**

insertion loss	1 dB
pass band	4 MHz
separation between filter centre frequencies	8.8 MHz minimum
separation between operating bands	5 MHz minimum
return loss	24 dB
number of sections	5

Like the 2.5GHz multiplexer the 300 MHz unit provides no reduction of spurious to other users within the passband of the filter. At 300 MHz also no isolation is provided by ground station directively as many users are assumed to have 0dB gain antennas with no directivity.

The size of the 300MHz 2-channel multiplexer with the output and input filters is estimated at about 10" x 10" x 4" thick. The weight of the whole package should be about 4 lbs.

5.4.3 Dual Hybrids with Switched Phase Shifters

This approach can be used to advantage if it is desired to accommodate peak loads by turning on the redundant unit. By switching phase shifters in the combining unit, the total power in the two amplifiers, or the total power in either one taken individually can be transmitted to a single output port. A schematic of the combining system is shown in Figure 5.2 along with the value of the three conditions of operation.

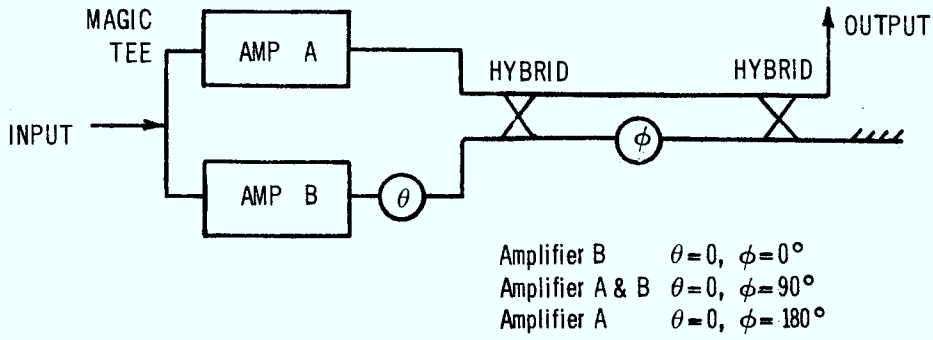

Figure 5.2 – Combining two amplifiers carrying the same signal using two 90° hybrids and a switchable phase shifter.

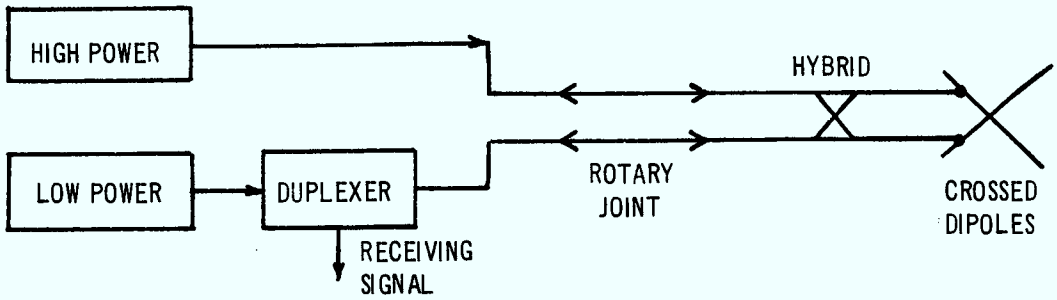

Figure 5.3 – Space combining of two different signals in the near field of the antenna.

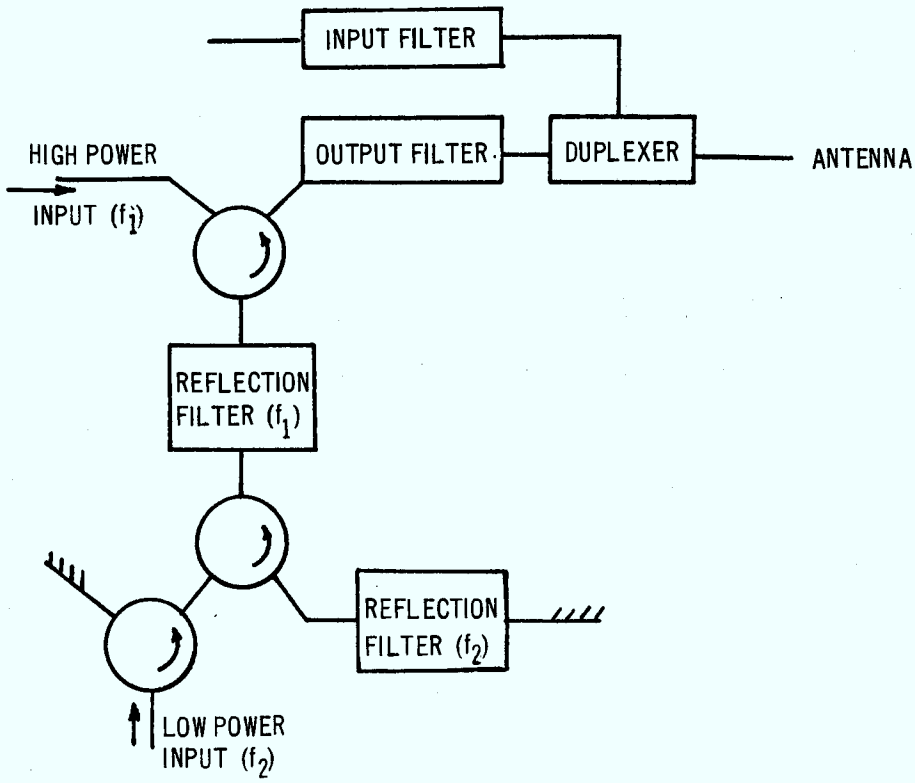

Figure 5.4 – A method of combining two signals at different frequencies using rejection filters and circulators.

An advantage of this approach is that double capability can be obtained for short periods of time without a significant increase in hardware weight. A disadvantage is that the phase shifts in the two amplifiers must be equal and stable. Details of this combining network are given in Appendix B.

5.4.4 Space Combiners at 300 MHz

A block diagram of this approach is shown in Figure 5.3. The two amplifiers carry different signals at different frequencies. The one carries the high power channels for the mobile service while the second carries the transportable service. These two amplifiers are combined by a 90 deg. hybrid. The two output ports of the hybrid thus carry half of each service with a 90° phase shift between the signals in the two ports. The signals in the two lines are used to drive crossed dipoles at the focal point of a parabolic reflector. The resulting signal is circularly polarized, however the high power channels have the opposite sense to the low power channels. The received signal can be given the same polarization as the low power transmit signal and can be recovered by a single duplexer in the low power line. This system has the disadvantage that two channels are required in the rotary joint instead of one. For a system using an electronically despon antenna two phasing and switching networks are required. There is no reduction of out of band spurious in this system.

This method of combining is not being considered further because it transmits on both polarizations. This places unacceptable restrictions on the design of the ground terminals or on the operational flexibility of the system.

5.4.5 Multiplexing using Rejection Filters

It is possible to use rejection filters to multiplex two frequency bands together. A block diagram giving a possible arrangement is shown in Figure 5.4. The circuit uses a combination of two rejection filters and three circulators to accomplish the multiplexing. Two terminations are added

to take the out of band spurious responses. Circulators for this application would weigh about 1.0 lbs each. Rejection filters for this application have not been evaluated but it is expected that they will have pass bands and frequency separations similar to the conventional multiplexer design. In that case, this configuration has no advantage over the conventional multiplexer and has some additional weight.

5.4.6 Hybrid Combiners

A typical hybrid combiner is shown in Figure 5.5. This is the network that was proposed for the CTS UHF transponder. It uses eight transistors which are first combined in hybrids to make 4 lines. These are passed through isolators and then fed to a four way combiner which has a single output. When a single transistor fails in such an amplifier the output is reduced by an amount which depends upon the number of transistors being combined. This amount is shown in Figure 5.6, as a function of the number of transistors. It is 1.2 dB for an eight transistor amplifier. This is more loss than can be tolerated so redundant units must be switched in as soon as the first transistor fails. This can be done by substituting the complete amplifier or by substituting individual transistors as they fail. This in general takes twice as many transistors as are actually operating at any one time. The static loss also increases as the number of operating transistors increases due to the increased number of hybrids required. The static loss is also plotted in Figure 5.6 assuming that .25 dB loss is added due to hybrids and isolators every time the number of transistors is doubled.

5.4.7 Star Combiners

The star combining network is shown schematically in Figure 5.7. The transistors are arranged in a circle and connected by quarter wave lines to to the output transmission line at the center. The number of transistors around the circle consists of the number of operating transistor plus the

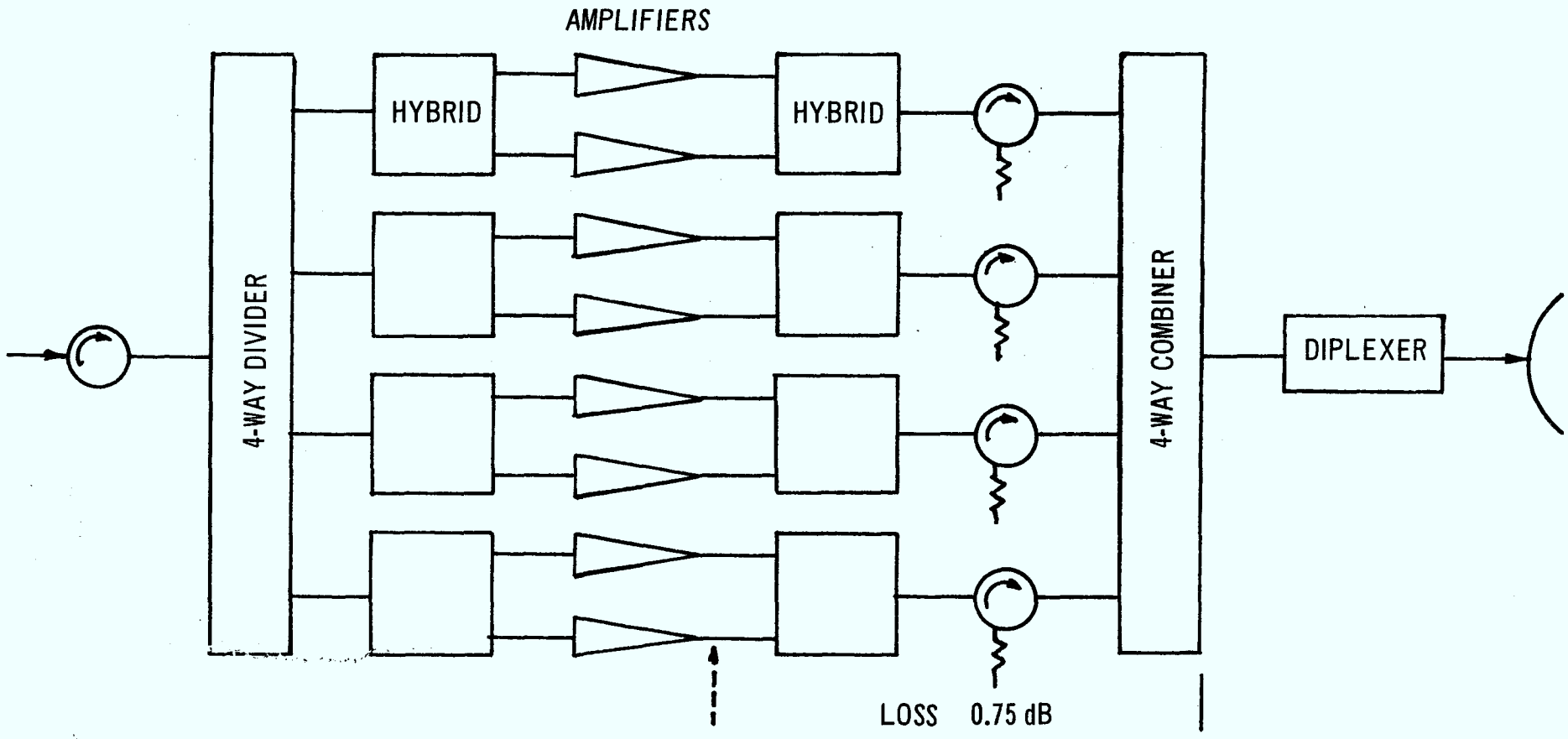

Figure 5.5 – An Eight-Way Power Combiner Using Hybrids

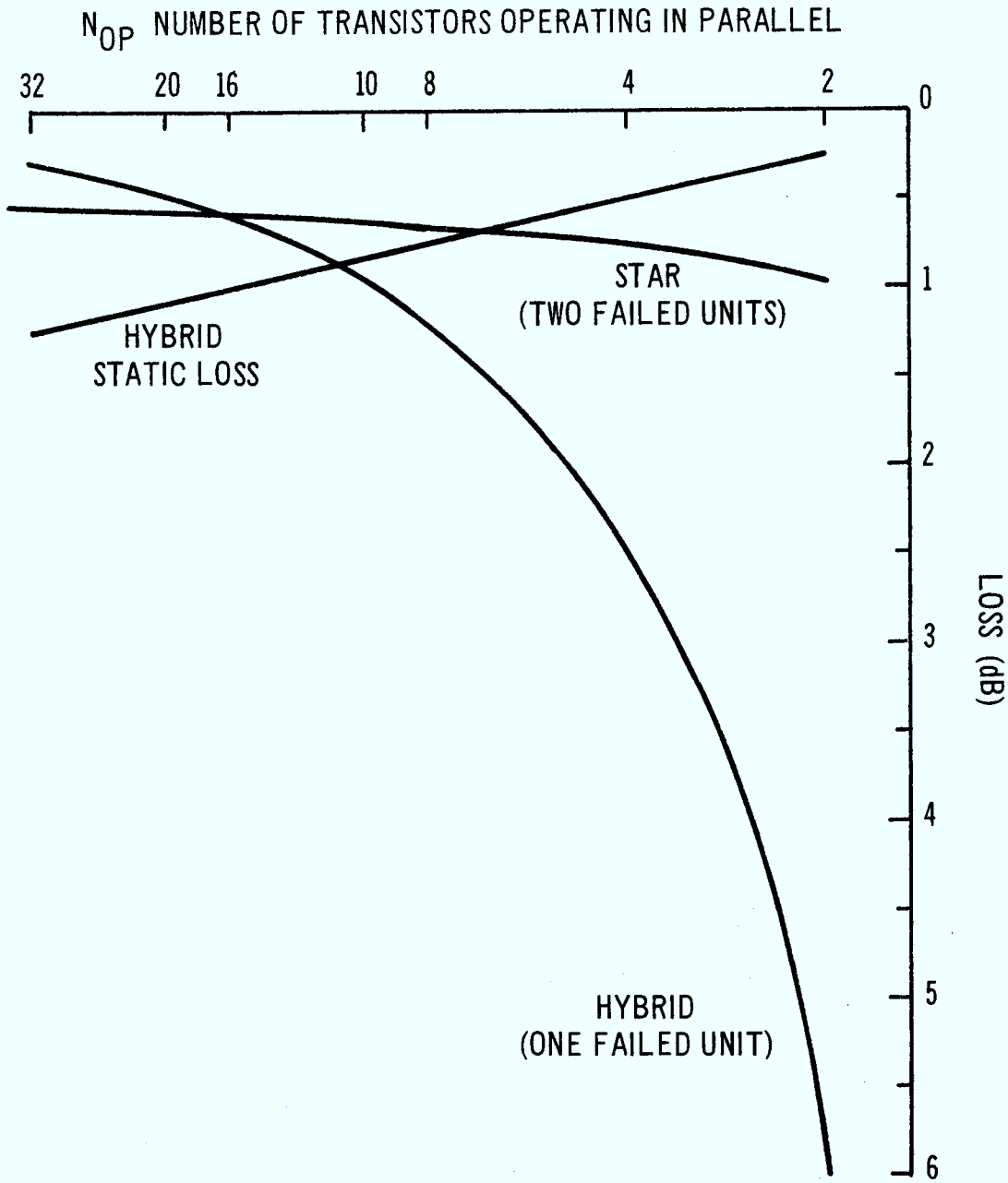

Figure 5.6 – Losses Associated with Star and Hybrid Combiners

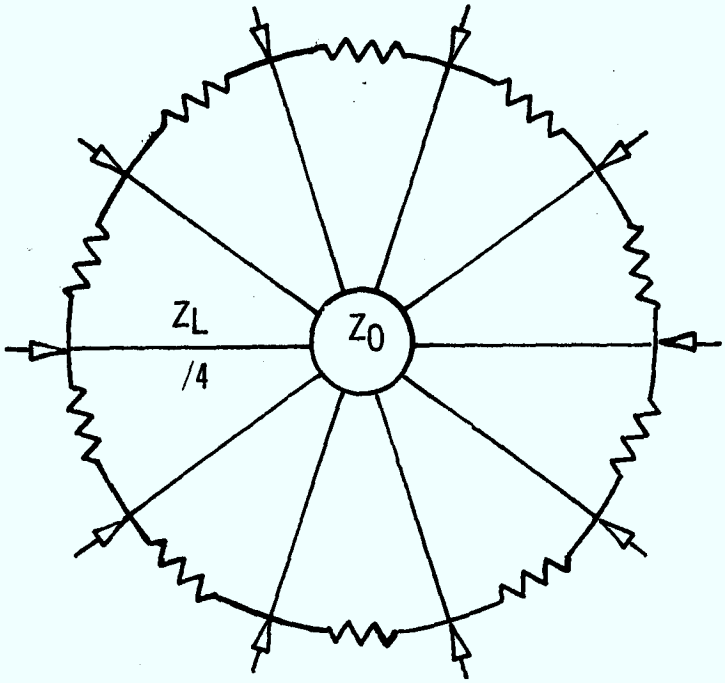

Figure 5.7 – A Star Combining Network with 10 Terminals

the necessary spares. The spare transistors are turned off until such time as one of the operating transistors fails. Then the failed component is turned off and one of the spare transistors is turned on. This returns the amplifier to full power except for the mismatch which may be introduced by the failed unit.

If the total number of transistors is N then the quarter wave lines have impedances such that the low output impedance of the transistor is transformed to NZ_o where Z_o is the impedance of the output line from the center. When the N lines are combined in parallel then the combined impedance is just Z_o. The resistances joining the transistor outputs are selected to minimize the mismatch caused by the spare transistors and the transistors that have failed. When all transistors are operating in phase the resistors carry no current and dissipate no power. When a transistor fails by shorting the transformed impedance is infinite and a mismatch occurs at the output line. In addition, the transistors adjacent to the failed unit dissipate power in the resistors. When a transistor fails open it will present a high impedance. The resistors then form the source impedance. Thus decreasing the resistance reduces the mismatch for the spare transistors or transistors failed open and increases the mismatch for units that fail shorted. It is necessary to select resistance values and/or impedances between the transistors which minimize the losses under all conditions. This is a very complex problem and depends upon the number of transistors in the ring and the number of these which are spare. This problem has not been solved but indication of trends can be obtained if it is assumed that the resistors R_L are pure real, and that the output impedance for an open or a spare transistor is controlled by the resistors and is equal to $R_L/2$. Then when a transistor fails open there is no change in output power and when a transistor fails short there is a mismatch at the

output line and also in adjacent transistors. The overall loss can be further minimized by matching initially with some of the spare transistors replaced by shorts. This calculation has been carried out for the case of two spare transistors and a variable number of operating units N_{op}. The optimum resistance under these assumptions is given by

$$R_L = Z_{op}/(\frac{1}{4} + \frac{1}{2}\sqrt{\frac{1}{4} + 2/N_{op}})$$

where Z_{op} is the output impedance of an operating transistor.

The minimum loss which correspondes to this resistance is given in Figure 5.6 as a function of N_{op}. In addition to this loss caused by sparing, a static loss would also occur with the star but it would be nearly independent of the number of transistors involved.

An examination of Figure 5.6 shows that as a general rule a hybrid combiner is better if the number of transistors is low and the star is better if the number is high. The cross over point appears to be for eight operating transistors.

The star configuration incorporates an ideal sparing arrangement in that each spare may be substituted for any failed unit and every spare may be used before the amplifier must be considered failed. This is evident in Table 5.4 where the 7 and 8 year reliability figures are quoted for the devices in a number of star configurations and for an eight device and four device hybrid combiner amplifier. These figures have been calculated for a failure rate of .44 per 10^6 hours. It is seen that reliabilities obtained with a star configuration using one spare are equal to a hybrid configuration with a complete redundant amplifier. In addition the star may have another advantage, that of changing the operating level either up or down by switching in some of the spare units or switching out some of the operating units. In the case of the hybrid combiner there are no spare units to be turned on and the penalty incurred by turning units off is expected to be greater than for the star.

TABLE 5.4 - Reliability Estimates for Devices in Various Power Output Amplifiers at a Junction Temperature of 110°C.

Configuration	Number of Devices		Reliability	
	Active	Passive	7 years	8 Years
Star	5	1	.990	.987
Star	6	1	.986	.982
Star	6	2	.999	.998
Star	7	1	.982	.977
Star	7	2	.998	.997
Star	8	1	.977	.971
Star	8	2	.998	.997
Hybrid	8	8	.962	.952
Hybrid	4	4	.989	.986

5.5 Duplexing Arrangements

The duplexer and associated components have the task of connecting the transmitter and receiver to the same antenna while protecting the receiver from leak through of the transmitted signal or of other spurious signals from the transmitter. It also contributes to the reduction of spurious signals, outside the assigned frequency band, that would otherwise be radiated from the antenna.

The block diagrams of the satellite transponders at 300 MHz and 2.5 GHz are shown in Figures 5.12 and 5.13 (pp 96 & 100). These diagrams show the arrangement assumed for input and output filtering and duplexing. The budget for isolation provided by different elements of the filtering system are given in Table 5.5. The thermal noise from the output amplifier is estimated first. The noise power being considered in both the 300 MHz and 2.5 GHz transponders is that of the final output broadband amplifier in the receiver band. Out of band noise is removed by the input multiplexer in the 2.5GHz transponder and by filters incorporated in the up converter in the 300 MHz transponder. A noise figure of 15 dB is assumed for the output amplifier which is raised by the 50 dB gain amplifier to -139 dBW/Hz or -97dBW/channel. A second source of noise is spurious signals in the output amplifier. The spurious are at a higher level than the thermal noise and determine the filtering required. A total filtering of 180 dB and 165 dB are assumed for the two transponders divided as shown between the multiplexer, the duplexer and the output filter. In addition, the output filter is required to provide at least 50 dB of attenuation at the second harmonic frequency.

The requirement on the input filter is to provide attenuation of the output signal so that it does not interfere with the operation of the input amplifier and does not interact with the input signal. The criteria for de-

TABLE 5.5 Budgets for isolation between the input and output lines for the two transponders.

	300 MHz	2.5 GHz
Transmitter input noise power density (NF = 15 db)	-189dBW/Hz	-189dBW/Hz
Gain of transmitter	50 dB	50 dB
Output noise in receiver band dBW/Hz	-139	-139
dBW/Channel	- 97	- 97
Output spurious (60 dB down)	- 35 dBW	- 48 dBW
Attenuation in Receive Band		
Mux filter (dB)	90	90
Duplexer filter (dB)	35	35
Output filter (dB)	55	40
Output Filter atten. at second harmonic (dB)	>50	>50
Required output noise level in Receive band at input to Receiver dBW/Hz	-214	-214
dBW/Channel	-170	-170
Output Power (dBW)	25	12
Attenuation in transmit band		
duplexer filter (dB)	35	35
input filter (dB)	90	75
Transmitter leakage (dB)	-100	- 98
Gain in first AMP (dB)	25	25
Input to first mixer (dBW)	- 75	- 73
Below L.O. (dB)	45	43
Below intercept PT (dB)	45	43
Above signal Level (dB)	< 30	< 20

termining the level is that it must be much lower than the local oscillator power level of the first mixer and also much lower than the intercept point of the first amplifier. These have both been assumed at 0dBm. This criteria does not ensure that the output is reduced below the level of the input signal and a thorough analysis would be required to determine that there are no interactions between the residual output signal and the input signal occuring within the bandwidth of the IF amplifiers. The isolation of the input filter at the transmit frequency is thus established as 90 dB at 300 MHz and 75 dB at 2.5GHz. Using this budget as a basis a summary spec has been developed for the input and output filters. These are shown in Table 5.6 with the multiplexer filter included.

The filter pass band and cut-off characteristics are shown in Figures 5.8 and 5.9 for 300 MHz and 2.5GHz respectively. At 300 MHz the input and output filters are shown as specified with a pass band of 20 MHz. This assumes that the two bands are not more than 20 MHz apart. If the two bands are separated by more than 20 MHz or are located in a different part of the spectrum then the input and output filter designs would of necessity be altered. With a large separation between bands it may be necessary to add an input multiplexer or make other alterations in the transponder design.

At 2.5 GHz the input and output filter pass band at 35 MHz covers the full band assigned for satellite service. Any specific assignments within that band can be accommodated without modifying the filter design.

A critical item of the satellite design is the loss in the output transmission line. One of the main components of this loss is contributed by the output multiplexer. This component is inversely related to the passband of the output multiplexer filters as illustrated in figure 5.10. The bandwidths of the multiplexer filters listed in table 5.6 can be altered with a corresponding change in insertion loss as given by figure 5.10.

TABLE 5.6 Summary specifications for the input and output filters and the multiplexer filter for both transponders.

MUX FILTER	300 MHz	2.5 GHz
Qo	2000	20,000
return loss	24 dB	24 dB
operating freq.	320	2500
$f/\Delta f$	80	800
Minimum Δf	4.0 MHz	3.1 MHz
insertion loss	1 dB	1 dB
minimum separation between filter center freqs.	8.6	7.0
No. of sections	5	5
isolation at cross-over PT	35 dB	35 dB
Output Filter		
Qo	2000	20,000
Δf	20 MHz	35 MHz
$f/\Delta f$	15.5	72
return loss	24 dB	24 dB
isolation at rec. freq.	55 dB	40 dB
No. of sections	4	4
insertion loss	0.15 dB	0.08 dB
Isolation at second harmonic	>50 dB	>50 dB
Input Filter		
Center frequency	390 MHz	2675 MHz
Qo	2000	20,000
Δf	20.0 MHz	35.0 MHz
$f/\Delta f$	19.5	77
return loss	24 dB	24 dB
Isolation at trans.freq.	90 dB	75 dB
No. of sections	5	5
Insertion loss	0.2 dB	0.1 dB

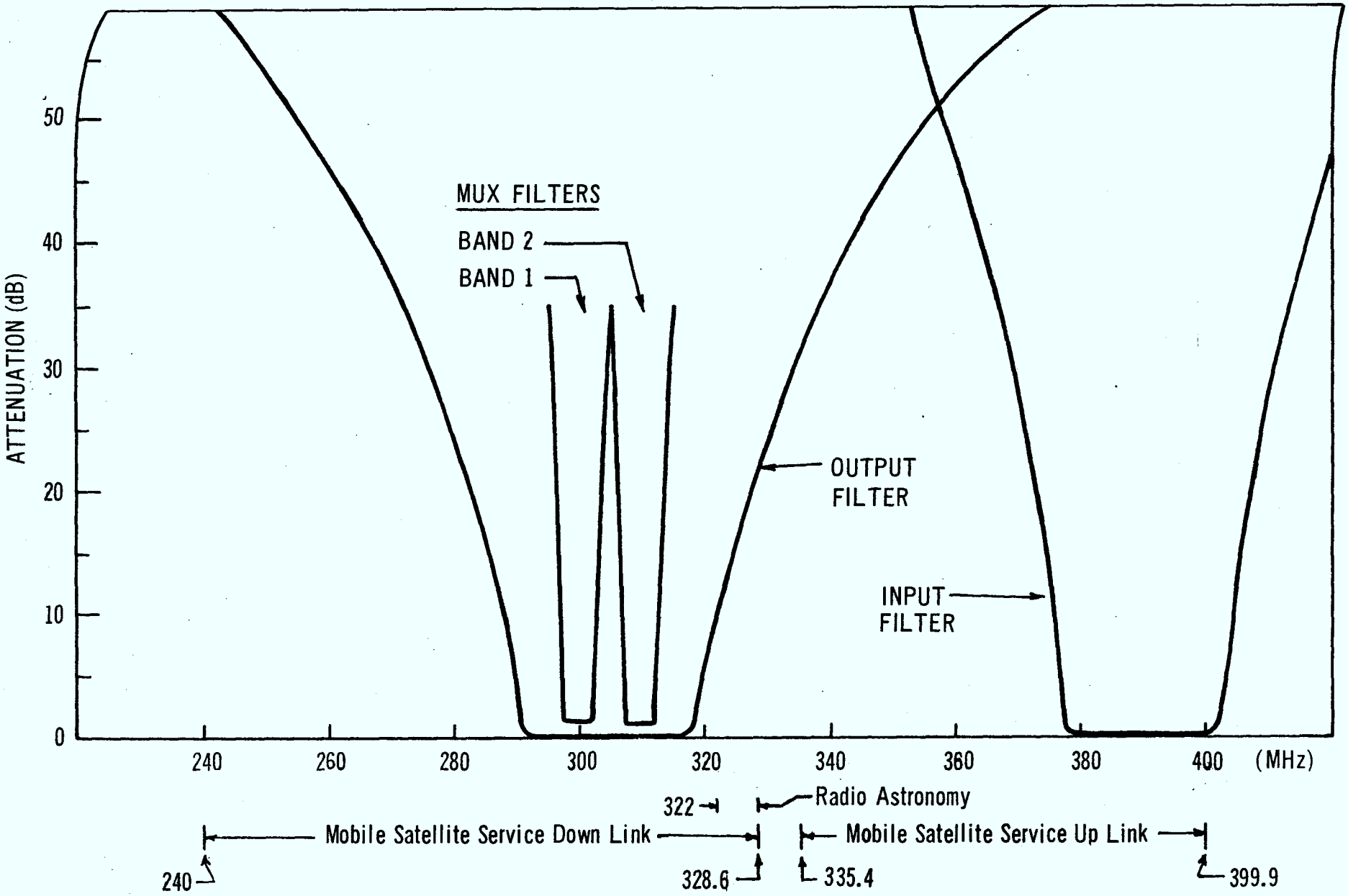

Figure 5.8 – Representative bandpass propertiers of the multiplexer filters and the input and output filters at 300 MHz.

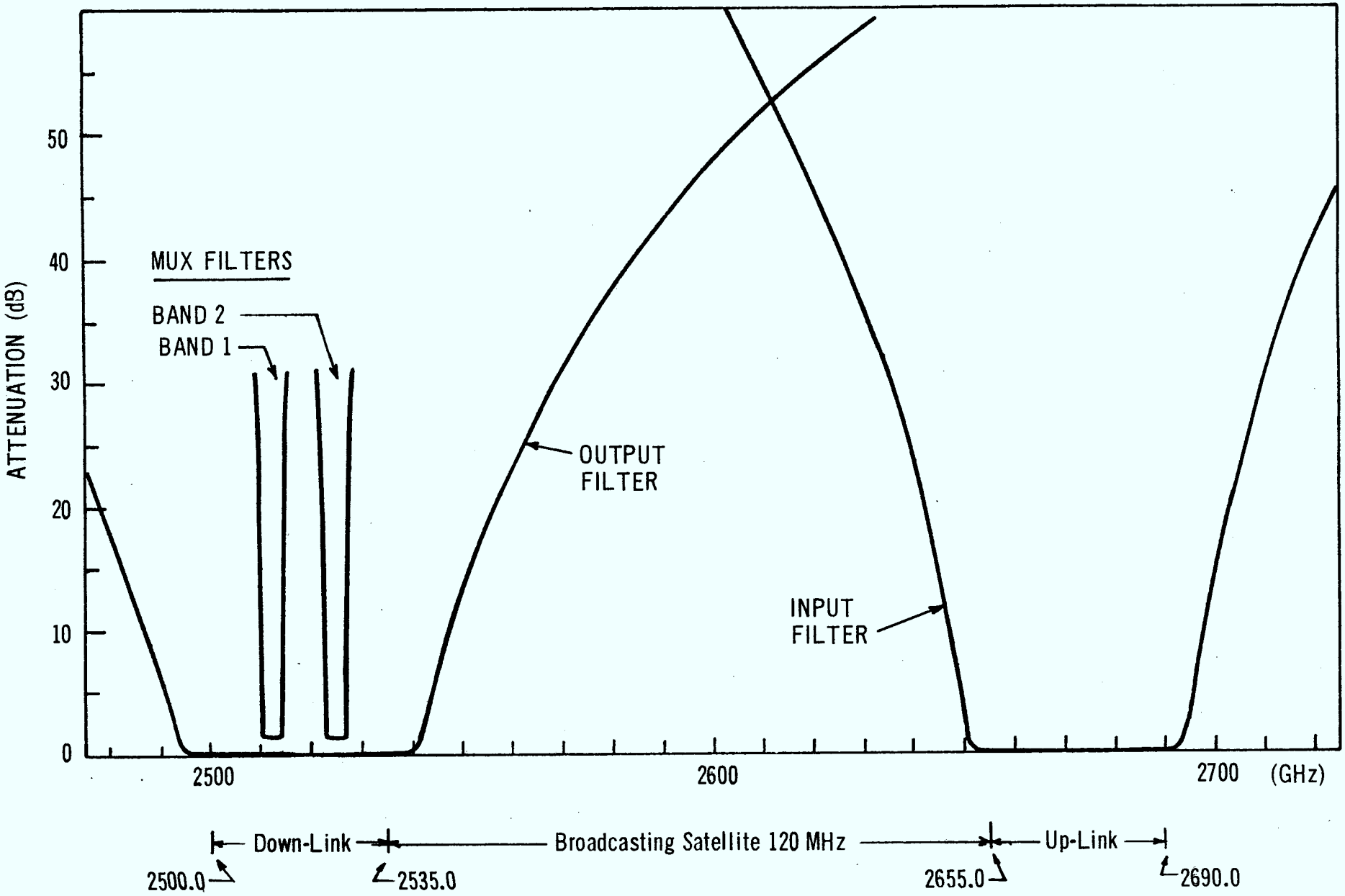

Figure 5.9 – Representative bandpass characteristics of the multiplexer filters and the input and output filters at 2.5 GHz

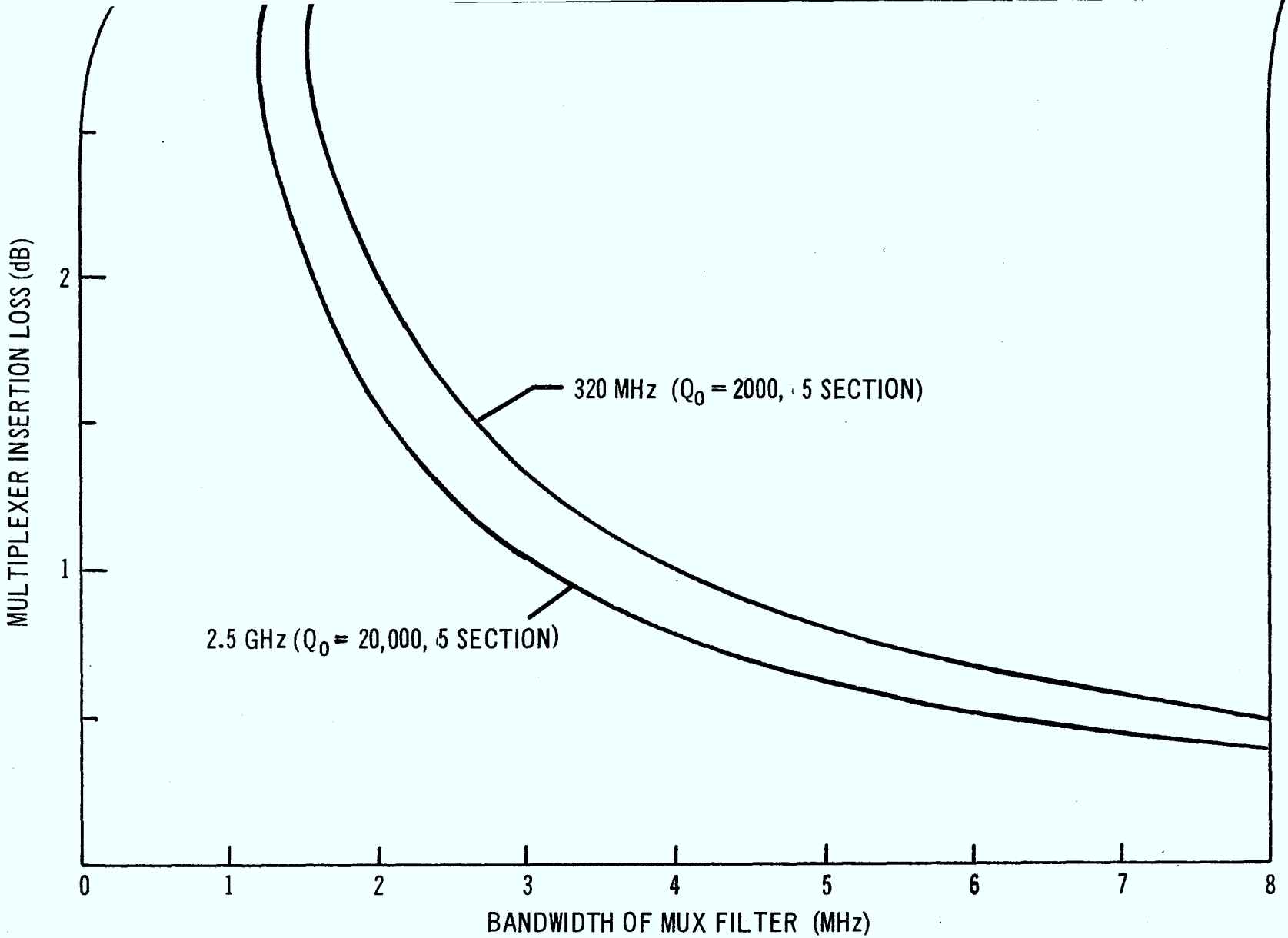

Figure 5.10 – Dependence of multiplexer insertion loss on the passband bandwidth of the multiplexer filters.

5.6 Output Power Stages

The transponder block diagrams of Figures 5.12 and 5.13 (pp 96 & 100) output amplifiers operating at different power levels. These will be transistor amplifiers at 300 MHz, a 20 watt TWT for the voice service at 2.5GHz. Two of the amplifiers at 300 MHz will carry only one high power carrier and are therefore adjusted for high efficiency class C operation. The remaining transistor amplifiers have two or more carriers and therefore must be adjusted for low intermod. These amplifiers are therefore adjusted as described in section 5.2 and Appendix A.

Table 5.7 gives the output loss budget for the two transponders and depending upon the number of devices required to give the specified output power level. This number is either one or two so that at most only two devices must be combined. These devices will be combined with a dual hybrid switched phase shifter configuration.

Table 5.8 gives the main characteristics of each of the output amplifiers including the drive stages. The specified EIRP per channel at 300 MHz is 28 dBW for high power channels and 18dBW for low power channels. This is the equivalent single carrier class C EIRP and is 1.05 dB higher than the multi-carrier EIRP actually required. For the 300 MHz amplifiers this 1.05 dB is subtracted out again to give the actual EIRP/channel of 27 and 17 dBW. For the multicarrier amplifiers adjusted for low intermod, the reduction in efficiency below the single carrier class C efficiency is 0.6 dB. To this has been added an implementation margin of 1.0 dB making a total back-off of 1.6 dB. The 1.0 dB margin is considered necessary because the low intermod condition has been measured on only one transistor operating at 1.8 GHz where the class C efficiency is only 42%. Extrapolation to 300 MHz where the class C efficiency is 80% or to 2.5GHz where it is only 35% may not be valid.

	Frequency			
	300 MHz		2.5 GHz	
Output Device	Transistor	Transistor	Transistor	TWT
Number of Devices	1	2	2	1
Output Filter	0.15	0.15	0.08	0.08
MUX Filter	1.0	1.0	1.0	1.0
Switches	0.3	0.3	0.2	0.2
Combining Losses	0.1	0.35	0.35	0.1
TOTAL	1.55	1.80	1.63	1.38

Table 5.7 – Budget of Transponder Output Losses

TABLE 5.8 Calculation of DC power requirements for various amplifier sizes for the two transponders

Frequency (MHz)	300	300	300	300	300	2500	2500
Type of Service	mobile	mobile	mobile	Transp	Transp	Program	Fixed
No. of Carriers	1	2	10	20	30	3	92
Spec. EIRP/Carr. (dBW)	28	28	18	18	18	25	15.4
Actual EIRP/Carr. (dBW)	27	27	17	17	17	25	15.4
Total EIRP (dBW)	27	30	27	30	31.8	29.8	35.05
Antenna gain (dB)	15.7	15.7	15.7	15.7	15.7	25.9	25.9
Output Power (dBW)	11.3	14.3	11.3	14.3	16.1	3.9	9.15
RF losses (dB)	1.55	1.8	1.55	1.8	1.8	1.63	1.38
Generated (dBW)	12.85	16.1	12.85	16.1	17.9	5.53	10.5
Power (watts)	19.3	40.7	19.3	40.7	61.5	3.58	11.2
Output stage	Class C	Low Im Trans.	Low Im Trans.	Low Im Trans.	Low Im Trans.	Low Im Trans.	20 Watt TWT
No. of devices	1	2	1	2	2	2	1
Saturation eff. (%)	80	80	80	80	80	35	31
Back-off (dB)	0	1.6	1.6	1.6	1.6	1.6	2.5
EPC eff. (%)	95	95	95	95	95	95	90
DC Power (watts)	25.4	77.5	36.7	77.5	117.0	15.5	72
Gain (dB)	7	7	7	7	7	7	50
Input power (watts)	3.9	8.1	3.86	8.1	12.3	.71	-95 dBm
2nd Drive Stage	Class C Trans	Low Im Trans	Low Im Trans	Low Im Trans	Low Im Trans	Low Im Trans	
Overall eff (dB)	1.2	2.8	2.8	2.8	2.8	2.8	
DC Power (watts)	5.1	15.5	7.3	15.5	23.4	3.1	
Gain (dB)	7	7	7	7	7	7	
Input power (watts)	.78	1.6	.77	1.6	2.46	.14	
1st drive stage	Class C Trans	Low Im Trans	Low Im Trans	Low Im Trans	Low Im Trans		
Overall eff. (dB)	1.2	2.8	2.8	2.8	2.8		
DC Power (watts)	1.02	3.1	1.45	3.1	4.7		
Gain (dB)	7	7	7	7	7		
Input Power (watts)	.155	.32	.154	.32	.49		
Previous Stage	Class A Trans	Class A Trans	Class A Trans	Class A Trans	Class A Trans	Class A Trans	
Overall eff. (dB)	8	8	8	8	8	8	
DC Power (watts)	2.0	4.0	1.9	4.0	6.1	1.8	
Gain (dB)	~ 30	~ 30	~ 30	~ 30	~ 30	~ 37	
Total DC Power (watts)	33.5	100.1	47.4	100.1	151.2	20.4	72
Total DC/RF Loss (dB)	3.9	5.7	5.45	5.7	5.7	9.2	9.4

The amplifiers shown in Table 5.8 are nominally sized for a specified number of carriers of a specified power level. However, except for the class C amplifier, these amplifiers can handle different numbers of carriers at different power levels. As an example, the amplifier sized for 30 low power carriers can equally well carry three high power carriers and the amplifier sized for 2 high power carriers is in fact identical to that for 20 low power carriers. This can be generalized to other power levels with the appropriate numbers of carriers. In particular the highest power amplifier can be used with a single carrier given an output EIRP of 32.8 dBW by increasing the gain in the IF stages of the transponder. Figure 5.11 gives the maximum number of carriers that can be used with the three sizes of amplifiers as a function of the output EIRP (equivalent Class C).

Each amplifier may be used with less than the maximum number of carriers and, provided the actual number does not fall below approximately 1/3 to $\frac{1}{2}$ of the maximum number, the intermod level will be within acceptable limits.

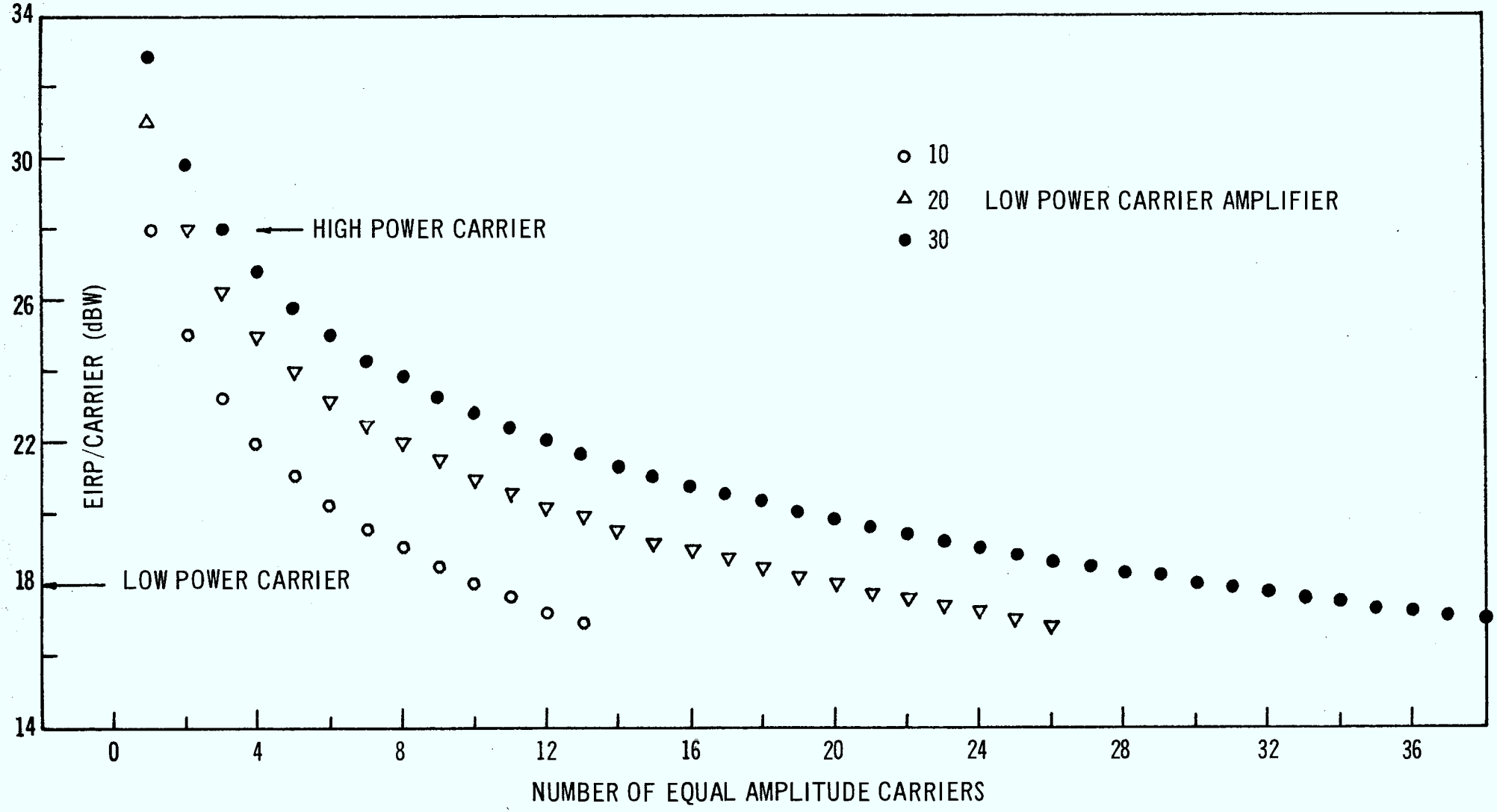

Figure 5.11 – The maximum number of carriers that can be amplified with acceptable intermod levels as a function of EIRP/carrier for each of the three sizes of 300 MHz output amplifiers.

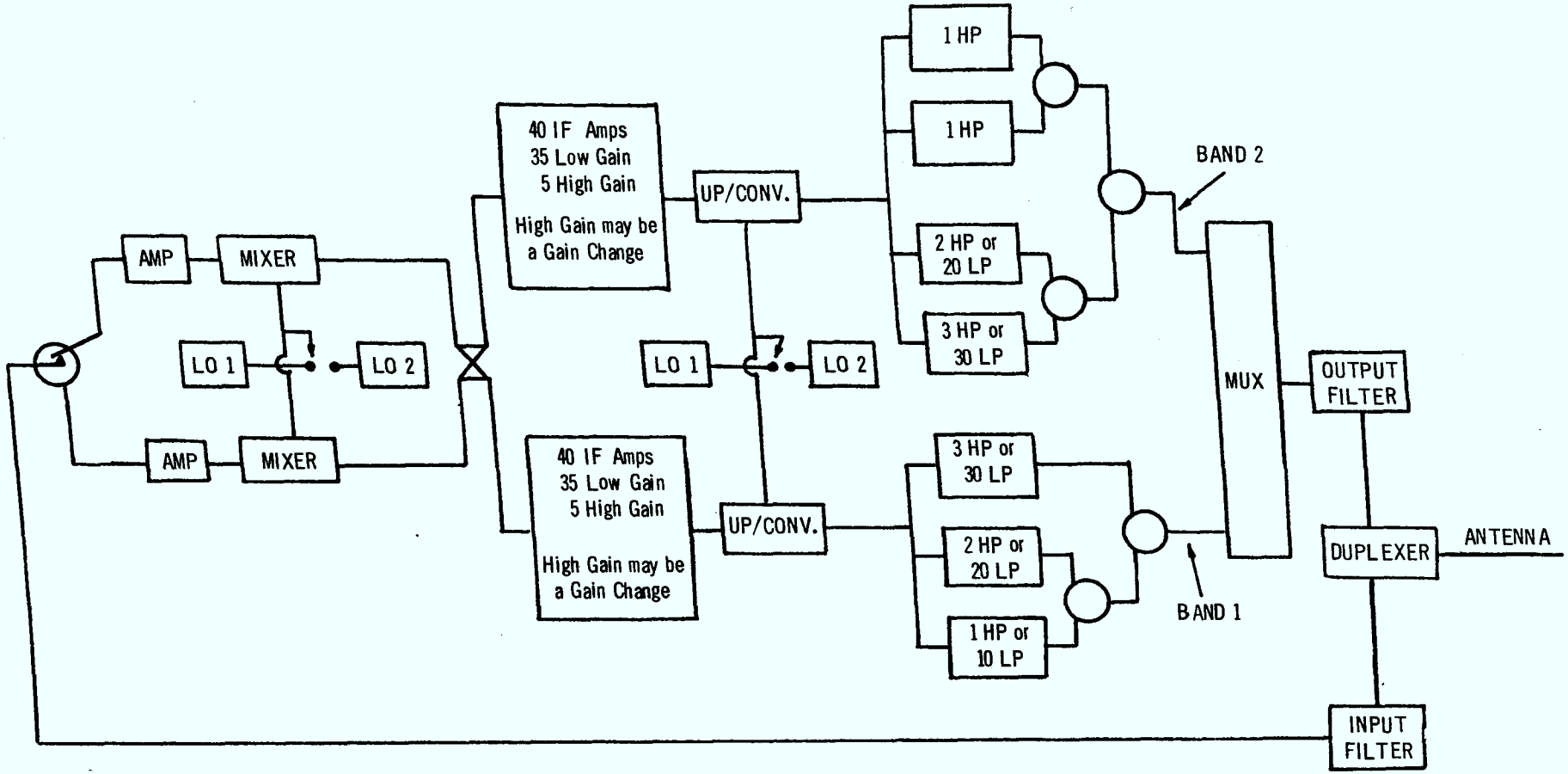

Figure 5.12 – Block diagram for the 300 MHz transponder

5.7 Transponder Configurations

5.7.1 Transponder for 300 MHz

The transponder is required to carry high power and low power carriers with 10 dB difference between them (see Figure 5.12). Because of this large difference in power level it is necessary to amplifiy the different levels in separate amplifiers and combine them in a linear circuit (i.e. a multiplexer). This reduces the amount of intermod energy created and comfines it all to the pass band of the multiplexer filters used.

The power output amplifiers are assumed to be adjusted for low intermod and high efficiency. These have a dynamic range of at least 3 dB over which low intermod is maintained. That is an amplifier that is sized for 30 low power carriers will operate with a satisfactory intermod level with only 20 carriers. The DC power level required for 20 carriers in a 30 carrier amplifier is greater than for the same 20 carriers going through a 20 carrier amplifier. However, the power drain of 20 carriers through a 30 carrier amplifier is lower than for 30 carrier through the same amplifier. In order to adjust the power drain for one type of service various sized amplifiers are provided. This allows the resources of the satellite to be switched from one type of service to another.

In the configuration shown in Figure 5.12 amplifiers of different sizes are provided which can be switch selected for operation into each channel of the multiplexer. Two (one and spare) of the amplifiers assigned to band 2 are class C specifically adjusted for one high power carrier. They cannot be used in any other way. Two class C amplifiers are provided because of the high use factor expected for one high power carrier. The other amplifiers assigned to band 2 are low intermod types sized for two and three high power carriers respectively. They can also be used for 20 (or 30) low power carriers.

The three amplifiers assigned for use with Band 1 are all low intermod types and are sized for a maximum of 10, 20 and 30 low power carrier. These may also carry one, two or three high power carriers respectively. It should be noted that one high power carrier passing through an amplifier adjusted for low intermod with 10 low power carriers has a higher DC power drain than the class C amplifiers sized for one high power carrier. Thus this use of the 10 carrier amplifier could only be justified under rather rare combinations of failures.

Preceding the output power amplifiers are appropriate up-converters and a number of paralleled IF amplifier strips. The maximum number of IF amplifiers required at any one time is 30. However, a certain number (5) are added for redundancy making 35. These are identical except for frequency and have a gain suitable for the low power carriers. In addition a number of IF amplifiers (3 plus 2 spare) with 10dB higher gain must be provided. These may be different amplifiers with special frequency assignments (as is assumed here) or some or all of the other 35 amplifiers can be provided with a switched gain adjustment. The output amplifiers are broadband so that the 10 carrier amplifier may be used with any of the 35 low gain IF amplifiers. If 11 carriers are required the output amplifiers can be switched without interruption of service and without changing frequency assignments.

The maximum number of IF amplifiers required for band 2 is identical to the number required for band 1.

Two local oscillators are shown both for the upconverter and for the mixer. These are not redundant units but are units oscillating at different frequencies. This facility is added so that the operational satellite and the in-orbit spare satellite may both be operated at the same time, the one using local oscillator 1 and the other by using local os-

cillator 2. The two satellites as well as the back-up unit on the ground are completely identical so that the unit on the ground can be used to replace either satellite in orbit in the event of a failure. Table 5.9 gives a summary specification.

5.7.2 Transponder for 2.5 GHz

This transponder (Figure 5.13) is somewhat similar in concept to the 300 MHz transponder. The radio program carriers at 25 dBW are amplified in separate amplifiers from the 15 dBW voice carriers. They are combined linearily in a multiplexer. There is less requirement at 2.5 GHz for flexibility of loading. The voice carriers, amplified in a 20 watt TWT, can be adjusted in loading by switching to a 10 watt mode. The program load may be reduced by making the standby unit a lower power level.

The 2.5 GHz transponder has a single frequency conversion. An input multiplexer is then required to separate the radio program carriers from the voice carriers. This configuration requires that the frequency plan on the up-link is identical to that in the down link including the separation between the program carriers and the voice carriers. If this can not be arranged then a double frequency conversion will be necessary, down to an IF frequency and then to the required down-link frequency. Program separation is done at IF frequencies and frequency shift is accomplished by using different up-converter local oscillator frequencies.

A double frequency conversion transponder with an IF amplifier stage would provide the possibility of cross-strapping between 300 MHz and 2.5GHz. A summary specification of the 2.5 GHz transponder is given in table 5.9.

5.8 Frequency Plans

5.8.1 Plan for 300 MHz

It is assumed in this discussion that the normal channel width is 20kHz and that the normal channel separation is 25kHz. The number of separate frequency assignments for band one is 40, including those required for redundancy. This makes a total of 1 MHz bandwidth. This

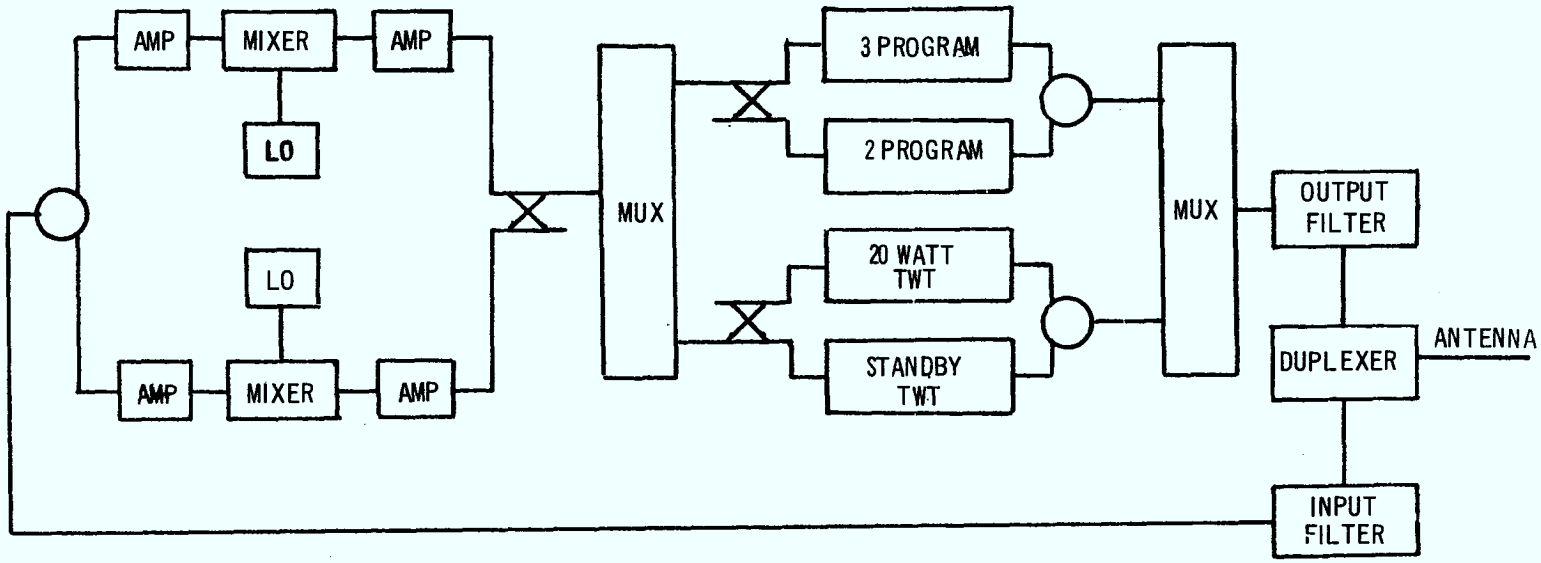

Figure 5.13 – Block diagram for the 2.5 GHz transponder

2.5 GHz SUBSYSTEM		
Type	Single Frequency Conversion	
Operation	F.D.M.A.	
Input	Uncooled Paramp	
Multiplexing	Graphite Fiber Epoxy Composite Waveguide Filters	
Weight	20 lbs.	
Services	Telephony	Broadcast
Number of Carriers	90	3
Output Device	TWT	Transistor
Output Power (dBW)	9.2	3.9
Eclipse	50 %	67 %

300 MHz SUBSYSTEM		
Type	Dual Frequency Conversion Fully Channelized at I.F.	
Operation	F.D.M.A.	
Input	Low Noise Amplifier	
Multiplexing	Interdigital Filters	
Weight	70 lbs.	
Services	Mobile	Transportable
Number of Carriers (Max.)	3	30
Number of Carriers (E.O.L.)	1	20
Output Device	Transistor	Transistor
Output Power (dBW) (Max.)	16.1	16.1
Eclipse	1	10

Table 5.9 – Specifications for the Dual-Frequency Transponder (Single Satellite Service)

must be doubled to accommodate the operation of the second satellite (i.e. the second local oscillator). Band 2 has the same total of 40 channel assignments and thus has the same total bandwidth requirements.

The minimum filter width considered acceptable from an insertion loss point of view is about 4 MHz. It is assumed, however, that two bands, both 5 MHz wide can be obtained at both up-link and down-link frequencies for the exclusive use of Canada. These bands should both be as high in frequency as possible. The minimum separation between centre frequencies of the two bands should be about 10 MHz. Because the transponder is a double frequency conversion type the frequency separation between the two up-link bands need not be the same as between the two down-link bands. The location of the bands in both up-link and down-link are shown in Figure 5.8. These locations are considered most advantageous from overall systems aspects. One possible way of utilizing the spectrum within the bands is shown in Figure 5.14. Both the up-link and the down-link bands are identical in internal arrangement.

5.8.2 Plan for 2.5GHz

The number of simultaneous frequencies at 2.5GHz is 90, however, the number of frequency assignements must be 180 for a total frequency band of 4.50 MHz. This is approximately equal to the minimum bandwidth obtainable with a waveguide filter. It would be desirable to have an allocation of 5 MHz for band 1 to give an even 100 duplex channels with 25 kHz channel spacing. For band 2 only three program channels of .250 mHz each are being used. An allocation of 3 MHz is assumed for this service. This is nominally enough bandwidth for twelve program channels. The three proposed broadcast channels can be placed in intermod free locations. This service could be expanded in a second generation satellite system. Alternatively, a narrower allocation with higher multiplexer loss could be tolerated because of the small total load of the broadcast service. Because the transponder shown in Figure 5.15 has only a single frequency translation

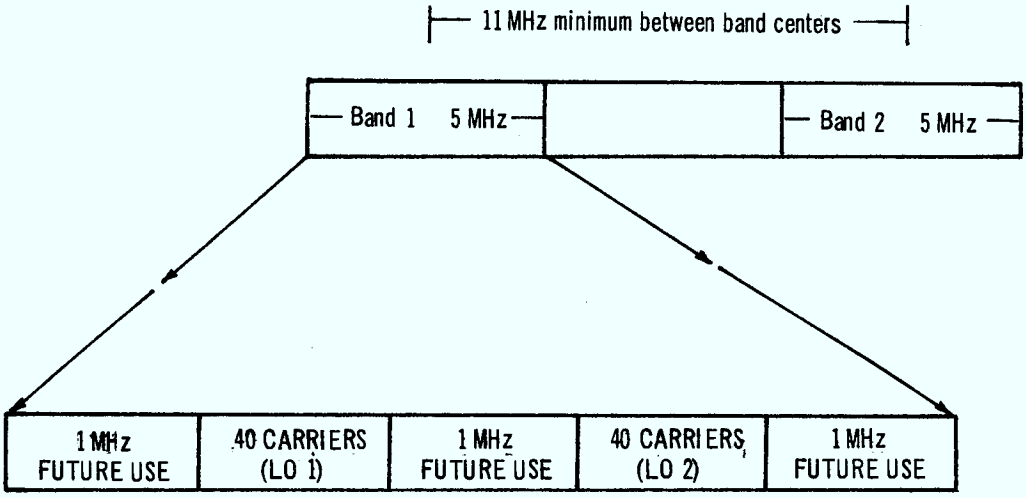

Note 1: Band 2 is identical to Band 1

Note 2: The separation between band centers need not be the same on the up link as on the down link but should not be greater than 20 MHz in either case.

Figure 5.14 – Frequency plan for the 300 MHz transponder

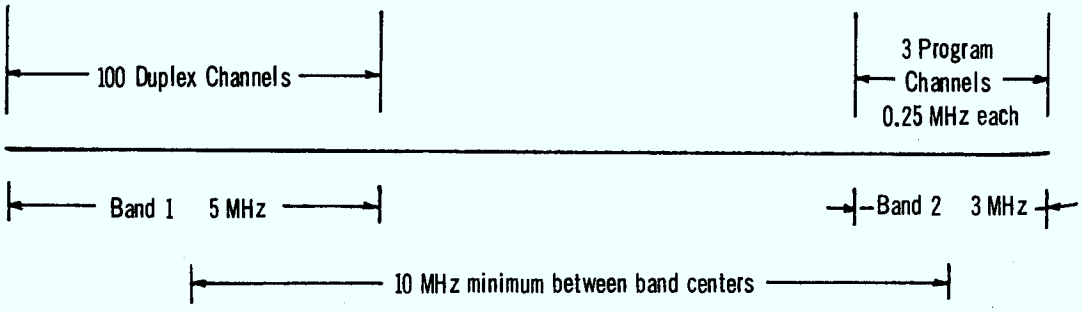

Note: The up link frequency plan must be identified to the down link frequency plan.

Figure 5.15 – Frequency plan for the 2.5 GHz transponder

the frequency separation between the two bands in the up-link must be the same as in the down-link. If this is not possible then the transponder must become a dual frequency conversion type with an IF amplifier section. This has the additional advantage that cross-strapping between 300 MHz and 2.5GHz would then be possible. Some additional IF amplifiers with separate frequency assignments would need to be added to go from 300 MHz to 2.5GHz as well as some to go from 2.5GHz to 300 MHz. These would have to have a different gain than the other IF amplifiers.

6.0 ANTENNAS FOR THE TWO BAND SATELLITE

- Mechanically Despun Dual Frequency Design for Spin Stabilized Satellite.
  - 300 MHz Net Edge Gain 15.7 dB
  - 2.5 GHZ Net Edge Gain 29.5 dB
- Alternative Designs for Three Axis Stabilized Spacecraft
- Discussion of Electronically Despun Antennas

6.0 ANTENNAS FOR THE TWO BAND SATELLITE

6.1 Introduction

The major consideration in selecting an antenna design for the two band satellite is that the antenna system must operate at two widely different frequencies - 300 MHz and 2.5 GHz. Three choices present themselves - to use an antenna with an electrical bandwidth spanning this whole frequency range, to use two completely separate antennas, both electrically and structurally, or to use two antennas which are separate electrically but share as much structure as possible. The choice between these approaches must be based on the provision of net gain sufficient for operation of the communications system with the required traffic capacity, within the physical launch size limitations imposed for the spacecraft by the fairing and at a low enough weight to remain within the launch weight limitations for the spacecraft, and to comply with secondary considerations of despun weight and spacecraft stability.

In this study maximum use was made, where possible, of previously available information, and in particular of information generated during the previous study of a "UHF Communications Satellite System" referred to here as Reference A. The remaining portions of this section show that the spacecraft antenna requirements of the two band satellite system, for the dual spin configuration are best met by a deployable antenna of the type selected for the 1.5 GHz design in the UHF satellite study, having a dual feed system operating at 300 MHz and at 2.5 GHz. In the three axis configuration the antenna requirements can be met either by a similar design, or by a quad-helix array at 300 MHz (as proposed in Reference A) surrounding a parabolic dish for the 2.5 GHz signal.

6.2 Antennas for Dual Spin Satellites

6.2.1 Antenna design limitations

The fundamental design limitations on the antenna for the two band satellite can be described as follows.

(a) Net gain. The minimum effective antenna gain within the required coverage area after subtraction of all system losses, must be sufficient to make it possible to meet the traffic requirements at both frequencies. These are specified in terms of EIRP seen from the ground over the coverage areas. Reference to Section 4 will show that the minimum traffic requirements demand minimum net antenna gains at 300 MHz of 13 dB, and at 2.5 GHz of 25.9 dB. (Higher traffic capacities can be obtained with net antenna gains of 15.7 dB at 300 MHz and 25.9 dB at 2.5 GHz, and it is shown here that these are obtainable with the proposed antenna configuration). These figures assume losses in the transmission path to the antenna, including the rotary joint, of 1.8 dB.* The antenna gains quoted above are "edge gains" - i.e. gains in the direction of the edge of the area covered. Effectively these are the minimum gains observed within the coverage area.

These figures for required gain are obtained on the basis of a specific assumption as to available power (and its division between the two frequencies). The available power is taken as that from a surface mounted array on a cylindrical body of maximum diameter (86") and height (92") available in the cylindrical portion of the fairing. (See Figure 2.2 of Section 2, on page 17).

* For design purposes the antenna interface for net gain specification was stipulated at the transponder output flange.

(b) Physical size at launch. The antenna size and, hence, gain is limited by the fairing dimensions. There is, in fact, a trade-off between available power (i.e. size of the solar cell array) and available antenna gain since the shorter the spacecraft body is, the larger the antenna can be, within the same shroud dimensions. However, the trade-off turns out not to be a very sensitive one, so all design was done assuming a spacecraft of maximum height (92") permitted by the cylindrical portion of the fairing. This leaves 65" launch height for the antenna.

Assuming a deployable parabolic antenna of the type discussed in Reference A, similar to those used in the Apollo lunar-landing missions, this permits about a 130" diameter deployed dish, using a single fold deployment technique (Figure 6.1).

6.2.2 Available Antenna Gains

In order to maximize traffic capacity with a given available power, it is necessary to maximize the minimum antenna gain toward any point in the coverage area. This minimum gain, in the case of Canadian coverage, will be the gain at the edges of the coverage or the edge gain. The minimum peak antenna gain which will provide a given edge gain depends on the wavelength and can be derived for circular apertures from Figure 6.2, which is repeated from Reference A. The maximum angular extent of Canadian coverage may be taken as 8° (including pointing errors).

From Figure 6.2 it can be seen that the maximum value of edge gain for 8° coverage will be 23.5 dB, which will be obtained with an antenna of 9.5 wavelengths diameter. At 300 MHz, however, this is 390 inches diameter, and is not feasible within the launch limitations. The gain available from a 130" diameter dish at 300 MHz is 18.3 dB peak

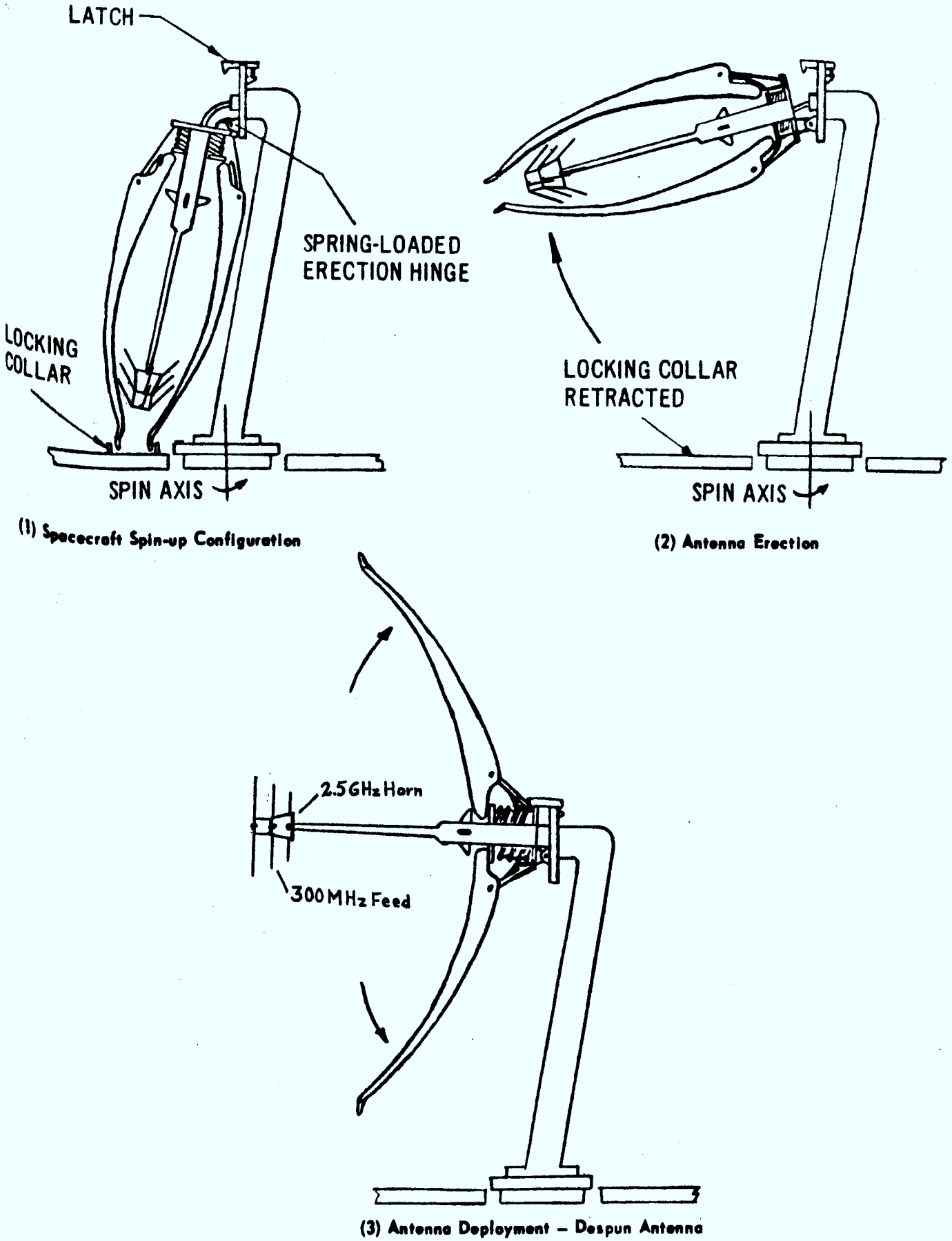

Figure 6.1 – Deployable Antenna Concept

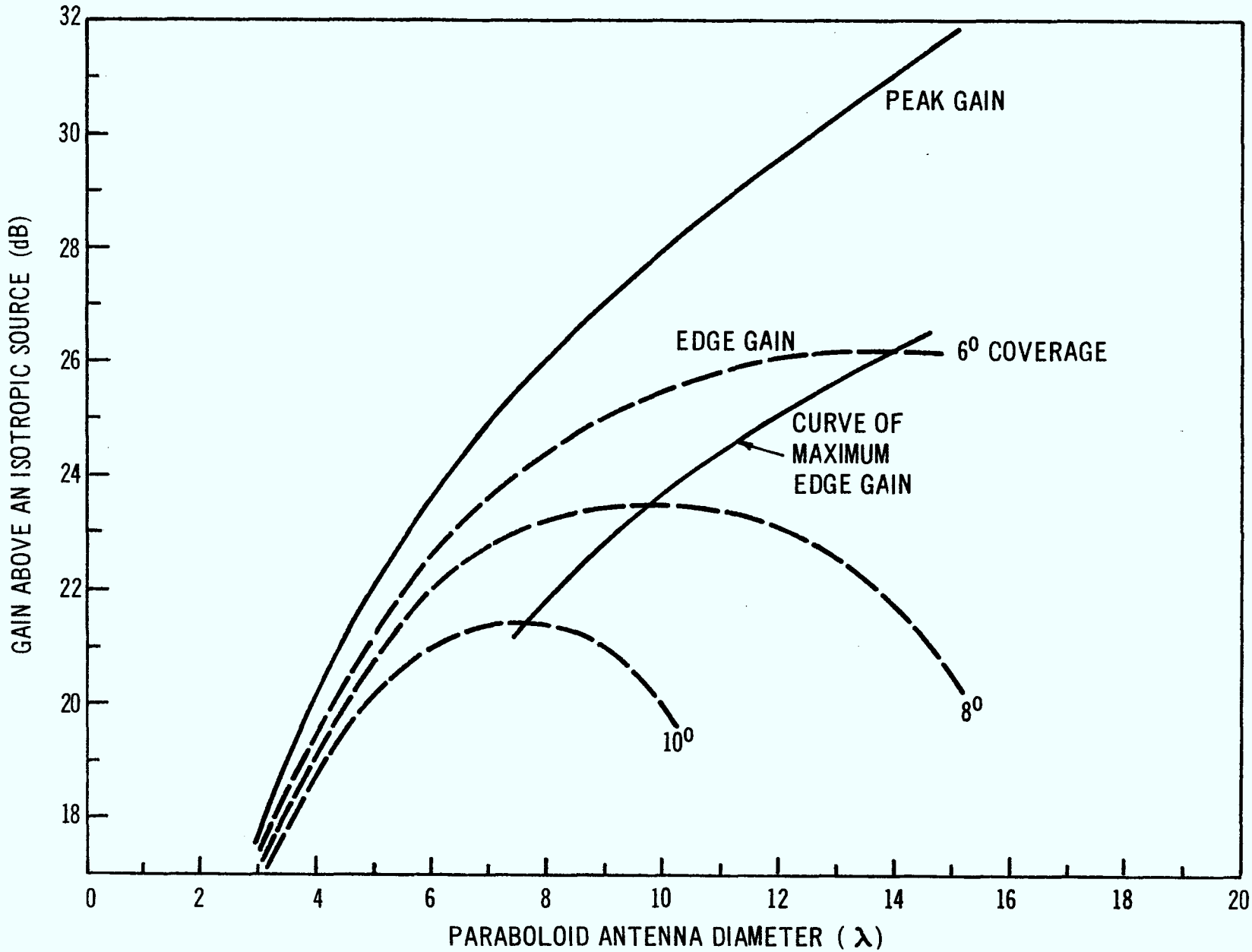

Figure 6.2 – Peak gain and edge gain variation with paraboloid diameter

or 17.5 dB at the edge of 8° cover. At 2.5 GHz the situation is different. The 9.5 wavelength diameter is only 44.6 inches, and can be easily accommodated within the available volume. If a 130 inch deployable dish for 300 MHz is used, the central portion of the dish only, can be illiminated at 2.5 GHz. Thus, we can readily obtain the 23.5 dB edge gain at 2.5 GHz.

In practice with scope for larger aperture dimensions at 2.5 GHz, we would modify this slightly by using an elliptical (4° × 8°) beam, narrower in the north-south direction than in the east-west, to maintain a constant edge gain around an elliptical contour approximating Canadian coverage). This beam would have a gain about 3 dB higher than the circular beam, i.e. a 26.5 dB edge gain.

That is, by using a 130 inch diameter deployable antenna of the type shown in Figure 6.1, edge gains of 17.5 dB at 300 MHz and of 26.5 dB at 2.5 GHz would be available.

6.2.3 Mechanical Design and Deployment

The antenna is an umbrella type deployable parabolic antenna, with a mesh surface, similar to those constructed by RCA Corporation for the Apollo lunar surface missions. The deployment method proposed for the present application is illustrated in Figure 6.1 and in Figure 6.3. These figures are identical to those in Reference A except for the size of the antenna itself. It may be noted that a double fold scheme of the same general type can also be used with a slight weight penalty.

6.2.4 Feed System

The antenna must be fed by a two frequency feed, producing illumination of the whole surface at 300 MHz, and of a central elliptical region

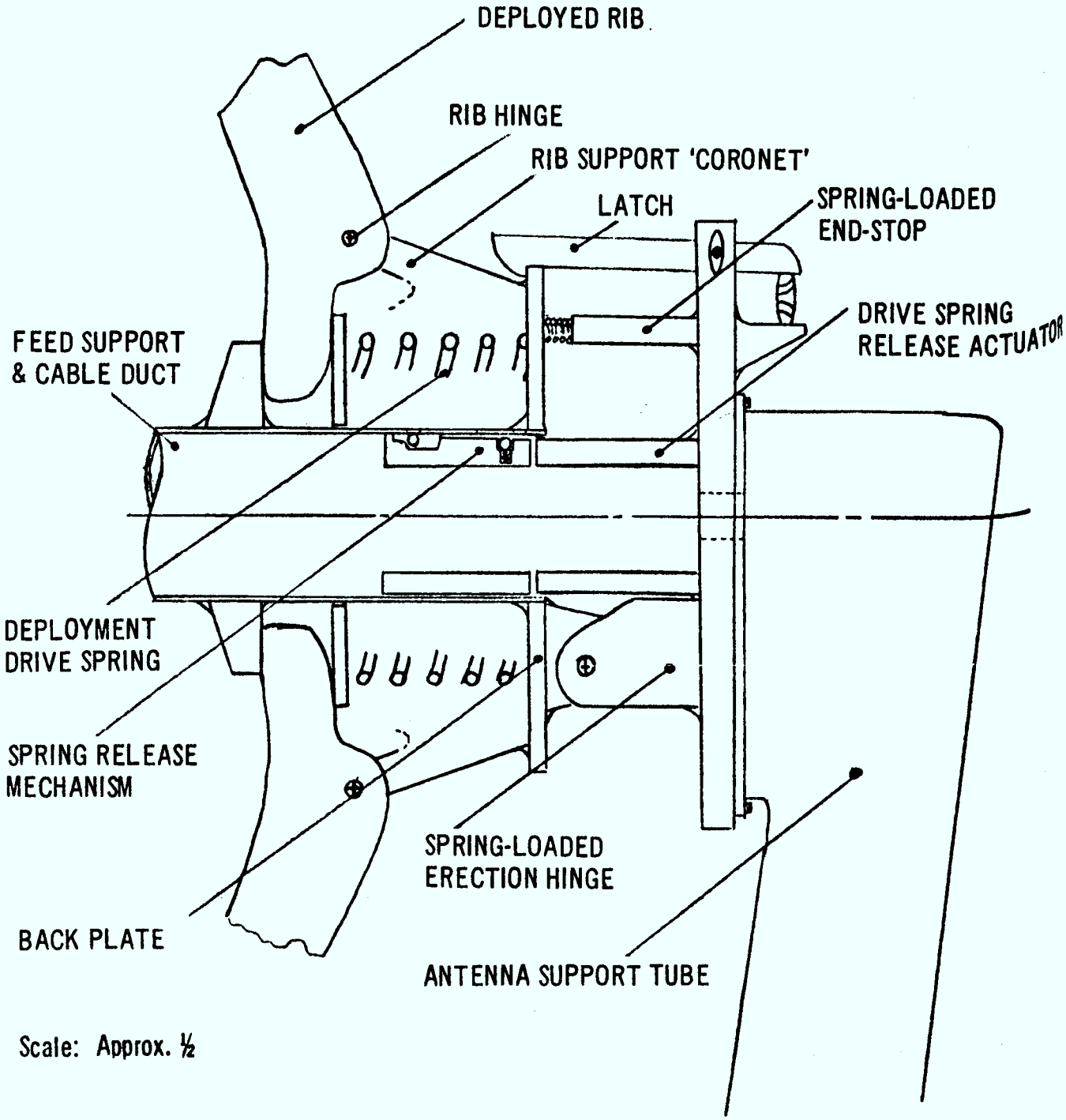

Figure 6.3 – Deployable Antenna Mechanism

45 inches by 90 inches at 2.5 GHz. It might be possible to design a broad band feed covering the whole 8.3 to 1 frequency band separating these frequencies. However, it is simpler and equally effective to use a compound feed having the same phase centre at the two frequencies.

It is necessary that circular polarization be used at 300 MHz, because Faraday rotation in the ionosphere at this frequency is excessive. At 2.5 GHz it is possible to use linear polarization, since the maximum Faraday rotation expected at this frequency is about 25 degrees at sunspot maximum, in daytime, at the most susceptible location. Expected rotations at other times and places are substantially less.

The simplest form of dual frequency feed would be a linearly polarized horn at 2.5 GHz surrounded by crossed dipoles, with reflector and director elements (Figure 6.4). These elements would have to be deployed in space after the parabola was open. The horn and the dipoles would be supported on a central post along the axis of the parabola. An alternative method would be to use a helix as the 300 MHz feed surrounding the horn, with radial rods as a ground plane (Figure 6.5). The blockage presented by these elements at 2.5 GHz would be negligible. The radial rods would be flexible and would be made self erecting, by having them bent toward the axis of the antenna prior to erection, being released only at or after erection of the antenna.

There would be no significant difference in weight in the two approaches.

6.2.5 Weight

The basic weight of the 130 inch deployable antenna is estimated from the curve of Figure 6.6 which is based on information from RCA

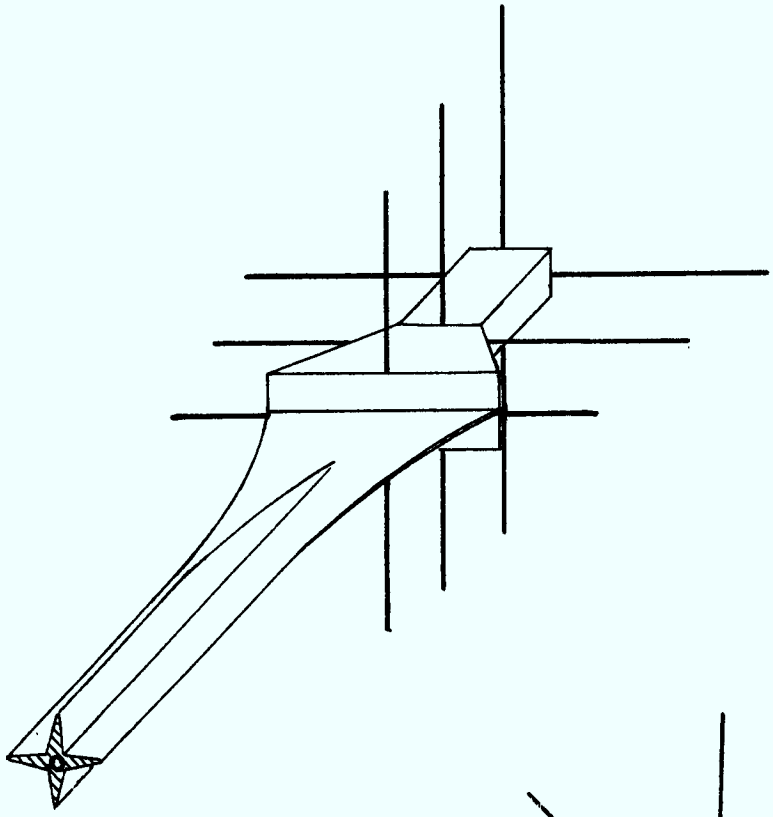

Figure 6.4 – Two-band feed with crossed dipoles

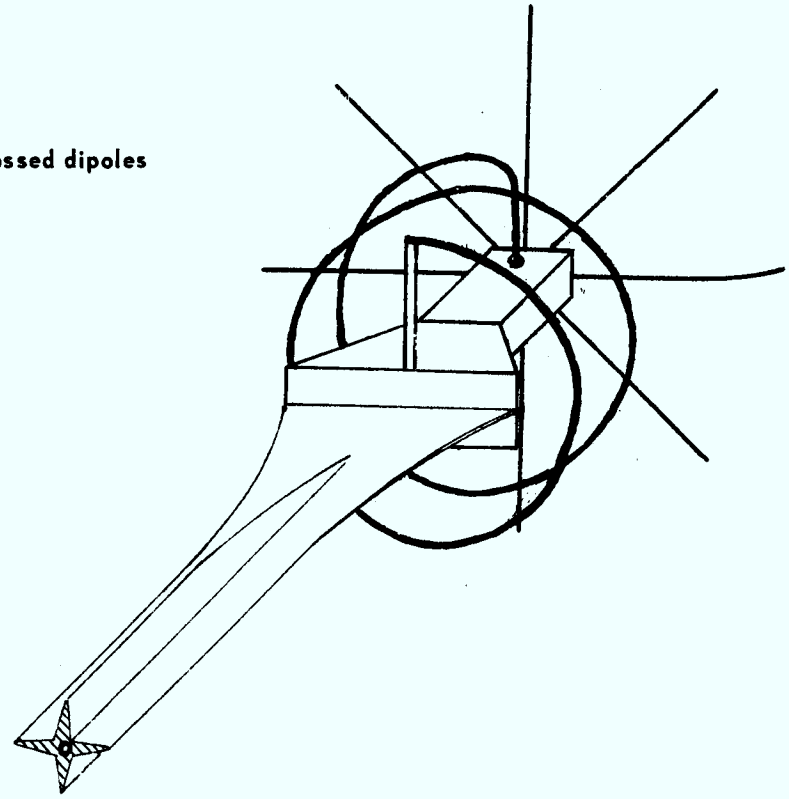

Figure 6.5 – Two-band feed with helix

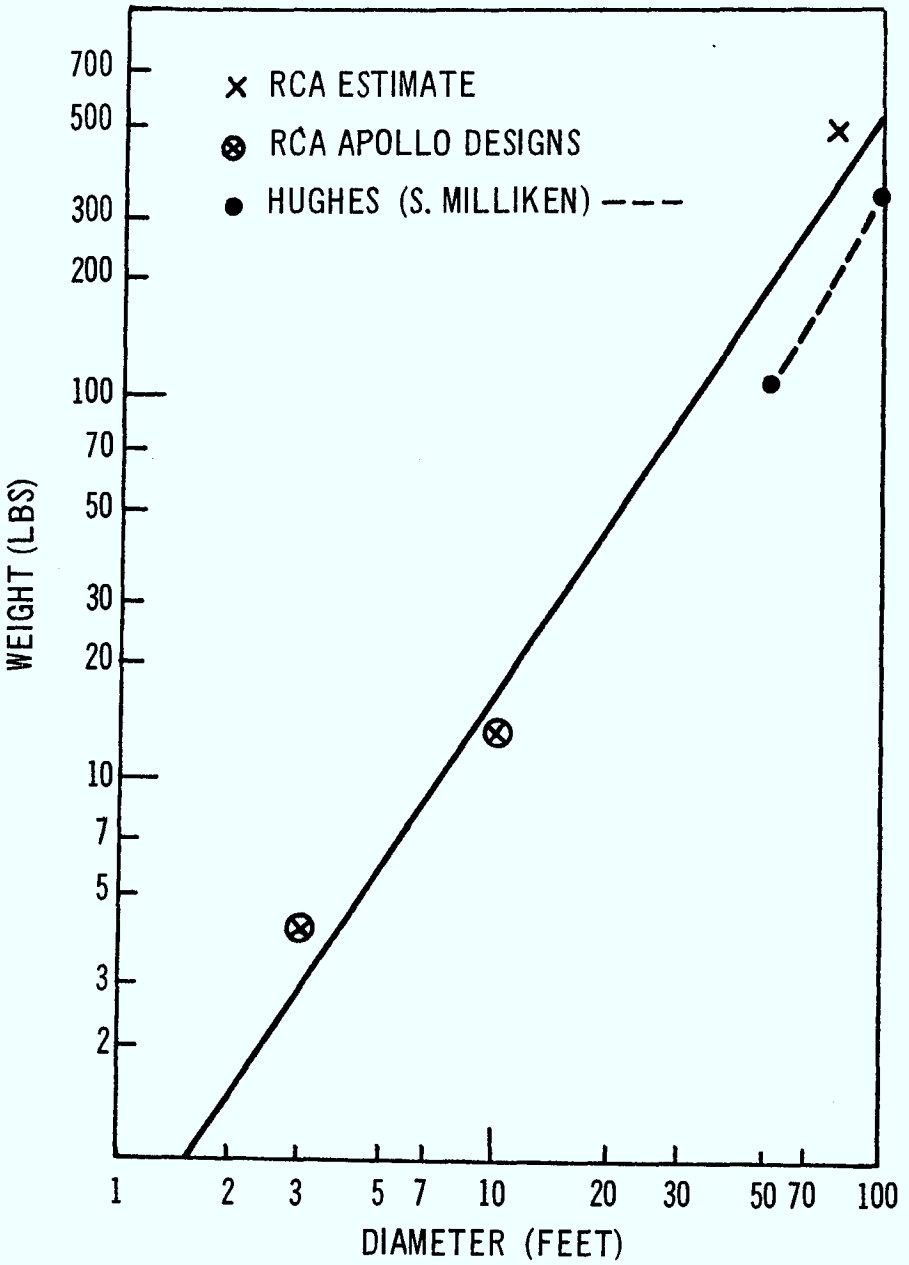

Figure 6.6 – Weight-diameter for deployable (Umbrella Class) paraboloid antennas

Corporation and Hughes Aircraft. A figure of 18 lbs is obtained, including allowance for a conventional feed. To this are added estimates for the weight of the supporting column, etc., as follows.

Basic Antenna	18.0 lbs
Deployment Mechanism	4.0 lbs
Support Column	15.0 lbs
Attachment Collar	3.0 lbs
Additional allowance for added feed complexity	2.0 lbs
Total Estimated Weight	42.0 lbs

6.2.6 Transmission System Losses

The losses encountered in the transmission line and in the rotary joints must be subtracted from the antenna gains quoted here to give net antenna gain referred to the transponder. Estimated losses for the rotary joint are 0.3 dB at 2.5 GHz and 1 dB at 300 MHz. To these must be added 0.3 dB for line losses at 2.5 GHz and 0.8 dB for losses in the transmission line, and power splitter and phaser (for circular polarisation) at 300 MHz.

Thus the net antenna gains for the deployable antenna on the dual spin satellite are 15.7 dB at 300 MHz and 25.9 dB at 2.5 GHz. These are edge of cover gains with allowance made for pointing errors.

6.3 Electronically Despun Antenna (300 MHz)

6.3.1 General

The use of an electronically despun body-mounted array as an antenna for the low band of the two band UHF satellite is an attractive possibility. It would avoid the necessity for a single mechanically despun antenna required

to operate at both frequencies, and for a two frequency rotary joint, and it would allow use of a much smaller mechanically despun antenna for the high band only. This is desirable for reasons of dynamic stability. It also offers the possibility of avoiding the necessity for an unfurlable antenna at the high band. Accordingly the possibility was examined in some detail.

Various aspects covered by the investigation were:

(1) availability of sufficient gain for useful communications traffic.

(2) nature and design of the radiating elements.

(3) phasing of the radiating elements.

(4) losses

(5) weight

In view of difficulties encountered in obtaining a definitive answer to point (1), the investigation of points (2) to (5) was carried only to the feasibility level. In many cases it was found useful to refer to the design details available on the antenna system for the LES6 satellite, which used a despun antenna, although of somewhat less gain than that required here.

The first step was to determine if it was possible, using the available area on the cylindrical body of the satellite, to obtain sufficient gain to give useful communications capability, with the power which could be obtained from the solar cells, also mounted on the cylindrical body. At this point, extensions to the body to obtain either greater antenna area, or greater solar cell area, were not considered.

6.3.2 Estimating Available Gain of the Array

The maximum gain available from a given size and shape of surface available for the radiating elements of an electrically despun array can be approached in several ways.

One approach is to appeal to the principle that, for antennas consisting of a more or less two-dimensional radiating surface, the gain (directivity) cannot exceed that of a uniform phase, uniformly illuminated aperture of the same projected area, i.e. $G = \frac{4\pi A}{\lambda^2}$. (For comparison with a gain figure calculated from individual element gains, if we assume the individual radiating element has an effective area of $\frac{\lambda^2}{4}$, it will make a maximum contribution to the total gain of $\frac{4\pi}{\lambda^2}\left(\frac{\lambda^2}{4}\right)$ or π, i.e. 4.97 dB. If the individual element gain is higher, it must occupy a larger surface area, or its gain will be reduced by mutual coupling effects).

Of the 86 inch diameter of the spacecraft, only about 120° will be available as effective aperture at any one time (Figure 6.7). Elements outside of this arc will contribute so little to the radiation in the given direction that it will not justify the extra complexity to excite them. (Even the contribution of elements near the extremes of the arc will be somewhat reduced because of the orientation of their element patterns). Thus the effective width of the aperture will be about 2(43) cos 60° or 74.6 inches. Assuming the whole height (92 inches) of the spacecraft body is available as effective aperture, the aperture area then is 74.6" × 92" or 6863 square inches. At 300 MHz or 1 metre wavelength (39.37 inches) this is 4.43 square wavelengths. The gain $(4\pi A/\lambda^2)$ corresponding to this is 55.7 or 17.6 dB.

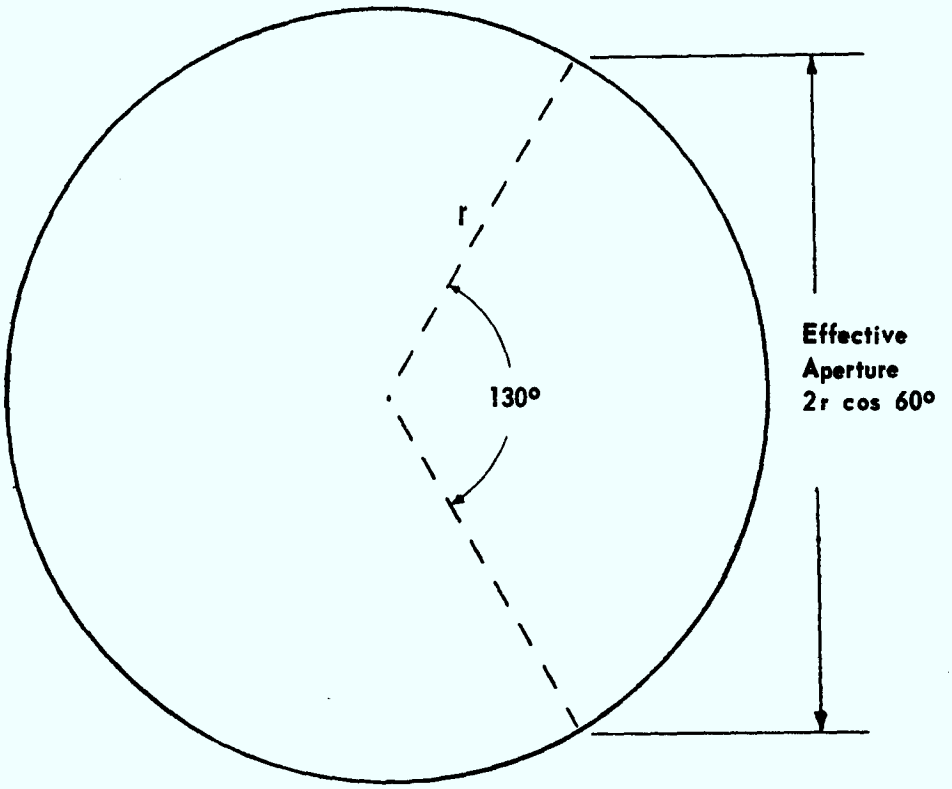

Figure 6.7 – Available aperture for a body mounted array

This figure is useful as an upper bound to the available gain, but it is probably higher than the value which could actually be obtained, since the contributions due the elements near the extremes of the aperture (in the circumferential direction) will be decreased by the element pattern. (On the other hand, if the element centres are at the edges of the specified 74.6 inch aperture, the effective area of the elements will extend about $\frac{\lambda}{4}$ beyond the actual aperture, giving a potential 1 dB further gain to give 18.6 dB).

To get a more accurage value for gain we would have to perform a pattern integration for a specific distribution of radiating elements on the cylindrical surface. In fact, to obtain a figure for maximum gain we would have to perform a number of such integrations for different element distributions. As we did not have access to a working computer program for such a calculation, it was beyond the scope of this project. However, using available design curves we can at least make an estimate of the distribution of radiating elements which is likely to give maximum gain. Let us consider the same 120° × 92" area. The 92" height represents 2.34 wavelengths at 300 MHz. In this distance we could have 3 elements with 0.9 λ spacing, 4 elements with 0.6 λ spacing, or 5 elements with 0.45 λ spacing. This is the axial direction. In the other direction (the circumferential direction) we could have from 2 to, say, 5 elements in the 120° arc around the cylinder. That is, we might have from 6 to 25 elements on this cylindrical surface. For an accurate assessment of the pattern and gain due to each of these distributions of elements, a detailed computer calculation would be required as indicated above. However, it is possible to get an approximate value for the array gain by assuming the gain function to be separable so that array gain = (element gain) ×

(array gain factor in "a" direction) × (array gain factor in "b" directions). Referring to curves of array directivity vs element spacing (Figure 6.8), of the three choices given above for element spacing in the axial direction, the highest array directivity (6.8 dB) is obtained from 4 elements with 0.6 λ spacing.

In the other direction, we have a curved aperture of about $\frac{2\pi}{3}$ (43) or 90 inches. This represents one third of the total circumference of 270 inches. We might consider any number of elements equally spaced around the circumference from, say, six to twelve or more. With six or seven elements the 90 inch arc will encompass two elements, making allowance for elements with dimensions about $\frac{\lambda}{2}$ in the circumferential direction, or three, if the element centre may be close to, or at the edge of the aperture. For other element spacings the situation is shown in Table 6.1. The second column gives the number of elements which can be accommodated if the centres of the outside elements must lie at least $\frac{\lambda}{4}$ within the boundary of the 120° arc, while the third column gives the number of elements possible if the centre of the element may lie near or at the boundary of the 120° arc.

Table 6.1 Number of Elements in 120° Arc for Various Spacings

(Number in bracket is length of chord separating extreme elements)

Total Number of Elements Around Circumference	Number in 120° arc allowing for circumferential dimension $\frac{\lambda}{2}$	Number in 120° arc allowing element centre to be near limits of aperture
6	2 (43")	3 (75")
7	2 (37")	3 (67")
8	3 (61")	3 (61")
9	3 (55")	4 (75")
10	3 (51")	4 (70")
11	3 (47")	4 (65")
12	4 (61")	5 (75")

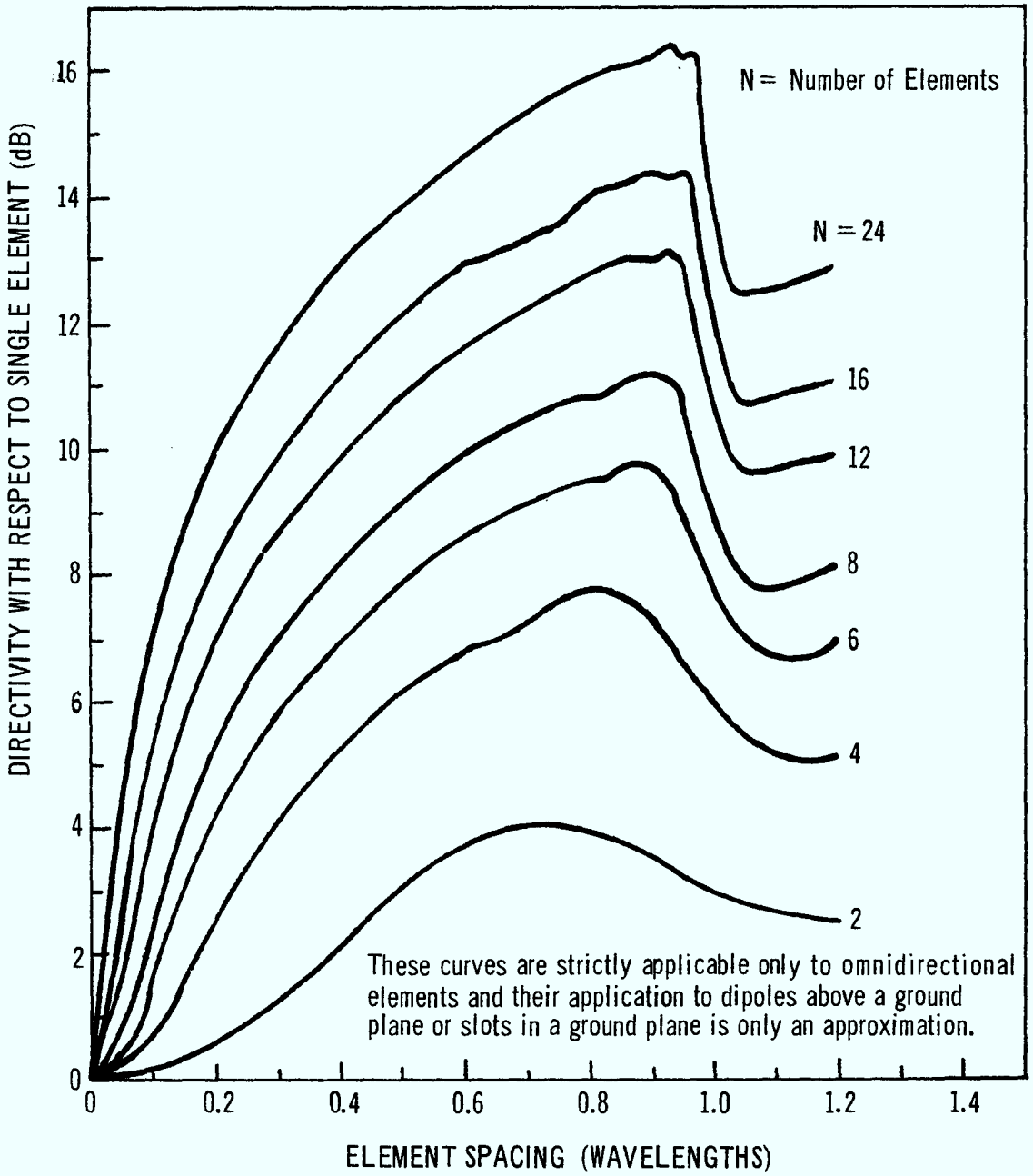

Figure 6.8 – Array Directivity vs Element Spacing

The bracketed number is the projected width of the aperture between extreme element centres. This, divided by (number of elements - 1) gives the average element separation (at right angles to the direction of "forward" radiation). Since the elements do not lie in a straight line, and since effective element separation (i.e normal to the forward direction) is not constant for four or more elements, the curves of Figure 2 do not apply exactly, but they should give a reasonable approximation to the situation. For three elements out of seven, and three elements out of eight, excited the curves predict a gain of slightly more than 6 dB over a single element, and for four elements out of nine excited they predict 7 dB over a single element. There is no apparent advantage in having more than nine elements around the circumference.

That is, the gain by exciting a 4×3 array of elements is predicted to be 12.8 dB over a single element, and that by exciting a 4×4 array is 13.8 dB. Assuming an element gain of 5 dB, the total gain from a 4×3 array would be 17.8 dB and that from a 4×4 array as 18.8 dB.

The comparison with the gain prediction for the uniformly illuminated aperture suggests that these figures may be a trifle optimistic, so the absolute gain figures should not be taken too seriously, but they may be taken as indications of the optimum element distribution. There are also two other factors which are associated with the fact that the elements lie on a curved surface which were not taken into account in the above "projected aperture" considerations. The first factor is that the elements at the ends of the aperture in the circumferential direction, will have radiation patterns with maximum gain at an angle to the forward direction of the array and therefore will contribute slightly less to the net field

than would the elements of a planar array. This will tend to decrease the total gain slightly. The second factor is that, because the radiating aperture has a substantial dimension in the direction of the forward beam, it will have an element of "end fire" gain. This will tend to increase the total gain slightly.

All we can say, then, is that with four rows of nine elements around the circumference, exciting sixteen elements at a time to radiate in the "forward" radial direction, maximum gain should be obtained, and this gain is expected to be in the region of 18 ± 1 dB. This figure represents peak gain from which a further 0.8 dB must be substracted to give edge gain of 17.2 ± 1 dB. In addition, losses in the phasing, switching and power division network must be included. In Section 6.3.5 these are estimated at 3.3 dB, leaving a net edge gain range of 13.9 ± 1 dB.

This is a sufficient gain on which to base a useful satellite design but the range of uncertainty is too great to be used as the basis for a specific design. It would, clearly, be desirable to take the further step of making a complete computer integration of the pattern to determine the directive gain. The technique for this calculation for arrays on cylindrical surfaces has been given by various sources (Ref. 1, 2, 3) but (as mentioned above) a working computer program for the calculation was not available, and the resources of time and funding in this program did not allow establishing one.

6.3.3 Radiating Elements

A number of different types of radiating element are possible. Some of the considerations in selecting a type of element are the following

(1) it should add little or nothing to the radial dimensions at launch

(2) deployment if required should be automatic or as simple as possible

(3) it must produce circular polarisation (4) there should be as little degradation as possible in the axial ratio of the circularly polarized signal radiated by the element at large angles (up to 70°) from the radial direction (5) it should produce minimum interference with the solar cell array, i.e. it should produce minimum shadowing if it is elevated "above" the surface, or, if it is part of the surface, it should occupy as little area as possible.

On the basis of several of these criteria, crossed, cavity-backed slots would seem to be a very convenient form of radiating element. (Figure 6.9). They do not project, they produce no shadowing, and they are readily fed to produce circular polarisation (by adjusting the slot lengths). The area which they occupy is modest, 3-6% of the surface, reducing the available power by this amount. The only characteristic in which they suffer in comparison to other types of element, is in axial ratio of the "circularly" polarized signal at large angles to the radial direction.

The type of element used in LES6, could be expected to show a more constant axial ratio. It is a combination of a surface slot (cavity-backed) and a dipole elevated above the surface, both slot and dipole being parallel to the axis of the cylindrical surface (Figure 6.10). However, it has the problem of either requiring deployment after launch, or of requiring the diameter of the satellite body to be reduced slightly, reducing solar cell area, to fit into the fairing. Shadowing of the solar cells is also a potential problem, the nature of which has been discussed in Section 4.2.1. This can be partly overcome by special design provisions in setting up the solar

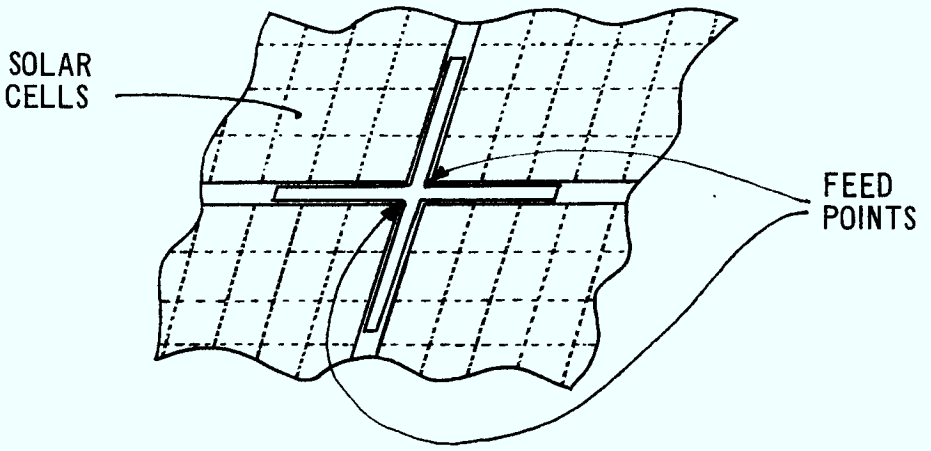

Figure 6.9 – Crossed-slot element

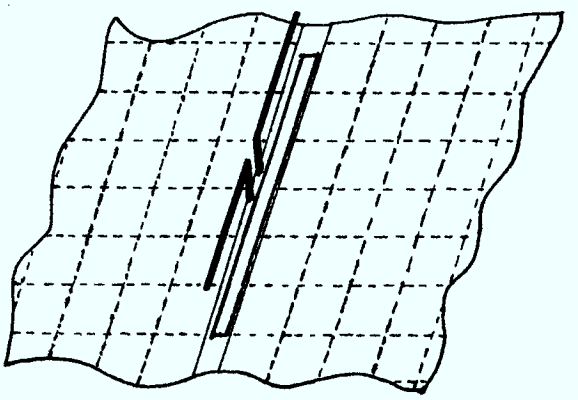

Figure 6.10 – Dipole-slot element

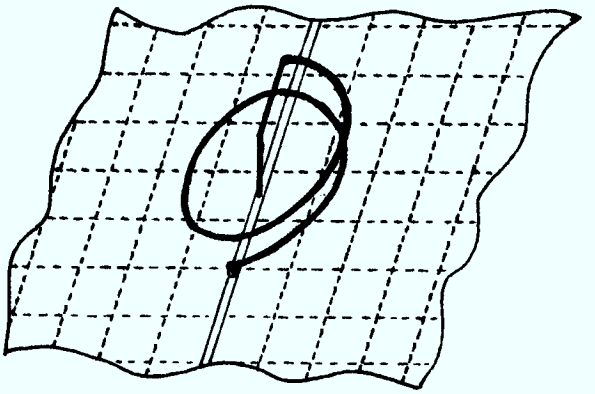

Figure 6.11 – Helix element

cell chain, but introduces extra cost and complexity.

Short helical elements are a third possibility (Figure 6.11). These are easy to feed and would be relatively easy to deploy as compressed springs. They would retain their axial ratio reasonably well to large angles. The problem again is the potential effect of shadowing.

It is probable that a system could be developed using any one of these three types of element. Experimental measurements on elements mounted on a model of the actual surface would be necessary to decide which was optimum for this mission.

6.3.4 Phasing of Elements and Switching

The phasing and switching for this application is much more complex than for LES6. At any instant energy is radiated from four out of nine elements in each of the four rings of elements around the spacecraft body. The energy is successively switched between nine combinations of four adjacent elements, i.e. 1234, 2345, 3456, 4567, 5678, 7891, 8912, and 9123, in Figure 6.12. This gives nine "forward" (radial) directions of radiation. Since the 3 dB beamwidth from these would be of the order of 40°, gain variation would be considerable if only these nine "forward" beams were used, switching every 40° of spacecraft rotation. The gain variation can be reduced by additional switching between two or more beams generated by different phasing of the four elements excited during each 40° of spacecraft rotation. However, this further complicates the switching and phasing.

With only one beam generated from each four elements the gain variation is 3 dB, going through one cycle every 40°. With two

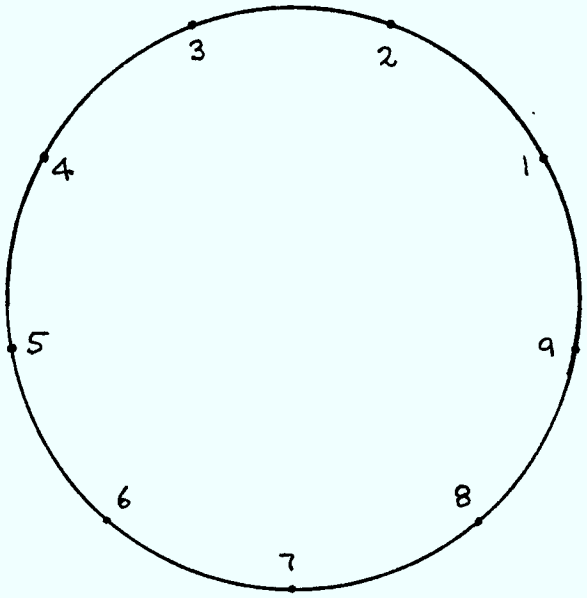

Figure 6.12 – Element positions on spacecraft circumference

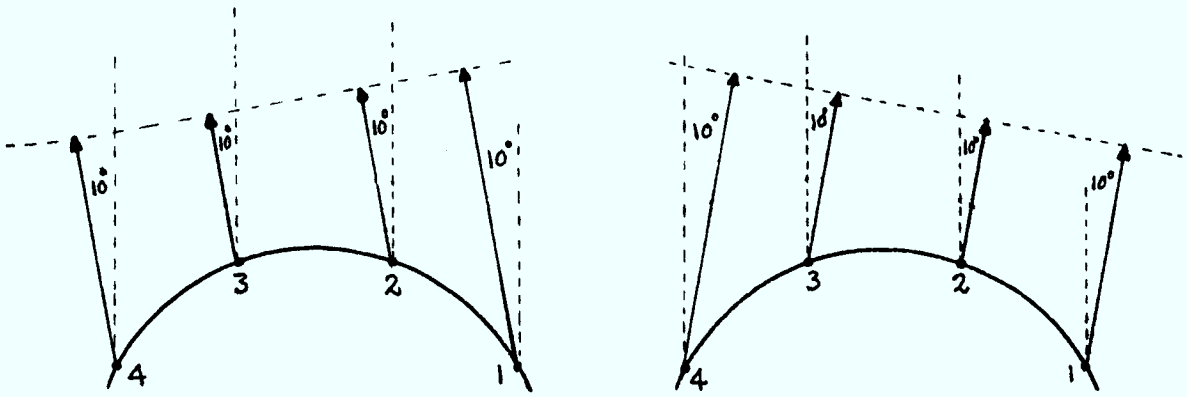

(a) 10° Counterclockwise

(b) 10° Clockwise

Figure 6.13 – Phasing of four elements to give two beams

beams, the switching is at 20° intervals and the gain variation 0.8 dB. With three beams, the gain variation is 0.3 dB, switching every 13° or 27 times during a revolution. Beyond this the improvement is slow.

Since the minimum gain is the value which determines the acceptability of the link, the one beam per sector solution would mean accepting a further 3 dB reduction in antenna gain. Although this would mean a much simpler switching and phasing problem, it cannot be considered acceptable. If the 3 dB loss could be tolerated, it might be used better by reverting to the LES6 situation of exciting only two adjacent elements, using two beams per sector, and perhaps increasing the number of sectors slightly. This would give a much simpler switching and phasing situation.

If we form two beams per sector from the 4 by 4 array being considered here, we require to provide phases for the four elements in each ring to produce beams at +10° and -10° from the radial line through axis of symmetry of the four excited elements, i.e. between elements 2 and 3 (Figure 6.13). Let ϕ_1, ϕ_2, ϕ_3, and ϕ_4 be the phase shifts which must be inserted in the paths to elements 1, 2, 3, and 4 respectively to produce a beam at - 10° (assuming that otherwise line lengths are such that they would all radiate in the same phase). Then phases ϕ_4, ϕ_3, ϕ_2 and ϕ_1 fed to elements 1, 2, 3, and 4 respectively will produce a beam at + 10°. If phases ϕ_1, ϕ_2, ϕ_3, and ϕ_4 are next fed to elements 2, 3, 4 and 5 a beam that is - 10° from the radial line between elements 3 and 4 is produced, i.e. a beam which is + 30° from the previous reference, the radial line between 2 and 3. If the reversed phases, ϕ_4, ϕ_3, ϕ_2 and ϕ_1, are now fed to elements 2, 3, 4 and 5, a beam at + 50° to the previous reference will be produced. That is, by reversing the phases, and switching

around by one element at each second reversal, the beam can be stepped around the satellite in jumps of 20°. The phases of the elements for different beam positions are given in Table 6.2, where successive lines give the phases of the four elements required to produce the different successive beams. Here the phases ϕ_1 to ϕ_4 are $-\frac{2\pi r}{\lambda}(0.584)$, $-\frac{2\pi r}{\lambda}(0.060)$, $+\frac{2\pi r}{\lambda}(0.060)$, and $-\frac{2\pi r}{\lambda}(0.282)$, respectively. Here, r = 43 inches and λ = 40 inches. (See Figure 6.14).

Table 6.2 Phases of Elements for 18 Beams

Beam Position \ Element Number	1	2	3	4	5	6	7	8	9
1	ϕ_1	ϕ_2	ϕ_3	ϕ_4	-	-	-	-	-
2	ϕ_4	ϕ_3	ϕ_2	ϕ_1	-	-	-	-	-
3	-	ϕ_1	ϕ_2	ϕ_3	ϕ_4	-	-	-	-
4	-	ϕ_4	ϕ_3	ϕ_3	ϕ_1	-	-	-	-
5	-	-	ϕ_1	ϕ_2	ϕ_3	ϕ_4	-	-	-
6	-	-	ϕ_4	ϕ_3	ϕ_2	ϕ_1	-	-	-
7	-	-	-	ϕ_1	ϕ_2	ϕ_3	ϕ_4	-	-
8	-	-	-	ϕ_4	ϕ_3	ϕ_2	ϕ_1	-	-
9	-	-	-	-	ϕ_1	ϕ_2	ϕ_3	ϕ_4	-
10	-	-	-	-	ϕ_4	ϕ_3	ϕ_2	ϕ_1	-
11	-	-	-	-	-	ϕ_1	ϕ_2	ϕ_3	ϕ_4
12	-	-	-	-	-	ϕ_4	ϕ_3	ϕ_2	ϕ_1
13	ϕ_4	-	-	-	-	-	ϕ_1	ϕ_2	ϕ_3
14	ϕ_1	-	-	-	-	-	ϕ_4	ϕ_3	ϕ_2
15	ϕ_3	ϕ_4	-	-	-	-	-	ϕ_1	ϕ_2
16	ϕ_2	ϕ_1	-	-	-	-	-	ϕ_4	ϕ_3
17	ϕ_2	ϕ_3	ϕ_4	-	-	-	-	-	ϕ_1
18	ϕ_3	ϕ_2	ϕ_1	-	-	-	-	-	ϕ_4
19	ϕ_1	ϕ_2	ϕ_3	ϕ_4	-	-	-	-	-

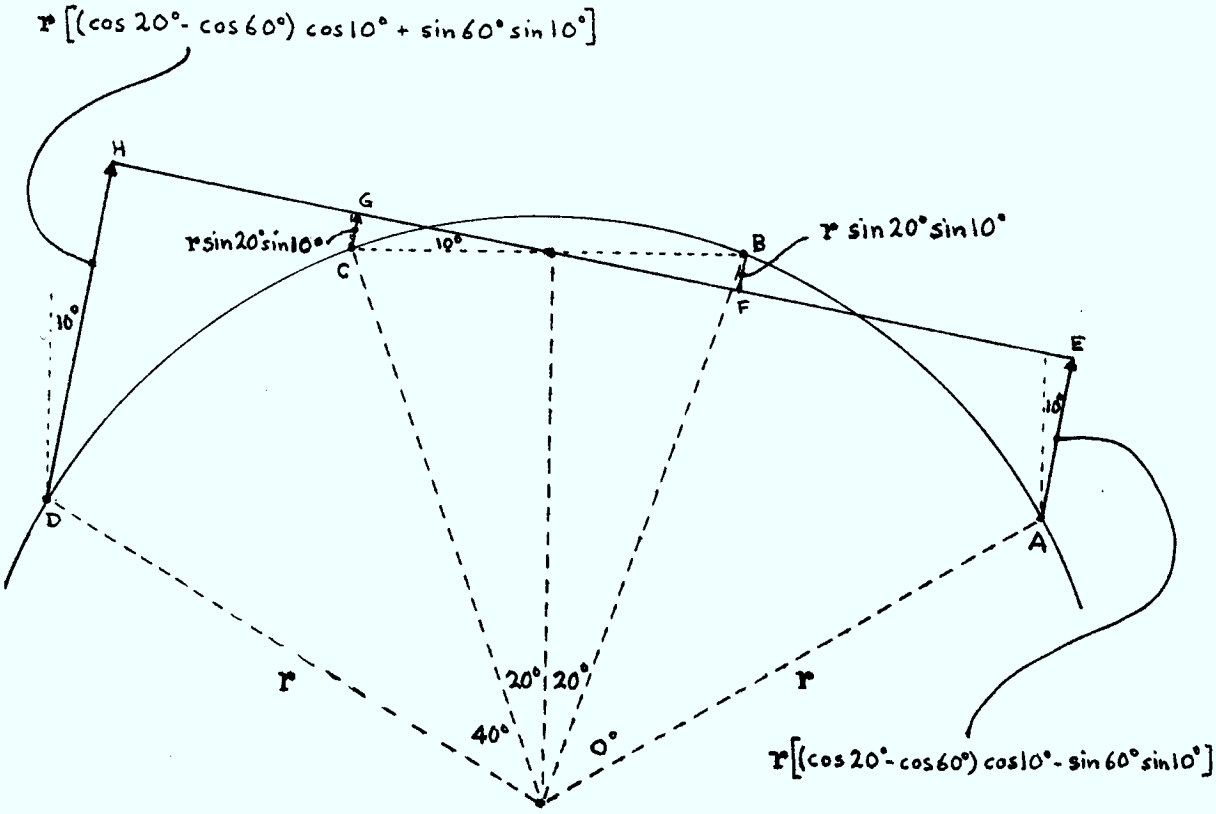

$$\phi_1 = -\frac{2\pi}{\lambda} AE \qquad \phi_2 = -\frac{2\pi}{\lambda} BF = \frac{2\pi}{\lambda} FB$$

$$\phi_3 = -\frac{2\pi}{\lambda} CG \qquad \phi_3 = -\frac{2\pi}{\lambda} DH$$

Figure 6.14 – Phase shifts required to tilt beam 10°

To produce three beams from each set of four elements, or a total of 27 beams, we must use three sets of phases for each four elements, These are ϕ_5, ϕ_6, ϕ_7, and ϕ_8 to produce a beam at $-13\frac{1}{3}°$; ϕ_9, ϕ_{10}, ϕ_{11}, and ϕ_{12} to produce a beam at $0°$; and ϕ_8, ϕ_7, ϕ_6, and ϕ_5 to produce a beam at $+13\frac{1}{3}°$. Here:

$$\phi_5 = -\frac{2\pi r}{\lambda}(0.628) \quad , \quad \phi_6 = -\frac{2\pi r}{\lambda}(0.079), \quad \phi_7 = +\frac{2\pi r}{\lambda}(0.079),$$

$$\phi_8 = -\frac{2\pi r}{\lambda}(0.228) \quad , \quad \phi_9 = -\frac{2\pi r}{\lambda}(0.440), \quad \phi_{10} = 0$$

$$\phi_{11} = 0 \quad , \quad \phi_{12} = -\frac{2\pi r}{\lambda}(0.440).$$

The switching to produce the phasings is simple in principle, four or eight properly phased sources each connected through diode switches to each of the radiating elements, with logic box controlling the switches according to signals from the earth sensors. (See Figure 6.15). In practice, because of the large number of diodes required to implement the switching and the large number of r.f. interconnections, the design will be very difficult, but still feasible.

6.3.5 Losses

An accurate estimate of the losses cannot be produced without a detailed design. Estimates can be made by taking LES-6 results and making allowances for the increased complexity of the present system. The calculated directivity of the LES6 antenna (dipole array) was 12.53 dB, and the measured directivity of the dipole array was 12.2 dB. The measured gain (i.e. directivity less losses) of the satellite was 9.8 - 10.2. That is, losses were approximately 2 dB. With the larger size and more complex system here a loss of 2.5 - 3 dB might be expected.

To this must be added the pattern loss (due to variation of gain

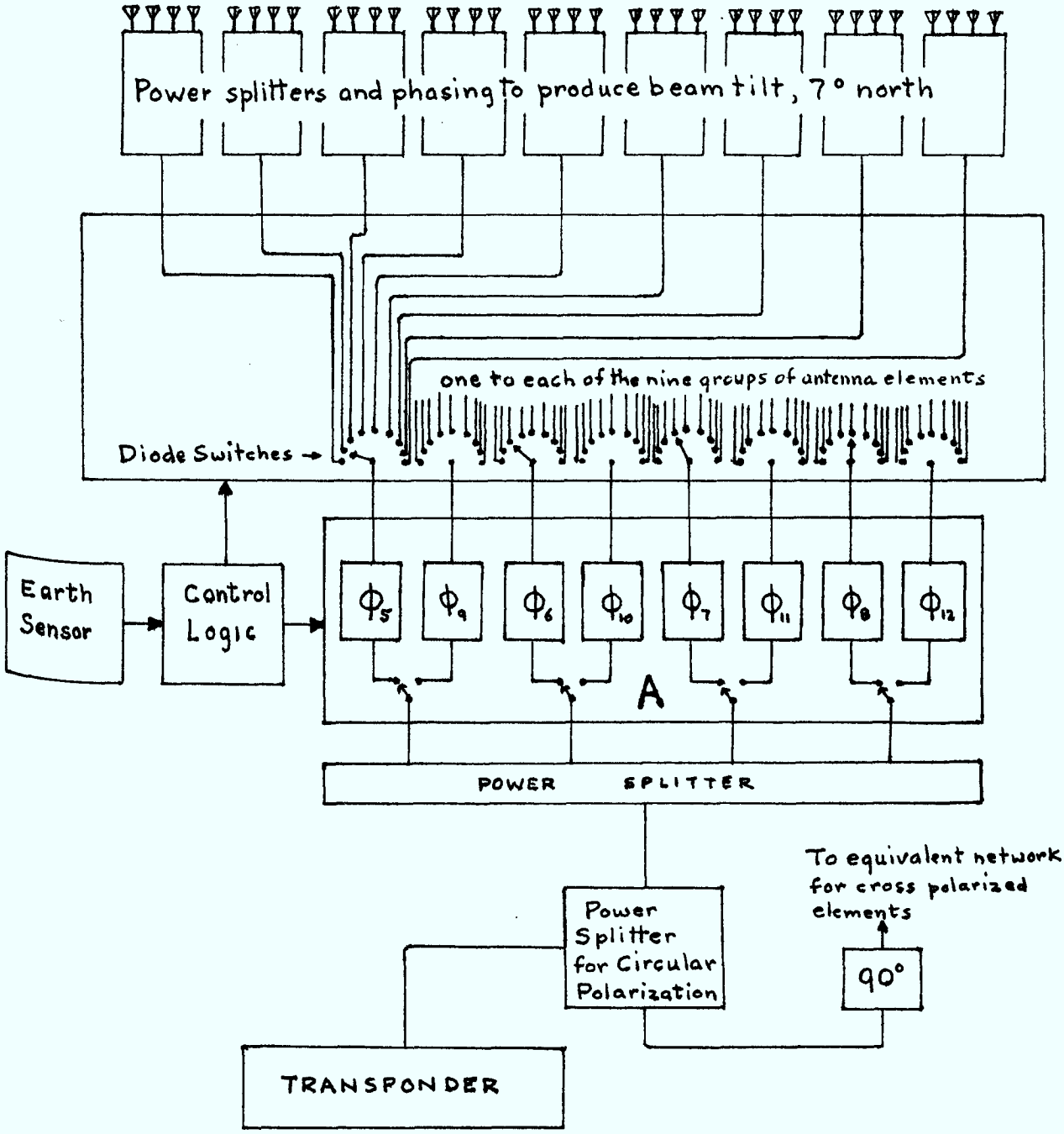

Figure 6.15 – Electronic despin electronics

(Note: If only 18 beam positions are to be used, only four phase shifters, ϕ_5, ϕ_6, ϕ_7, and ϕ_8, and no switches are required in Box A)

toward the earth during rotation discussed in the previous section, which is 0.8 dB for an 18 beam system or 0.3 dB for a 27 beam system. Actually, the half dB improvement, due to the use of 27 beams, would probably be lost in additional attenuation due to the extra complexity of the system, so the 18 beam system is to be preferred. A total loss of 3.3 dB (actual losses plus pattern losses) is probably a reasonable estimate for the 18 beam system.

Combined with the directive gain (directivity) estimates made previously this gives a net estimated effective gain of 13.9 ± 1 dB for the electronically despun antenna.

6.3.6 Weight

There are similar difficulties in estimating weight accurately without a detailed design. The following approximate estimates are based on estimated numbers of various components and estimated unit weights.

36 dipoles	5 lbs
36 cavity backed slots	9 lbs
64 hybrids and loads (power division)	16 lbs
8 switching networks	16 lbs
1 logic box	2 lbs
36 slot matching devices	5 lbs
Cabling	2 lbs
	55 lbs

Use of a naturally circularly polarized radiator, such as a helix, rather than a compound radiator such as a slot-dipole combination, would reduce much of the feed system by half, and give a weight possibly as low as 34 lbs. However, the solar array shadowing problem from such elements

is considered too difficult.

6.4 Antennas for a Three Axis Stabilized Spacecraft

Two major possibilities occur for the three axis stabilized spacecraft. We can consider either a two band deployable antenna similar to that described in Section 6.2 for the spin stabilized satellite, or a quad helix array, similar to that described in Reference A, for the 300 MHz band with either a dish or a high band helix array for 2.5 GHz.

The deployable antenna as it would be applied to the three axis stabilized design is shown in Figure 6.16. Some elements of weight will be reduced in this application, and the estimated weight is 30 lbs.

The quad helix array for 300 MHz has been discussed in detail in Reference A. Its characteristics are given in Table 6.3.

Table 6.3 300 MHz Quad Helix Array

Characteristic	Value
Length of Helices	95 inches
Helix diameter	12 inches
Element spacing (on side of square)	74 inches
Peak gain	19.75 dB
Edge of cover (8°) gain	18.7 dB
Ellipticity	< 2 dB
Weight	33 lbs

There is adequate space in the centre of the array for a 45" × 90" parabola, as would be required to provide the same 2.5 GHz traffic planned for the spin stabilized system. The additional weight of such

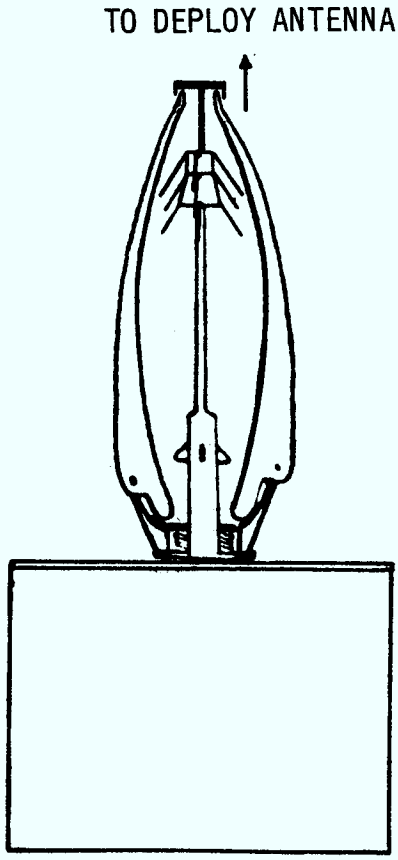

Figure 6.16 – Deployable two-band antenna used on a 3-axis stabilized spacecraft (Launch Configuration)

an antenna is estimated at 8 lbs making a total of 41 lbs.

An alternative to the parabola would be a 2.5 GHz quad helix array providing the same gain. This could be done with 22 dB elements (about 150 inches in length with centres on 13 inch spacing). However, in view of the length of the elements the weight with the deployment mechanism would probably be as great as that of the 45" × 90" dish, so it is not an attractive alternative.

In a CTS type configuration the face of the spacecraft which is on the top prior to launch (i.e. in the fairing) becomes the face which is oriented toward the earth. Thus, the antennas are mounted on this face. To keep within the 86 inch fairing diameter in the case of the quad helix array, the helix supports would have to be folded toward the centre, so that a two stage deployment is required. The 2.5 GHz aperture would be reduced to 45" × 86" to allow a non-deployable dish to fit into the fairing, in the space between the helices. The loss of gain is not appreciable. In the case of the deployable parobolic dish, the centre of the dish would be mounted directly to a fitting on the top face of the spacecraft with the feed support column and axis of the parabola mounted permanently at right angles to this face (i.e. along the axis of symmetry of the fairing). The ends of the ribs would be held by an attachment ring the release of which would be activated mechanically through the feed support column. A deployable design using folded ribs has also been made. This would allow securing directly to the deck.

In the RCA/ITOS configuration, the face which becomes the earth oriented face is one of the vertical faces when mounted in the fairing. The top face is available for mounting antennas which will point at right angles to the normal to this face, i.e. which will point in a direction

in the plane of this face. The mounting of the two band deployable parabola, then, can be exactly as described under the discussion of mechanically despun antennas for the spin stabilized spacecraft. The deplcyable quad helix could be mounted on the earth oriented face of the spacecraft or on a framework projecting from the top face by folding the helix supports inward prior to launch, thus again requiring a two stage deployment.

7.0 SPACECRAFT SUBSYSTEMS (NON-PAYLOAD)

- Conservative Performance Specifications
- Use of available technology
- Problem areas identified

7.0 SPACECRAFT SUBSYSTEMS (NON PAYLOAD)

7.1 Introduction

This section gives the performance level specifications of the "bus" subsystems of the various configurations. These data are drawn from the previous report (Reference A) and updated for those factors considered mission peculiar. In addition, where pertinent an explanatory paragraph has been added outlining design features, areas of difficulty etc.

7.2 Telemetry and Command

Table 7.1 Telemetry Specifications

R.F. Frequency	T.B.D
EIRP	0dBW
Modulation	PM
Encoding System	PCM
Tracking	By Residual Carrier
Antenna	Omni
Reliability	0.945 8 yrs.
Weight	13.9 lbs
Power	18 watts sunlight 10 watts eclipse

Table 7.2 Command Specifications

R.F. Frequency	T.B.D.
Receiver Noise Figure	< 10 dB
Modulation	PM
Encoding	PCM/FSK/AM
Antenna	Omni
Reliability	0.960 8 years
Weight	9.8 lbs
Power	3.6 watts

There is no major problem in this subsystem. There are three options in the choice of operating frequencies. If permanent assignments can be obtained in the Stadan bands, several potential advantages are available.

- Standard hardware
- World-wide tracking available
- Frequencies compatible with 2.5 GHz communications hardware but separable by simple filters.

If frequency assignments are not available, it would be proposed to redevelop standard units to operate in the upper communications band. This would introduce tracking problems. Operation at lower bands is also possible but offers additional difficulties including those of tracking.

If required, the telemetry frequency could be developed from a common source with the communications local oscillator and thus provide a reference frequency. Other options could include bringing telemetry down through the communications antenna when operations are normal. However such requires automatic change over or blind commands when antenna is not properly oriented.

A separate omni antenna probably on the despun section is preferred for spinning configurations while, for the 3 axis configuration a cardioid pattern antenna mounted on a short mast on the earth facing side is a plausible means of achieving the required coverage for orbit injection and on station operation.

7.3 Attitude Control (3 Axis Configuration)

Table 7.3 Attitude Control - 3 Axis

Beam Pointing Error	± 0.5° Pitch ± 0.5° Roll ± 7° Yaw
Attitude Sensing	Static Earth Sensor - Pitch and Roll Sun Sensor - Yaw
Reliability	.900
Weight	56 lbs
Power	30 watts sunlight 30 watts eclipse

This subsystem is essentially the double gimballed reaction wheel system proposed in Reference A as being suitable for a long life mission in which there is no stringent pointing requirement.

7.4 Attitude Determination and Despin (Dual Spin Only)

Table 7.4 AD&D Specifications

Beam Pointing	± 0.5°N-S (3σ) ± 0.5°E-W (3σ)
Spin Rate	75 - 100 rpm
Acquisition Time	< 15 minutes
Sensing	Earth & Sun Sensors
Reliability	0.920
Weight	40 lbs
Power	13.8 watts

The techniques of this subsystem are straight forward. Prime development effort would be in relation to the bearings and motor suitable to take the antenna loads. It is considered that the erectable

antenna shows some advantage in that the C.G. of the despun hardware is moderately low and some of the forces can be taken through suitable mechanical restraints.

The rotary joint is a design problem, at least at the lower frequency. If a suitable coaxial design cannot be achieved (possibly due to choke dimensions) a rotary transformer approach appears feasible.

7.5 Power

No particular difficulties have been identified in the three possible configurations discussed. The general advantages of each, as well as their limitations as discussed elsewhere are summarized here.

7.5.1 Dual Spin

Table 7.5 Power Specifications - Dual Spin

Solar Cell Array	
Type	Body Mounted
Power E.O.L.	360 watts
Weight	110 lbs
Battery	
Number of batteries	2
Cycles	90/year
Max. Depth of Discharge	60%
Weight	68 lbs
Power Control	
Weight	30 lbs
Power	21 watts Sun 8 watts eclipse
Reliability	0.950

There are relatively few apparent problems associated with this body mounted array or the other power units. The design uses most but not all of the fairing straight section (in an effort to keep the spacecraft CG low). Thus the design can be readily adapted to increase power by about 25 watts. Additional power could be obtained by allowing the array to extend below the separation plane provided no interference developes with the marmon clamp or with apogee motor arming.

This type of array of course suffers by the fact that only $1/\pi$ of the total cells are illuminated at a given instant. The power relative to an oriented array is not down by the same ratio because of the rotisserie effect wherein the cells of the spinner are operating at a lower mean temperature and thus more efficiently. The simplest body mounted array (without panels etc) ultimately simply runs out of fairing space and this is nominally the limiting factor rather than the cost of the "extra" cells.

Power conditioning for either spin or 3 axis configurations will probably favour constant power a switching type regulators rather than short series dissipative techniques. This is closely related to the nature of the variable load with lifetime and operating characteristics, and the resulting thermal problems.

7.5.2 Deployable Rigid Panels

Table 7.6 Power Specification

Solar Cell Array

Type	Rigid Deployment Panels
Power E.O.L.	500 watts
Weight - Deployment Mech.	18 lbs
- Panels & cells	55 lbs
Batteries & PCU as per Dual Spin	

This type of array seems most suitable for moderate power demands in three axis stabilized configurations (and some spin stabilized missions).

The power limit of this type of configuration is arbitrary in that large areas can be achieved but generally at the cost of increased mechanical complexity and thus with some reduction of reliability.

In missions in which there is a requirement for high eclipse power (full or high communications capability), it is difficult to provide adequate battery capacity to match the array capacity.

There is a potential center of pressure vs problem, particularly in configurations as shown here, although this can be designed to be balanced on the average by the antenna surfaces. This balance cannot be constant in time because of the earth pointing of the antennas vs the sun pointing of the solar array.

7.5.3 Flexible Solar Sails

Table 7.7 Power Specification

Solar Cell Array

Type	Flexible - extensible array
Power E.O.L.	~ 1 k Watt
Weight - Deployment*	70 lbs
- Sails	40 lbs

* includes transfer orbit array

Batteries & P.C.U. as per Dual Spin

This type of array is most suitable for high power applications. Once the initial weight penalty is accepted, the weight to power coefficient for additional power is very favourable.

It may be noted that the deployment mechanism weight includes that of a low power solar array for transfer orbit use. This weight and the array covers are disposed of at the time of deployment and a small advantage is gained since there is a corresponding secondary propulsion fuel saving from the reduced spacecraft mass on Station.

Except in large mass spacecraft, it is virtually impossible to provide batteries adequate for full eclipse power.

7.6 Electrical Distribution

This is not a true subsystem - but rather a collection of units generally associated with power distribution and control. For different manufacturers and configurations the exact units involved vary considerably. Typically, units which may be found in the subsystem are the harness(es), power switching, system power conditioning, and often the command decoding. The subsystem is highly related to the overall spacecraft integration task and includes areas such as grounding techniques and electrical interference control.

No particular problems have been identified for this mission.

7.7 Positioning and Orientation

Table 7.8 P & O Specification - Spin Stabilized

Parameter	Value
Fuel	Monopropellant Hydrazine
No. of Tanks	4
Thrust Level	5 lbs
Axial Thruster	Pulsed - Attitude Control Continuous - N.S. Inclination correction
Radical Thruster	Pulsed - E.W Station Keeping
Dry Weight	24 lbs
Fuel Weight	150 lbs
Reliability	.970
Power	.5 watts sunlight .5 watts eclipse

Table 7.9 P & O Specification - 3 Axis Stabilized

Fuel	Monopropellant Hydrazine
No. of Tanks	3
Thrust Level	Axial 5 lbs Radial 5 lbs Roll .1 lbs Pitch .1 lbs Yaw .1 lbs
Dry Weight	36.7 lbs
Fuel Weight	150 lbs
Reliability	.960
Power	.9 watts sunlight .9 watts eclipse

In general this subsystem should be made up of flight proven components in order to achieve high reliability. Electrical thrusters are not considered as adequately proven at this time - at least for extended lifetime missions.

This mission requires large tankage including reserve capacity to permit fueling up to zero contingency at time of launch. It may be noted that the three sigma booster dispersion components of the fuel load typically can provide up to 18 months of station keeping if the launch is perfect. Thus a flexible and adaptive mission plan for the system is highly desirable.

It may be noted that the three axis system is basically heavier because of the extra thrusters and the need to provide positive fuel separation from the pressurant or incorporation of surface tension tanks.

No major problems are anticipated in the subsystem.

7.8 Thermal

This is a recognized problem area. The budgetary allocations are based on passive control plus the use of switchable solar array shunts. If full active control (shutters etc) should be required, additional weight allocation will be required.

The problems are associated with the varying heat source locations which result from the varying transponder configurations at constant power, the full use of spacecraft power resources over the lifetime as the solar cells degrade i.e. varying total power load.

It is anticipated that the thermal effects of switching of communications configurations can be alleviated by carefully layout

of units including such techniques as complementary units sharing heat sinks, balancing of efficiencies etc. Similarly units most likely to be employed in early life (high power utilization) but not later would have to be examined carefully. It is clear that the spacecraft will show a wider range of temperature than usual and thus designs will have to be carefully examined for thermal sensitivity.

The thermal problems are of a similar nature but may be more severe in the three axis configurations because of the more compact size and the diurnal rotisserie effect. In either configuration it is likely that heat pipe and/or active thermal control techniques will be required.

7.9 Structure

There are no apparent major design problems. Other than the usual requirement for minimum weight, attention will have to be given to stiffness because of stability of the launch vehicle/spacecraft combination. It is anticipated that a midships deck carrying most of the mass well outboard will be required in order to achieve stability of the spinning configuration. The thrust tube will have to be of large diameter because of the large apogee kick motor and a high center of gravity. The 3 axis design shows some weight advantage because of the more compact size and efficient structural design relative to the spinner with its large drum and heavy equipment platform and support.

7.10 Apogee Motor

There are no apparent problems in this subsystem. It is assumed that an extended case on the Thiokol TE364-4 motor would be appropriate. It may be that at the time of implementation an AK Motor matched to

the 1890 lbs Thor Delta will be available.

7.11 General

Consideration will have to be given to the spin problem in the dual spin configuration. The large diameter of the spacecraft will produce high "g" forces at normal spin rates. High spin rates are desirable to produce stiffness in spacecraft attitude. It may be necessary to add rockets to the spin table or alternatively to position thrusters so as to permit spacecraft spin up after separation. It may be noted that the sensor information for attitude determination is sensitive to spin rate, becoming more accurate as the rate increases.

It also may be noted that the 3 axis configurations also have a spinning phase associated with 3rd stage and AKM firings.

8.0 IMPLEMENTATION ALTERNATIVES

- Traffic Exceeds Basic Model
- Dual-Spin Configuration
- 3 Axis Configuration based on CTS

8.0 IMPLEMENTATION ALTERNATIVES

This section provides the basic budgets as well as spacecraft summary specifications and sketches of general configuration for the two concepts which at this time are considered as most suitable for planning of this mission. As noted in Section 4, these budgets are not strictly comparable with those developed in that section as indicative of the trade-off regimes.

The configuration utilizing electrical despin of low band antennas and that based on the RCA/ITOS design are not considered adequately defined at this time for selection as recommended designs, although either or both must still be considered potential candidates for implementation in the time frame of interest. Accordingly these configurations and their respective gudgets are not developed for presentation here although they are available as preliminary data in section 4.

Figure 8.1 shows the dual-spin configuration concept, while Tables 8.1 and 8.2 give the spacecraft basic specification and weight budgets respectively.

Table 8.3 gives the traffic summary for various operational phases for both configurations.

Figure 8.2 shows the 3 axis configuration, Table 8.4 its specification and 8.5 the weight budgets.

RCA Research Laboratories

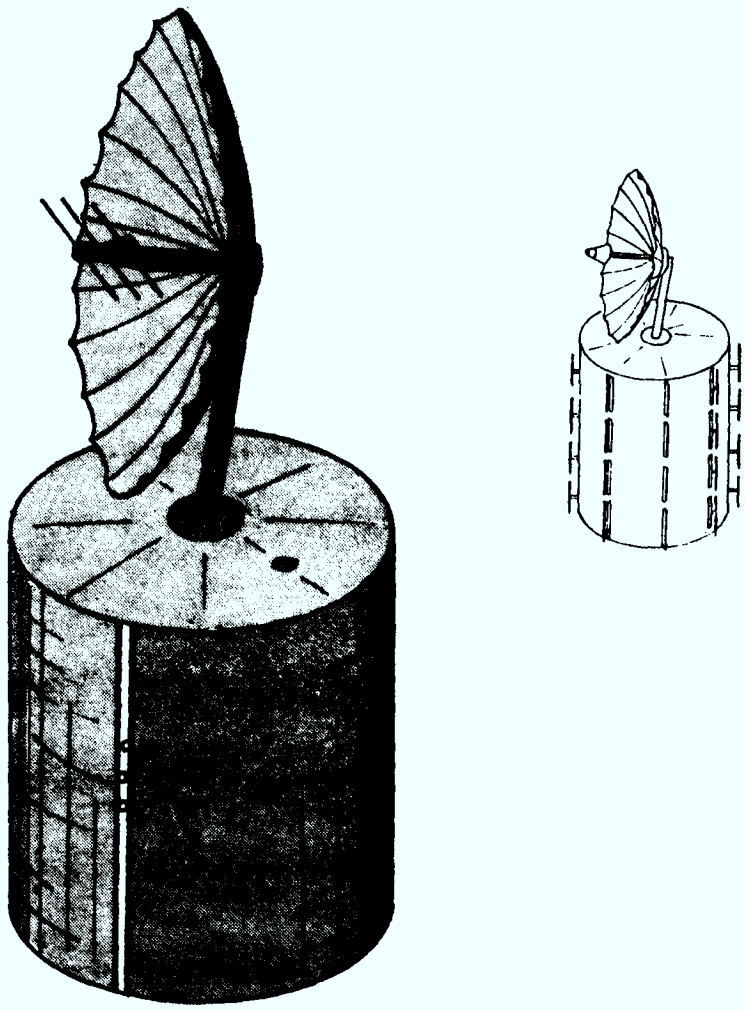

DUALBAND-DUAL SPIN SPACECRAFT

Figure 8.1

- Diameter: 86" • Height: 157.5" / 227.5"
- 1820 lbs. in transfer; Initial on orbit 963 lbs.; End of Life: 813 lbs.
- Dual Band Transponder
- Canadian Coverage
- Power: 360 Watts E.O.L. (S.S.); Eclipse: 243 Watts
- 8-Year Life

Table 8.1 – Spacecraft Characteristics – Spin Stabilized Configuration

Launch Capability 28.3° Inclination	1890 lbs.
Attach Fitting	70
Apogee Motor Fuel	857
Initial on-orbit fueled spacecraft	963
'Bus' Weight	796
Payload Available	167
Transponder	90
Antenna	42
Design Margin	35

Power E.O.L. – 360 Watts Eclipse 243 Watts

Table 8.2 – Dual Spin Spacecraft – 8 Year Life

			300 MHz		2.5 GHz	
			High Power	Low Power	Broadcast	Low Power
Single Satellite	Sun	BOL	3	30	3	90
		EOL, S.S.	1	30	3	90
		Min. Eclipse	–	–	2	45
Dual Satellite System		Sun	4	60	3	90
		Min. Eclipse	1	30	2	45

(a) 3-Axis

			300 MHz		2.5 GHz	
			High Power	Low Power	Broadcast	Low Power
Single Satellite	Sun	BOL	3	30	3	90
		EOL, S.S.	1	20	3	90
		Eclipse	1	10	2	46
Dual Satellite		Sun	3	50	3	90
		Eclipse	3	30	3	90

(b) Dual Spin

Table 8.3 – Traffic Capability Channels

RCA Research Laboratories

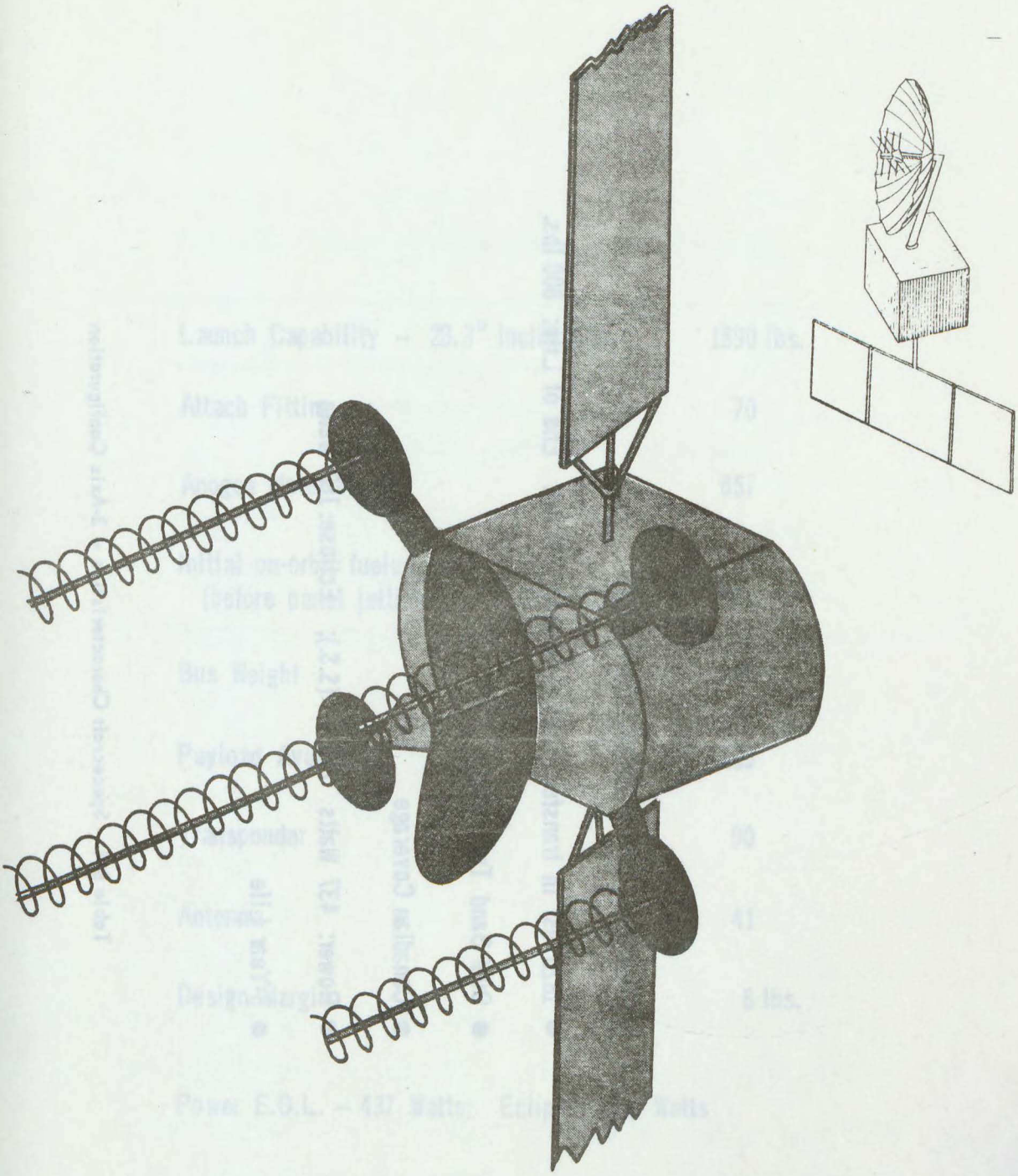

3 AXIS STABILIZED SPACECRAFT – CTS BASED

Figure 8.2

- Diameter: 71" • Height: 116"/116"
- 1820 lbs. in transfer; Initial on orbit 948 lbs. End of Life: 800 lbs.
- Dual Band Transponder
- Canadian Coverage
- Power: 437 Watts E.O.L. (S.S.); Eclipse: 160 Watts
- 8-Year Life

Table 8.4 – Spacecraft Characteristics – 3-Axis Configuration

Launch Capability – 28.3° Inclination	1890 lbs.
Attach Fitting	70
Apogee Motor Fuel	857
Initial on-orbit fueled spacecraft (before panel jettison)	963
Bus Weight	824
Payload Available	139
Transponder	90
Antenna	41
Design Margin	8 lbs.

Power E.O.L. – 437 Watts; Eclipse: 160 Watts

Table 8.5 – 3-Axis Spacecraft – 8-Year Life (CTS Based)

9.0 BUDGETARY - PROGRAM COST - SPACE SEGMENT

- Postulated contracting format
  - Performance specification
  - "Commercial" spacecraft procurement
- Flight 1 - 30 months ARO
- Comparisons to other costing data

9.0 BUDGETARY PROGRAM COST-SPACE SEGMENT

In developing the budgetary estimates for the space segment of this system, a large number of assumptions have had to be made and some ground rules developed, the most important of which are discussed below.

(a) The costs are based on available data adjusted for factors considered to be program peculiar.

(b) The figures quoted are budgetary cost estimates including estimated profits and incentives. The latter factors are sensitive to the form of contracts and the contracting pattern, with the division between profits and an orbit incentives to be negotiated. As a rough order of magnitude the total of these have been estimated at 10%.

(c) The estimates are based on a program which follows good commercial spacecraft practice procurements. In this regard it is assumed that the procurement is to a spacecraft performance specification and that prime contractor control is to that level. It is further assumed that no special financial or technical visibility or reporting is required.

(d) It is assumed that all the required technologies are available but that most subsystems require development to the extent that normal design reviews, breadboard and engineering models are required during the program. Thus, for example, the CTS technologies are considered as proven at the time of the program implementation but that no subsystem can be a direct reprocurement of an unmodified design. However, when appropriate the costs do reflect savings which result from off-the-shelf-units

or devices where such savings commonly occur.

(e) The program is costed on the basis of a 30 month first launch ARO, with the second at an interval such as to phase with good continuity into the integration and test facility. The basic program consists of the appropriate models: mechanical - thermal and engineering all within the nonrecurrent costs. For economy it has been assumed that the prototype may be refurbished and tested to flight levels at additional cost to act as launch back up. The reburbishing and retest cost estimate on the prototype is shown separately in as much as they are discretionary and likely to be implemented only on a launch or early failure.

(f) Cost estimates do not include duties, sales taxes or royalty payments. All figures are in Canadian dollars and do not permit unreasonable variations in exchange rates on units, subsystems or components likely to be of foreign origin. The estimates do not include launch costs or NASA Services or customer program offices etc. As guidance NASA charges are anticipated to anticipated to be of the order of $7.5 M per launch.

(g) While reasonable effort within the scope of this study has been made to develop accurate figures, the accuracy of the forecasts of costs, inflation and influence of other programs is such as to make these estimates liable to error. Within these constraints and limitations it is felt that the overall accuracy is about 10 to 20%. It is anticipated that the former is generally applicable to the total space segment costs, while the latter is more likely to apply to individual subsystem or

phase costs.

Table 9.1 gives the cost estimates for the dual spin dual frequency concept, and the delta cost indications for the 3 axis concept based on CTS.

No budgetary prices have been developed for the RCA/AED configuration of a 3 axis design. As indicated previously this concept is presently the subject of a competitive proposal and thus is considered proprietary. The preliminary costing information however does suggest that the budgetary estimates for a hybrid type configuration would be close to those of the dual spin configuration.

For comparison purposes these budgetary costs may be compared with data recently published by Comsat and reproduced here as Figure 9.1. It is not known in detail how these numbers are built up, e.g., how profits are incorporated, if at all; apogee motor costs etc. Their data are in general agreement with similar analyses by RCA Limited.

Although not a contractual requirement to do so, it has been suggested that for planning purposes it would be useful to develop total space segment costs. To do so accurately requires a decision as to system philosophy, acceptable user risks, philosophy as to additional launches i.e. insurance, options etc. and similar factors. Solely for information the following are given:

a) Minimum System

Basic committment	
2 Spacecraft (incl. development)	44.66 M
2 Launches and Services	15
	$59.66 M
Spare for early S/C or Launch Failure	
1 S/C refurbished	1. M
1 Launch	7.5 M
Total Cost	$68.16 M

	Non-Recurrent	Prototype	Unit Flight	Total	Notes
Systems & S.S. Eng.	1.2	0.5	0.25	2.45	
Communications	3.5	2.1	1.7	10.7	Dual-Band Multifunction
Antennas	1.2	0.2	0.15	1.85	
TT Command	0.5	0.4	0.3	1.8	
AD & Despun	1.85	1.0	0.8	5.25	Includes Rotary Coupler
Power	1.0	0.9	0.75	4.15	
Elect. Dist.	0.3	0.15	0.1	0.75	
Position and Orientation	1.5	0.35	0.3	2.75	
Thermal	0.75	0.2	0.15	1.4	
Apogee Motor	0.65	0.2	0.15	1.3	
Structure	1.0	0.3	0.3	2.2	
Integration and Test	0.4	1.5	1.0	4.9	
Ground Support	2.75	–	–	2.75	
Management	2.5	0.5	0.5	4.5	
Range Ops	–	–	0.15	0.45	
Subtotal	19.1	8.3			
TOTAL	27.4		6.60	47.2	
Profits & Incentives				4.72	
TOTAL				51.92	Dual Spin Configuration
By Comsat & Curves (See Figure 9.1)	27.5		6.71		
Δ Costs – CTS Type 3 Axis	3.2		0.6	5.0	Increase Over Dual Spin
Option – Refurbish Prototype				1.00	

Table 9.1 – Budgetary Costs Space Segment – 3 Flight S/C – First Launch 30 Months ARO ($ Million)

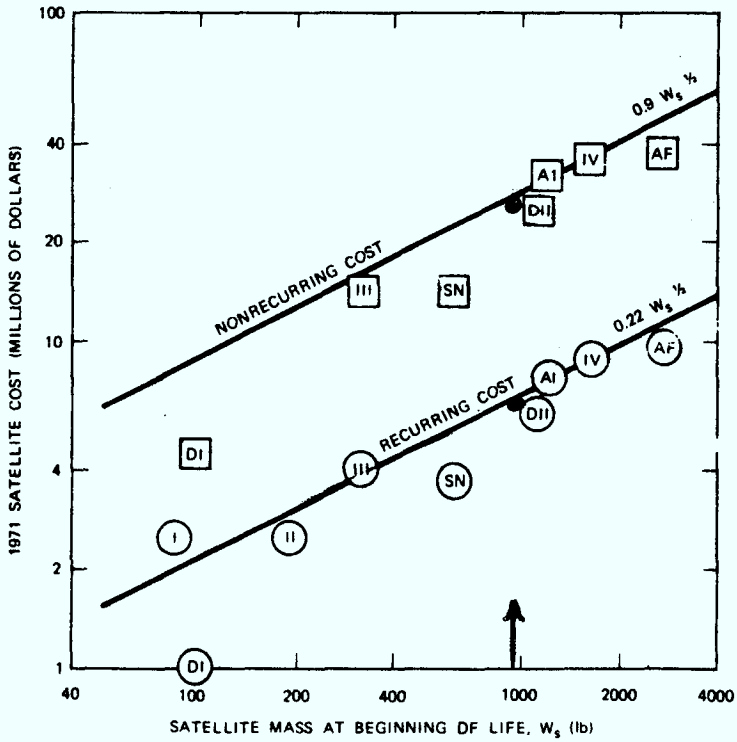

SYMBOL		NO. OF FLIGHT MODELS
I	INTELSAT I	1
II	INTELSAT II	5
III	INTELSAT III	8
IV	INTELSAT IV	8
A1	ATS 1 THROUGH 5	5
AF	ATS F AND G	2
DI	DSCS-I (IDCSP)	32
DII	DSCS-II	6
SN	SKYNET AND NATO	4

Figure 9.1. Satellite Cost vs. Satellite Mass

From Comsat Technical Review
Volume 2, Number 1 Spring 1972

b) Protected System - 10 years

Basic Committment		
3 S/C including development	51.92	M
3 Launches	22.5	
	$84.42	M
Spare for early S/C or Launch Failure		
Refurbishing	1.0	
Launch	7.5	
	8.5	M
Total Cost	$92.92	M

Although under best circumstances the space segment can be established for $60 M, for program planning purposes (cost effectiveness etc.) a minimum cost of 68 M is more appropriate. In a growth situation the more conservative system would be appropriate with costs ranging from $85-93 M. However, it may be noted that in the latter situation of a full system, there could be significant carry over of hardware (traffic) capability beyond the ten year system life.

10.0 CONCLUSIONS AND RECOMMENDATIONS

- Dual Band Concept Feasible
- Advantages from low band operations
- Implementation alternatives

10.0 CONCLUSIONS AND RECOMMENDATIONS

On the basis of this study and data from its earlier counterpart, it is concluded that the space communications technology of the 1977 time frame will be adequate to support this mission concept and the forecast traffic.

It is further concluded that the specific concept of a communications subsystem operating in two widely separated frequency bands is feasible and eithin the technology.

It is suggested that the lower band communications system operating with small diameter ground stations offers interesting operational techniques which enhance the cost effectiveness of the system in terms of total traffic capability. This advantage is predicated on the operational use of the spacecraft nominally designated as spare.

It is concluded that several differing configurations of spacecraft can be developed to fulfill this mission requirement. It is suggested that the final choice as to configuration should be made after the availability of a specific launch vehicle capability has been determined.

Several areas merit further study in order to better define the spacecraft requirements and subsequently to chose the most suitable spacecraft configuration, spin or body stabilized.

- Detailed study of the system operation and spacecraft hardware implications of the 2 satellite, active space, system concept. In particular the trade-off between NS station keeping and eclipse operation, and the impact on the communications transponder and antenna system.

- Investigation of the high efficiency, low intermodulations solid state amplifier.
- Further definition of thermal design problems and conceptual solutions particularly for the body stabilized design.
- Feasibility study of a suitable rotary joint/transformer for the dual spin configuration.
- More detailed investigation of feasible 2 Band antenna and feed arrangements particularly for the body stabilized spacecraft.

APPENDIX A

PRELIMINARY INVESTIGATION OF CONDITIONS FOR LOW INTERMODULATION DISTORTION IN A MICROWAVE POWER TRANSISTOR.

ABSTRACT

It is demonstrated that the in-house computer program MING, in conjunction with a nonlinear regression analysis program, provides a powerful means for predicting the intermodulation distortion (IMD) due to a microwave power transistor, not only under gain-optimized conditions but also under special conditions leading to IMD-minimization. Multicarrier operation up to 12 carriers is studied.

Note: This is a reproduction of RCA Limited Engineering Memorandum MNLD-72-EM-005, August, 1972, authors: Dr.R.G. Harrison and Dr. H.J. Moody.

TABLE OF CONTENTS

FIGURES

TABLES

1. INTRODUCTION

The demonstrated ability of the in-house computer program MING to predict the intermodulation distortion (IMD) levels due to a gain-optimized class A microwave power transistor amplifier with two carriers prompted a test of its effectiveness under experimental conditions which lead to IMD-minimization. The results reported here indicate that MING provides good accuracy in this case also. Because of the relevance of these findings to current communications-satellite projects, it is recommended that further studies be implemented to investigate the use of the program in the optimization of transistor operating conditions in a multi-carrier environment. Some preliminary multi-carrier computations are included.

2. EXPERIMENTAL

2.1 Circuit

The experimental circuit is shown in Figure 2.1. Carriers of frequencies f_1 and f_2, generated by two separate oscillators, are combined using a -10 dB coupler. The 10 dB loss in the coupler side-arm is compensated by a travelling-wave tube amplifier (TWTA). An adjustable attenuator sets the level of the composite input signal before it enters the coaxial amplifier containing the device under test: in this case a common-base RCA 2N5470 microwave power transistor. Both input and output ports are provided with double-dielectric-slug tuners and adjustable dc bias supplies. The device is protected from excessive dc collector currents by means of a crowbar circuit in series with the collector bias supply V_{cc}. The total output power is monitored by a wideband power meter, the average dc current in the output circuit by a clip-on type milliammeter and the levels of the IMD products by a spectrum analyzer.

2.2 Procedure

Having set the two oscillators to the desired frequencies f_1 and f_2, the gain of the TWTA is adjusted so that the level of each carrier in the combined input signal to the amplifier under test is the same. Then the absolute level of the combined signal can be controlled by the adjustable attenuator. The power incident on the amplifier input is initially determined by replacing the amplifier by the 50 ohm thermistor head of a power meter.

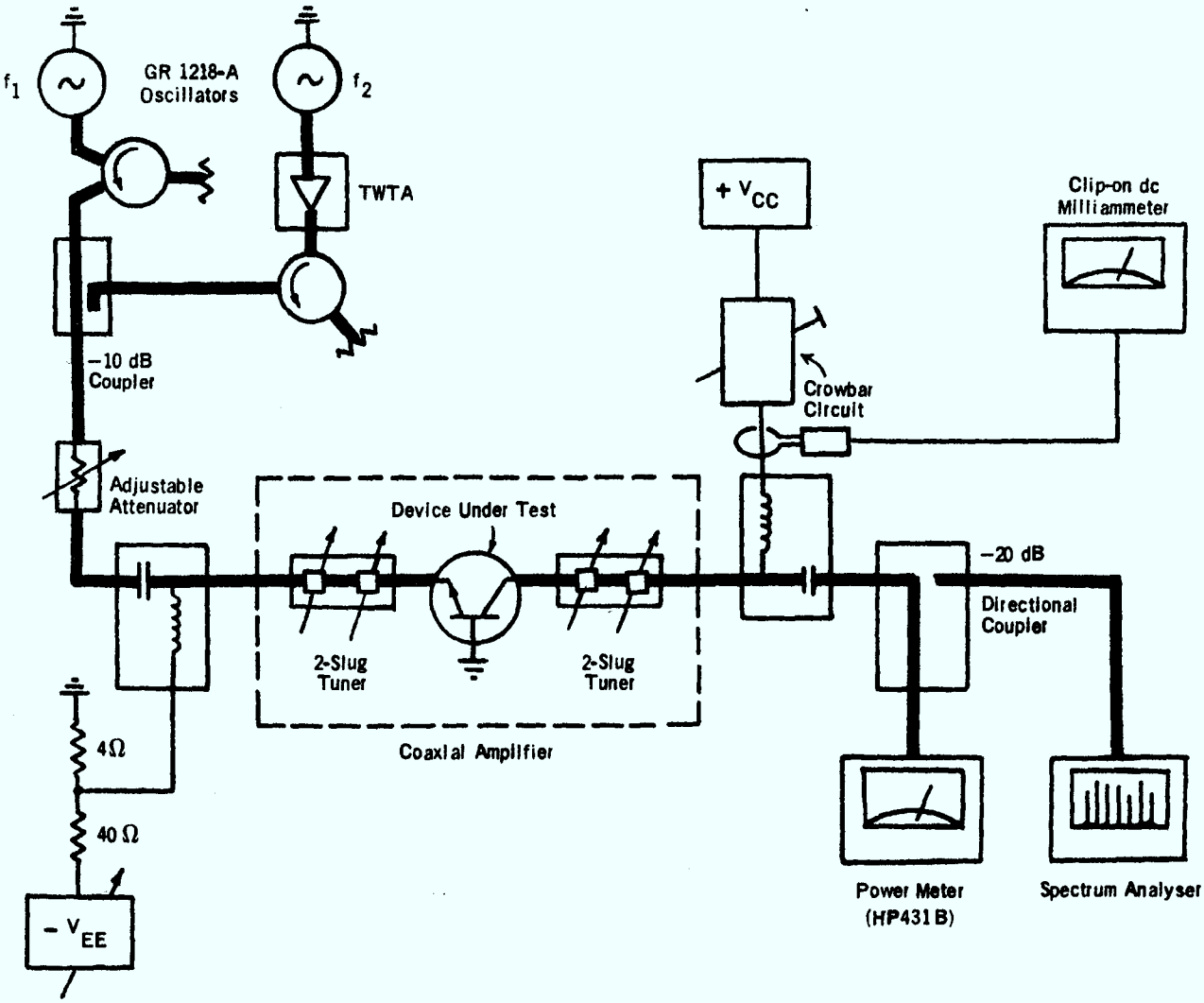

Figure 2.1 – Experimental circuit used for investigation of the low-IMD condition

Finding the conditions which lead to low IMD is not a simple task, and seems to depend, to some extent, upon getting a "feel" for the combined effect of varying the input-port bias V_{EE} and the positions of the four dielectric tuning slugs. The objective is to minimize simultaneously the third-order IMD products $2f_1 - f_2$ and $2f_2 - f_1$ while retaining acceptable values of gain ($\geq$4 dB) and efficiency ($\geq$ 25%). Finding such a constrained minimum of 5 variables manually is difficult; it is conjectured that a better minimum might be found were the experiment computerized. This would involve servo-controlled tuners and a programmable bias supply, as well as analog-to-digital and digital-to-analog converters and an on-line (possibly timeshared) computer.

Minimization of the levels of the IMD products is typically done at a power level near the centre of the desired dynamic range. When a satisfactory minimum has been achieved, the active device is characterized in terms of its nonlinear gain and phase characteristics. To do this, one of the input carriers is removed and the output power and the relative output phase-angle are measured as functions of the input power using a Hewlett-Packard network analyzer as shown in Figure 2.2. This characterization is done over as wide a range of power-levels as possible. The resulting $P_{out}(P_{in})$ and $\phi_{out}(P_{in})$ transfer characteristics constitute a methematical representation of the rf behaviour of the active device together with its package and parasitics and its immediate network environment (tuning elements, etc.). This representation can be used to make predictions of the IMD products and effective gain under multi-carrier

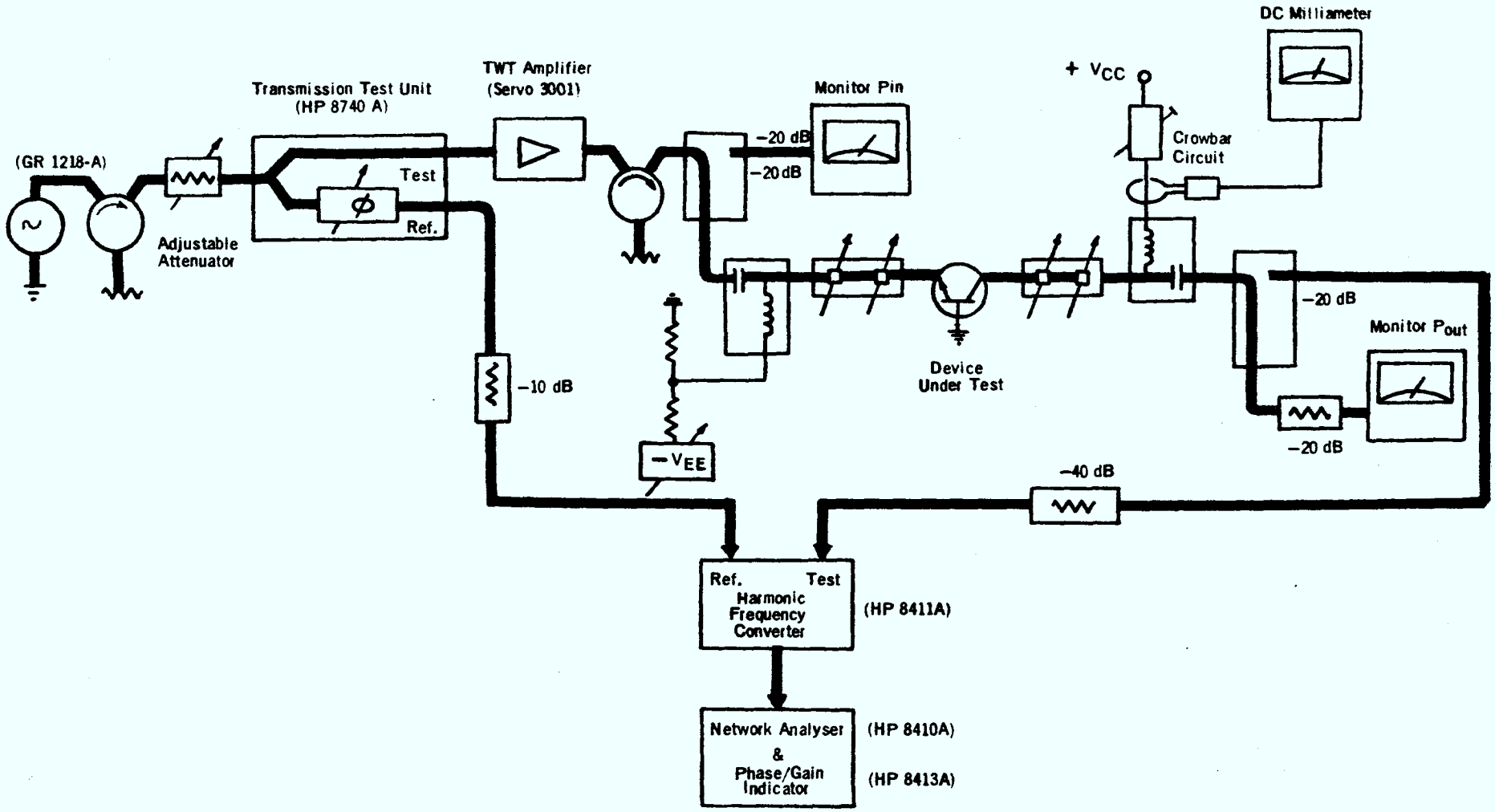

Figure 2.2 – Set-up for measuring gain and phase nonlinearities

conditions. It cannot, however, be used to predict efficiency. In that case a more conventional physical model of the active device would be required. The other shortcoming of the gain and phase characterization is that it is specific to a particular tuning and bias condition (but not to a particular power level). Its overwhelming advantage is that it is at present the only mathematically satisfactory representation for calculations of the multi-carrier behaviour.

3. COMPUTATIONAL

The instantaneous input signal, whether it is a single or a multi-carrier signal, is represented as

$$v_{in}(t) = \rho(t)\cos\left\{\omega_o t + \mu(t)\right\} \tag{1}$$

where $\rho(t)$ is the instantaneous amplitude

$\mu(t)$ is the instantaneous phase

ω_o is a reference frequency (e.g. at midband).

If the output signal can be written

$$v_{out}(t) = g(\rho)\cos\left\{\omega_o t + \mu(t) + f(\rho)\right\}, \tag{2}$$

where $g(\rho)$ is due to the amplitude nonlinearity and $f(\rho)$ is caused by the phase nonlinearity due to AM-to-PM conversion then it can be shown[1] that the magnitude of the IMD product whose angular frequency is

$$\omega_o + k_1\omega_1 + k_2\omega_2 + \ldots + k_n\omega_n \tag{3}$$

(where the k_i take ± integral or zero values and are constrained by $k_1 + k_2 + \ldots + k_n = 1$) is given by the absolute value of the complex quantity

$$M(k_1, k_2, \ldots, k_n) = \int_0^\infty r \prod_{s=1}^{n} J_{ks}(V_s r)\left[\int_0^\infty \rho g(\rho) e^{jf(\rho)} J_1(r\rho)\,d\rho\right] dr \tag{4}$$

where V_i is the amplitude of the ith input carrier. The amplitude and phase nonlinearities due to the device are represented in this expression by the function

$$g(\rho)\exp[jf(\rho)] \quad . \tag{5}$$

This function can be approximated mathematically by a variety of different series, such as power, Fourier or Bessel series, in each case with complex coefficients. For computational efficiency a Bessel series approximation[2] is advantageous:

$$g(\rho)\exp[jf(\rho)] \cong \sum_{m=1}^{N} c_m J_1(m\alpha\rho) \tag{6}$$

where the scaling factor α and the complex coefficients c_i are adjustable. In the particular case of a Bessel series (4) can be expressed in the simple form

$$M(k_1, k_2, \ldots, k_n) \cong \sum_{m=1}^{N} c_m \prod_{s=1}^{n} J_{ks}(V_s m\alpha) \quad . \tag{7}$$

The approximation (6) is used here for the transistor characteristics.

From Equations (1) and (2) it is evident that ρ is proportional to $\sqrt{P_{in}}$ and $g(\rho)$ is proportional to $\sqrt{P_{out}}$. The function $f(\rho)$ in (2) is just the output phase-angle (in radians). Since the present interest is in the relative rather than the absolute levels of the IMD products, it is convenient to normalize ρ, $g(\rho)$ and $f(\rho)$ such that $g(\rho) = 1$ at the saturation level and $f(\rho) = 0$ at the zero input-power level.

The double curve-fitting of the measured $P_{out}(P_{in})$ and $\phi_{out}(P_{in})$ characteristics to the Bessel series in (6) is accomplished by means of a modified version of the nonlinear-regression program NLRGRES[3]. First the in-phase (real) part of (5) is fitted, namely

$$g(\rho)\cos f(\rho) \quad , \tag{8}$$

then the quadrature (imaginary) part is fitted:

$$g(\rho)\sin f(\rho) \quad . \tag{9}$$

It is found in practice that the in-phase part usually fits much better than the quadrature part. In general the scaling factors α will be different in the two cases. To minimize the number of times the Bessel functions have to be computed, it is advantageous for both in-phase and quadrature components to have the same α. Thus, when a satisfactory quadrature fit has been achieved, the resulting value of α is prescribed as a fixed parameter for the in-phase curve-fitting operation.

In the present case both in-phase and quadrature components were fitted by a nine-term Bessel series, ($N = 9$ in Equation (6)).

When the double curve fitting has been accomplished, the in-house computer program MING* is used to compute the IMD levels for the desired number of carriers. MING accomodates carriers of arbitrary amplitude and spacing, the results reported here, however, are for equal amplitudes and constant spacing. Although the program contains numerous special features, the IMD products are effectively computed according to (7) where the c_m are the fitted complex coefficients of the Bessel series of (6).

---

* Originally written for the analysis of distortion in TWT amplifiers by J. Seddon, subsequently modified by H. Moody, both of RCA Limited.

4. RESULTS

The first case discussed below is the one which first indicated the validity of the method for a microwave power transistor. The other cases relate to the low-IMD condition.

4.1 Gain-Optimized Class A Amplifier

In the first experiment, the device was biased for class A operation and tuned for maximum single-carrier gain at the saturation level. No attempt was made to minimize the 2-carrier IMD products. The single-carrier operating conditions are summarized in table 4(1) and the measured nonlinear $P_{out}(P_{in})$ and $\phi_{out}(P_{in})$ characteristics are shown in Figure 4.1.

Next, two carriers were applied simultaneously to the amplifier at a total power level somewhat less than the saturation level, and the resulting amplifier performance measured. These results, together with the predictions of the MING program are compared in Table 4(2). The rather satisfactory agreement between the computed and measured levels of the third- and fifth-order IMD products (relative to the carrier levels) prompted a similar investigation for the special case in which the transistor amplifier is optimized for the low-IMD condition. This work is reported in the next section.

4.2 Amplifier Optimized for the Low-IMD Condition

In this experiment, the amplifier was carefully tuned and biased to yield the minimum IMD while retaining acceptable gain and efficiency. This process involves rather complex tradeoffs: it is generally found that the lower one sets the minimum-gain constraint, the lower the IMD

Table 4(1) - Single-carrier data for a gain-optimized class A amplifier at the saturation level.

Transistor:	2N5470
Mode:	Class A, common base
Frequency:	2.00 GHz, single carrier
Collector Bias:	30 mA, no RF applied
V_{cc}:	28 volts
At the gain optimum:	P_{in} = +26.6 dBm P_{out} = +31.5 dBm G = 4.9 dB η_c = 30%

(41652-79)

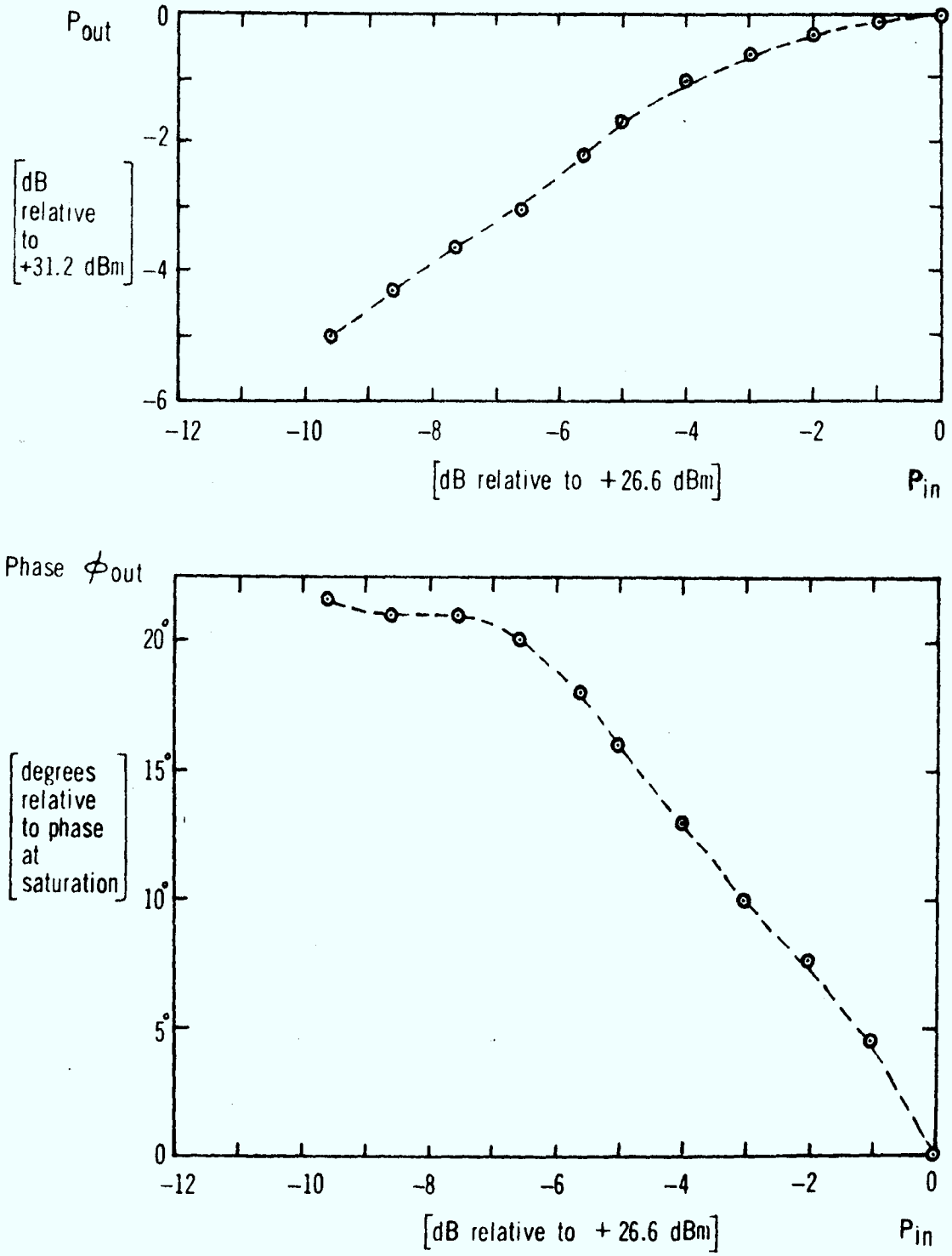

Figure 4.1 – Nonlinear $P_{out}(P_{in})$ characteristic (top) and nonlinear $\phi_{out}(P_{in})$ characteristic (below) for the gain-optimized amplifier. In both cases saturation is the zero reference.

Table 4(2) - Measured 2-carrier behaviour of the gain-optimized class A amplifier compared with the predictions of the MING program.

Quantity		Measured	Computed
Carrier Frequencies	f_1	1.998 GHz	-
	f_2	2.002 GHz	-
Collector bias, no RF		30 mA	-
V_{cc}		28 V	-
P_{in}(total)		+ 23.00 dBm	+ 22.72 dBm
P_{out}(total)		+ 29.5 dBm (wideband)	+ 29.5 dBm (carriers only)
Efficiency η_c		28.9%	-
Gain G		6.5 dB	6.7 dB
Relative levels of spectral components	$3f_1 - 2f_2$	-23 dB	-24.7 dB
	$2f_1 - f_2$	-15 dB	-15.6 dB
	f_1	0 dB	0 dB
	f_2	-2 dB	0 dB
	$2f_2 - f_1$	-15 dB	-15.6 dB
	$3f_2 - 2f_1$	-25 dB	-24.7 dB

(41652–70)

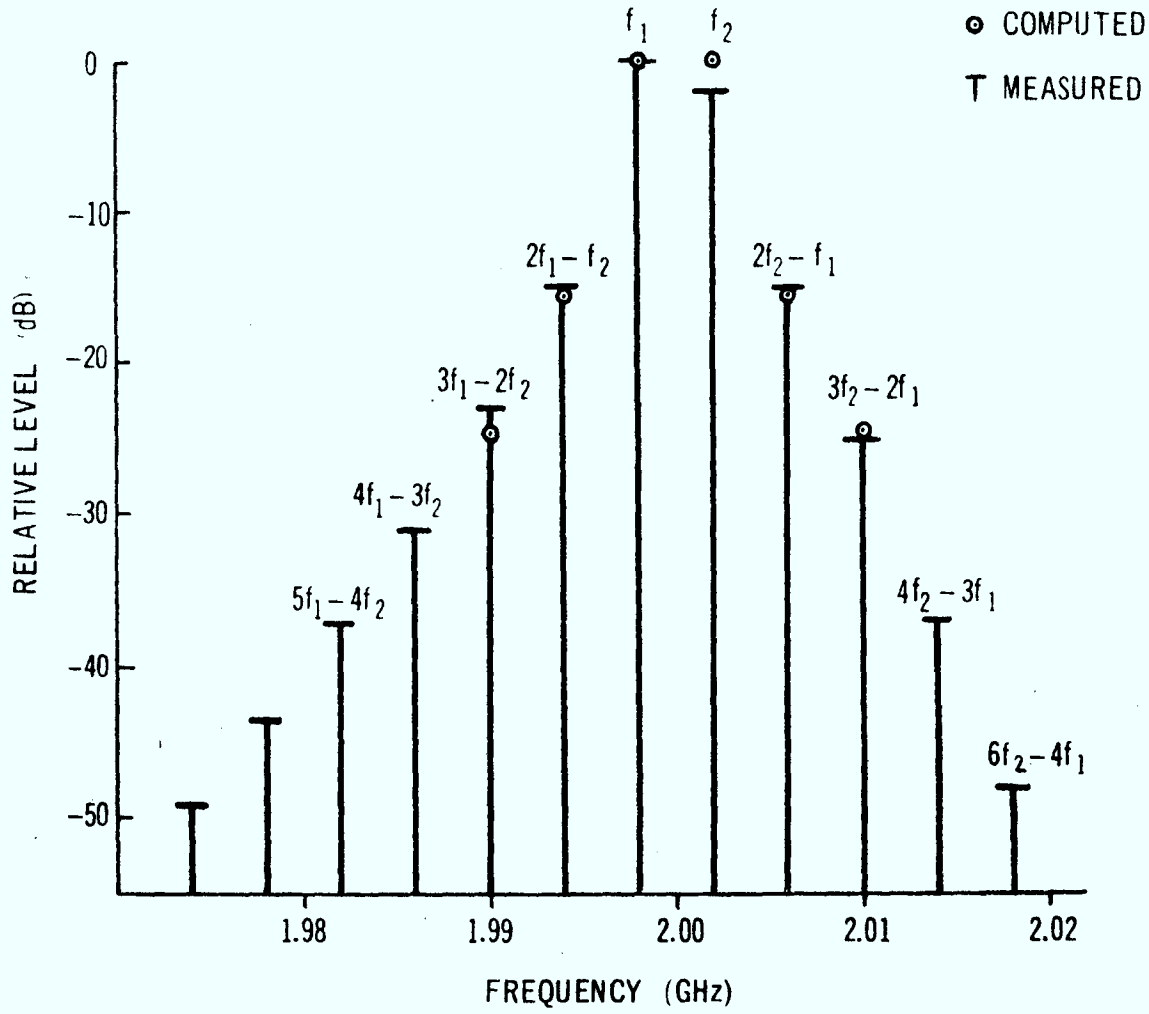

Figure 4.2 – Measured 2-carrier IMD spectrum compared with values computed by the MING program; gain-optimized case.

levels one can obtain*. In the present case a minimum gain of ~ 4 dB was selected.

This IMD-minimization was done at a fixed value of P_{in}(total)**. Then, without re-adjusting tuning or bias, P_{in}(total) was varied over a range of levels to determine the dynamic range of the low IMD-condition. For each value of P_{in}(total) the following amplifier properties were measured: gain G, bias conditions, efficiency η_c, and the output levels of the individual carriers f_1 and f_2 and the third order IMD products $2f_1 - f_2$ and $2f_2 - f_1$. Having determined these properties over a sufficiently wide dynamic range, the transistor amplitude and phase characteristics were determined as described before using a single carrier.

Table 4(3) gives measured single-carrier data for the amplifier when optimized for low IMD with two input carriers. For this table the single carrier input power is equal to the total 2-carrier input power. Figure 4.3 depicts the measured nonlinear amplitude and phase characteristics. Compared with the corresponding characteristics of the gain-optimized amplifier, Figure 4.1, the $P_{out}(P_{in})$-characteristic is much more nearly linear and, except for the maximum-P_{in} point, the AM-to-PM conversion $\partial\phi_{out}/\partial P_{in}$ is approximately halved.

Table 4(4) compares the measured two-carrier performance with the results computed by the MING program for the case of the optimization power level. The measured and computed results are compared over the

---

* Extremely low levels of IMD relative to the carrier levels can be obtained for gains of 1 dB or less!

** 21.3 dBm to agree with the earlier experimental work of Moody and Boag[4].

Table 4(3) - Single-carrier data for amplifier optimized for the low-IMD condition (given for the optimization level only).

Transistor:	2N5470
Mode:	Tuned and biased for minimum IMD
Frequency:	1.800 GHz, single carrier
Emitter Bias:	0.252 volts (forward)
Collector Bias:	55 mA, with RF applied
V_{cc}:	28 volts
P_{in}:	+ 21.3 dBm
P_{out}:	+ 25.6 dBm
G:	4.3 dB
η_c:	23.6 %

(41652-103:2/19-6-72)

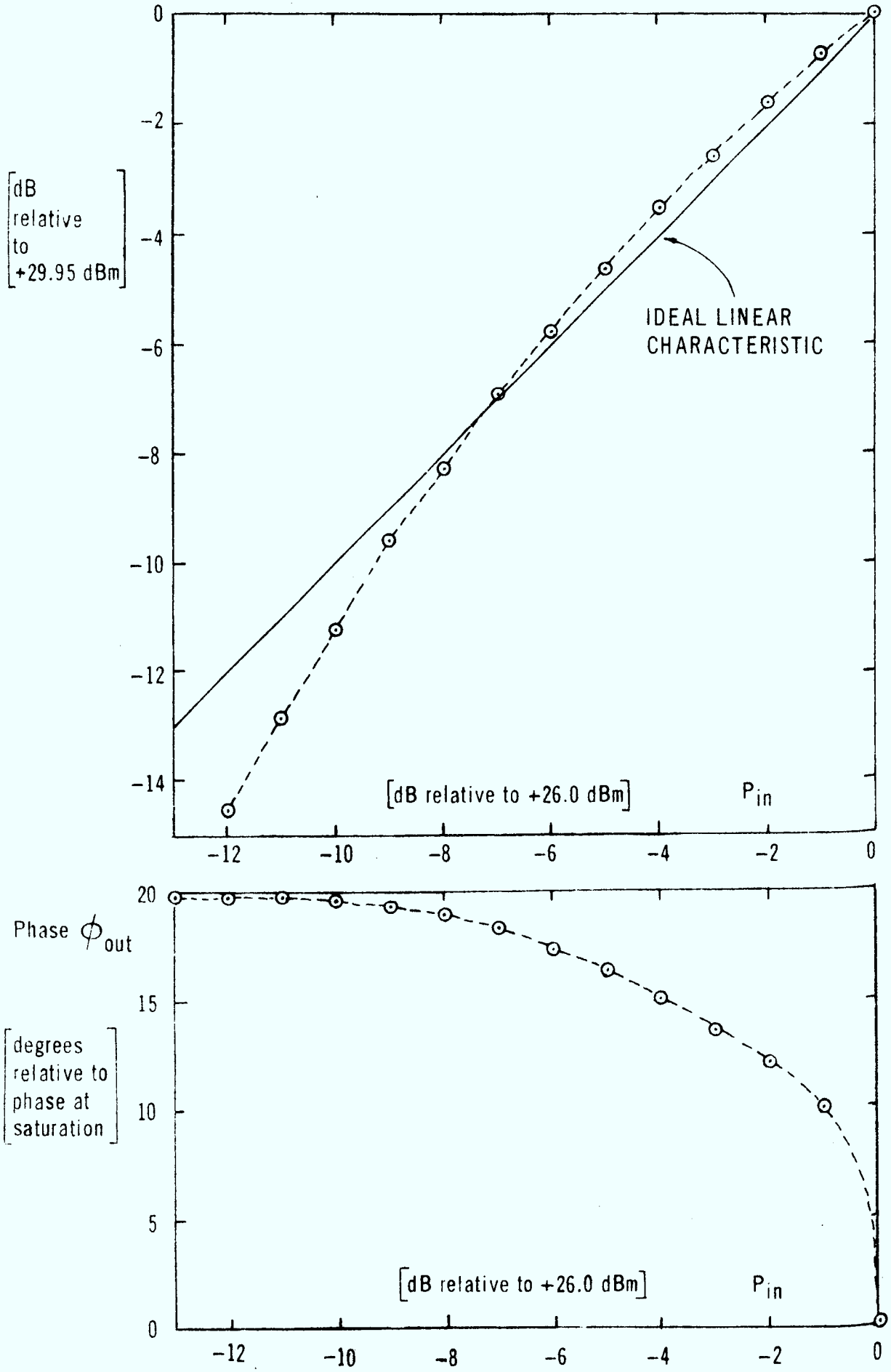

Figure 4.3 – The measured $P_{out}(P_{in})$-characteristic (top) and $\phi_{out}(P_{in})$-characteristic (below) for the low-IMD case.

Table 4(4) - Measured 2-carrier behaviour of the amplifier when optimized for the low-IMD condition. (Given for the optimization level only).

Quantity		Measured	Computed
Carrier Frequencies	f_1	1.79975 GHz	-
	f_2	1.80025 GHz	-
Emitter bias, RF applied		0.269 volts (forward)	-
Collector bias, RF applied		51 mA	-
P_{in}(total)		+ 21.3 dBm	+ 21.45 dBm
P_{out}(total)		+ 25.7 dBm	+ 25.7 dBm
Efficiency η_c		26 %	-
Relative levels of spectral components.	$2f_1 - f_2$	- 28 dB	- 25.04
	f_1	0	0
	f_2	0	0
	$2f_2 - f_1$	- 27 dB	- 25.04

dynamic range in Figure 4.4. As remarked above, the efficiency cannot be computed from the gain/phase amplifier model. However, the calculations of gain G and the third-order IMD product levels I_3/C agree with measurement quite well over a dynamic range of 6 dB: the computed gain is within 0.6 dB of measurement; the computed I_3/C levels agree within 4 dB. Most of the discrepancy is attributed to the imperfections in the fitting of the Bessel series caused by the sudden change of slope of the $\phi_{out}(P_{in})$-characteristic near the maximum value of P_{in}.

4.3 Computations of Multicarrier Performance under the Low-IMD Condition

Because of the good agreement reported in the previous section between the measured and computed 2-carrier performance of the microwave power transistor amplifier, a sequence of computations was performed to determine how the amplifier would behave for inputs consisting of different numbers of carriers. To simulate a realistic application, the input power per carrier was held constant for each computation, i.e. the total input power was proportional to the number of input carriers.

Results are given for 12, 9, 6, 4, 3, and 2 carriers. The total input power P_{in} in the 12-carrier case is +20.9 dBm. It was found that significantly greater values of P_{in} led to amplitude excursions beyond the range where the Bessel-series approximation remains valid, leading to meaningless results. This situation could be remedied by characterizing the amplifier over a wider dynamic range.

The transistor amplitude/gain characterization used is the one

(41652-99)

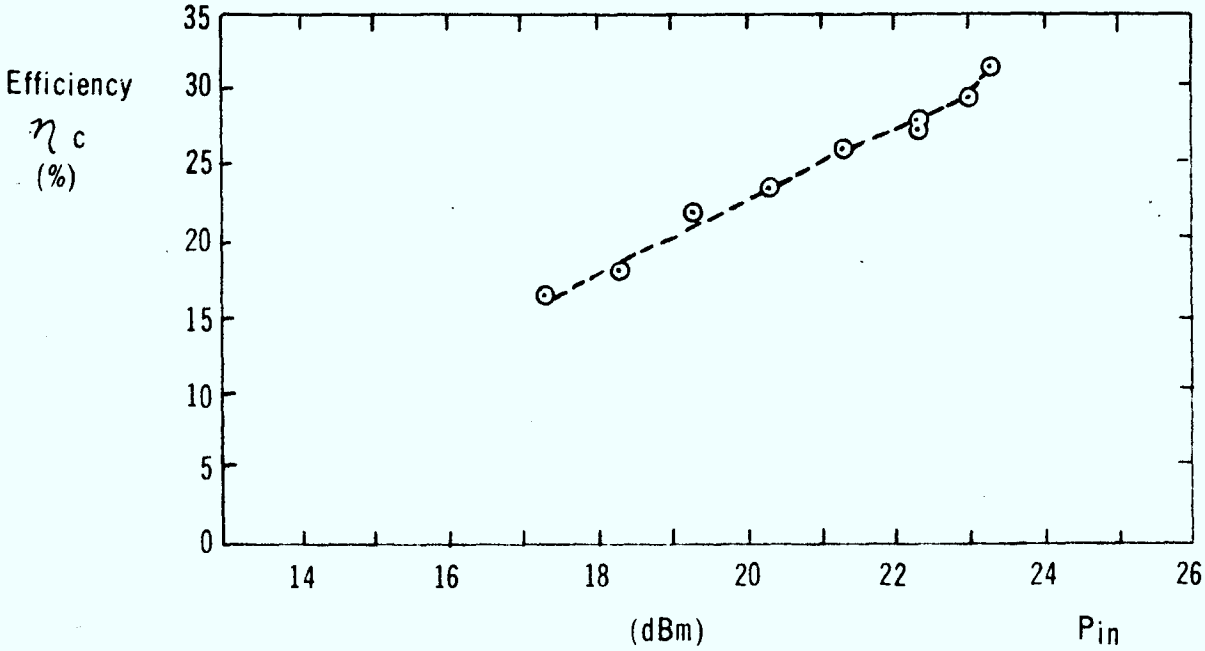

(41652-99: 30-6-72)

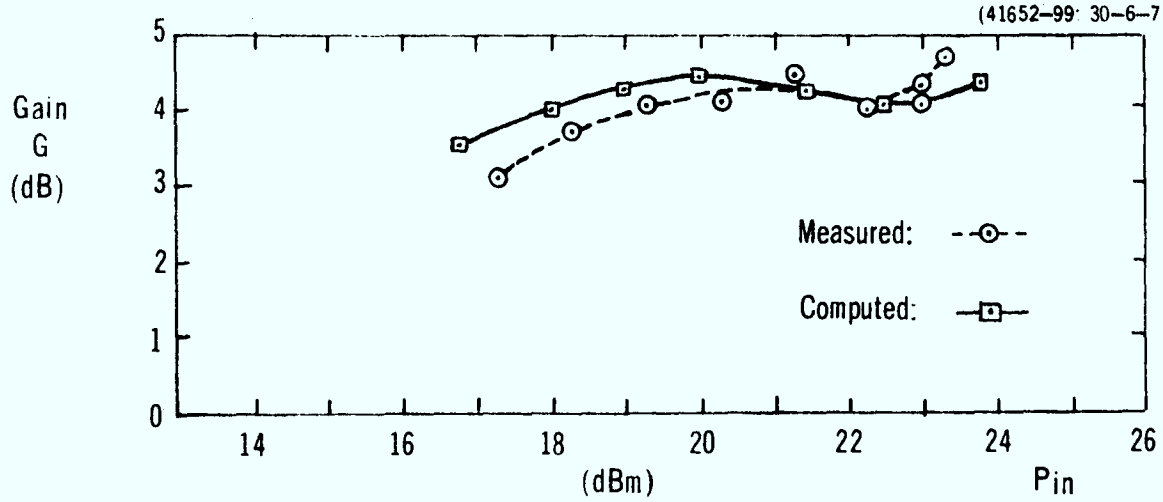

(41652-99: 30-6-72)

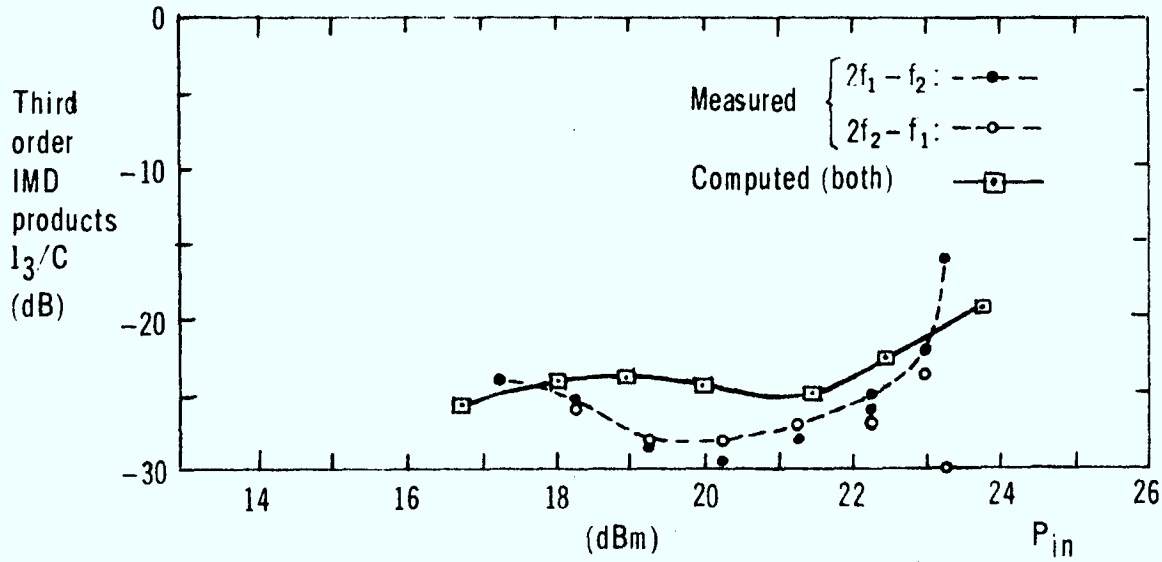

Figure 4.4 – Measured and computed 2-carrier performance of amplifier optimized for low IMD: efficiency (top), gain (middle), IMD/carrier levels (bottom). Carriers: f_1 = 1.79975 GHz, f_2 = 1.80025 GHz.

described in section 4.2 for the case where the IMD is minimized for 2-carriers at +21.3 dBm. This is not necessarily exactly the same adjustment that would be found in practice for a 12-carrier input at +20.9 dBm, i.e. the results computed here are likely to be pessimistic rather than optimistic.

In its present form MTNG calculates third, fifth and seventh-order IMD products, including those which happen to fall on the carrier frequencies. Both on- and off-carrier products are shown in Figures 4.5 to 4.10. The spectrum for 12 carriers, Figure 4.5, shows rather high IMD levels, the worst case being -12.68 dB below the output carrier levels. The worst IMD levels for fewer carriers lie between -18.28 dB and -22.28 dB below the carrier levels. This may indicate that the IMD "takes off" for > 12 carriers. Keeping the power input per carrier approximately constant, it is found that the gain drops as the number of carriers diminishes from a high of 5.00 dB for 12-carriers to an unusable 1.86 dB for 2-carriers. The latter case is included only for completeness.

The results are summarized in Table 4(5).

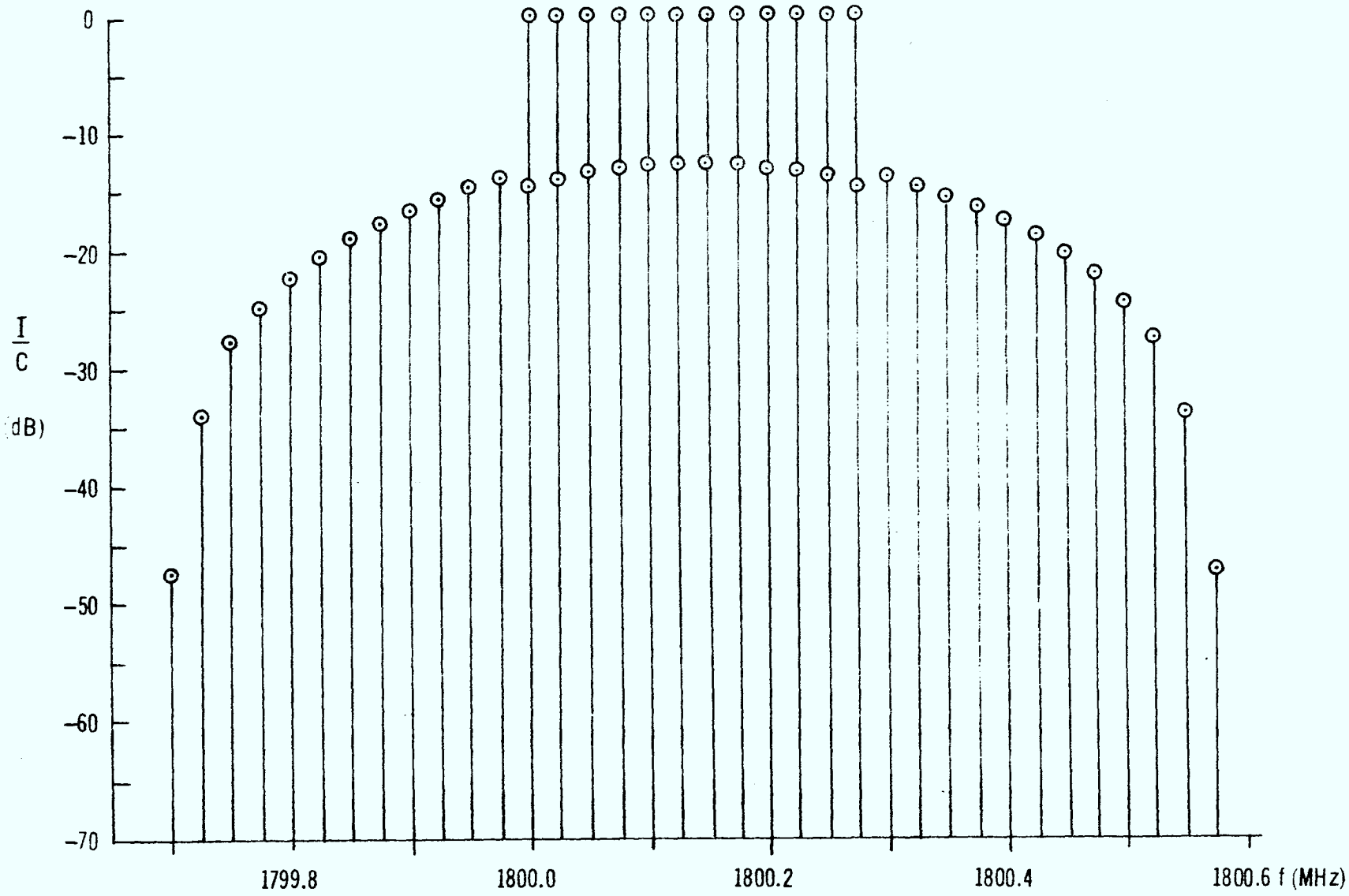

Figure 4.5 – Computed IMD spectrum for 12 input carriers under the low-IMD condition.
Total input power = +20.97 dBm, gain = 5.0 dB

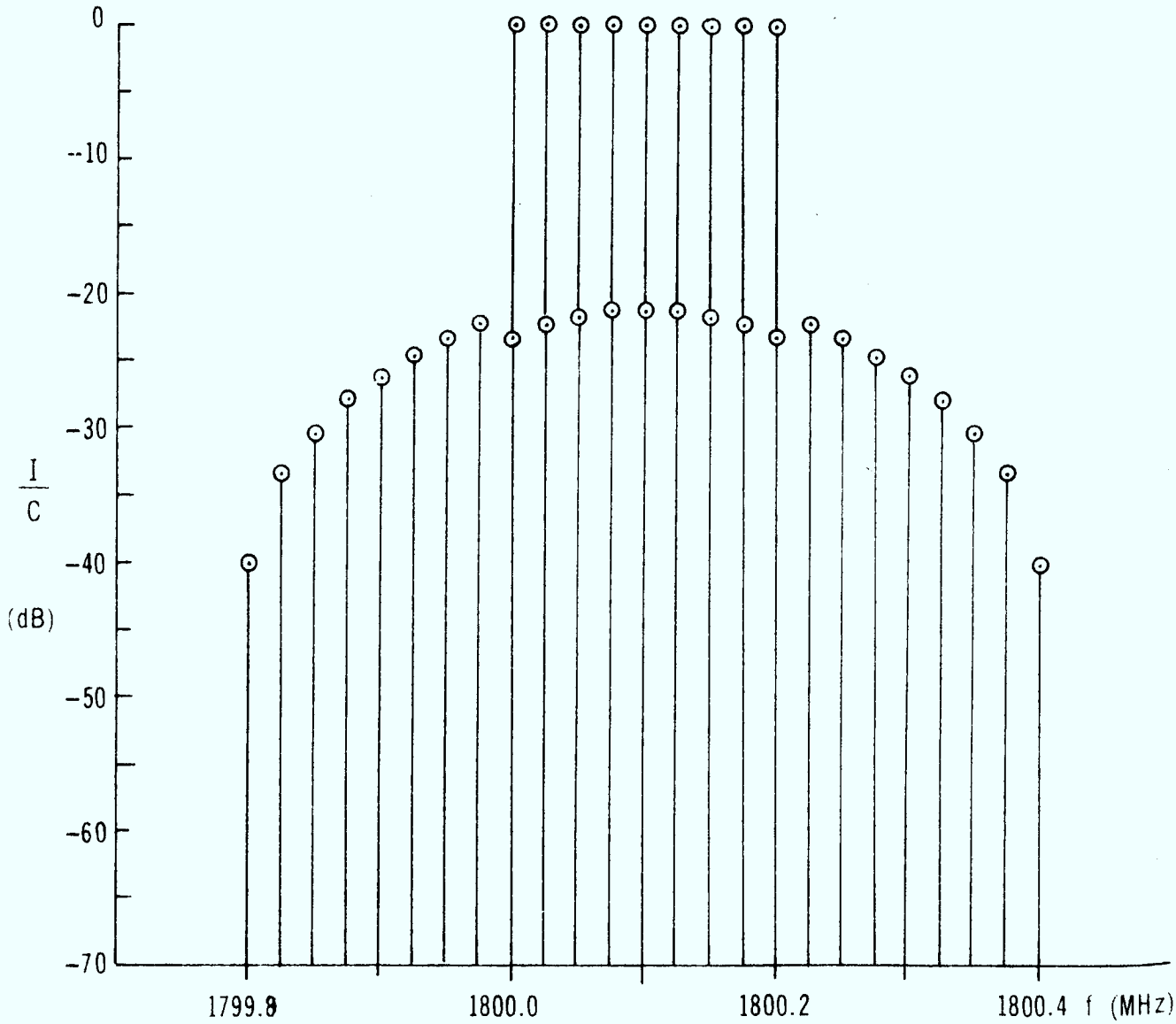

Figure 4.6 – Computed IMD spectrum for 9 input carriers under the low-IMD condition. Total input power = +19.86 dBm, gain = 4.14 dB.

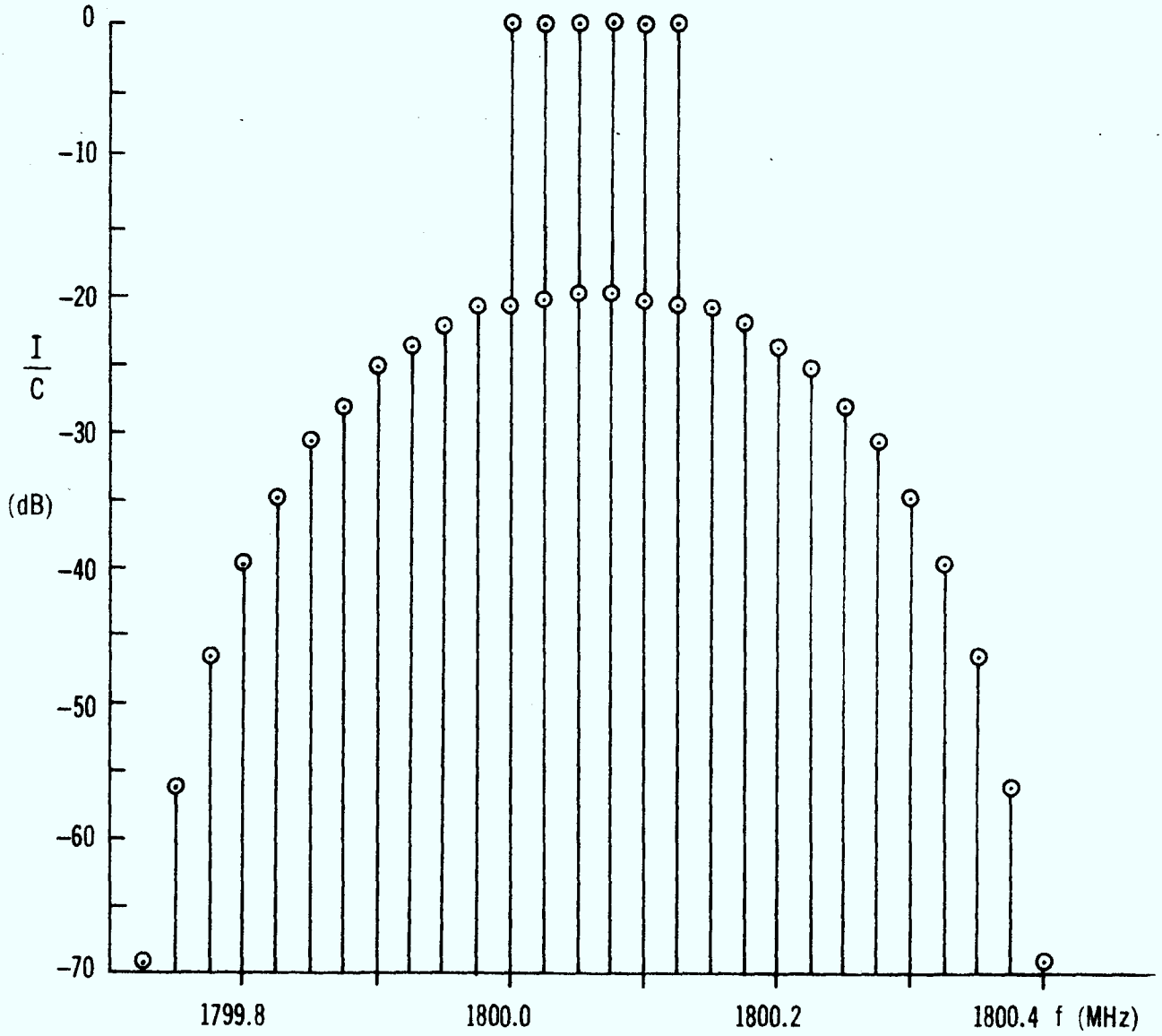

Figure 4.7 – Computed IMD spectrum for 6 input carriers under the low-IMD condition. Total input power = +17.89 dBm, gain = 3.79 dB

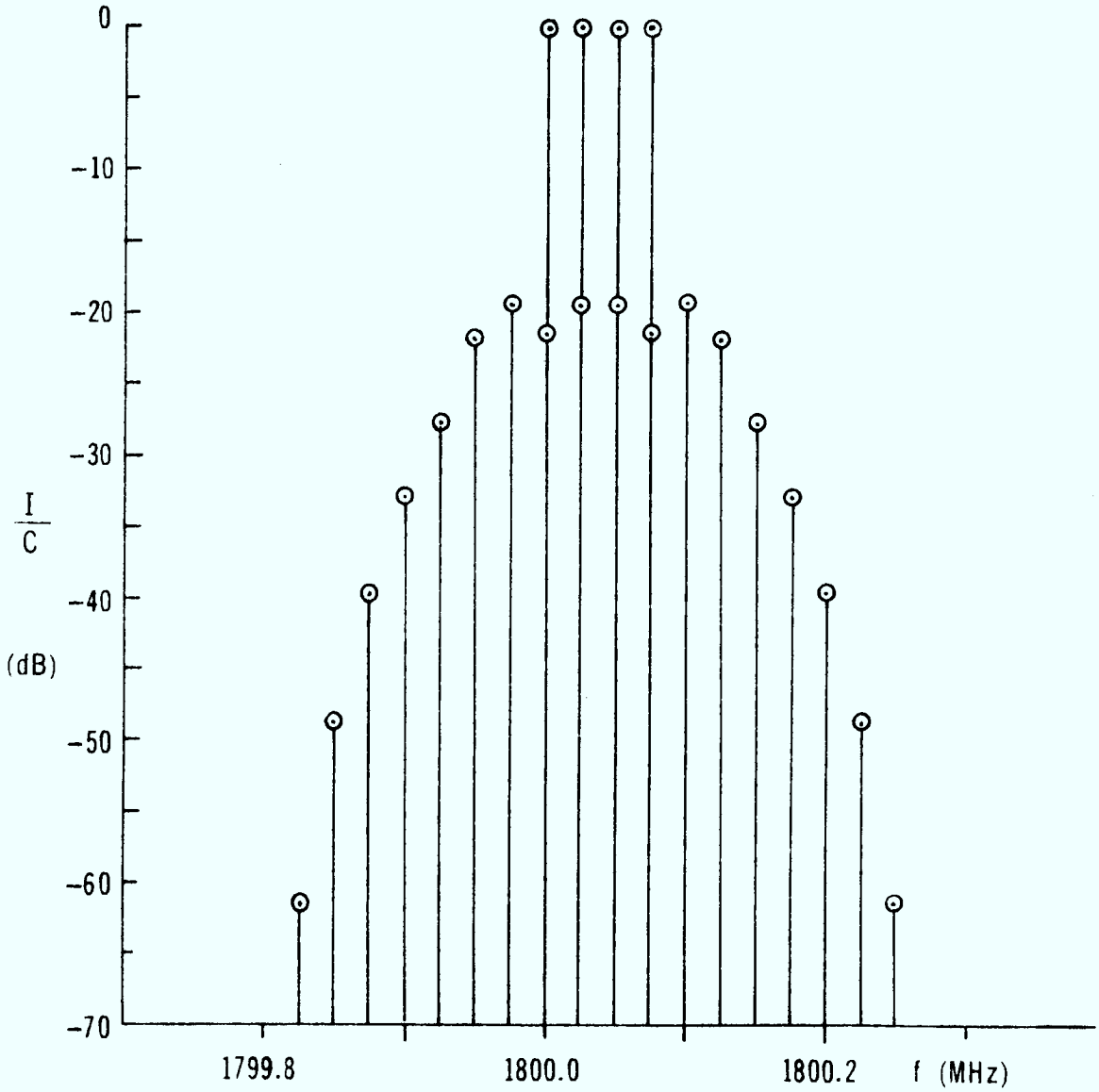

Figure 4.8 – Computed IMD spectrum for 4 input carriers under the low-IMD condition. Total input power = +16.2 dBm, gain = 3.32 dB.

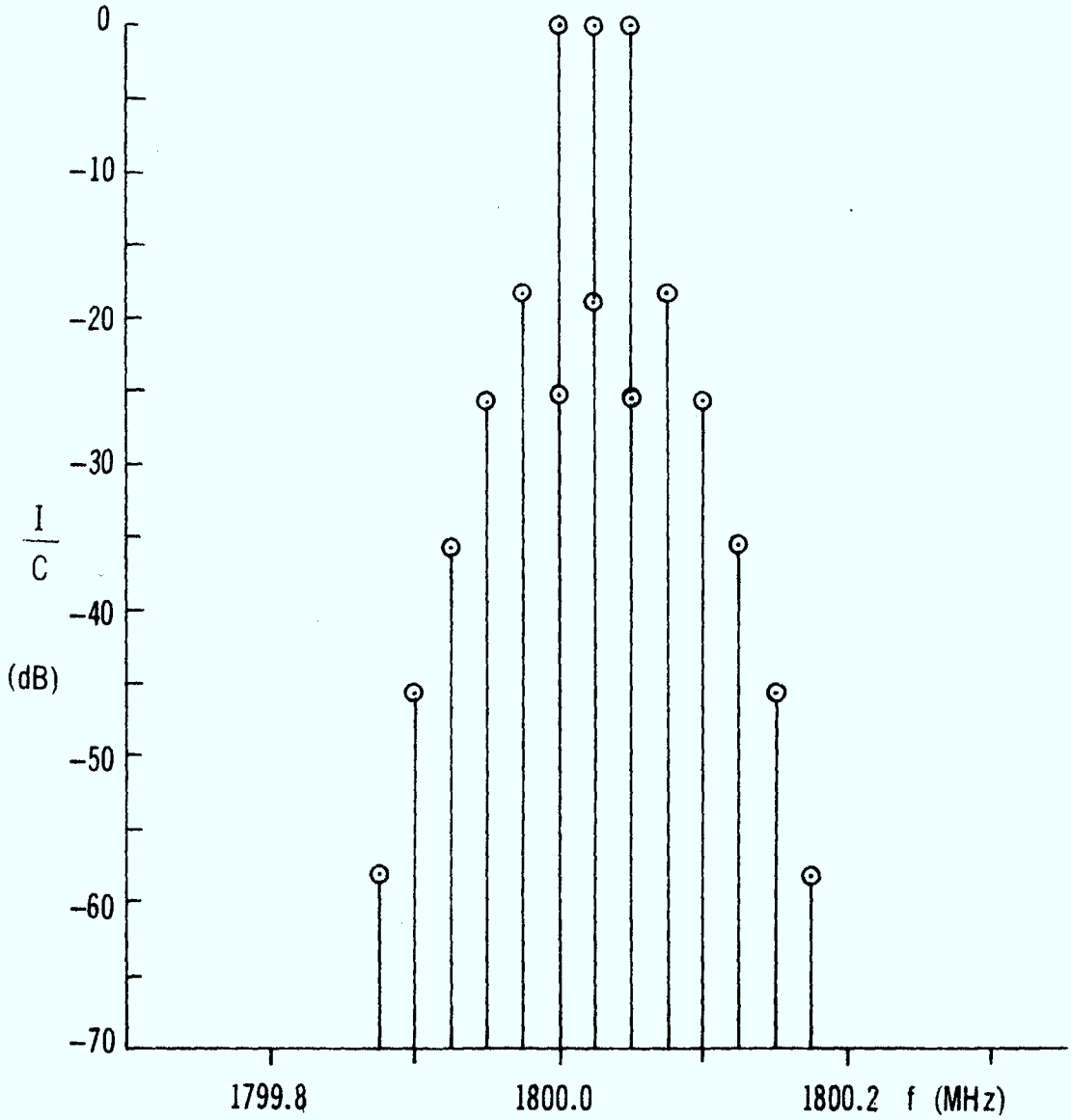

Figure 4.9 – Computed IMD spectrum for 3 input carriers under the low-IMD condition. Total input power = + 14.96 dBm, gain = 2.77 dB.

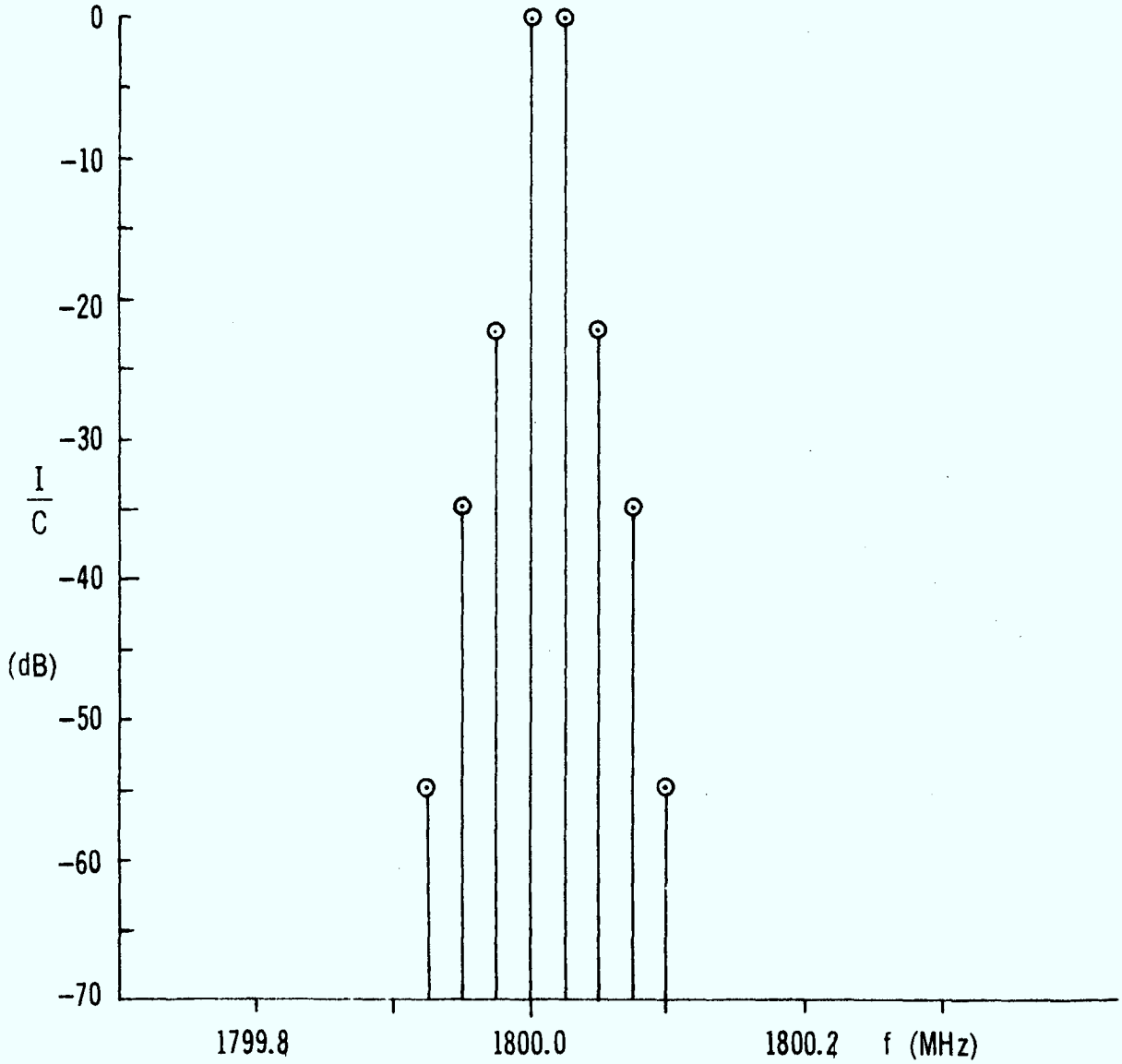

Figure 4.10 – Computed IMD spectrum for 2 input carriers under the low-IMD condition. Total input power = + 13.24 dBm, gain = 1.86 dB.

Table 4(5) - Summary of predicted behaviour of "low-IMD" amplifier under multicarrier conditions.

Number of Carriers	Total Input Power	Gain	Worst IMD Product level I/C
12	+20.97 dBm	5.00dB	- 12.68 dB
9	+19.86 dBm	4.14dB	- 21.27 dB
6	+17.9 dBm	3.79dB	- 19.87 dB
4	+16.2 dBm	3.32dB	- 19.23 dB
3	+14.96 dBm	2.77dB	- 18.28 dB
2	+13.2 dBm	1.86dB	- 22.28 dB

5. CONCLUSIONS

It has been demonstrated that the in-house computer program MING, in conjunction with the NLRGRES nonlinear least-squares curve-fitting program, constitutes a powerful means for computing the intermodulation distortion due to a microwave power transistor, not only under conditions of maximum class A gain but also under special tuning and biasing conditions which lead to a low-intermodulation-distortion mode of operation, ($I/C \simeq -25$ dB). Additional computed results for multiple input carriers show that for the same amplifier adjustment, I/C should remain below - 18 dB for 2 to 9 carriers, rising to about - 12 dB for 12 carriers.

It is suggested that this method be next applied to the prediction of IMD levels in other microwave devices, such as the transferred electron amplifier (TEA). It should also be tested for class C transistor operation.

6. REFERENCES

[1] O. Shimbo, "Effects of intermodulation, AM-PM conversion, and additive noise in multicarrier TWT systems", Proc. IEEE, Vol. 59, no. 2, February 1971, pp. 230-238.

[2] O. Shimbo, private communication to H. Moody, RCA Limited, 17 February 1972.

[3] D.W. Marquardt, "Least squares estimation of nonlinear parameters", a computer program in the Fortran IV language; IBM SHARE library, Distribution no. 3094, March 1964. (Successor to Distribution no. 1428).

[4] H. Moody, J.C. Boag, Experimental results reported in: "UHF Communications Satellite System", Final Report, Vol. II, DDS Contract OPL1-0005, RCA Limited, December 9, 1971 (see pp. 58, 59).

APPENDIX B

HYBRID COMBINING NETWORK

The following configuration is assumed (see Figure 5.2). Two amplifiers each carrying identical signals feed the two input ports of a 90° hybrid. A switched phase shifter is inserted in one of the lines joining the two hybrids. One of the outputs ports of the second hybrid is selected as the output and the other one is terminated. The two amplifiers are assumed to have equal phase at the input to the first hybrid.

The scattering matrix approach is used to calculate the network as a function of phase shift inserted in the line. For a 90° sidewall hybrid the scattering is

$$s = \frac{1}{\sqrt{2}} \begin{matrix} 0 & 0 & -j & 1 \\ 0 & 0 & 1 & -j \\ -j & 1 & 0 & 0 \\ 1 & -j & 0 & 0 \end{matrix}$$

where 1 and 2 are the input ports and 3 and 4 are the output. Multiplying this by the appropriate input, adding the phase shift and performing the second multiplication we have

$$A3 = -j - je^{-j\phi}$$

$$A4 = 1 - e^{-j\phi}$$

$$B3 = -1 + e^{-j\phi}$$

$$B4 = -j - je^{-j\phi}$$

$$AB3 = -j - je^{-j\phi} - e^{-j\theta} + e^{-j\phi} e^{-j\theta}$$

$$AB4 = 1 - e^{-j\phi} - je^{-j\theta} - e^{-j\phi} e^{-j\theta}$$

Where A4 is the signal appearing at port 4 when amplifier A only is on etc. and AB4 is the signal appearing at port 4, when both A and B amplifiers are on.

The variation of A4, B4 and AB4 with phase shift are shown in Figure B1 with phase shift $\theta = 0$.

The condition $\theta = 0$ is the only condition in which all the energy can be transferred to one of the output ports when both amplifiers are operating. When θ is different from zero there is some energy loss to port 3 even at the optimum value of ϕ

The required phase conditions can be established by using a switchable phase shifter with two identical sections, each having stable phase shifts of 0 and 90 degrees. When both sections are in the zero phase shift condition the full output will appear at port 4 if only amplifier B is turned on. If one phase shifter is set to 90 degrees the full output of both amplifiers will appear at output 4. If only amplifier A is turned on then both phase shifters must be switched to 90 degrees.

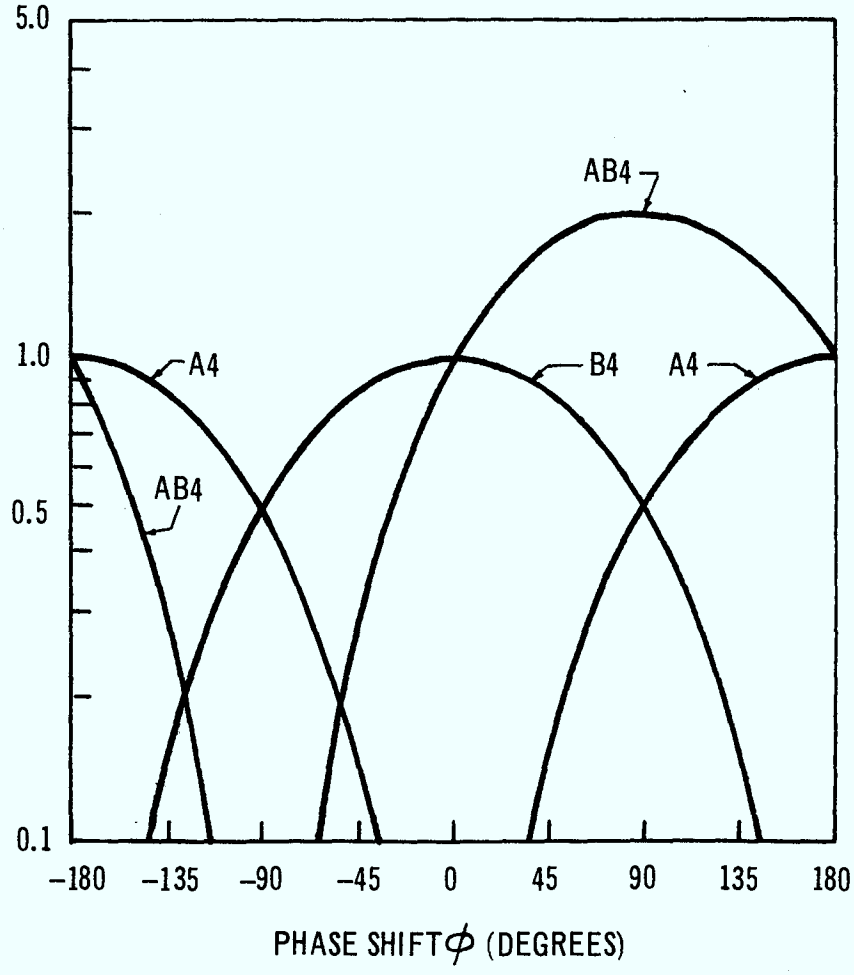

Figure B-1 – Output power appearing at port 4 as a funcrion of phase shift ϕ when

(1) Amplifie A only is operating (A4)
(2) Amplifier B only is operating (B4)
(3) Both amplifiers A and B are operating (AB4)

EXECUTIVE SUMMARY AND FINAL REPORT
ON FEASIBILITY STUDY OF A TWO BAND
UHF COMMUNICATIONS SATELLITE

RCA

PRINTED IN CANADA