UNIVERSITÉ DE MONTRÉAL

The use of special-purpose hardware in videotex systems

Final Report for DSS contract No. 20SU.36100-1-0169

by Gregor v. Bochmann and Jan Gecsei

Département d'informatique et
de recherche opérationnelle

August 1982

DÉPARTEMENT D'INFORMATIQUE
ET DE RECHERCHE OPÉRATIONNELLE

Faculté des arts et des sciences
Université de Montréal
C.P. 6128, Succursale "A"
Montréal, P.Q.
H3C 3J7

The use of special-purpose hardware in videotex systems

Final Report for DSS contract No. 20SU.36100-1-0169

by Gregor v. Bochmann and Jan Gecsei

Département d'informatique et
de recherche opérationnelle

August 1982

DOC CONTRACTOR REPORT

DEPARTMENT OF COMMUNICATIONS - OTTAWA - CANADA

COMMUNICATION SYSTEMS RESEARCH AND DEVELOPMENT

TITLE: The use of special-purpose hardware in videotex systems

AUTHOR(S): Gregor v. Bochmann and Jan Gecsei

ISSUED BY CONTRACTOR AS REPORT NO:

CONTRACTOR: Université de Montréal

DEPARTMENT OF SUPPLY AND SERVICES CONTRACT NO: 20SU.36100-1-0169

DOC SCIENTIFIC AUTHORITY: Dr. M. Sablatash

CLASSIFICATION: unclassified

DATE: August 1982

The use of special-purpose hardware in videotex systems

Final Report for DSS contract No. 20SU.36100-1-0169

by Gregor v. Bochmann and Jan Gecsei

Département d'informatique et

de recherche opérationnelle

Université de Montréal

August 1982

1. Overview of possibilities for special-purpose hardware in videotex

A typical videotex system is shown in Figure 1. It consists of display units D, terminal controllers (decoders) T, service provider terminals SPT, service computers SC, videotex database VDB, the telephone network, external computers EC with databases and other applications, and a data network DN.

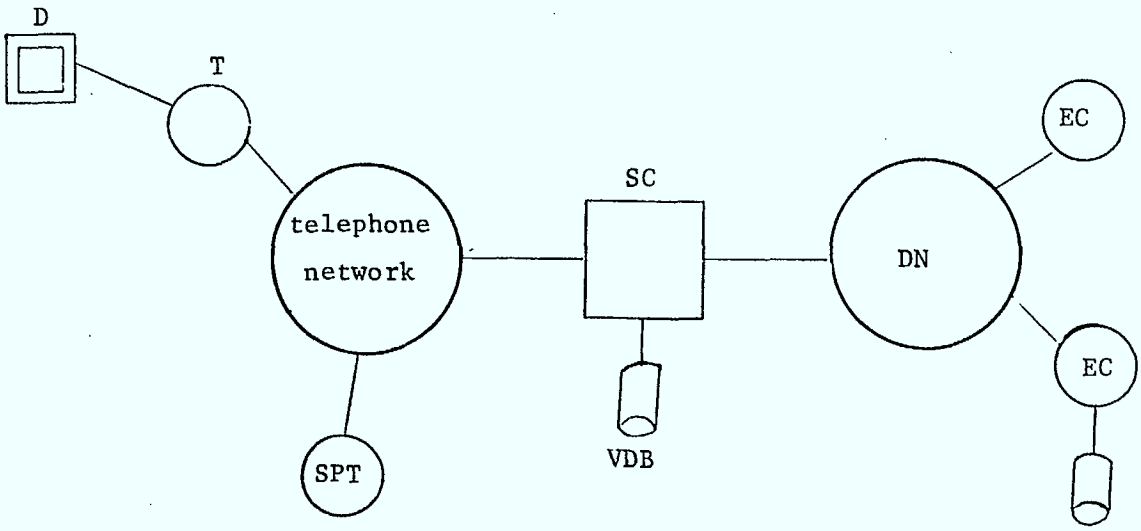

Figure 1

In this overview we will point out those parts of the system which might benefit functionally and performance-wise from non-standard components. Note that the notion of "special purpose hardware" is relative, from several points of view. First, the border-line between hardware and software is not clear: does a bit-sliced microprocessor with a special microprogram (say for fonctioning as a fast PDI decoder) qualify? Second, how about standard, off-shelf hardware components used in an unusual context (e.g. as buffer memory for a videotex database)? Without pursuing this issue further, we list some possibilities in the context of Fig. 1, which in our view merit to be called "special purpose".

a) Non-standard display units (the TV set being considered as standard). Here belong monitors, double standard (525 and 625 line switchable) units, and high resolution (eg. 512 x 512) terminals capable of displaying 40 or 80 chars/row. A still different kind are small black and white displays.

b) Interface cards enabling personal computers such as Apple to decode PDI strings.

c) Intelligent terminals, obtained from standard microprocessor based decoders by enhancing them for telesoftware and local programmability.

d) Service provider terminals and systems.

e) Videotex service computers for high numbers of users. These are specially designed multiprocessors with high degree of functional specification; examples are the Bildschirmtext

trial and commercial systems.

f) Various components (and related methods) to enhance database performance. This is important, because in many cases the database access is the main system bottleneck.

g) For completeness we should mention teletext equipment such as frame inserters, modulators, cable equipment and communication equipment (multiplexers, X.25 cards, etc.)

The work reported in this contract focuses on two items from the above list which we consider most important for the future of videotex: database enhancement and intelligent terminals.

These topics are the subject of three separate reports. The first, "Memory structures for videotex systems" by N. Horspool and G.v. Bochmann deals with the effect of implementing the database on a memory hierarchy containing high-speed buffer memory. The second, "Behavior of videotex databases by J. Madelaine et al. introduces a Markov chain model of a page oriented database and a method to obtain access probabilities to various parts of the database, derived from probabilities of possible user actions. The application of these results is illustrated for the case where disk throughput (access rate) is to be increased by the duplication of some pages.

The third report, "Intelligent videotex terminals" by J. Gecsei discusses the ramifications and service enhancements attainable with slightly enhanced terminal equipment.

2. Conclusions and recommendations

1. A number of methods involving hardware and data management methods are available to enhance database performance. Among them are database duplication to overlap multiple disk accesses, duplication of high access pages (tracks) on the same disk to reduce average access time, and memory hierarchies, where faster memory (CCD, bubble semiconductor) contain high access pages.

2. The quantitative benefits obtainable from these methods critically depend on the non-linearity of the access probabilities as a function of the fraction of data accessed. Such data are generally unavailable for videotex databases. We made some sample calculations with experimental data obtained from the BC field trial. These data fit reasonably well with the Zipf-Bradford law. The Markov model of page access leads to a generalisation of the Zipf law, but we lacked experimental data for verification.

3. Since such data are difficult to come by, field trial operations should be asked to supply usage statisties into a central repository (possibly under DOC sponsorship).

4. It seems that movable head disk technology will remain the main work-horse for storing large amounts (>20 MB) of videotex data for the next 5 years, until the new technologies will become less expensive.

5. Database machines based on various head per track devices, associative memories, dedicated index processing machines and set processors do not seem to have at the present a great potential for videotex. This is due to their cost, and because these machines are most effective for complex relational queries. To significantly increase the access rate to large amounts of data as in videotex, faster access is an imperative as discussed above. Database machines can be of some help in speeding up index and keyword search operations, but it is doubtful whether this is a cost effective method.

6. The use of intelligent terminals points to an economically and functionally very attractive way to upgrade videotex (and maybe to break the chicken and egg vicious circle hampering its development).

7. Telesoftware and local programmability (but not necessarily local mass storage) are the key elements in this process. The incremental cost for the additional functions is around $100-200.

8. In order to draw full benefit from the new terminal features, a videotex system should be designed as a Distributed

Processing Videotex Network (DPVN). Its main characteristic is the cooperative execution of concurrent programs (e.g. in the terminal and service machine, or in several user terminals).

9. An important task is the systematic design of such a DPVN, drawing upon the experience from similar systems. This will assure that the necessary protocols and standards will be identified and that new applications with telesoftware will not be ad hoc as is presently the case. In this context one should keep an eye on the development of the Architel system in France, aiming at a unified architecture and interworking for all telematique and similar applications to be developed in the OSI (Open Systems Interworking) context.

10. The most important technical problems to be resolved are schemes for naming and addressing objects (programs, files, terminals etc.) on a systemwide scale, enabling orderly communication between objects.

11. DPVN should be designed in such a way that intelligent terminals (a suitable name might be Intelidon) and new applications they cater for are a superset of a standard system. Intelidon is a top-of-the-line terminal.

12. For those to whom the above proposals might seem far-fetched, complicated or expensive, we remark that most of the sample applications listed in the Report (and many others) <u>have</u>

already been implemented in Austria, an intelligent terminal is available for $7,00/month (!), and Austria might be well on its way to have the first DPVN.

BOCHMANN, GREGOR V.

The use of special-purpose hardware in videotex systems.

DATE DUE
DATE DE RETOUR
