Defence Research and Development Canada
Recherche et développement pour la défense Canada

DRDC | RDDC
technologysciencetechnologie

Practice Mine (FFV 028) LED Response Circuit: Design and Instructions

K. Sharma
C. Mosquera
S. Irvine
DRDC – Suffield Research Centre

Defence Research and Development Canada
Reference Document
DRDC-RDDC-2018-D063
August 2018

Canada

IMPORTANT INFORMATIVE STATEMENTS

Abstract

This reference document describes a circuit that employs a 555 timer integrated chip to give a LED response to the trigger of a modified FFV 028 magnetic influence mine. The operational theory, circuit design, and operating instructions of this circuit are discussed

Résumé

Dans ce document de référence, on décrit une puce avec minuterie intégrée 555 à DEL qui active le déclencheur d'une mine magnétique à influence modifiée FFV 028. On y aborde la théorie opérationnelle, la conception du circuit et le mode d'emploi.

1 Introduction

The FFV 028 is a Swedish anti-tank mine that was designed in the 1970s. It utilizes a magnetic fuze as a trigger mechanism. When a vehicle passes over the mine, the fuze initiates detonation. The FFV 028 is capable of penetrating the belly armor of most tanks, and the explosion of the mine can cause significant damage to both vehicles and personnel [1].

In an effort to better understand the operation and limitations of magnetically activated mines, the FFV 028 pictured in Figure 1 underwent significant modification. The explosive material inside was removed, and leads connecting to its magnetic influence fuze were added. Previously, a relay circuit was employed in field trials that connected to these leads. With this circuit, a mine trigger would cause a flash-lamp to release a brief burst of light. An upgrade was desired, as this circuit required a new flash-lamp after each mine trigger, and the flash-lamp only remained illuminated for a very short amount of time.

A response circuit, implementing a light emitting diode (LED) as a light source, was designed to give a visual response to a FFV 028 practice mine trigger. This circuit requires no replacements or adjustments after each trigger. Additionally, this circuit features an independent power source ($V_{cc} = 9\,\mathrm{V}$), adjustable timing period, and a test switch.

Figure 1: *Top and side view of the FFV 028 practice mine.*

2 Circuit Design

The FFV 028 practice mine produces a short voltage pulse, $V_{trigger}$, when triggered. However, a reduced voltage and an increased pulse duration are required for a practical visual response. This was accomplished with a voltage divider and a 555 timer integrated circuit (IC).

The 555 timer IC has three operating modes: astable, bistable, and monostable. In the astable mode, the 555 timer IC alternates between a high and low output at a set frequency.

The bistable mode requires a trigger to produce a high output and a reset to bring the output low again. The monostable mode maintains a high output for a set time period following a trigger. A monostable circuit was chosen for this design, as the desired response to the mine trigger was a LED that remained illuminated for a set time period. A schematic of the circuit is shown in Figure 2.

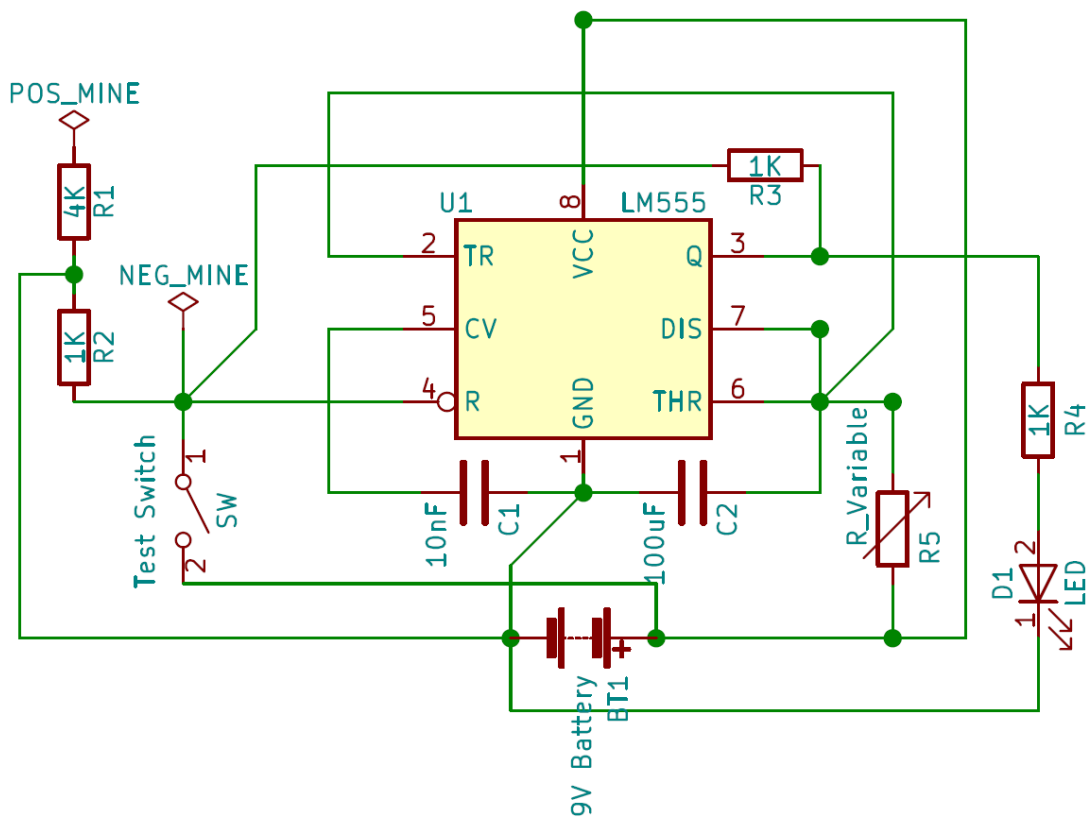

Figure 2: *Schematic diagram of the LED Response Circuit.*

The first stage of this circuit contains a voltage divider with a 4 kΩ primary resistor (R_1) and a 1 kΩ secondary resistor (R_2). This stage ensures that the mine trigger voltage does not exceed the 555 timer IC specifications. With a 4:1 ratio between the resistors and an input voltage $V_{trigger}$ to the primary resistor during the mine trigger, the output at the secondary resistor is 1/5 $V_{trigger}$.

When the mine is triggered, the pulse goes through the voltage divider, and a 1/5 $V_{trigger}$ pulse is sent to Pin 4 (reset) since the negative input from the mine is connected to the 555 timer IC ground. Alternatively, pressing the test switch will cause Pin 4 (reset) to be driven to be driven high (V_{cc}). The discharge pin is pulled low (to ground) when the IC is reset. Hence, the voltage across the 100 μF capacitor, voltage at Pin 6 (threshold) and Pin 2

(trigger) are less than 1/3 V_{cc}, and the IC is triggered. The timing period begins, Pin 3 (Q) is driven high, the LED is powered, and the 100 μF capacitor begins charging. The timing period is complete when the voltage across the 100 μF capacitor, Pin 6 (threshold), and Pin 2 (trigger) increase to 2/3 V_{cc}. Pin 3 (Q) is then driven low and the LED turns off.

3 Operation

The modified mine is powered by two C batteries and has a specific warmup period before it is fully operational. When operational, the mine can be triggered by a change in the magnetic field directly above it (e.g. waving a magnet around). However, the mine requires a short period of time to reset after a trigger event. If the magnetic field above the mine changes during this time, the mine will not be able to trigger again until it is given sufficient time to reset.

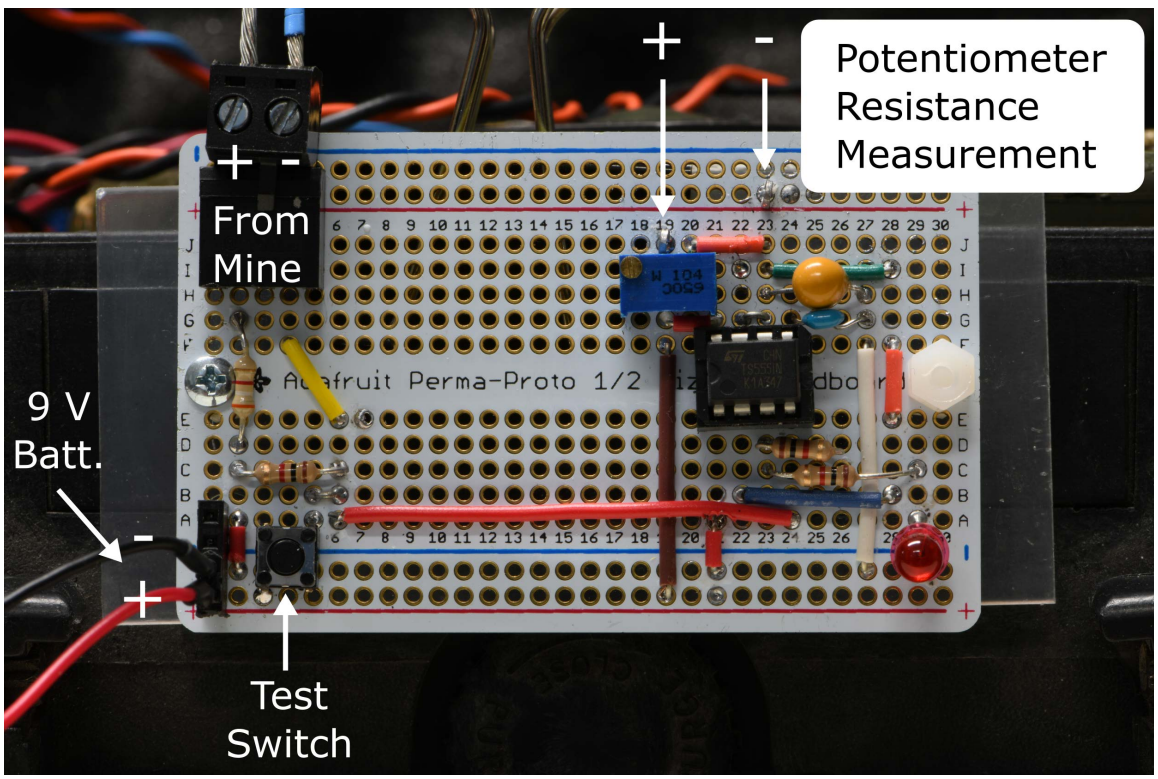

Figure 3: *Labelled picture of the LED Response Circuit.*

To connect the LED response circuit to the practice mine, first connect a 9 V battery to the circuit as shown in Figure 3, with the positive terminal at the rail labelled positive on the board and the negative terminal at the rail labelled as such on the board. The initial connection of the battery will cause the LED to turn on for the specified amount of time. Connect the mine leads, with the positive and negative terminals as labelled in the image.

Use the test switch to ensure that the circuit is working. Keep in mind that the mine itself takes time to reset. A set time constant of about 8 seconds or more will ensure that the mine is able to trigger and fully reset itself before the next trigger.

4 Timing Instructions

The time period during which the LED remains illuminated can be altered by changing the potentiometer (R_5) resistance. The theoretical RC time constant for this circuit is given by the equation:

$$\tau = 1.1 \cdot 100\mu F \cdot R_5$$

Therefore, a 10 kΩ potentiometer resistance value will yield a 1.1 second RC time constant, and a 100 kΩ resistance will yield a time constant value of 11 seconds. Experimental resistance values and the corresponding experimental times are tabulated in Table 1. The proper way to measure the resistance is with the positive DVM terminal connected closest to the potentiometer, and the negative terminal connected at the test point further from the potentiometer. This can be seen in Figure 3.

Table 1: *Experimental results: Potentiometer Resistance and Time Constant.*

Time (s)	0.5	1	2	3	5	7	10	11 (max)
Resistance (kΩ)	4.7	9	19	27	54	61	91	100 (max)

5 Conclusion

This LED response circuit is a device that provides a convenient visual signal when the FFV 028 is triggered. The adjustable timing period and LED light source mark a significant improvement over the previous design, which required flash-lamps to be replaced after each mine trigger.

A limitation of the current circuit design is that the single LED is not particularly bright, and a possible future design could include multiple LEDs or a stronger light source. A relay that connects to an independent light source is one possible option. Alternatively, a device such as a buzzer, which would give an audible indication of a mine trigger, could also be employed.

References

[1] Colin King. *Jane's Mines and Mine Clearance 2005-2006*. Jane's Information Group Ltd., Coulsdon, Surrey, UK, 2005.

DOCUMENT CONTROL DATA

*Security markings for the title, authors, abstract and keywords must be entered when the document is sensitive

1. ORIGINATOR (Name and address of the organization preparing the document. A DRDC Centre sponsoring a contractor's report, or a tasking agency, is entered in Section 8.) DRDC – Suffield Research Centre Box 4000, Station Main, Medicine Hat AB T1A 8K6, Canada	2a. SECURITY MARKING (Overall security marking of the document, including supplemental markings if applicable.) CAN UNCLASSIFIED 2b. CONTROLLED GOODS NON-CONTROLLED GOODS DMC A

3. TITLE (The document title and sub-title as indicated on the title page.)

Practice Mine (FFV 028) LED Response Circuit: Design and Instructions

4. AUTHORS (Last name, followed by initials – ranks, titles, etc. not to be used. Use semi-colon as delimiter)

Sharma, K.; Mosquera, C.; Irvine, S.

5. DATE OF PUBLICATION (Month and year of publication of document.)	6a. NO. OF PAGES (Total pages, including Annexes, excluding DCD, covering and verso pages.)	6b. NO. OF REFS (Total cited in document.)
August 2018	6	1

7. DOCUMENT CATEGORY (e.g., Scientific Report, Contract Report, Scientific Letter)

Reference Document

8. SPONSORING CENTRE (The name and address of the department project or laboratory sponsoring the research and development.)

DRDC – Suffield Research Centre
Box 4000, Station Main, Medicine Hat AB T1A 8K6, Canada

9a. PROJECT OR GRANT NO. (If appropriate, the applicable research and development project or grant number under which the document was written. Please specify whether project or grant.) 02da	9b. CONTRACT NO. (If appropriate, the applicable contract number under which the document was written.)
10a. DRDC DOCUMENT NUMBER DRDC-RDDC-2018-D063	10b. OTHER DOCUMENT NO(s). (Any other numbers which may be assigned this document either by the originator or by the sponsor.)

11a. FUTURE DISTRIBUTION WITHIN CANADA (Approval for further dissemination of the document. Security classification must also be considered.)

Public release

11b. FUTURE DISTRIBUTION OUTSIDE CANADA (Approval for further dissemination of the document. Security classification must also be considered.)

Public release

12. KEYWORDS, DESCRIPTORS or IDENTIFIERS (Use semi-colon as a delimiter.)

Detection; IEDs; metal detector; mines

13. ABSTRACT/RÉSUMÉ (When available in the document, the French version of the abstract must be included here.)

This reference document describes a circuit that employs a 555 timer integrated chip to give a LED response to the trigger of a modified FFV 028 magnetic influence mine. The operational theory, circuit design, and operating instructions of this circuit are discussed

Dans ce document de référence, on décrit une puce avec minuterie intégrée 555 à DEL qui active le déclencheur d'une mine magnétique à influence modifiée FFV 028. On y aborde la théorie opérationnelle, la conception du circuit et le mode d'emploi.