INTERDISCIPLINARY STUDY

OF

TELECOMMUNICATIONS

"THE APPLICATION OF DYNAMIC MODELLING TO THE STUDY OF TELECOMMUNICATIONS DEVELOPMENT IN CANADA"

3rd Progress Report
1 April - 30 September, 1974

DSS/COMMUNICATIONS CANADA CONTRACT NO. OSU4-0076

P
91
C655
Q44
1974

QUEEN'S UNIVERSITY
KINGSTON, ONTARIO, CANADA

P
91
C655
Q44
1974

Contract No.: Department of Supply and Services, No. OSU4-0076
Dated: 30 May, 1974.
With: Queen's University,
Kingston, Ontario, Canada.
For: Communications Canada, Ottawa.

1. Queen's University (Kingston, Ont.). Interdisciplinary Study of Telecommunications

Project Title:

2. "The Application of Dynamic Modelling to the Study of Telecommunications Development in Canada".

3rd PROGRESS REPORT

Period Covered: 1 April - 30 September, 1974.

Submitted to Communications Canada, Ottawa on 1 November, 1974.

COMMUNICATIONS CANADA
AUG 24 1989
LIBRARY – BIBLIOTHÈQUE

Co-Investigators:

J.C. Beal (Electrical Engineering - Coordinator), J.W. Berry (Psychology), F. Cooke (Biology), C.E.S. Franks (Political Studies), R. Harmsen (Biology), K.A. Herman (Sociology), J.G.M. McKirdy (School of Business), L.E. Peppard (Electrical Engineering).

P
91
C655
Q44
1974

DD 1435313
DL 4082419

Contrat No.: Approvisionnements et Services Canada OSU4-0076.
Daté du: le 30 mai 1974.
Passé avec: Queen's University, Kingston, Ontario, Canada.
Pour: Communications Canada, Ottawa.

Titre du projet:

"L'application du modelage dynamique à l'étude du développement des télécommunications au Canada"

3ème RAPPORT D'AVANCEMENT DES TRAVAUX

du 1er avril au 30 septembre 1974

Soumis à Communications Canada, Ottawa, le 1 novembre, 1974

Chercheurs:

J.C. Beal (Electrical Engineering - Coordinator), J.W. Berry (Psychology), R. Cooke (Biology), C.E.S. Franks (Political Studies), R. Harmsen (Biology), K.A. Herman (Sociology), J.G.M. McKirdy (School of Business), L.E. Peppard (Electrical Engineering).

SOMMAIRE

Ce troisième Rapport sur les Progrès des Travaux en Cours couvre la période du 1er avril au 30 septembre 1974, suivant le Contrat no. OSU4-0076 passé entre l'Université Queen's et le Ministère des Approvisionnements et Services/Communications Canada. Les travaux sont effectués par une équipe multidisciplinaire dont les membres appartiennent à six disciplines, et ont pour but d'étudier la possibilité d'utiliser un modèle dynamique comme instrument dans l'évaluation de l'impact des télécommunications sur une région ou une communauté.

Ce rapport présente la forme à peu près définitive du modèle régional du nord-ouest de l'Ontario et son adaptation à un terminal interactif dont l'utilisation ne nécessite pas de connaissances spécialisées en ordination.

Le rapport présente également une description détaillée de la structure d'un modèle envisagé pour la communauté d'Aroland, Ontario, basé sur les travaux extensifs qui ont été faits sur place en 1973. En outre, on trouvera dans ce rapport un résumé des investigations sociologiques et psychologiques faites à Sioux Lookout, Ontario, en 1974. On espère construire et expérimenter un modèle pour la communauté de Sioux Lookout avant la fin de l'année contractuelle.

SUMMARY

This third Progress Report covers the work done during the period 1 April - 30 September, 1974 on Contract No. OSU4-0076 between Queen's University and D.S.S./Communications Canada. The work is being conducted by a multidisciplinary team from six disciplines and is aimed at a study of the feasibility of dynamic modelling as a possible tool in the evaluation of the impact of telecommunications on a region or community.

This report presents the essentially final form of the regional model of northwest Ontario and its adaptation to an interactive terminal for use by persons having no specialized knowledge of computing.

A detailed discussion is also given on the structure of a possible community model of Aroland, Ontario, based on the extensive field work conducted there in 1973. In addition, a summary is included of the sociological and psychological field investigations of Sioux Lookout, Ontario, in 1974. It is hoped to build and test a community model of Sioux Lookout during the remainder of this contractual year.

TABLE OF CONTENTS

		Page
	Sommaire	
	Summary	1
	Table of Contents	2
1.	Introduction.	3
2.	Northwest Ontario Regional Model.	5
3.	A Dynamic Model Structure for the Community of Aroland.	19
4.	Sioux Lookout: Sociological Aspects.	46
5.	Sioux Lookout: Psychological Aspects.	49
6.	Further Work Planned for 1974-75.	55
A.1	Appendix - Personnel Involved in the Project.	56
A.2	Appendix - Project Reports and Working Papers.	58
A.3	Appendix - Published Papers Arising from this Work.	60

1. INTRODUCTION

1.1 Background

This report is the fifth in a series produced at intervals of six months covering the work done since July 1972, by a multidisciplinary team under the sponsorship of Communications Canada, with an object defined as:

> "To develop detailed dynamic models for use as means of evaluating the impact of telecommunications on developing areas in Canada."

It should be emphasized at the start that this project is experimental, being aimed at a study of the feasibility of developing and using dynamic models. The potential and limitations of these models are themselves in process of investigation and the final results of this study, when completed in 1975, should enable a fair judgement to be made on their possible use in the planning of telecommunication systems and in other socio-economic studies.

This particular report summarizes the work of the first six months of the third contractual year (1974-75).

1.2 Contents of this Report

The regional model of northwest Ontario is now considered to be complete and its essentially final form is discussed in section 2 of this report, together with a description of its use in an interactive setting. A special interactive terminal has been developed to enable the model to be used by people having no specialized knowledge of computing. By means of this terminal, a sensitivity analysis as well as more general critical reviews of the model's potential and limitations are now being performed from several different disciplinary viewpoints. While these analyses, which form the process of "verification", may lead to some minor modifications of the regional model, it is not anticipated that any further major changes will be made in its structure, within the financial and temporal limits imposed on this study. Clearly, this should not be taken to imply that the present regional model is considered to be perfect; rather is its present form thought to represent a reasonable compromise between a crude model having little or no practical use and a model in a state of indefinitely extended refinement that also would be of little use until finally "finished". The regional model in its current form as

described here is thought to provide a useful basis for a detailed discussion of the feasibility of dynamic modelling in the planning of socioeconomic services for a region of typical size within a large country. Such a detailed discussion will appear in a later report.

A major part of this report is that in section 3 describing a dynamic model structure for Aroland, which is a small Indian community of about 270 persons, located within the region of northwest Ontario. It was extensively surveyed during the field work conducted in 1973 and the model structure discussed here is based directly on a multi-disciplinary analysis of the information gained in that field work. It is not intended at this time actually to program this model on the computer. Instead, the experience gained in the development of a model structure for this community is now being adapted to the case of Sioux Lookout, within the limits imposed by the large differences in the size and type of population. Sioux Lookout is a community of considerable importance as a service centre for a substantial part of the region of northwest Ontario and it is planned over the next few months to develop a detailed dynamic model of this community. This model will then be investigated and analyzed in depth by means of the same interactive computer terminal mentioned above.

Sections 4 and 5 summarize the sociological and psychological field work conducted in Sioux Lookout. The sociological work, in particular, will be discussed in much greater detail in a subsequent report, while both these major aspects of the study, as well as others, will be reviewed in a final report to be prepared in 1975.

The work planned for the remainder of 1974-75 is outlined in section 6. It is appropriate also to note that a relatively small further proposal has been submitted to Communications Canada to enable the entire three-year study to be concluded satisfactorily in the early part of 1975-76, with a strong emphasis on the transfer to the staff of Communications Canada of the knowledge and experience gained by the multidisciplinary team of investigators at Queen's University. It is planned to make several videotaped demonstration/lectures on the entire project and to adapt the computer programs for direct use on the computer terminals available in Ottawa.

2. NORTHWEST ONTARIO REGIONAL MODEL

2.1 Introduction

During the last six months, the regional model has been completed with the incorporation of the following changes:

(i) Addition of a forest resources sector.

(ii) Restructuring of the economic sector of the model.

(iii) Expansion of the media and communications sectors of the model.

Verification of the model and its structure is a continuing process: alterations will subsequently be made where deemed necessary. However, it is unlikely that such changes will extend to major revisions of the actual structure of the model. This has been analyzed for quite some time, so that modifications will centre around functional relationships and definitions of individual parameters.

Sensitivity analysis of the functional relationships and relevent parameters is to be carried on during the final months of this contract period, both as a part of the verification process and as an exploration of the model behaviour.

As well as being updated in accordance with alterations of the model, the model computer programs have been modified for execution on a PDP15 minicomputer. With the more flexible hardware of the minicomputer available, the program system was further modified to facilitate interactive use of the model by persons with no prior experience in computing.

It may be fairly claimed that the model is now a functional tool. Evaluation of the utility of this tool must now be carried out.

2.2 Review of the Model

The regional model (see Figure 1)* currently consists of ten sectors:

(i) Natural Resources
(ii) Forest Resources
(iii) Economy
(iv) Communications
(v) Transportation
(vi) Media

---

*Figure 1 is included in the pocket at the end of this report. A list of relevant abbreviations is included at the end of Section 2.

(vii) Demography
(viii) Education
(ix) Health Services
(x) Tourism (including environmental quality)

These sectors are, in effect, submodels, and are linked together to create the overall model. In the following portions of this section, the most recent changes are presented. While these are discussed in terms of sectors, their relationship to the rest of the model has also been considered during the updating.

a) Forest Resources Sector

Timber comprises a significant renewable resource for the Northwest Ontario region and hence cannot be ignored, particularly in view of its increasing value in the world commodities market. A submodel to represent this industry has been discussed in previous reports and was introduced during the latest period. In Figure 2 the structure is presented graphically.

This submodel is built around two levels - Forest Technology Used (L51) and Regional Forest Resources (L50). Forest technology may be measured in dollar investment in technology per man year, while resources may be measured in acres of forest tract mature enough for harvesting.

Forest Technology Used is increased by R53, which depends on the Forest Technology Available (exogenous variable EV52) and the World Price for Forest Resources (variable V53).

The level of Regional Forest Resources is increased by R50 - the regenerative growth rate of timber, and decreased by two rates, R51 and R52. R52 is the reduction due to harvesting, which is modified by the Demand for Forest Resources (V54). Rate R51 is the reduction caused by environmental degradation (through a link with the Pollution Level L500) and fire (through the Fire Rate V51). The Fire Rate is dependent on Total Population (V101) and Tourism (L350). R51 also depends on Total Telephone Density (V200), since better communications potentially facilitates effective forest management.

Some other variables are used as intermediate parameters in developing the variables mentioned above. The Regional Cost of Forest Resources (V52) is determined by the Wage Rate Offered (V303) and the Forest Technology Used (L51), as well as the Subsidy to Forestry (V52). The Regional Cost together with the World Price for Forest Resources (EV50) then determines the World Price for Regional Forest Resources (V53). Finally, the Demand for Regional Forest Resources (V54) is computed from the World Price for Regional Forest Resources.

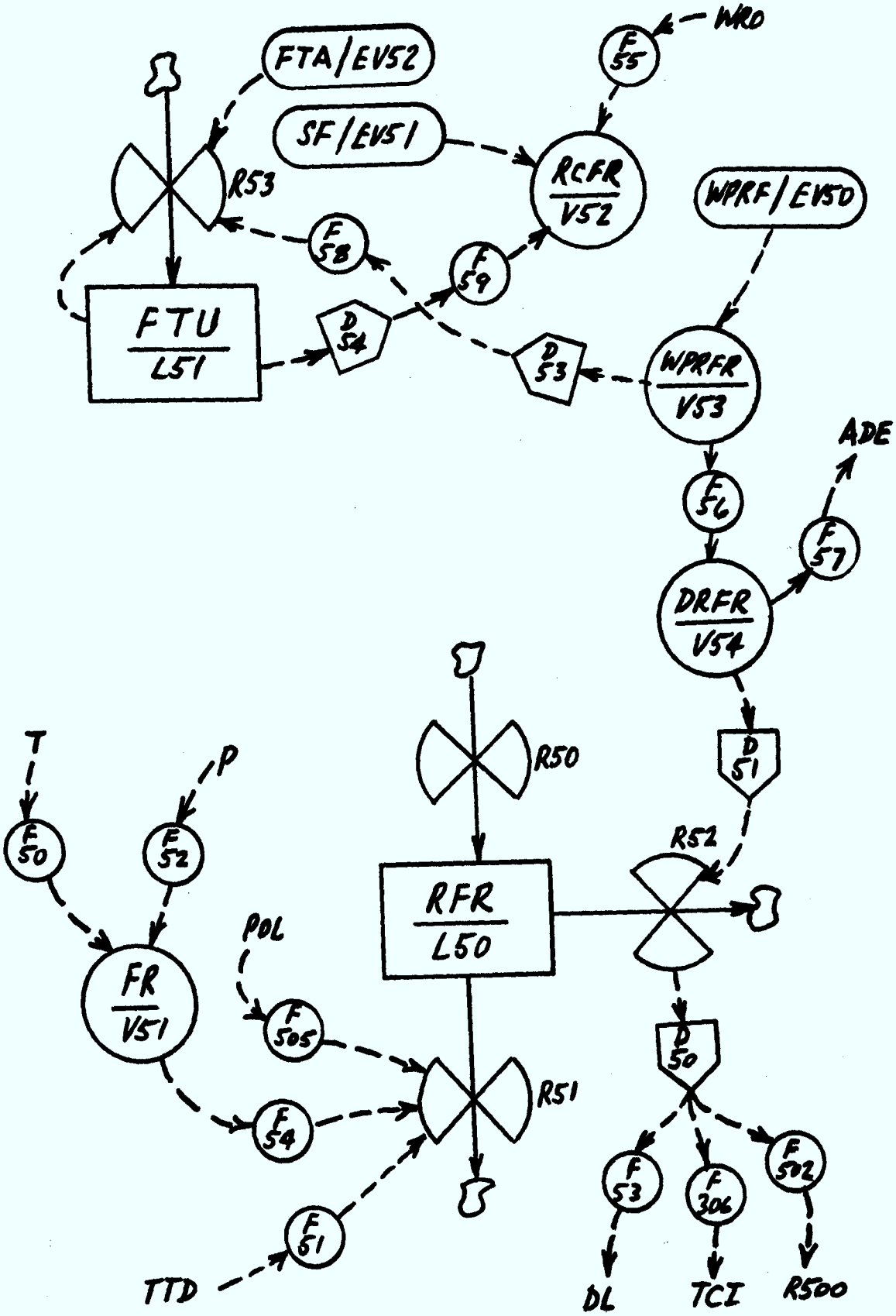
WRD
F 55
FTA/EV52
SF/EV51
RCFR
V52
R53
WPRF/EV50
F 58
F 59
FTU
L51
D 54
D 53
WPRFR
V53
ADE
F 56
F 57
DRFR
V54
R50
D 51
T
P
F 50
F 52
R52
RFR
L50
POL
FR
V51
F 505
D 50
R51
F 54
F 53
F 306
F 502
F 51
TTD
DL
TCI
R500

FIGURE 2.

Links also exist from the forestry submodel to other areas of the aggregate model. The rate of decrease of timber by harvesting (R52) affects the rate of increase of environmental degradation (R500), the Demand for Labour (V300), and Total Capital Investment (V301). The Demand for Forest Resources (V54) modifies the actual demand variable (V6).

Sample plots from the forest resources sector are shown in Figure 3. Run 1 was made with all exogenous inputs set constant, while Run 2 was made with all inputs increasing at 2% per annum.

In the first case, forest resources decline by about 10% over thirty years, with forest technology used increasing only marginally. In the second case, with a subsidy to forestry,increasing technology available, and increasing world price affecting the region, forest resources are reduced by a further 5% and technology used rises considerably - by 30%.

b) Economy Sector

With the introduction of the forest resources submodel, the major economic activities specific to the region were all dealt with individually - forestry, mining and tourism being represented in separate submodels. A modification was therefore necessary in the economics submodel, to account for these representations and to reflect more precisely the remaining areas of economic activity. The structure shown in Figure 4 was finally adopted.

One level was used - income from Other Industries and Services (L300) and it is increased by the rate R300. R300 depends on Regional Disposable Income (V306), Population (V100), Radio Penetration (V220), Television Penetration (V221), Newspaper Penetration (V222), Total Telephone Traffic (V207) and the exogenous input Subsidy to Other Industries and Services (EV300).

Total Capital Investment (V301) is determined by Other Industries and Services (L300), the rate of harvesting of forest resources (R52), the rate of development of regional natural resources (R2), and the number of Tourist Days per Year. Thus, it is a measure of overall economic activity.

The Demand for Labour (V300) depends on Total Capital Investment (V301), as well as Tourism (tourist-days per year) (L350), Mining Technology Used (L3), Forest Technology Used (L51), the rate of decrease of Regional Natural Resources (R2), and the rate of harvesting of Forest Resources (R52).

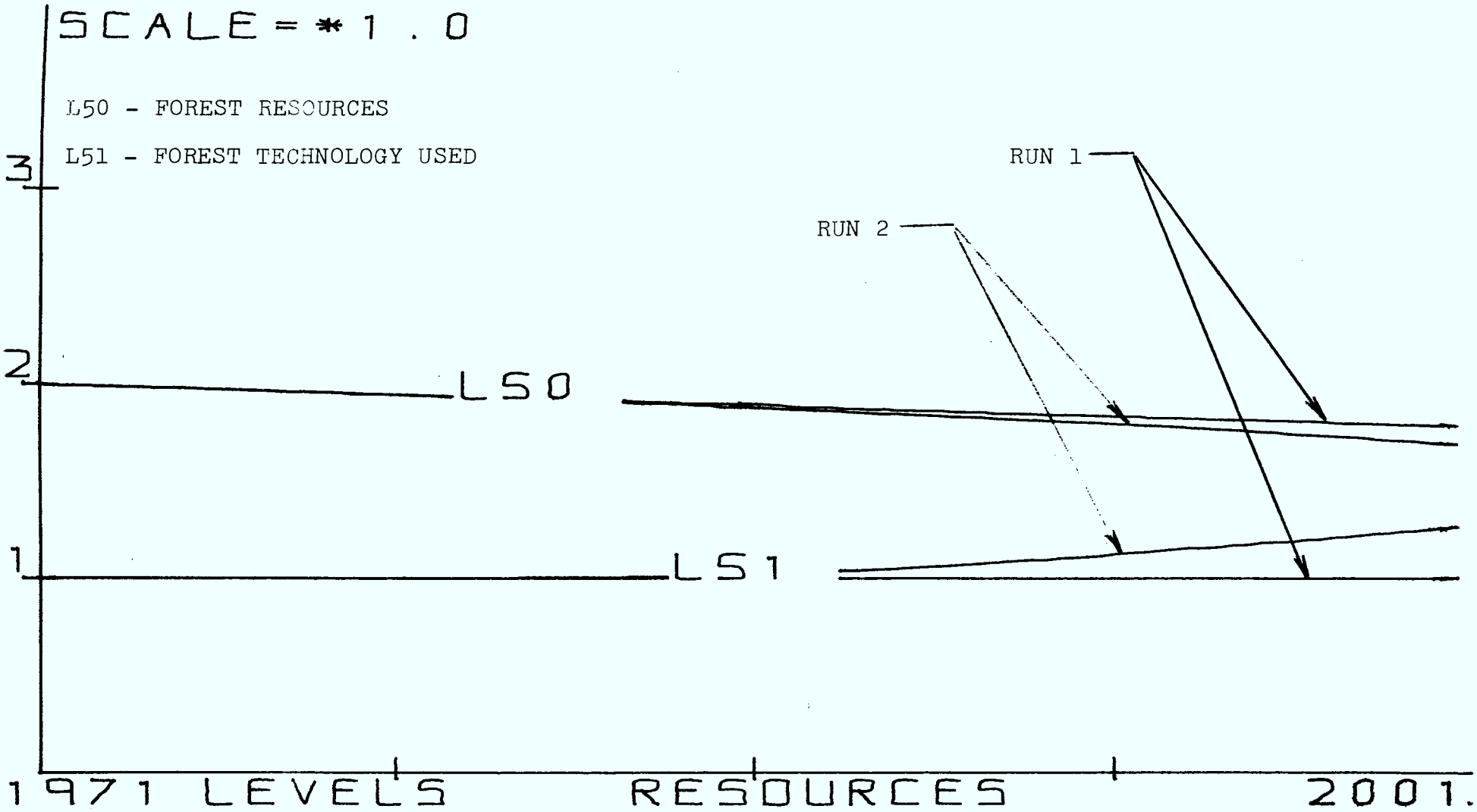
SCALE=*1.0
L50 - FOREST RESOURCES
L51 - FOREST TECHNOLOGY USED
3
2
1
RUN 1
RUN 2
L50
L51
1971 LEVELS
RESOURCES
2001.

FIGURE 3.

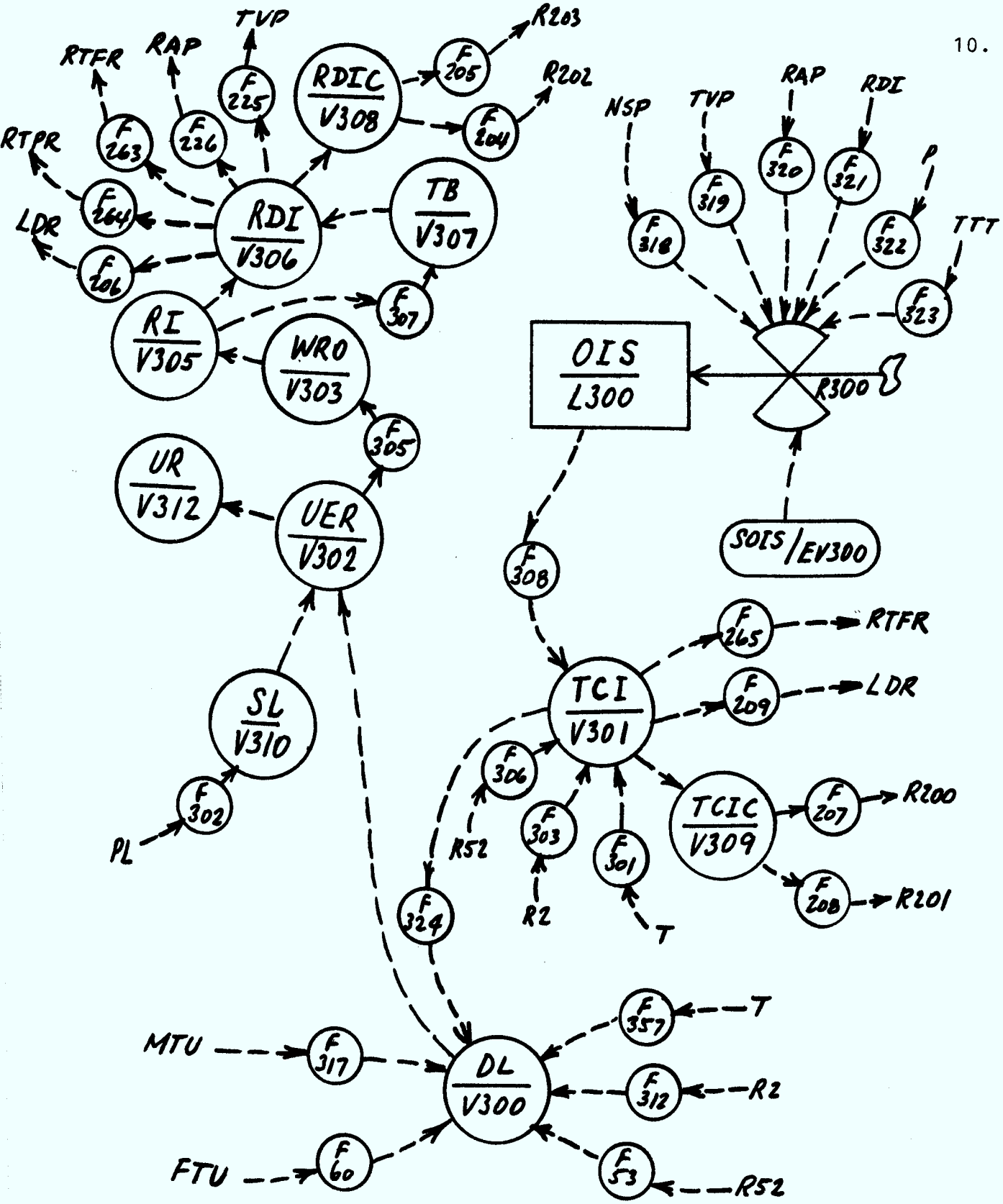
TVP
RTFR
RAP
RTPR
LDR
F 225
F 263
F 226
F 264
F 206
RDIC
V308
F 205
F 204
R203
R202
RDI
V306
TB
V307
F 307
RI
V305
WRO
V303
F 305
UR
V312
UER
V302
SL
V310
F 302
PL
NSP
TVP
RAP
RDI
P
TTT
F 318
F 319
F 320
F 321
F 322
F 323
OIS
L300
R300
SOIS/EV300
F 308
TCI
V301
F 265
RTFR
F 209
LDR
F 306
R52
F 303
R2
F 301
T
TCIC
V309
F 207
R200
F 208
R201
F 324
MTU
F 317
FTU
F 60
DL
V300
F 357
T
F 312
R2
F 53
R52

FIGURE 4.

The Supply of Labour (V310) depends on the working age population (V102). The demand and supply variables are used to generate the Unemployment Ratio (V302), which in turn is used to generate the Wage Rate Offered (V303). Regional Income (V305) is based on the Wage Rate Offered and the Demand for Labour, and from it is derived the Tax Bill. The Regional Disposable Income can then be calculated from the Tax Bill and the Regional Income.

Regional Disposable Income affects many variables: Television Penetration (V221), Radio Penetration (V222), Road Traffic Passenger Ratio (V253), Road Traffic Freight Ratio (V252) and the Long Distance Calling Rate (V205). It also determines the Regional Disposable Income Change (V308), which affects the rates of increase and decrease of Residential Telephone Density (R202 and R203 respectively).

Returning to Total Capital Investment (R301), it can be seen that this determines the Total Capital Investment Change, which acts on the rates of increase and decrease of the Business Telephone Density Ratio (R200 and R201 respectively).

Another variable is the actual Unemployment Rate (V312), found by complementing the Unemployment Ratio.

Among the out-flowing links from Total Capital Investment are those to the Road Traffic Freight Ratio (V205) and the Long Distance Calling Rate (V205). Note that LDR is actually the frequency of calls, not the charge. From the Wage Rate Offered (V303), links go to the Cost Ratio for Resource Extraction (V3), and Migration Rates (R104 and R107).

c) Expansion of the Media and Communications Sectors

Since the regional model was constructed to view Northwest Ontario in the light of communications impact, it was deemed necessary to re-examine the channels available, and their links with the remainder of the model's parameters, in order to assess the need for an improved representation. Research was carried out to extract relationships applicable to the region from the communications literature*. Several new functions were added, and a few variables were modified as shown in Figures 5 and 6.

---

*See Research Report Q.23 for a complete discussion of communications literature.

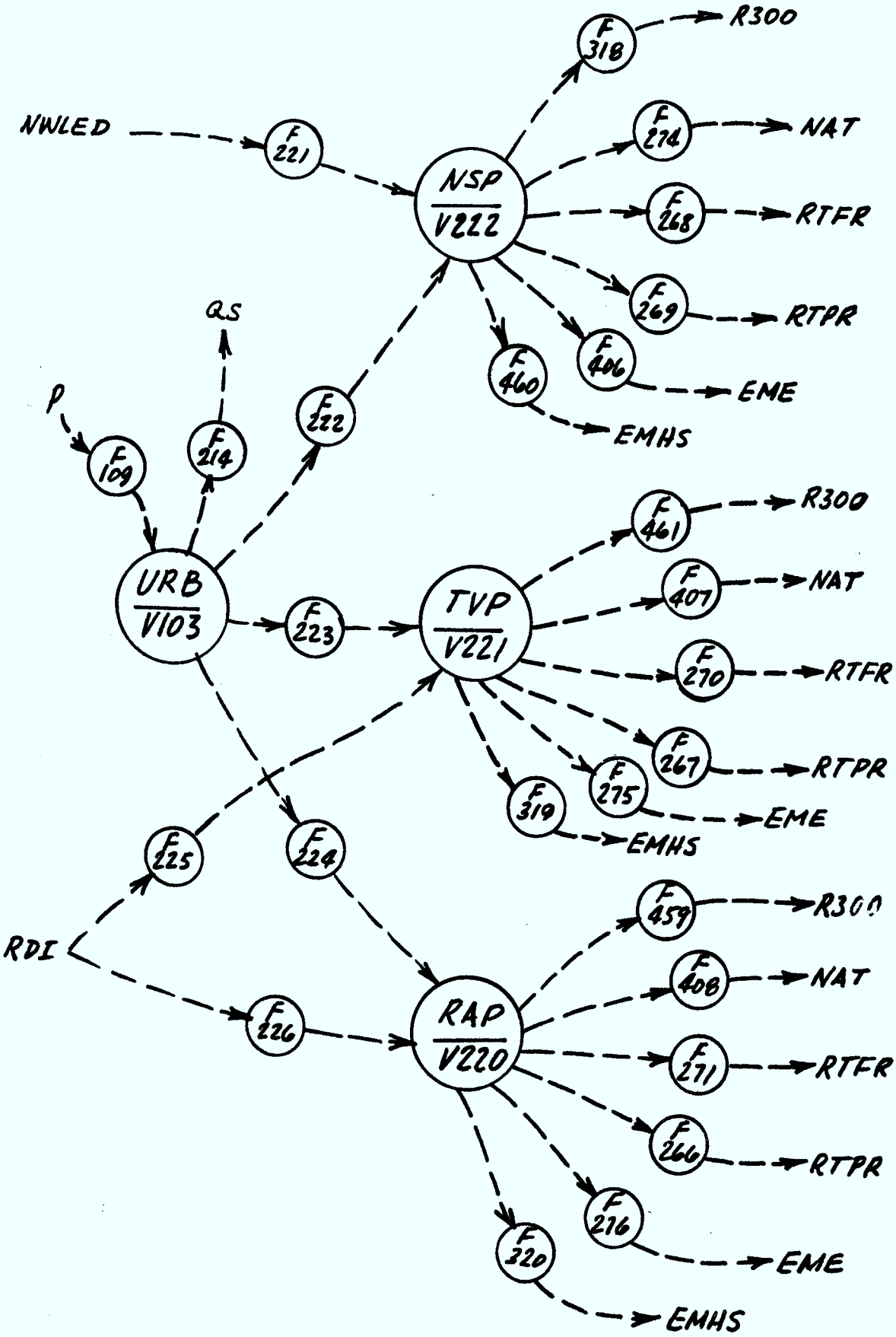
NWLED
F 221
NSP
V222
F 318
R300
F 274
NAT
F 268
RTFR
F 269
RTPR
F 406
EME
F 460
EMHS
QS
P
F 109
F 214
F 222
URB
V103
F 223
TVP
V221
F 461
R300
F 407
NAT
F 270
RTFR
F 267
RTPR
F 275
EME
F 319
EMHS
F 225
F 224
RDI
F 226
RAP
V220
F 459
R300
F 408
NAT
F 271
RTFR
F 266
RTPR
F 276
EME
F 320
EMHS

FIGURE 5.

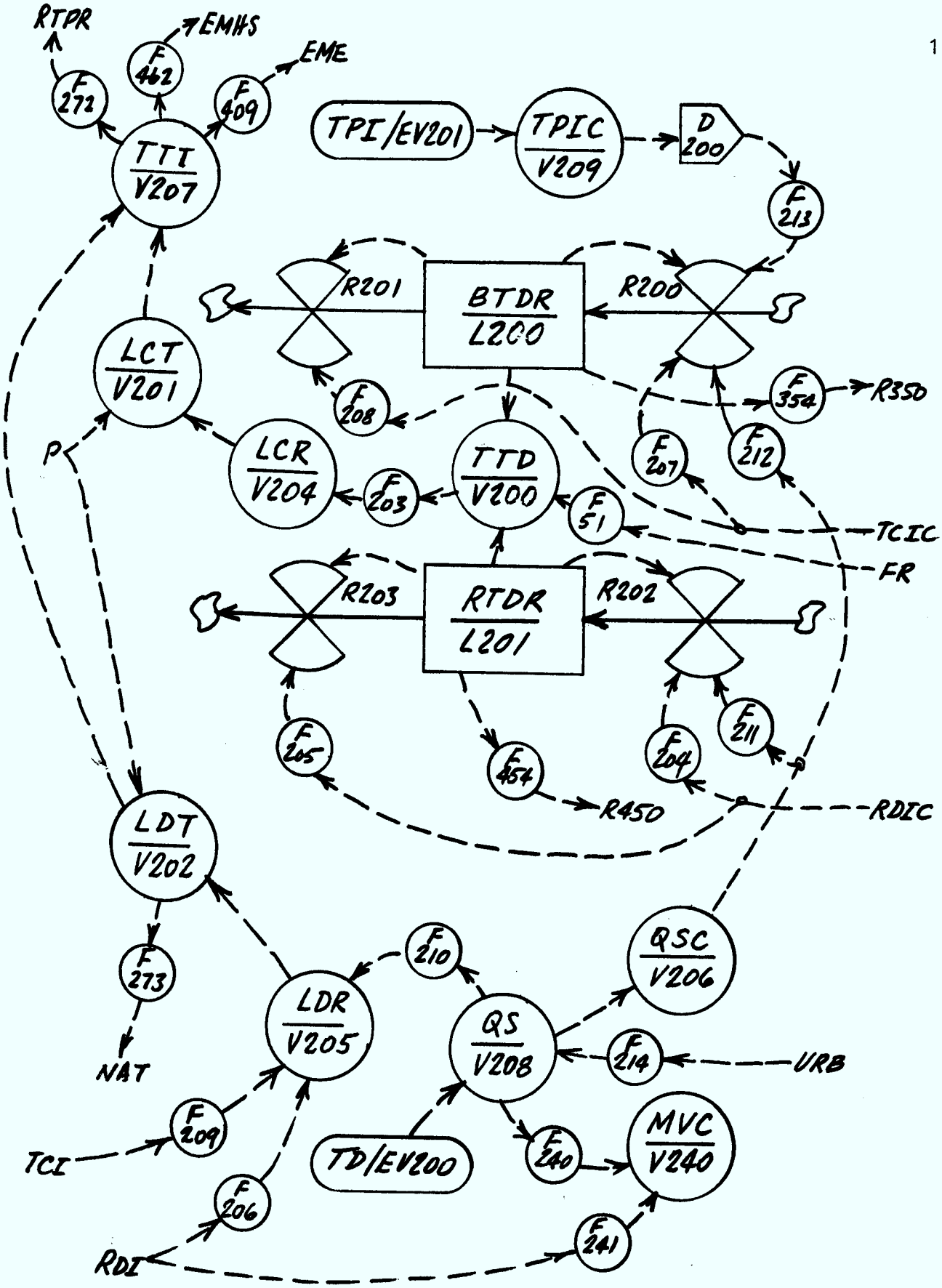
RTPR
EMHS
EME
F 272
F 462
F 409
TTT
V207
TPI/EV201
TPIC
V209
D 200
F 213
R201
BTDR
L200
R200
LCT
V201
F 208
F 354
R350
P
LCR
V204
F 203
TTD
V200
F 51
F 207
F 212
TCIC
FR
R203
RTDR
L201
R202
F 205
F 454
R450
F 204
F 211
RDIC
LDT
V202
F 273
NAT
F 210
QSC
V206
LDR
V205
QS
V208
F 214
URB
F 209
TCI
TD/EV200
F 240
MVC
V240
F 206
RDI
F 241

FIGURE 6.

Urbanization (V103) was changed from an exogenous to an ordinary variable, now a function of population (V101). Quality of Service (V208) was similarly changed to an ordinary variable, modified by Urbanization, and Telephone Technology Development (EV200), a new exogenous variable. A new variable, Total Telephone Traffic (V207), replaces the Communications Interaction Index as a more concrete parameter.

To avoid tedious listing and duplication of already mentioned links, only those which have not been outlined in the two preceding subsections will be noted. Links were added between each of the media variables (Newspaper Penetration (V222), Television Penetration (V221), and Radio Penetration (V220)) and each of the transportation variables (Northern Air Traffic (V251), Road Traffic Freight Ratio (V252), and Road Traffic Passenger Ratio (V253)), as well as from these same media variables to the Expectation Multipliers for Health Services (V452) and for Education (V402).

With these links established, it will be possible to examine the results of varying the functional relationships comprising the links. (Current theory is not yet decided as to whether the relationships in most areas are complementary or substitutional).

2.3 Interactive Version of the Model Program

Originally, the model was programmed to be run on a Burroughs 6700 computer at the Queen's University Computing Centre. This is a full size computer processing many jobs sequentially. For the regional model program, the category assigned limited the number of executions to a few per day. These conditions made a concentrated study of model behaviour most difficult and it was decided to modify the program to run on the DEC PDP15 minicomputer belonging to the Electrical Engineering Department (Figure 7). Subsequently, alterations were made to take advantage of the more flexible input and output facilities available with that machine.

The model can now be operated interactively, with exogenous variable values set by the user during execution and with chosen parameters plotted on a television screen as they are calculated (i.e. a real time display). Such a plot can be completed in approximately twenty seconds, making it possible to perform numerous experiments during a single session with the computer. All of the levels and variables may be traced by selection; plots may also be reproduced on paper upon request. A control box, (Figure 8) was developed and constructed, which permits non-programmers to make full use of the model without technically imposed encumbrances. In fact, interaction can take place from remote locations on campus which have a linking connection with the computer room. Thus, one need not even approach the computer to use the model.

FIGURE 7.

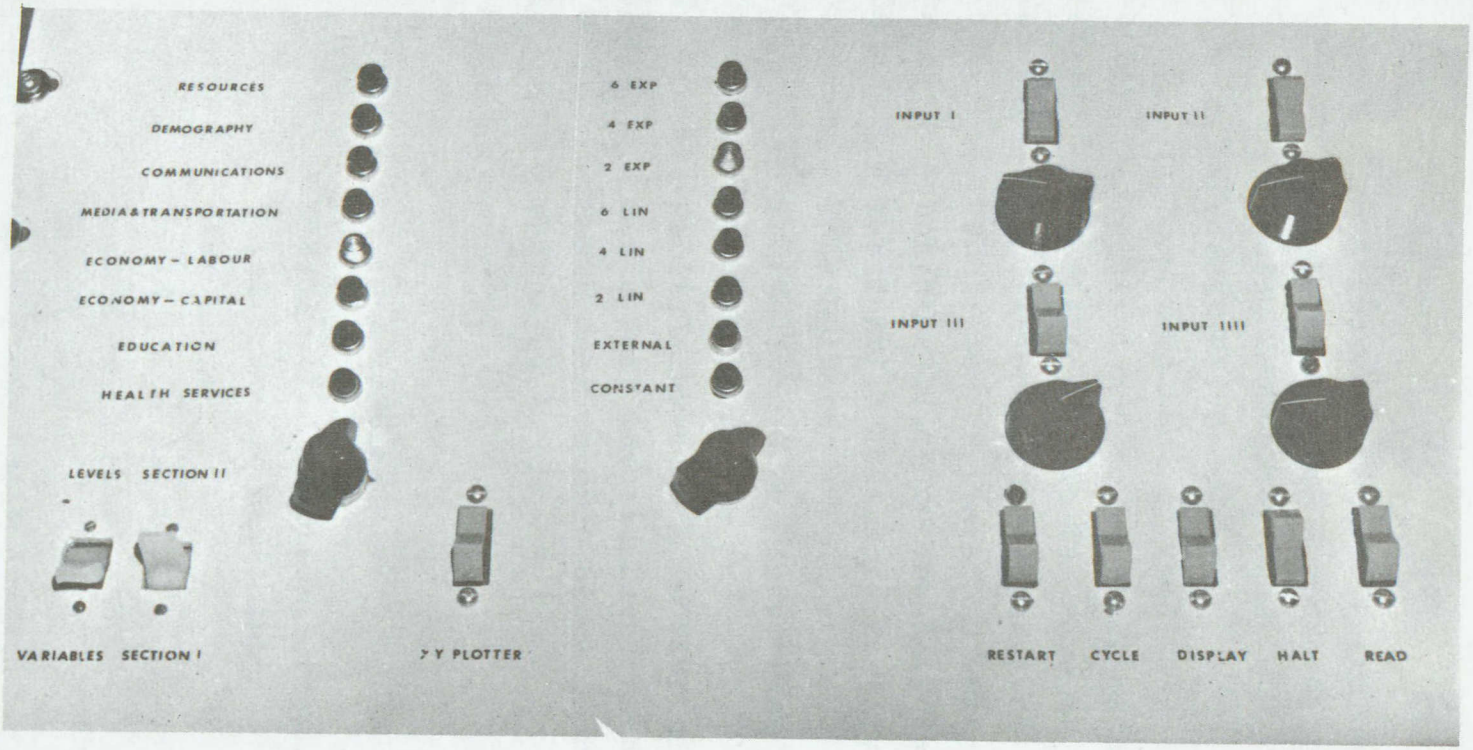
RESOURCES
DEMOGRAPHY
COMMUNICATIONS
MEDIA & TRANSPORTATION
ECONOMY – LABOUR
ECONOMY – CAPITAL
EDUCATION
HEALTH SERVICES
LEVELS SECTION II
VARIABLES SECTION I
6 EXP
4 EXP
2 EXP
6 LIN
4 LIN
2 LIN
EXTERNAL
CONSTANT
X Y PLOTTER
INPUT I
INPUT II
INPUT III
INPUT IIII
RESTART
CYCLE
DISPLAY
HALT
READ

FIGURE 8.

LIST OF ABBREVIATIONS USED IN REGIONAL MODEL

LEVELS

LI - UDNR	- Undiscovered Natural Resources
L2 - RNR	- Regional Natural Resources
L3 - MTU	- Mining Technology Used
L50 - F	- Forest Resources
L51 - FTU	- Forest Technology Used
L100 - P1(0-14)	- Population 0 to 14 years of age
L101 - P2(15-44)	- Population 15 to 44 years of age
L102 - P3(45-64)	- Population 45 to 64 years of age
L103 - P4(65-)	- Population 65 years and over
L200 - BTDR	- Business Telephone Density Ratio
L201 - RTDR	- Residential Telephone Density Ratio
L250 - RN	- Road Network
L300 - OIS	- Income from Other Industries and Services
L350 - T	- Tourist days/year
L351 - CIT	- Capital Investment in Tourism
L400 - NWLED	- North West Ontario Level of Education
L450 - NWLHS	- North West Ontario Level of Health Services
L500 - POL	- Pollution

Variables

V1 - UDFR	- Undiscovered Fraction Remaining
V2 - TFR	- Total Fraction Remaining
V3 - CR	- Cost Ratio
V4 - WPR	- World Price Ratio
V5 - DE	- Demand for mineral resources
V6 - ADE	- Actual Demand
V7 - WPRI	- World Price Ratio Index
V51 - FR	- Fire Rate
V52 - RCF	- Regional Cost for Forest resources
V53 - WPRF	- World Price for Regional Forest resources

V54 - DEF - Demand for regional Forest Resources

V100 - FER - Fertility Rate
V101 - P - Total Population
V102 - PL - Population of Labour age
V103 - URB - Urbanization

V200 - TTD - Total Telephone Density
V201 - LCT - Local Call Total
V202 - LDT - Long Distance call Total
V204 - LCR - Local Calling Rate
V205 - LDR - Long Distance calling Rate
V206 - QSC - Quality of Service Change
V207 - TTT - Total Telephone Traffic
V208 - QS - Quality of Service
V209 - TPIC - Telephone Progress Index Change
V220 - RAP - Radio Penetration
V221 - TVP - Television Penetration
V222 - NSP - Newspaper Penetration
V240 - MVC - Mail Volume per Capita
V250 - RCE - Road Construction Expenditure
V251 - NAT - Northern Air Traffic
V252 - RTFR - Road Traffic Freight Ratio
V253 - RTPR - Road Traffic Passenger Ratio
V254 - RT - Total Road Traffic

V300 - DL - Demand for Labour
V301 - TCI - Total Capital Investment
V302 - UER - Unemployment Ratio
V303 - WRO - Wage Rate Offered
V305 - RI - Regional Income
V306 - RDI - Regional Disposable Income
V307 - TB - Tax Bill
V308 - RDIC - Regional Disposable Income Change
V309 - TCIC - Total Capital Investment Change
V310 - SL - Supply of Labour

3. A DYNAMIC MODEL STRUCTURE FOR THE COMMUNITY OF AROLAND

3.1 Introduction

Development of the structure for a dynamic model of the socioeconomic features of Aroland represents the first step towards applying dynamic modelling techniques to the study of community communications. The purpose of this report is to describe the model in light of the information about the community obtained as a result of fieldwork carried out during the summer of 1973.

To date, three communities in northwest Ontario have been the subjects of psychological and sociological studies designed to net information and data relating to the role played by telecommunications in the dynamics of the communities. The two Ojibway communities of Longlake 58 (Reserve) and Aroland were studied during the summer of 1973 and the predominantly Euro-Canadian community of Sioux Lookout was studied during the summer of 1974. Detailed reports on the methodologies and findings of these studies are available as separate research reports as well as part of the various progress and annual reports on the overall project.

Research report Q.16, "The Social Model: Report of Field work" by Gail Weinreb and Kathleen Herman and Section 3 of the Second Progress Report, relating to the results of psychological studies, represent the documented results of the field studies used in developing the model to be discussed here.

Due to a number of factors outlined in report Q.16, it was felt that from a sociological viewpoint, the Aroland study was more complete and hence authentic than that of Longlake 58. For this reason, it was decided to concentrate on the village of Aroland for the purposes of model building.

3.2 The Modelling Techniques

From the beginning it was evident that a great deal of information concerning Aroland had been obtained as a result of the fieldwork but that due to the nature of the community and the lack of quantitative data it would not be profitable to develop a working computer simulation model at this time. Rather, a structure showing possible relationships between salient characteristics of the social and economic system would be developed which would clearly indicate roles played by telecommunications.

The reader is referred to research report Q.2 for a

complete description of system dynamics modelling concepts. A brief description relevant to the Aroland model will be given here. Generally, three types of variables are needed to describe the characteristics of the socioeconomic system: levels, rates and ratios. The latter are termed "auxiliary variables" in the usual description of system dynamics techniques; the usefulness of the term "ratio" will become evident.

Levels are those variables chosen to represent the accumulation of some quantity or chacteristic in the system with the passage of time. These variables can either increase or decrease with time depending on the factors which influence their "rate of change". Thus, the second type of variable, the rate, is used to describe how quickly a level is changing. If a level is increasing, its rate of change will be positive and if decreasing, negative. In some cases it is useful to separate the positive and negative rate components into two separate rates (such as birth rate and death rate in the case of the level of population).

Symbolically, a level and its associated rate of change are represented as shown in Figure 9.

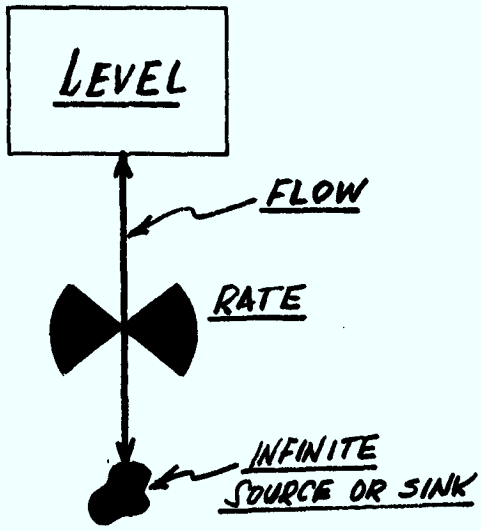

FIGURE 9.

The rates of change for various levels in the model are not in general constant but change with time depending on the relative values of other levels in the system. Ideally, if we define enough levels, and if our knowledge of the real system is complete, any rate can be determined as a function of other levels. In practice, to more clearly outline the nature of the effect of a particular

level on the rate of change of a particular rate, it is necessary to define a number of intermediate variables which we will term ratios since they are either ratios of some level to a reference value, the ratio of two levels or some function of several levels. Usually they are normalized themselves with respect to a reference value such as that observed in the present year. Ratios are diagrammed as circles with information necessary for their determination shown as dotted lines. Thus the information flows serve to interconnect levels, ratios and rates so as to describe a model structure. The application of the three types of variables will become clear as they are used to describe the structure of the Aroland community.

3.3 Description of the Model

While an overall diagram of the model is included in Figure 10*, smaller segments will be referred to for the sake of clarity. In all cases, an attempt will be made to relate the assumptions made regarding the model to the findings of the field studies. For each component of the model, the detailed description of the system will be followed by a concise summary in order to provide the casual reader with an overview of the model without unwanted detail.

Let us first consider the economy of the village or, more specifically, the sources of income of the people since this is the most important indicator of the economy from the human viewpoint. Like most of northwest Ontario, the economic base for the region around Aroland is the development of natural resources. In the case of Aroland, the primary resource is timber and the economic activity is that of wood cutting in which 24 men are employed by Kimberly-Clark. This represents about three-quarters of the male-employable population. The remainder are employed on a seasonal basis by the provincial Department of Natural Resources engaged in fire fighting and park maintenance which taken together can be termed resource management. Although these two types of employment represent the chief sources of wage income for the male employable population, it is important to consider other activities which take place especially in relation to the seasonal workers. "Special projects" which contribute directly to wage income have in the past included winter LIP grants and summer OFY grants for projects of community interest (such as repair work). The latter type of grant is essential in providing wage employment for young people in the village which effectively supplements their parents' income. Generally, employment for women is limited due to lack of transportation to centres where jobs are available. It is felt that unless jobs for women are available in the village itself, few will be employed.

---

*Figure 10 is included in the pocket at the end of this report.

For modelling purposes, we will consider resource development, resource management and special projects to be the three sources of wage income at present and in the forseeable future. Additional resource-related activities such as mining or sawmill operations can be included in the resource development category. An additional income source which is also of cultural significance is that derived from hunting and trapping. In the case of trapping, the income is directly added to that derived from wage employment. Prices vary with demand and have recently been considered good (a beaver pelt bringing as much as $40.00). Trapping also provides a source of recreation for the entire family, even at the expense of several weeks absence from school.

Like trapping, hunting and fishing provide recreation, excitement and a source of satisfaction as well as contributing indirectly to income through supplementation of food supply. Also associated with hunting, trapping and fishing is the occupation of guiding which has not been a major one for Arolanders in the past.

Figure 11 shows the structure for the economic component of the Aroland model. The four levels chosen to represent non-traditional economic activity are available natural resources (ANR), investment in resource development (IRD), investment in resource management (IRM) and investment in special projects (ISP). As mentioned previously "resources" are taken to be primarily timber at the present time, but could include minerals in the future. The rates of investment in resource development (harvesting), resource management (reforestation) and in special projects are all taken to be functions of exogenous decisions. The level of investment in resource management governs the rate of reforestation (RR). Since part of the investment in resource development will be in the form of capital equipment, a depreciation rate (DEPR) is included.

The usage rate of resources is then a function of investment and the resource availability. It is felt that if timber cutting and loading operations could not be carried out near Aroland due to resource depletion, these would cease to be major occupations for Arolanders.

Employment opportunities then arise from resource development (RDEO), resource management (RMEO) and special projects (SPEO). An exogenous factor affecting the former category is that of resource technology (RT) (for example, the use of machinery for timber cutting and loading) which will affect the resource usage rate (UR) as well as the jobs available. Total wage employment opportunities are represented by the variable TWEO.

'Employment' in traditional pursuits (trapping,

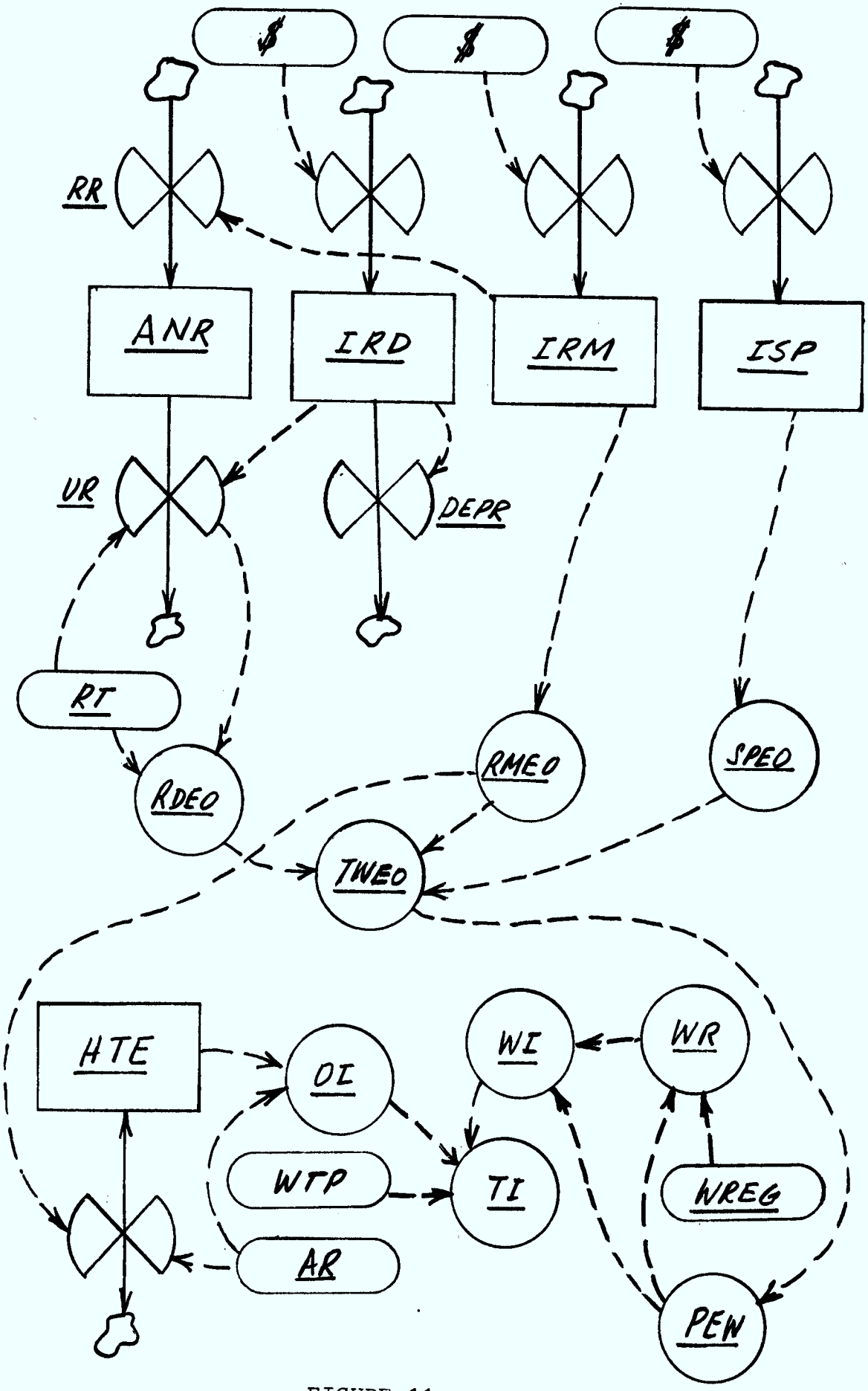
$
$
$
RR
ANR
IRD
IRM
ISP
UR
DEPR
RT
RDEO
RMEO
SPEO
TWEO
HTE
OI
WI
WR
WTP
TI
WREG
AR
PEW

FIGURE 11.

hunting and fishing) is represented by the level of "hunting and trapping effort" (HTE). Taking into account the available animal resource (AR), this effort determines the average amount of "other income" (OI) earned by Arolanders. Added to wage income (WI), and to income from welfare transfer payments (WTP), the total average income (TI) is obtained. Wage income is a function of the wage rate (WR) and the number of persons employed in wage positions (PEW). The average wage rate is taken to be an exogenous variable determined in part by regulations (WREG).

One of the economic factors affecting the rate of change in HTE is felt to be the number of forest management employment opportunities (RMEO) available since these tend to be of a seasonal (summer) nature and complement traditional (winter) pursuits.

Summary of Economic Component

Wage employment is seen to arise from jobs in resource development, resource management and special projects. The wage income is a function of the wage rate and the number of persons employed in wage positions. Other income is derived from traditional pursuits. Total income is the sum of wage income, other income and welfare transfer payments.

For convenience, the next component to be examined will be that concerning demography. Here we are concerned with population, births, deaths and migration. Figure 12 shows a somewhat simplified version of this component. The Aroland population is modelled in four age groups corresponding to 0-14 years, 15-44 years, 45-54 years and 55+ years. The second group (level P2) represents the fertile population while the last group (level P4) represents people not normally (i.e. in the past) part of the potential wage earner group (PWE). The youngest age group (P1) has associated with it four rates: the birth rate (BR), the death rate (DR1), the migration rate (MIGR1) and the ageing rate (number of 15 year-olds). With the exception of the birth rate, other levels are similarly modelled.

It was not possible to determine the exact present values for birth rate in Aroland but it is safe to say that it is higher than the provincial or national average and will probably continue to be so for some time (such was indicated by comments and opinions on desirable family size made by Arolanders). It was found, however, that the younger people were now questioning the value of large families, which in the past have been felt to be desirable (eight couples in the age bracket of 35-50 years have eight or more children).

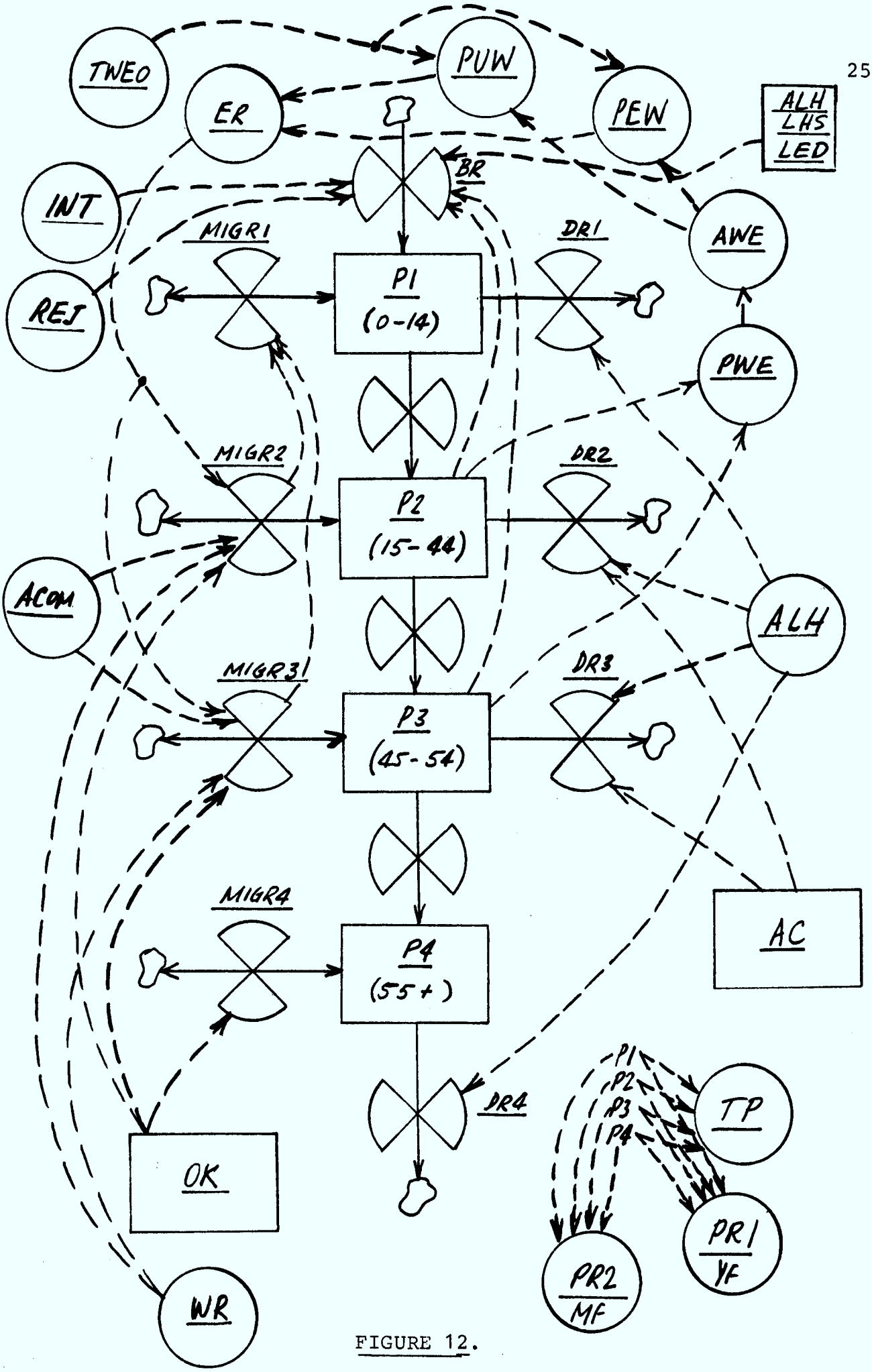
TWEO
PUW
ER
PEW
ALH
LHS
LED
BR
INT
AWE
MIGR1
DR1
P1
(0-14)
REJ
PWE
MIGR2
DR2
P2
(15-44)
ACOM
ALH
MIGR31
DR3
P3
(45-54)
MIGR4
AC
P4
(55+)
DR4
P1
P2
P3
P4
TP
OK
PR1
YF
PR2
MF
WR

FIGURE 12.

As can be seen from Figure 12, factors affecting the present birth rate were chosen to be the average level of health of the population (ALH-measured by incidence of health problems), the level of health service in Aroland (LHS- measured by time to obtain service), the average level of education (LED - years of formal education) and the attitude to the larger white society as indicated by the variables termed integration (INT) and rejection (REJ) which will be discussed later.

Death rates for all population levels are taken to be functions of the average level of health which in turn is a function of the level of health service. The availability of health service (in the case of Aroland, the difficulty in obtaining medical help) appears to be a major factor contributing to infant deaths (DR1). The nearest full-time clinic is in Geraldton, 55 miles from Aroland by a rough road. Thus the low level of health service is undoubtedly a contributing factor to the death rate for the adult population as well. Deaths by natural causes are generally attributed to tuberculosis* (see a later discussion of average level of health) and those by accident, usually attributed in part to alcohol consumption (for example, as a likely cause of automobile accidents). Links from the level of alcohol consumption (AC) to death rates DR2 and DR3 are shown in Figure 12.

Migration rates for the four population groups are denoted by MIGR1, MIGR2, MIGR3 and MIGR4. The first of these is taken to be a function of the migration rates for population groups P2 and P3 which are the groups most affected by migration. The field studies indicated that the unavailability of employment is the most important factor drawing families and young married couples away from Aroland. Thus in Figure 12, the employment ratio (ER - the ratio of persons employed in wage positions to persons unemployed) and the wage rate (WR) are shown to be factors affecting MIGR2 and MIGR3. In addition, social factors felt to be modifiers of the economic factors are the degree of attachment to the community (ACOM) and the number of outside kin (OK).

In addition to the four population levels described above, for use in other areas of the model, three additional population variables are defined: total population (TP = P1 + P2 + P3 + P4), population ratio PR1 (YF = (P1 + P2)/TP) and population ratio PR2 (MF=(P2+P3)/TP).

---

*See Research Report Q.20, "Tuberculosis - Research Summary" by M. Rose for background information on this topic.

Summary of Demographic Component

The population of Aroland (presently 270) is modelled by four levels corresponding to particular age groups. The birth rate is assumed to be affected by health, education and attitude toward the white society. Death rates are assumed to be affected by level of health and degree of alcohol consumption. Migration is taken to be a function of available employment, the wage rate and attachment to the community.

Next, let us look at the housing component of the Aroland model as shown in Figure 13. As reported in the field study report, Aroland appears to be a "hodge-podge" of randomly placed houses and shacks constructed by the residents themselves, apparently from scraps of lumber. They appear to be in poor condition; few are painted and windows are often covered with cardboard. Although the interiors are generally kept clean and tidy, conditions are crowded (for example, a family of eight may live in a two-room dwelling). Attendant with the high average household size, are problems associated with the difficulty in obtaining water and the purity of that water. These will be discussed later as part of the health component. Probably in response to the crowded housing in the village, a number of Ontario Housing Corporation (OHC) dwellings are being constructed which will have modern sanitation facilities.

Two levels of housing are thus defined: the number of "OHC-type" dwellings (OHCD - whether constructed by OHC or not) and the number of other dwellings (OD). Knowing the total population (TP), the average household size (AHS) can be calculated. This is taken to be one factor in generating a demand for OHC-type dwelling (DOHC) as well as a demand for lower-standard dwellings (DOD). The "middle-fraction" (PR2) of the population (i.e. the number of employable adults) and the total income (TI) are also considered as factors affecting the demand for housing and especially the class of housing which is chosen. Because of the differences in the sanitation facilities possible with the two types of dwelling, the dwelling ratio (DWR = OHCD/OD) is a useful quantity to consider in determining the level of sanitation (LS) in the health component. Similarly the average household size (AHS) will affect the average level of health (ALH).

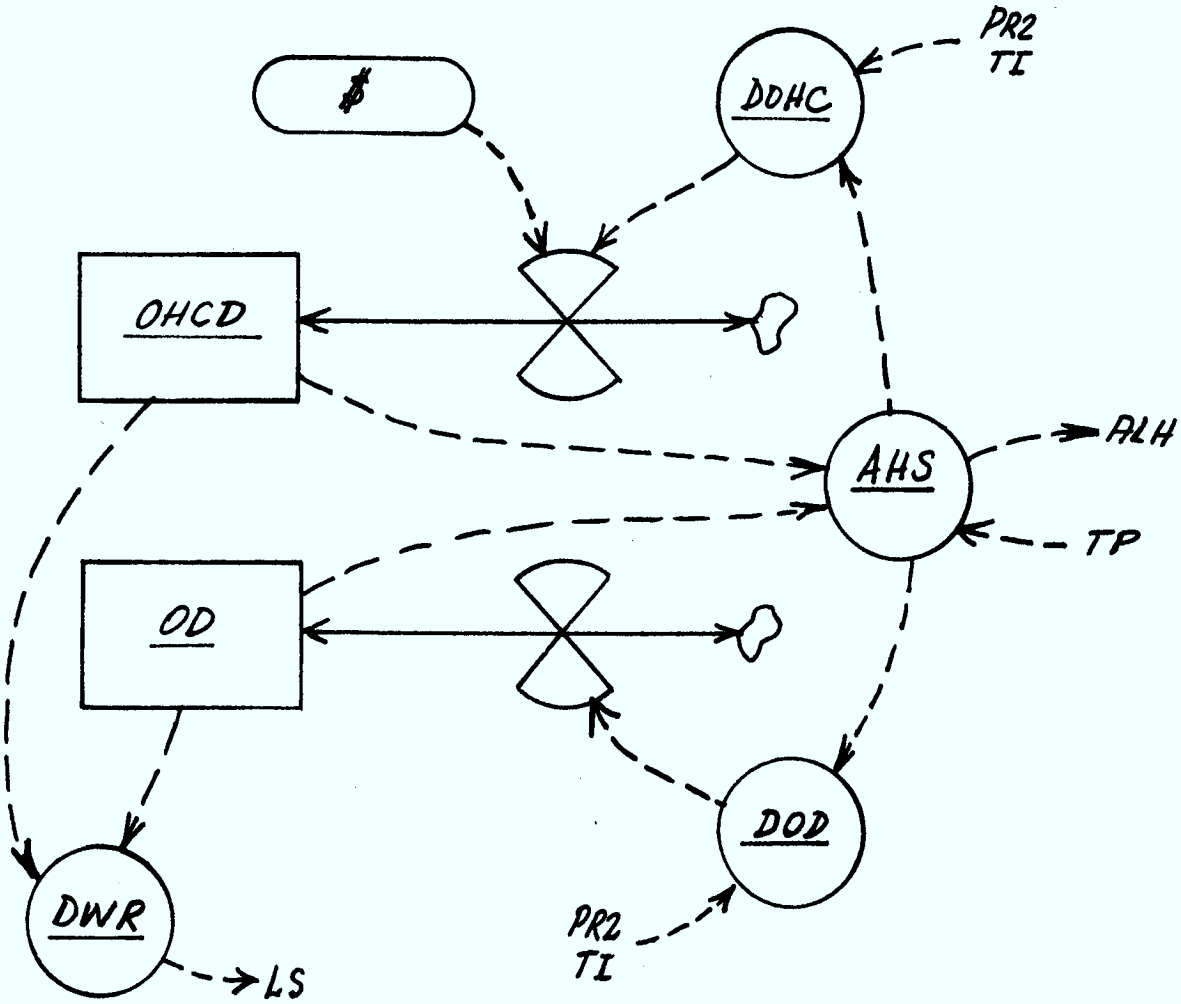

FIGURE 13.

Summary of Housing Component

Levels corresponding to the number of Ontario Housing Corporation type dwellings and the number of other dwellings are modelled. Demands for new dwellings of each class are modelled as functions of the average household size, the wage-earning fraction of the total population and the total income for the community.

The health and education components will be considered together since they are similar in structure. For education, one level is used to represent the average number of years of formal "southern-style" education for individuals in the community (LED). At the present time, the average level of education is relatively low. For example, no males over forty years of age have attended school. This is due primarily to the lack of school facilities in Aroland until the late forties. For the 26 to 39 age group, average level of education is about six years; for the 16 to 25 age group it is about nine years (10 for males, 7.5 for females). Three in this last group have attended one year at a community college. Thus the present rate of increase in LED is relatively high. The future is not clear however, since there exists some doubt as to the usefulness of formal education for life in Aroland. For example, it does not guarantee a well-paying job and at the same time robs a child of the chance to learn traditional skills (no attempt is made to give students special instruction in Ojibway history or language). Clearly, the matter of education and its style is related to the Arolanders' level of acculturation and their attitude to the white society as evidenced by the measures of integration and rejection.

Figure 14 shows the relevant structure for both the education and health components of the model. As described above, the rate of change of the level of education (LED) depends in part on attitudes toward the white society as indicated by the levels of integration (INT) and rejection (REJ) as well as the educational services available in Aroland (ESC-measured as level obtainable). The available facilities including qualified staff depend on expenditure on education (EEX) and could be effectively enhanced by the availability of educational television (ETV) in the community. The latter two variables are treated as exogenous inputs. The availability of schools in Aroland will likely affect the degree of traditional language retention (LR) and the feeling of attachment to the community (ACOM) of Arolanders. Education level also is likely to have impact on the levels of integration and

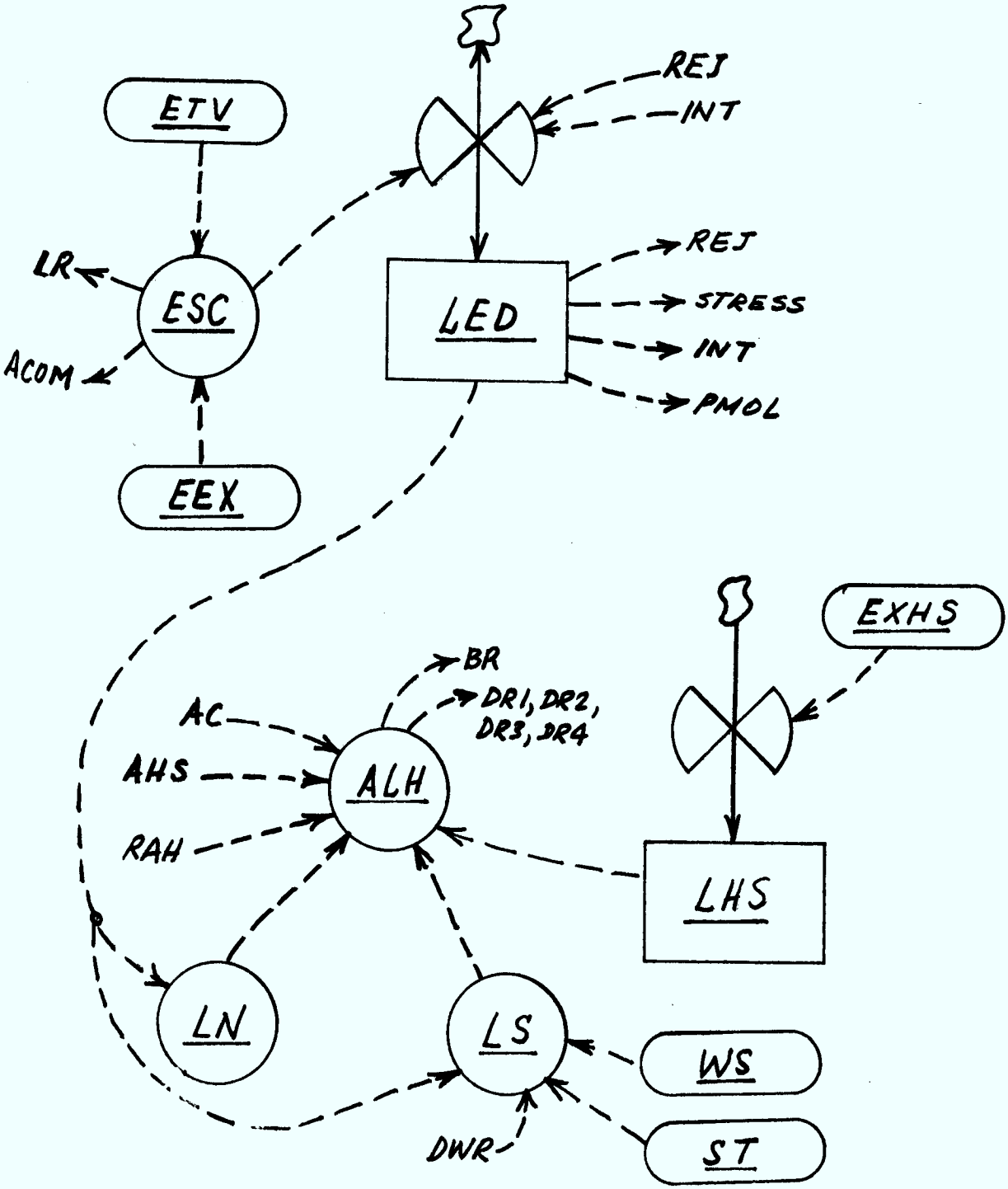
ETV
REJ
INT
LR
ESC
ACOM
LED
REJ
STRESS
INT
PMOL
EEX
EXHS
BR
DR1, DR2,
DR3, DR4
AC
AHS
ALH
RAH
LHS
LN
LS
WS
DWR
ST

FIGURE 14

rejection, stress levels and the amount of printed material in non-native language which is read. The links from integration and rejection to the rate of change of the education level and the subsequent effects of education level on integration and rejection levels is a good example of a simple feedback loop within the model.

The level of health service in Aroland (LHS) is measured in terms of the number of hour-miles needed to obtain medical services. The present level is relatively low (55 miles over rough road to the nearest full-time clinic in Geralton - by taxi). In order to alter this level some expenditure (EXHS) would be required. Every month or so, a public health nurse and doctor from the Department of Indian and Northern Affairs hold clinics in the village which are generally well attended. There is also a clinic available in Nakina which is rarely utilized for reasons unknown. Generally, although most of the available services are highly utilized, there is not a ready acceptance of medical advice. Nevertheless there appears to be no perception of any inadequacy in the medical services available. The average level of health (ALH) of an individual then is only partly dependent on the level of service (LHS); of equal importance are variables related to preventative medicine. Thus the degree of alcohol consumption (AC) the average household size (AHS), the level of nutrition (LN) and the level of sanitation (LS - measured in terms of distance to water supply) are important factors affecting ALH. Community radio has in the past (Radio Kenomadiwin announces the time and place of the local clinics) been used to alert the populace to available services. In the model, the average time spent listening to the radio (RAH) is included as a modifier of ALH.

Levels of nutrition and sanitation are thought to be primarily functions of the level of education. The level of sanitation is also dependent on the availability of water supply (WS), the utilization of sanitation technology (ST) (which are treated as exogenous variables) and the relative number of OHC-type dwellings (DWR) in the community - these providing adequate water and sewage facilities.

Summary of the Health and Education Components

The level of education (years of schooling) is taken to be a function of the facilities available right in Aroland and the attitude to the white society in terms of integration and rejection. The facilities available depend on expenditures on buildings, staff and on educational television aides. The services available in Aroland influence traditional language retention and the feeling of attachment to the community. The level of education affects the levels of integration and rejection, stress levels and the reading of non-native printed material.

Level of health service is a function of government expenditures and together with the degree of alcohol consumption, average household size, radio listening, level of nutrition and level of sanitation influences the average level of health of the population. Levels of sanitation and nutrition are affected by the average level of education and the availability of sanitation facilities (water and sewage).

There remain three components to describe: that concerned with social characteristics of the community, that concerned with the individual's response to acculturation and, lastly, that describing community communications. Communications, although the prime focus of the model, will be considered last since its relationship to the entire model will then be most easily described. Let us then look at the social component as reproduced in Figure 15.

Four variables are chosen to describe features of the social system in the community: attachment to community (ACOM), community autonomy (CA), community social stability (CSS) and orientation (ORI). The units of measurement of such variables are not immediately obvious; it may be best to use ordinal scales employing such terms as "relatively low", "medium", "relatively high", etc., rather than assigning numerical values based on some arbitrary unit. The functions (specifying interrelationships) which interface the social variables with other model components can be chosen so as to allow the use of such "units of measurement". The model structure for the social component can be thought of as a representation intermediate between a mathematical and a verbal description of the social system.

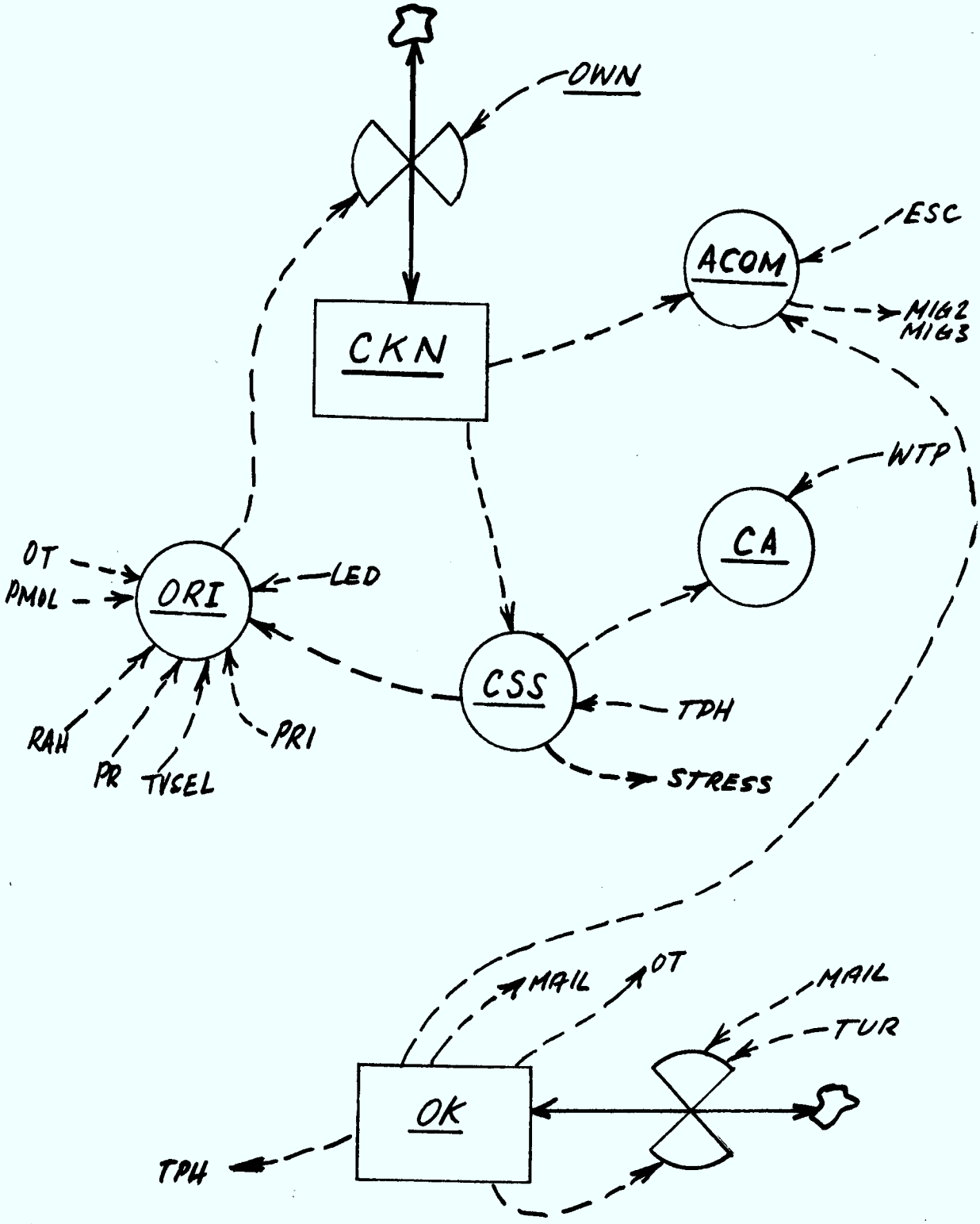
OWN
ESC
ACOM
MIG2
MIG3
CKN
WTP
CA
OT
PMOL
ORI
LED
CSS
TPH
STRESS
RAH
PR
TVSEL
PRI
MAIL
OT
MAIL
TUR
OK
TPH

FIGURE 15.

Aroland can be described as an orderly community in which privatization is great. It is rare that community problems are deemed to require outside help (e.g. from the Ontario Provincial Police). Thus, social control is achieved when necessary by the community itself. Theoretically, the Aroland Indian Association has the responsibility through various committees to set and carry out policies relating to the local cooperative store, education, entertainment, etc. In practice, meetings are held in times of crisis, when a problem presents itself.

The community kinship network is modelled by the level CKN which measures the individual's perception of the number of kin living in the community. This level plays an important role in modifying the individual's feeling of community attachment (ACOM) and the stability of the existing social structure (CSS). Social stability is also affected by the degree to which communication within and without the community is possible (most directly by the telephones per household, TPH - at present zero). Stability is probably an important factor governing the degree of community autonomy, which for Aroland is great. Autonomy is seen to be diminished by the effect of welfare transfer payments (WTP) when these become a significant portion of the total community income. Social stability plays a role in determining the stress level (STRESS) for Arolanders - this will be discussed later. It is also an input to the orientation variable (ORI) which describes the scope of those matters which concern the population of the village; that is, whether or not they are confined to matters of interest only within the village or of more or less global interest. This variable is obviously communication dependent as Figure 15 shows it to be affected by the amount of outside travel (OT) by Arolanders, the amount of printed material in non-native language read (PMOL), the hours spent "attentively" listening to radio (RAH), the fraction of those hours involving non-native language (PR) and the degree of selectivity exercised in television viewing (TVSEL). Also important as far as orientation is concerned is the level of education (LED) and the fraction of "young" people in the community (PR1).

Attachment to community (ACOM) is affected by the internal kinship network (CKN), the number of kin living outside Aroland (OK) and the degree to which education facilities (e.g. high school) are available in the village. Attachment plays a modifying role in determining migration which was described earlier as being primarily dependent on the availability of employment. Maintenance of kinship relations with former Aroland residents depends on communication, hence is affected by usage of telephones (TUR) and mail service (MAIL). Also, the rate of increase of outside kin is dependent on the present number of individuals who have "set an example" and moved away from the community. The number of kin outside Aroland (OK) is also a factor in

influencing the use of communications, hence potentially affects the use of mail services (MAIL) the installation of telephones (TPH) and the amount of outside travel (OT) carried out by Arolanders.

Summary of Social Component

Levels of the community kinship network (CKN) and of outside kin (OK) are modelled. These levels are major factors affecting attachment to the community (ACOM). Kinship also is a major factor determining social stability (CSS) which in turn affects community autonomy (CA). Orientation (ORI) of the community (inward or outward looking) is dependent on the degree to which communication media are used as well as the level of education (LED) and social stability (CSS). The maintenance of relations with outside kin (OK) is also communication dependent.

The model component concerned with acculturation and with psychologically-determined social variables is the most complex in terms of the number of interrelationships specified. Figure 16 shows the general type of structure which is common to the levels of ownership (OWN), language retention (LR), traditional religion retention (TR) and stress* (STRESS). All involve the additudinal variables termed integration and rejection. Together with the variable termed assimilation (not included in the Aroland model), these variables describe the attitudes held by individuals in a culture contact situation (traditional native culture in contact with that of Western technological society). Integration represents the degree to which individuals favour the acceptance of some elements of the larger (Euro-Canadian) culture while retaining other elements of their own culture. Total integration would represent a stable situation in which both the features of the traditional culture and of the larger society are in coexistence. Rejection represents the degree to which all elements of the larger society are felt to be unacceptable. Assimilation represents the degree to which all elements of the larger society are felt acceptable to the exclusion of any elements of the traditional culture. Total rejection would exclude all non-traditional cultural elements. Since Aroland is primarily a native community and is likely to remain so, assimilation is not considered a significant variable, hence its exclusion from the model structure.

---

*See Research Report Q.22, "STRESS" by M. Rose for a discussion of psychological stress.

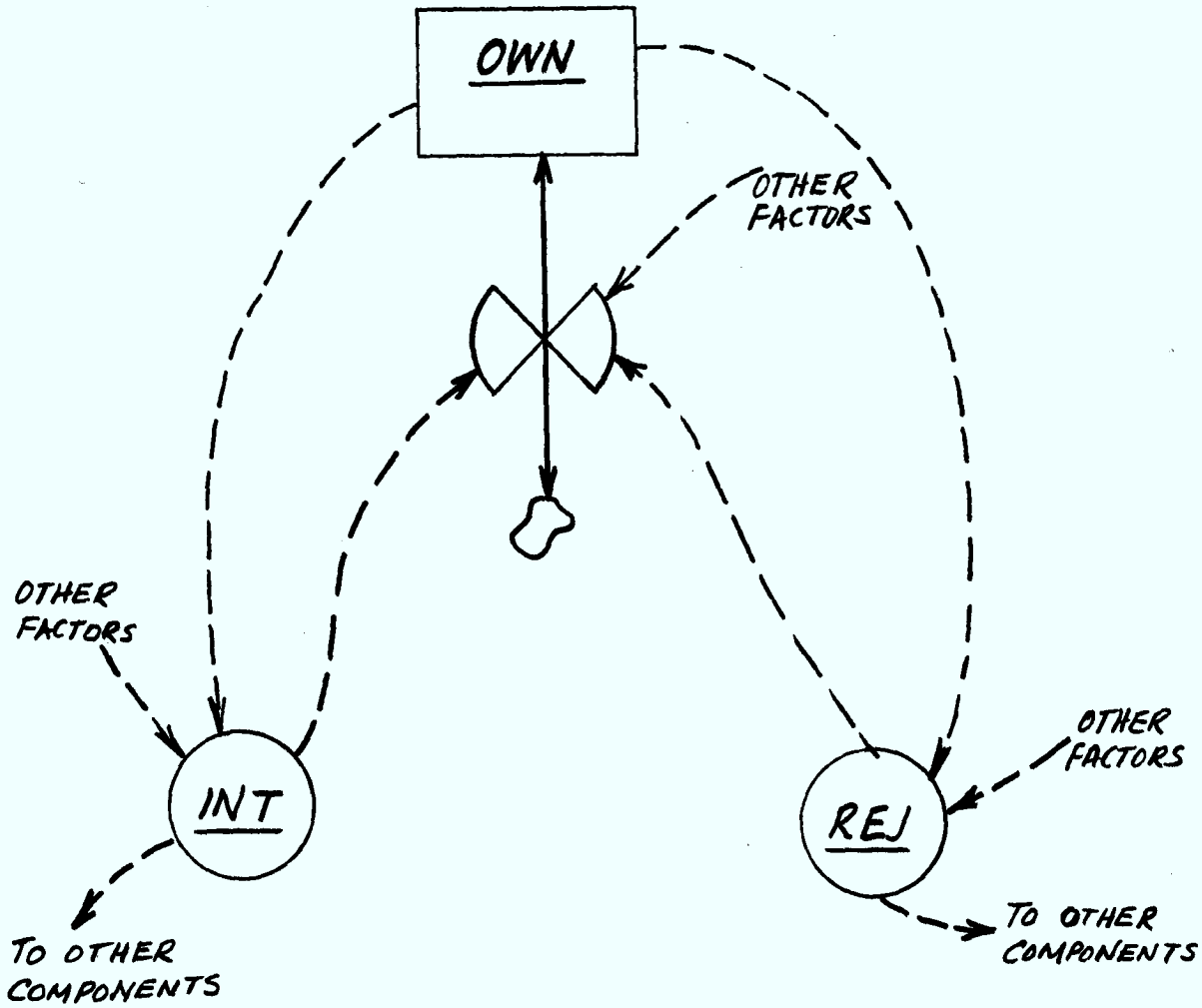
OWN
OTHER FACTORS
OTHER FACTORS
INT
REJ
OTHER FACTORS
TO OTHER COMPONENTS
TO OTHER COMPONENTS

FIGURE 16

Figure 16 shows how one measure of acculturation, namely that of ownership (OWN), and the integration (INT) and rejection (REJ) variables, are modelled. Ownership is possible to measure using the scale developed for use in the field studies which assigns a value from 0 to 5 depending on the number and type of a list of items* which are owned. The level of ownership then is taken to be one factor influencing attitudes toward integration and/or rejection. (Note that these two variables describe different phenomena and are not necessarily mutually exclusive although an attitude favouring rejection would likely be accompanied by an attitude rejecting the concept of integration). Thus there is a link between the level OWN and both INT and REJ. The attitudes INT and REJ in turn affect the change in the level of ownership; hence there are links from INT and REJ back to the rate of change of OWN. If OWN were the only component of INT or REJ, one attitude would probably prevail as time progressed; however other levels and variables also affect INT and REJ and hence both attitudes can be held to greater or lesser degrees. Similar feedback loops to those described for ownership can be traced out for stress, language retention, level of education, and retention of traditional religion (see Figure 10).

Attitudes alone do not specify rates of change of the levels relating to the acculturative situation. Stress, which is measured by the existence of medical and paramedical symptoms is also felt to be affected by social stability (CSS), by mass media (television - TVSEL, locally produced video material - LOVM, radio - RAH and PR, printed material - PMOL and PMNL) and by telephone usage (TUR). The presence of information communicated by mass media and via telephone is felt to represent increased cultural contact which generally, depending on attitudes (INT and REJ), tends to increase stress (see the section of this report concerning psychological field studies). Stress itself can affect changes in attitude and also contribute to social disorders such as a high rate of alcohol consumption (AC). Field tests generally indicate a lower stress level in Aroland than in the reserve community of Longlake.

Ownership is felt to be affected by (in addition to attitudinal factors) the same communications-related factors mentioned in the case of stress. Here again, communication with the larger society (especially one-way communication in the case of the mass media) represents increased cultural contact which, depending on the prevailing attitude to the larger society, can effect changes in such culture-related levels as ownership. Thus factors affecting the rates of change of retention of traditional language and religion are similar to those affecting stress and ownership.

---

*Store account, washing machine, automobile, bank account and life insurance.

Summary of Cultural - Attitudinal Component

Acculturation-related levels of ownership (OWN), traditional language retention (LR) and traditional religion retention (TR) are modelled. The fourth level in this component is that of stress (STRESS). Two variables are used to describe the attitude of individuals to the larger (Euro-Canadian) society: integration (INT) and rejection (REJ). The four levels are related to the attitudinal variables by feedback loops; for example, ownership affects the attitude towards rejection which in turn can effect changes in the level of ownership. In addition to attitude to the larger society, the four cultural levels can be affected by communication with the larger society. This communication can take the form of television (TVSEL), radio (RAH, PR), printed material (PMOL, PMNL) or telephone usage (TUR).

Let us now discuss the communications component of the model and examine its relationship to the remainder of the model which has been described above. The variables associated with communications are shown in Figure 17, together with links with the other model variables.

First, let us review the available communications facilities in the community and the nature of communication within the village and with points outside. Aroland has at present four pay telephones, only two of which are readily accessible to the residents. Only six survey respondents out of forty-five reported using the telephone once a week. Hence, the usage rate is very low, especially among the older people. Service appears to be the major reason for using the telephone. Some reasons suggested for the low usage rate are cost (all calls are long-distance), inconvenience, difficulty with English and lack of outside kin having telephones. A petition to have household phones installed was organized and sent to the Government and Bell Canada and it is probable that such service will be extended from Nakina. Despite the petition, interest in having household telephones remains low.

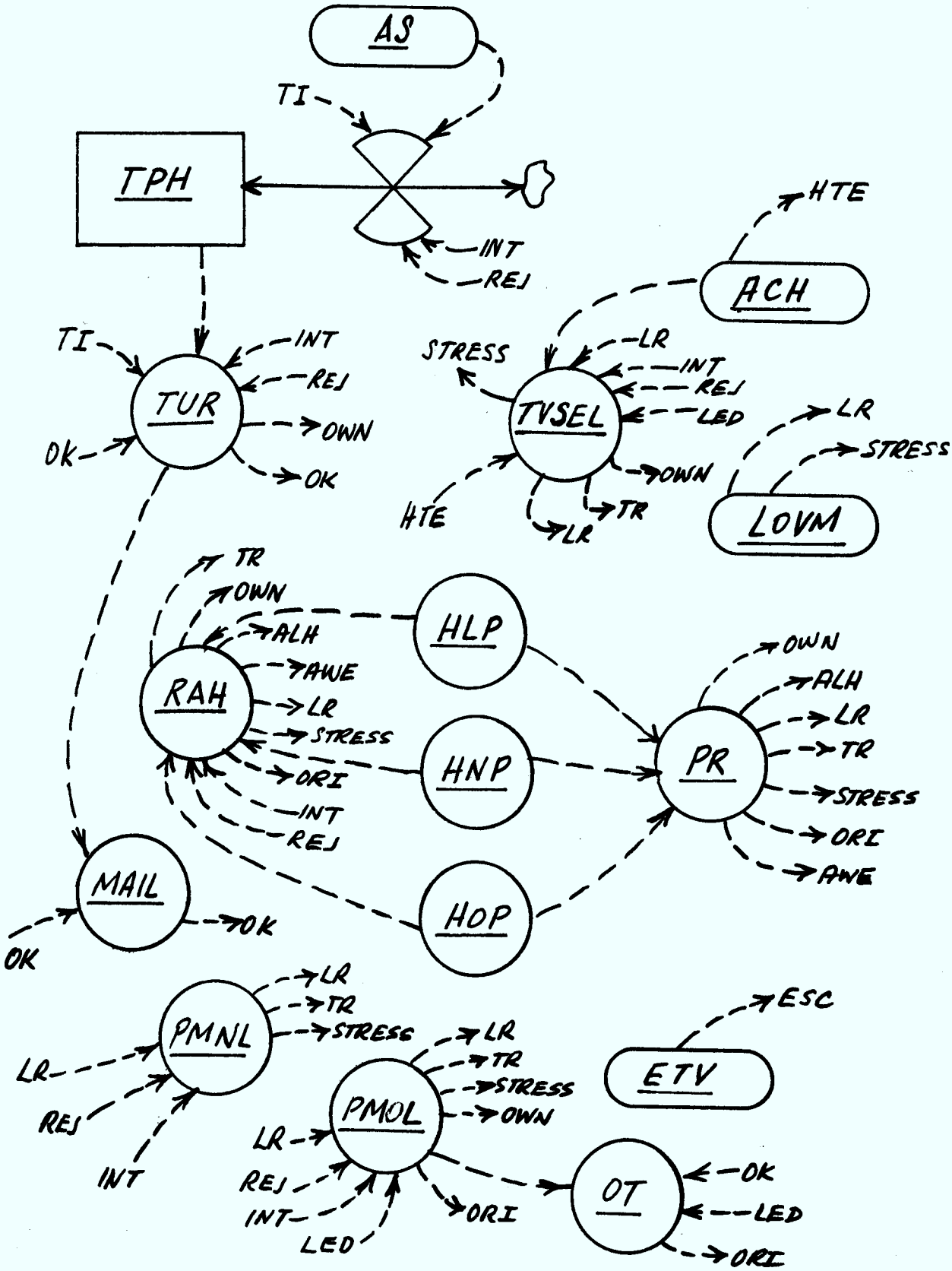
AS
TI
TPH
INT
REJ
HTE
ACH
TI
INT
REJ
TUR
OK
OWN
OK
STRESS
LR
INT
REJ
TVSEL
LED
OWN
HTE
TR
LR
LR
STRESS
LOVM
TR
OWN
ALH
HLP
AWE
RAH
LR
STRESS
ORI
INT
REJ
HNP
HOP
OWN
ALH
LR
TR
PR
STRESS
ORI
AWE
MAIL
OK
OK
LR
TR
PMNL
STRESS
LR
REJ
INT
LR
TR
STRESS
PMOL
OWN
LR
REJ
INT
LED
ORI
ESC
ETV
OT
OK
LED
ORI

FIGURE 17.

There is little printed material available in Aroland, probably due to the low literacy level; however what magazines present in the community were judged to be well "read" from cover-to-cover,despite language difficulties.

In contrast to the availability and presence of printed material, the average number of television receivers per household was typical of a Euro-Canadian community with some households having two or more receivers (three respondents had colour television). A high degree of selectivity in television viewing appears to be a salient characteristic of Arolanders with respondents reporting that they watched one or two favouriteprograms per week and nothing else. Only one channel (CBC Geraldton) is presently receivable but the main factor influencing this high selectivity and corresponding low number of contact hours in television viewing would seem to be the availability of other activities such as fishing, trapping and hunting which have recreational value in addition to their economic value.

Radio ownership is not as widespread as for television and listening is on a more casual basis (other activities can be carried out at the same time). A substantial number listen to the CBC news from a repeater station in Geraldton as well as music from whatever stations are receivable (e.g. some high-powered Chicago stations are receivable at night). The mobile station, Radio Kenomadiwin, when located in Aroland was listened to by all Arolanders. The main factors in its popularity seemed to be the music which was featured (country) and in its airing of requests from people of all ages. The community-related aspects of the station's programming were minimal and could have been expanded given adequate resources and personnel.

Due to illiteracy among the older people, the practice of letter writing, except for business purposes, is rare in Aroland except for the younger age groups (under 25 years of age). The process of sending and receiving business mail is however, taken as a matter of course by most Arolanders.

The choice of variables shown in Figure17 reflects the present state of communications in Aroland described above. The level representing the average number of telephones per household (TPH) is the only communications level used. This fact reflects the desire to model how communications facilities are used rather than how many such facilities are available. The rate of change in TPH is taken to depend on the total income (TI) for the village, the service which is available (AS) (i.e. whether or not it is possible to have telephones in every household) and the attitudinal variables, integration (INT) and rejection (REJ). The telephone usage rate (TUR) is a function of

the number of telephones available (TPH - reflecting the convenience of telephoning), total income (TI - reflecting the cost factor), the number of outside kin (OK) and the attitude toward technological society (INT and REJ). The usage rate (TUR) in turn is felt to affect changes in ownership (OWN), the maintenance of outside kin (OK), and the use of mail (MAIL) for both business and social matters. The quantity of mail sent and received is itself influenced by outside kin and can serve to maintain ties with those kin.

Selectivity in television viewing (TVSEL) was chosen as the main variable describing how television is used by the population. Selectivity can be defined as the ratio of the number of programs (or hours) spent in "attentive" viewing to the total number available. It is affected by level of education (LED), language retention (LR), attitudes to the larger society (which is reflected in the type of programs viewed) (INT and REJ) and the amount of time spent in hunting, trapping and fishing activities (HTE). Although it is dangerous to confidently specify the effects of television viewing on the community, this question can be taken to be of such significance that some possible links to the remainder of the model should be considered. Consequently, in Figure 17, selectivity (which, for a fixed number of programs available, is proportional to hours of viewing) is shown to affect levels of ownership (OWN), tradition language and religion retention (LR and TR) and stress (STRESS). An exogenous variable (ACH) is used to specify changes in the number of channels available which is likely to affect time spent in traditional activities (HTE), as well as selectivity in viewing (TVSEL). Use of video tape equipment to produce locally originated video material (LOVM) which could be viewed over existing television receivers is included as a future possibility by an exogenous variable which would have possible effects on stress and language retention and likely other social variables which are difficult to specify since it is impossible to predict the uses to which this medium (video tape) could be put.

The role of radio in the community is even more difficult to assess than that of television since listening is on such a casual basis. The principal variable chosen is "radio attention hours" (RAH) which is a measure of the time spent on the average attentively listening to radio programming. Three variables (which could be considered exogenous) are used to describe the nature of the programming available - HLP (hours of local programming, at present zero without Radio Kenomadiwin), HNP (hours of native language programming) and HOP (hours of "other", non-native language, programming). The ratio of native language programming to the total is defined as PR = (HLP + HNP)/(HLP + HNP + HOP). Thus in suggesting possible influences of radio listening, both RAH and PR

are important and both are felt to influence levels of ownership (OWN), stress (STRESS), traditional language (LR) and religion retention (TR) and the orientation of the population (ORI) toward local or global matters. The public service potential of radio is reflected by links to average level of health (ALH) and actual wage earners (AWE). Radio listening is itself influenced by the type of programming available and attitudes toward integration and rejection.

Use of printed material is measured by the number of publications read in native language (PMNL) and in non-native language (PMOL). Both are influenced by attitudes (INT and REJ) and by traditional language retention (LR). In addition PMOL is influenced by the level of education (LED - indicating degree of literacy in English). Information obtained from printed media is felt to have an influence on changes in the levels LR, TR, STRESS and, in the case of PMOL, on OWN and outside travel (OT). Outside travel is also a function of outside kin and general level of education (LED). It is probably a factor changing orientation towards a more global outlook.

Summary of Communications Component

The importance of this component and the large number of relationships involved make it impractical to provide a useful summary of this component. It is suggested the casual reader begin on Page 40 to obtain a description of communications variables.

3.4 Conclusions

The above somewhat lengthy description of the Aroland community model structure has been presented in order to provide information which is useful to those planning to develop such a model for other communities. Also, it will serve as a guide to planning the more functional Sioux Lookout model now under development. A fundamental argument could be raised against the development of model structures for social systems which contain a multitude of unspecified relationships and a number of variables whose units of measurement cannot be precisely defined. We, however, strongly believe in the usefulness of such an exercise despite its subjective and hence non-scientific nature. It can be thought of as the first step in applying a systems methodology to the task of understanding

the nature of a social system to the extent of being able to successfully plan future social development. Since it is but a first step, one cannot expect answers to planning questions to be directly provided; however it provides the necessary basis from which to continue the overall task in a coordinated multidisciplinary manner. This seems to be the only way to make progress in solving a very complex problem for which there is no presently available means of solution.

3.5 List of Abbreviations Used in Aroland Model

AC	Alcohol Consumption
ACH	Available Channels
ACOM	Attachment to Community
AHS	Average Household Size
ALH	Average Level of Health
ANR	Available Natural Resource
AR	Animal Resource
AS	Available Service
AWE	Actual Wage Earners
BR	Birth Rate
CA	Community Autonomy
CKN	Community Kinship Network
CSS	Community Social Stability
DEPR	Depreciation Rate
DO	Demand for Other Dwellings
DOHC	Demand for OHC Type Dwellings
DR1	Death Rate for Population Group 1
DR2	Death Rate for Population Group 2
DR3	Death Rate for Population Group 3
DR4	Death Rate for Population Group 4
DWR	Dwelling Ratio
EEX	Education Expenditure
ER	Employment Ratio
ESC	Education Services in the Community
ETV	Educational Television
EXHS	Expenditure on Health Service
HLP	Hours of Local Programming
HOP	Hours of Other Programming
HTE	Hunting and Trapping Effort
INT	Integration (attitude toward)
IRD	Investment in Resource Development
IRM	Investment in Resource Management
ISP	Investment in Special Projects
LED	Level of Education
LHS	Level of Health Service
LN	Level of Nutrition
LS	Level of Sanitation
LR	Language Retention
LOVM	Locally Originated Visual Material
MAIL	Mail Volume
MIGR1	Migration Rate for Population Group 1
MIGR2	" " " " " 2
MIGR3	" " " " " 3
MIGR4	" " " " " 4

NLP	Hours of Native Language Programming
NRRR	Natural Resource Replacement Rate
NRVR	Natural Resource Usage Rate
OD	Other Dwellings
OHCD	Ontario Housing Corporation Type Dwellings
OI	Other Income
OK	Outside Kin
ORI	Orientation
OT	Outside Travel
OWN	Ownership
P1	Population Group 1
P2	" " 2
P3	" " 3
P4	" " 4
PEW	Persons Employed in Wage Positions
PMNL	Printed Material in Native Language
PMOL	" " " Other "
PR1	Population Ratio 1
PR2	" " 2
PUW	Persons Unemployed in Wage Positions
PWE	Potential Wage Earners
RAH	Radio Attention Hours
RDEO	Resource Development Employment Opportunities
REJ	Attitude Toward Rejection
RMEO	Resource Management Employment Opportunities
RT	Resource Technology
SEL TV	Television Selectivity
SPEO	Special Projects Employment Opportunities
ST	Sanitation Technology
STRESS	Stress Level
TI	Total Income
TP	Total Population
TPH	Telephones Per Household
TR	Traditional Religion Retention
TUR	Telephone Usage Rate
TWEO	Total Wage Employment Opportunities
WI	Wage Income
WR	Wage Rate
WREG	Wage Regulations
WS	Water Supply Availability
WTP	Welfare Transfer Payments

4. SIOUX LOOKOUT: SOCIOLOGICAL ASPECTS

4.1 Background

In studying any community as a social system, many interdependent components must be identified and delineated. To date, the sociological approach to the field work has been to outline social networks within the community and to study patterns of interaction and relationships which together define the community structure. In order to obtain information useful in constructing a dynamic model, time series data concerning the community were accumulated. Demographic and social statistical data were collected from a variety of documented sources; household interviews were conducted on a random sample of the population, Euro-Canadian and Indian; and community officials were interviewed concerning their roles and opinions of the town regarding both social phenomena and telecommunications.

During a three-month period over the Summer of 1974, the field team established residency in Sioux Lookout, a predominantly white community in Northwestern Ontario. The community functions as a major orientation centre for the more isolated communities in the region. Two sociology field workers interviewed about 10% of the town's Euro-Canadian families selected on a random sample basis from the municipality's 1974 Taxation Assessment forms. For this aspect of the study the family was selected as the basic demographic unit and separate information was collected, where possible, from each adult member of the household. With the assistance of two local residents, data was collected from 106 respondents. A somewhat higher percentage of the Ojibway Indian residents were interviewed with the aid of a local Indian assistant.

4.2 Model Components

The interview schedule was based on ten identifiable components: household composition, ethnic affiliation, mobility and migration, kinship, communications, community participation, political awareness, employment, education, and health. Information obtained from each of these components will be used in the development of a community model. A simplified block diagram of the proposed model is shown in Figure 18. Clearly, the nature of Sioux Lookout dictates that the model be somewhat different in structure from that discussed in Section 3 concerning the Aroland model. In particular those components which are boldly outlined in Figure 18 are specific to Sioux Lookout and probably to similar communities in the north. A detailed description of the Sioux Lookout model will be

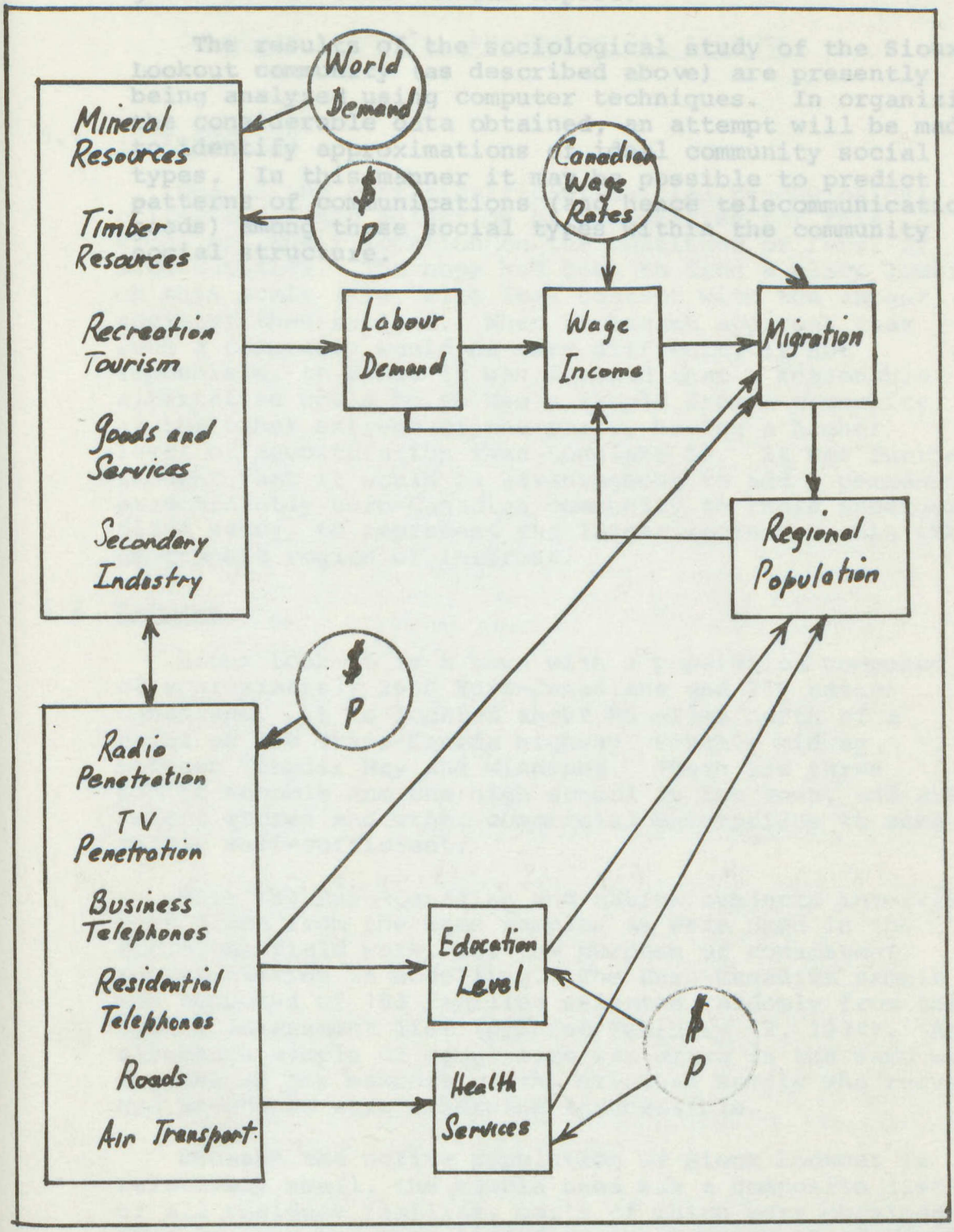

SIMPLIFIED REGIONAL MODEL BLOCK DIAGRAM

FIGURE 28

given in the final Annual Report.

The results of the sociological study of the Sioux Lookout community (as described above) are presently being analyzed using computer techniques. In organizing the considerable data obtained, an attempt will be made to identify approximations of ideal community social types. In this manner it may be possible to predict patterns of communications (and hence telecommunications needs) among these social types within the community social structure.

5. SIOUX LOOKOUT: PSYCHOLOGICAL ASPECTS

5.1 Introduction

One of the most significant initial psychological criteria for the selection of communities for this study was their location on the continuum of level of acculturation. The hope had been to find a place lower on this scale (i.e. with less contact with the larger society) than Aroland. When it became apparent that such a community would be very difficult, if not impossible, to find, it was decided that a reasonable alternative would be to use a sample from a community at the other extreme of the scale, having a higher level of acculturation than Longlake 58. It was further thought that it would be advantageous to add a permanent, predominantly Euro-Canadian community, to those undergoing field study, to represent the larger society within the geographic region of interest.

5.2 Samples

Sioux Lookout is a town with a population composed of approximately 2600 Euro-Canadians and 200 native Canadians. It is located about 45 miles north of a point on the Trans-Canada highway, roughly midway between Thunder Bay and Winnipeg. There are three public schools and one high school in the town, and sufficient stores and other commercial enterprises to make it fairly self-sufficient.

Both the Euro-Canadian and native subjects interviewed were drawn from the same samples as were used in the sociology field work, for the purpose of consistent representation in modelling. The Euro-Canadian sample was composed of 103 families selected randomly from the town's assessment list (printed February 12, 1974). An alternate sample of equal size was drawn in the same way to make up for members of the original sample who refused, had moved, or were otherwise inaccessible.

Because the native population of Sioux Lookout is relatively small, the sample used was a composite list of all resident families, parts of which were obtained from various sources, including the Department of Communications, the Children's Aid Society, the Northern Affairs Branch of the Ministry of Natural Resources, the Sioux Lookout Communications and Friendship Centre, the Sioux Lookout Zone Hospital, and in consultation with the Department of Indian and Northern Affairs.

An effort was made to obtain samples balanced by age and sex in both cultures. Fair success was achieved with the Euro-Canadian sample, but there were very few native families to be found in the oldest category (over age 40), most older Ojibway people preferring to remain on their reserves. Because of this circumstance it was impossible to obtain a full native sample in this age category.

The refusal rates for the Euro-Canadian sample were 24.0% for males and 19.2% for females, and for the Ojibway sample were 13.3% for males and 18.2% for females.

School Sample

Because of the unusual results in the auditory measurements of last year in Aroland, Longlake, and Westport, a validation run of the tests on a group of people independent of the study sample was thought appropriate. Arrangements were made through the Board of Education in Dryden to test students at the high school in Sioux Lookout and at the largest of the three public schools. The tests used were the Simultaneous Tones test and the Sequential Tones test, which were used in the field work last year, and the Embedded Figures test, a visual measure of the same psychological construct, differentiation, as a control.

It was decided to use a sample spread over the whole age range practical, so classes of Grades 3, 5, 7, 9, and 11 were tested. Because of a condition requiring parental permission for each child, some of the classes, especially in the lower grades, were not full, but this did not interfere with the findings as a whole.

The mean performances for the classes tested formed a developmental curve reaching a peak between the ages of 8 and 10 years. This corresponds closely to the results found in testing school children in Toronto.

That all ages tested performed successfully on the auditory tests (i.e. scored above the chance expectation of 12.5) supports the contention that the tests are valid for measuring auditory differentiation in northern communities, and suggests re-examination of the results for Aroland, Longlake, and Wesport.

In the review of the data, the possibility was recognized that the marking codes for the two tests could have been reversed, since they are of identical format. Fortunately, this was a testable hypothesis, because the subjects in Aroland had not been able to perform the Sequential Tones test. In rescoring the Aroland tests, it was confirmed that the marking codes had been switched, and so the auditory measures for all three samples were

rescored. All groups attempting the tests succeed in scoring higher than chance expectation.

5.3 Testing

The battery of measures used in Sioux Lookout was the same as that used in Longlake and Aroland, as outlined in the second Progress Report (Q.18). Very briefly, this included perceptual measures for visual, auditory, and spatial abilities, personal style measures, testing independence and reserve, attitude measures for gauging feelings toward integration, assimilation, and rejection, and stress measures for deviance, marginality, and acculturative stress. These measures were intended to probe abilities and preferences with regard to interpersonal communication and telecommunication, and to gauge the effects of the networks of contact already established in the north.

5.4 Results

Table 1 indicates the numbers and ages of respondents in both Sioux Lookout samples. Table 2 indicates the means and standard deviations for these groups, and for the groups tested in 1973 for comparison.

Table 1

Sioux Lookout Respondents

	Canadians			Ojibway		
Age Group	Male	Female	Total	Male	Female	Total
16-25	6	7	13	5	8	13
26-40	7	7	14	7	8	15
40+	6	7	13	1	2	3
TOTAL	19	21	40	13	18	31

Table 2

Measure	OJIBWAY						EURO-CANADIAN			
	Aroland		Longlake		Sioux Lookout		Sioux Lookout		Westport	
	Mean	S.D.	Mean	S.D.	Mean	S.D.	Mean	S.D.	Mean	S.D.
Perceptual Skills										
Koh's Blocks	101.1	32.9	99.1	29.0	106.1	28.9	94.1	29.8	101.6	24.0
Matrices	27.3	5.4	27.2	5.4	28.7	5.2	29.7	5.9	30.5	3.4
Rod and Frame	16.5	15.4	16.0	9.3	16.7	10.0	18.9	13.9	27.2	8.7
SETT			12.7	2.2	14.7	2.5	16.4	4.1	13.9	3.3
SITT	13.5	2.9	13.2	2.7	14.4	2.8	15.0	3.9	13.2	2.5
Personal Style										
Independence	9.2	3.7	9.2	4.9	10.5	5.5	12.1	5.1	9.8	3.9
Reserve	10.8	5.1	8.3	5.3	8.1	4.1	6.5	3.5	9.8	4.0
Attitudes										
Assimilation	+ .89		+1.27		+1.31		+2.85		+3.50	
Integration	+1.74		+1.68		+2.21		+1.45		+ .98	
Rejection	- .16		+1.49		-1.55		-4.10		-2.86	
Acculturative Stress										
Stress	3.9	2.3	5.9	4.4	5.1	3.3	2.9	2.7	1.8	2.3
Marginality	3.3	2.2	5.8	3.4	3.8	2.8	1.8	1.9	1.9	2.3
Deviance	7.6	2.2	8.0	2.4	7.5	2.9	5.8	3.1	6.8	3.1

5.5 Discussion

In two measures of visual perceptual abilities, Koh's blocks and Raven's matrices, the native samples performed at an equal level with the Euro-Canadian sample, and in the third, the rod and frame test, at a higher level, despite education and test sophistication differences. In auditory measures there is no consistent difference in the performance of Euro-Canadian and Ojibway samples.

In the measures of personal style, reserve and independence, there appears a trend along the acculturative scale in the native samples toward the scores of the northern Euro-Canadian sample, where relatively low scores on both scales are found. This is consistent with the expectation from acculturation theory, and such an interpretation is supported by the findings in the attitude measures.

In the measures of stress, again there is evidence of differences along the scale of acculturation. In all three measures (stress, marginality, and deviance) the highly acculturated Sioux Lookout native sample scores closer to the Euro-Canadian Sioux Lookout sample than the intermediate Longlake sample. Furthermore, the low acculturated Aroland sample scores lower than the intermediate sample. This is interpreted as initial increase of stress with increasing contact with Euro-Canadian culture, and later decrease with increasing acceptance of elements of that society, and increasing stability within it.

As may be expected, native sample scores for attitude to assimilation are much lower than Euro-Canadian sample scores, and are higher for attitude to rejection. The rejection score for the highly acculturated Sioux Lookout native sample is about midway between the other native samples and the Euro-Canadian samples. Also, this native sample has the highest score of all samples for the integration measure. This indicates the attitude changes to be expected from people taking on elements of a foreign society while maintaining high values on elements of their own culture.

Most of the implications discussed in the second Progress Report are strengthened in the light of the new data, though it is no longer indicated that auditory channels of communication should be less effective than visual channels. The attitudinal and stress measures support the views that native people have less of a "communicative nature" than Euro-Canadians, and have attitudes conflicting with the Euro-Canadians' strong inclination toward assimilation. In addition, even though the highly acculturated Sioux Lookout native sample

did show a lower level of stress than that of the Longlake sample, it is still very much higher than the level found in Euro-Canadians. Since these findings indicate the necessity of the reduction of cultural imposition where possible, the suggestion of native control of telecommunications for themselves receives further support from the new data.

6. FURTHER WORK PLANNED FOR 1974-75

Work is proceeding on a sensitivity analysis and a general critical appraisal of the regional model, involving several disciplinary viewpoints. If necessary, these may lead to some minor modifications in the forms of the functions linking the variables and levels.

A model of Sioux Lookout based on the 1974 field work is now under construction and should be finished in time for some similar critical appraisal prior to the end of 1974-75.

Preparatory work towards an overall integrating report on the entire project will start early in 1975.

Appendix A.1

PERSONNEL INVOLVED IN THE PROJECT DURING 1974-75

The following persons at Queen's University have been involved in this project in the roles indicated:

a) Co-investigators (all unsalaried except Dr. L.E. Peppard)

Dr. J.C. Beal, Professor, Department of Electrical Engineering. Overall coordinator of the project; part-responsibility for communications technology aspects.

Dr. J.W. Berry, Associate Professor, Department of Psychology. Responsible for psycho-cultural aspects in close cooperation with Professor K.A. Herman.

(On leave from 1 September 1974)

Dr. F. Cooke, Associate Professor, Department of Biology. Responsible for biological aspects.

(On leave from 1 September 1974; replaced by Dr. R. Harmsen)

Dr. C.E.S. Franks, Associate Professor, Department of Political Studies. Responsible for political aspects.

Dr. R. Harmsen, Associate Professor, Department of Biology. Responsible for biological aspects.

Prof. K.A. Herman, Assistant Professor, Department of Sociology. Responsible for sociological aspects in close cooperation with Dr. J.W. Berry.

(On leave from 1 September 1974)

Prof. J.G.M. McKirdy, Assistant Professor, School of Business. Responsible for economic aspects.

Dr. L.E. Peppard, Assistant Professor, Department of Electrical Engineering. Assistant coordinator; central responsibility for the development of the modelling process.

b) Graduate Students

S. Eddy, M.A. student, Department of Political Studies.
Working with Dr. C.E.S. Franks.

R. Rumberg, M.B.A. student, School of Business.
Working with Prof. J.G.M. McKirdy.

c) Undergraduate Students

L.N. Mombourquette, B.A. student, Department of Sociology.
Working with Prof. K.A. Herman.

M. Rose, B.Sc. student, Department of Biology.
Working with Dr. F. Cooke and Dr. R. Harmsen.

d) Other Assistants

J.A. Love, B.Sc. (Eng.), Electrical Engineering.
Working with Dr. L.E. Peppard.

T.A. Mawhinney, B.A., Psychology.
Working with Dr. J.W. Berry.

V.G. Weinreb, B.A., Sociology.
Working with Prof. K.A. Herman (until September 1974).

e) Secretary

Mrs. F.G. Kennedy.

Appendix A.2

PROJECT REPORTS AND WORKING PAPERS

(Available on request from the coordinator.)

Report No.	Author	Title	No. of Pages
Q. 1	R. Chambers	Government Involvement in Northern Developments.	57
Q. 2	L.E. Peppard	Forrester Modelling and Flow-Diagrams: An Introduction.	12
Q. 3	H.K. Tang	Ontario Hydro in NW Ontario.	5
Q. 4	H.K. Tang	The Anik Satellite System.	5
Q. 5	H.K. Tang	The Unfinished Mystery of Radio Kenomadiwin.	6
Q. 6	H.K. Tang	Telephone Service in NW Ontario.	9
Q. 7	K.A. Herman, G. Weinreb	Demographic Profile of Northwestern Ontario - with detailed statistics.	28
Q. 8		1st Progress Report to Communications Canada (dated 11 Jan. 1973) on this project, covering the period 1 July - 31 Dec. 1972	53
Q. 9	R. Adomavicius, L.E. Peppard & G. Weinreb	Report on Visits to Interdisciplinary Modelling Projects at Oregon State University, and the University of British Columbia.	22
Q. 10		Question Form - QUIST Community Study, 1973	4
Q. 11	R.J. Adomavicius & L.E. Peppard	Causal Description of the Regional Model.	17
Q. 12	R.A. Cameron	Dynamic Model of a Forest Tract.	65
Q. 13	J. Aitken	Telecommunications and Regional Development.	70

Appendix A.2 Cont'd.

Q. 14		1st Annual Report to Communications Canada covering the period 1 July 1972 - 31 March 1973.	41
Q. 15		Digital Computer Programme for NW Ontario Regional Model.	24
Q. 16	G. Weinreb, K.A. Herman	The Social Model - Report of Field Work (in Aroland and Long Lac).	25
Q. 17	J. Kane	Perceptual Differentiation in Ojibway and White Populations.	26
Q. 18		2nd Progress Report to Communications Canada covering the period 1 April - 30 September 1973.	60
Q. 19	Y. Vautrin	A Dynamic Model of Tourism and Recreation in Northwestern Ontario.	85
Q. 20	M. Rose	Tuberculosis - Research Summary.	13
Q. 21		2nd Annual Report to Communications Canada covering the period 1 April 1973 - 31 March 1974.	77
Q. 22	M. Rose	Stress.	12
Q. 23	M. Rose	Extensions to the Regional Model of Northwest Ontario: Telecommunications.	7

NOTE: Q. 1 to Q. 19 were previously listed in the 2nd Annual Report.

Appendix A. 3

PUBLISHED PAPERS ARISING FROM THIS WORK.

1. L.E. Peppard, R.J. Adomavicius, J. Aitken, J.C. Beal, J.W. Berry, G.E. Dawson, C.E.S. Franks, K.A. Herman, J.G.M. McKirdy, P.J. McLane, H.K. Tang and G. Weinreb, "The Application of Dynamic Modelling to a Multidisciplinary Study of Telecommunications Impact on Developing Regions", International Electrical Electronics Conference and Exposition, Toronto, Ont., Oct. 1-3, 1973.

2. J.W. Berry, "Education Communication and Housing in Northern Canada: Applications of Cross-Cultural Psychological Research", American Psychological Association, Annual Meeting, Montreal, August 1973.

3. L.E. Peppard, J.W. Berry and K.A. Herman, "Multidisciplinary Approaches to the Assessment of Telecommunications Impact", Seventh Biennial Symposium on Communication, Queen's University, Kingston, Ont., 30-31 May, 1974.

4. L.E. Peppard, J.W. Berry, K.A. Herman and J.C. Beal, "Multidisciplinary Approaches to the Assessment of Telecommunications Impact", Canadian Psychological Association Institute on Psychology and Telecommunications, University of Windsor, Windsor, Ont., 10-11 June, 1974.

5. L.E. Peppard, R.J. Adomavicius, H.K. Tang, J.C. Beal, "A Multidisciplinary Approach to the Modeling of a Socioeconomic System", 1974 Systems, Man and Cybernetics Conference, Dallas, Texas, 2-4 October, 1974.

CACC / CCAC
75096

QUEEN'S UNIVERSITY (KINGSTON, ONT)
--INTERDISCIPLINARY STUDY OF TELE-
COMMUNICATIONS
--"The application of dynamic
modelling..."

P
91
C655
Q44
1974

DUE DATE

201-6503

COMMUNITY MODEL OF
AROLAND, ONTARIO

FIGURE 10.

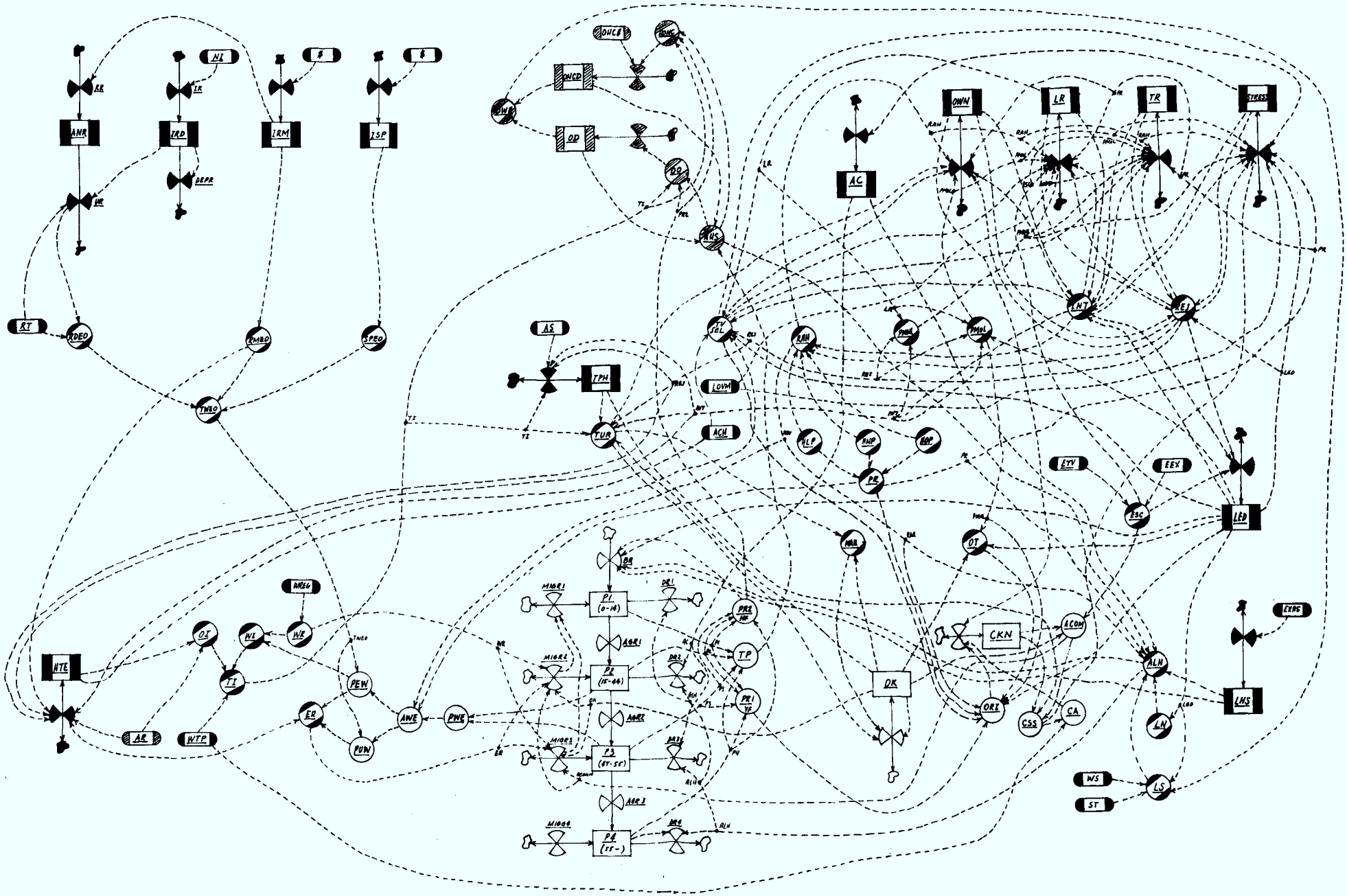

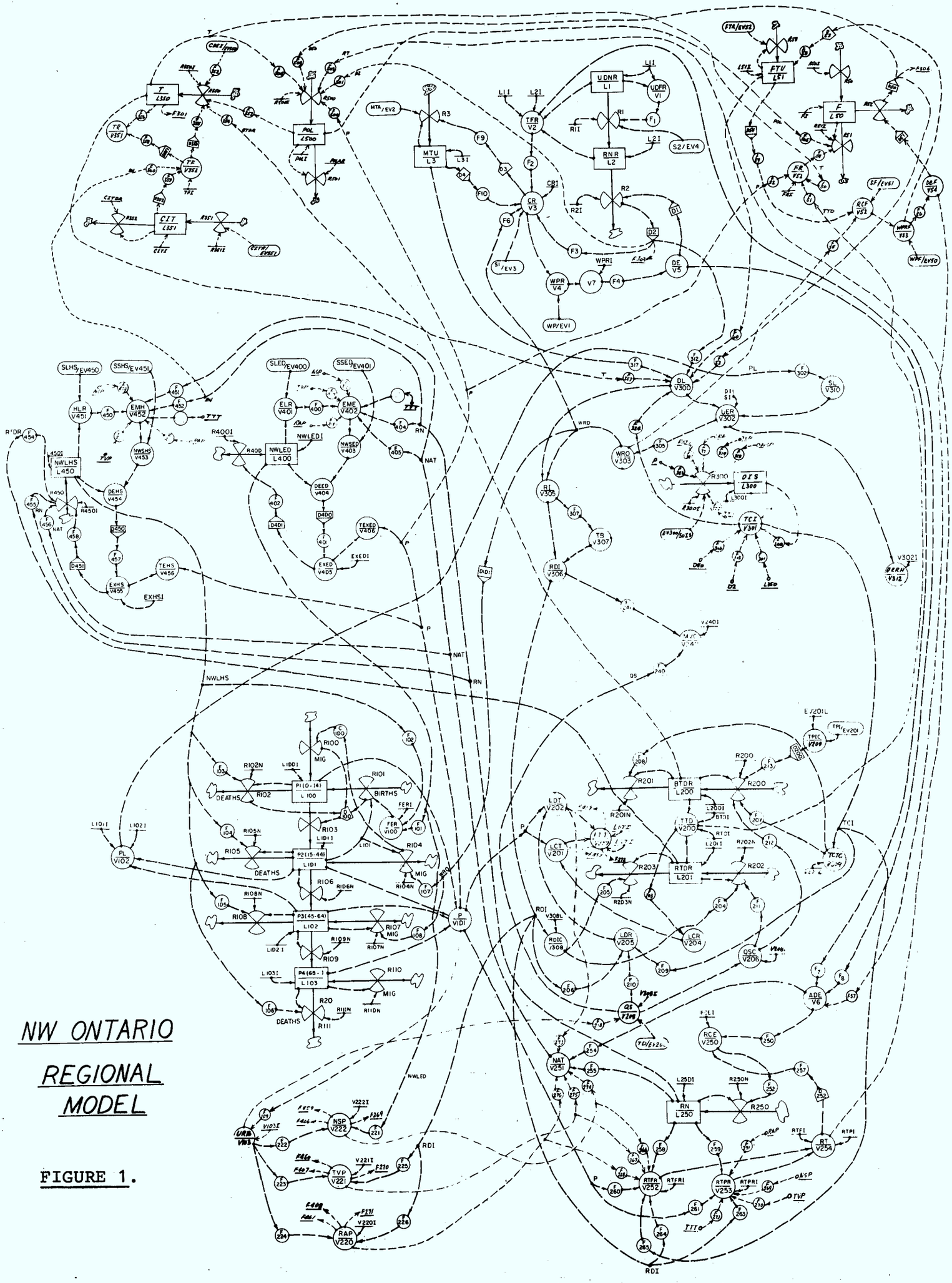

FIGURE 1.