Bartek Consultants

Telecommunications & Telecontrol Engineers

FINAL REPORT FOR THE STUDY OF
THE IMPACT OF ISDN SERVICES
ON RADIO FREQUENCY SPECTRUM
& INTERCONNECTION REQUIREMENTS

DEPARTMENT OF COMMUNICATIONS
REQUIREMENT #41ST.36100-7-0172

P
91
C655
F5678
1988

P
91
C655
F5678
1988

BARTEK CONSULTANTS
TELECOMMUNICATIONS & TELECONTROL ENGINEERS

FINAL REPORT FOR THE STUDY OF THE IMPACT OF ISDN SERVICES ON RADIO FREQUENCY SPECTRUM & INTERCONNECTION REQUIREMENTS

DEPARTMENT OF COMMUNICATIONS
REQUIREMENT #41ST.36100-7-0172

Industry Canada
LIBRARY
JUIL JUL 2 0 1998
BIBLIOTHÈQUE
Industrie Canada

COMMUNICATIONS CANADA
JUIN JUNE 30 1988
LIBRARY – BIBLIOTHÈQUE

MARCH 1988

P
91
C655
F5678
1988

DD 8159777
DL 8172056

REPORT CONTENTS

EXECUTIVE SUMMARY

1.0 INTRODUCTION

- 1.1 STUDY OBJECTIVES
- 1.2 PROJECT METHODOLOGY
- 1.3 REPORT STRUCTURE

2.0 ISDN BACKGROUND

- 2.1 ISDN CONCEPTS
- 2.2 ISDN STANDARDS DEVELOPMENT
- 2.3 ISDN SERVICES
- 2.4 ISDN ARCHITECTURE
- 2.5 ISDN SIGNALLING
- 2.6 ISDN NUMBERING
- 2.7 ISDN EVOLUTION

3.0 CANADIAN TRADE OBLIGATIONS

- 3.1 GATT AGREEMENT
- 3.2 CANADA - US FREE TRADE AGREEMENT
- 3.3 TRADE AGREEMENT IMPLICATIONS

4.0 ISDN IMPACT ON RADIO FREQUENCY SPECTRUM

- 4.1 DIGITAL RADIO SYSTEMS IN ISDN
- 4.2 FREQUENCY SPECTRUM CONGESTION
- 4.3 CELLULAR RADIO
- 4.4 TRUNKED MOBILE RADIO
- 4.5 MOBILE SATELLITE
- 4.6 PERSONAL RADIO
- 4.7 FIXED TERRESTRIAL RADIO
- 4.8 SATELLITE COMMUNICATIONS
- 4.9 RADIO CONCLUSIONS

5.0 ISDN IMPACT ON INTERCONNECTION REQUIREMENTS

- 5.1 ISDN ACTIVITY IN CANADA
- 5.2 ISDN IMPLEMENTATION ISSUES
- 5.3 DOC'S ROLE IN TELECOMMUNICATIONS

REFERENCES

EXECUTIVE SUMMARY

1.0 Introduction

The Department of Communications (DOC) engaged Bartek Consultants to undertake a study entitled "The Impact of ISDN Services on Radio Frequency Spectrum and Interconnection Requirements". DOC's objectives in having the study carried out are:

- to study and report on the impact of future ISDN services in the next ten years and beyond on radio frequency spectrum management in general, and on the fixed terrestrial, fixed satellite, and mobile services in particular

- to review, analyze, and report on existing and evolving digital telecommunications network services, equipment and systems, technical regulatory interconnection issues and criteria, and the framework for the development of technical interface specifications/standards including certification and testing issues for the attachment of customer premises terminal equipment and the interconnection of local systems including radio

2.0 ISDN Background

A detailed description of the integrated services digital network (ISDN) is given in the main report. Bartek wishes to emphasize that ISDN concepts are still evolving, and some aspects of ISDN standards might be changed slightly in the CCITT I-Series Recommendations (Blue Book) to be issued in 1988.

3.0 Canadian Trade Obligations

The report examines the implications of the GATT Agreement and the Canada - US Free Trade Agreement on telecommunications in general, and on ISDN in particular.

The report notes that, although the GATT Agreement has a code on technical barriers to trade, the GATT memebers recognize that advanced technology

products pose special problems and that further rules must be implemented in the future.

The report also concludes that, if the Canada - US Free Trade Agreement is ratified, it will be necessary for Canada and USA over a period of time to examine all existing certification standards and procedures for radio and terminal equipment to identify differences that presently exist and to endeavour to the maximum extent possible to remove any differences.

The report also notes that both countries shall have to adopt an increased awareness of trade implications in telecommunications, in particular when adopting new standards, so that neither country unwittingly adopts standards which violate the agreement.

Several external and internal co-ordination and monitoring functions are identified in the report, and it will be necessary for the DOC to assign qualified personnel to undertake these functions.

4.0 ISDN Impact on Radio Frequency Spectrum

The report examines the impact of ISDN on radio frequency spectrum in mobile radio systems (cellular radio, trunked radio, mobile satellite, and personal radio) and in fixed radio systems (point-to-point terrestrial, point-to-multipoint terrestrial, point-to-point satellite, and point-to-multipoint satellite). Several important issues emerge in the analysis. The main radio conclusions are summarized as follows:

4.1 Frequency Spectrum Conclusions

4.1.1 Demand For Frequency Spectrum

As we move closer to the information age, users will demand more information, and in turn, more bandwidth. However, ISDN itself will not cause an increase in demand, as the demand would be there even if ISDN had not been conceived. ISDN will allow us to deal with the increasing demand for bandwidth in a more efficient manner.

Although the demand for bandwidth will increase in the future, the extent to which additional radio frequency spectrum will be required will be governed by:

- the rates for narrowband and broadband ISDN services

- the extent to which fibre optic systems will be used in ISDN

Both questions will be primarily influenced by government policy. These policies have not yet been established. Therefore, it is not possible to make quantitative predictions regarding radio spectrum requirements in year 2000. Further, it would be premature to make firm plans regarding reallocation of spectrum at this time.

4.1.2 Mobile Radio

Since all mobile radio applications best operate at frequencies lower than 3 GHz, and since the requirement for all types of mobile radio service will continue to increase, we must seek methods to optimize the available mobile radio frequency spectrum. Methods available are:

- moving fixed radio systems to frequencies above 3 GHz

- integrating the various mobile services to achieve better traffic efficiencies

- use of digital systems that provide a greater bps/Hz ratio

- use of systems that permit greater frequency reuse

- use of low bit rate voice coding

4.1.3 Fixed Radio

Fixed radio frequency allocations below 3 GHz will have to be shifted over a period of time to new frequency allocations above 3 GHz to make more spectrum available for mobile radio. This shift is foreseen to be a long term measure (after year 2000), and would take place in preparation for integrated mobile services and personal radio.

The trend to use digital systems, instead of analogue systems, will continue. This would have occured even if ISDN had not been conceived. However, ISDN will further increase the demand for digital systems, and frequency allocations for

analogue fixed service should be gradually converted to digital fixed service.

Fibre optic systems are becoming an increasingly viable alternative to fixed radio systems. Fibre optic systems, particularly in broadband ISDN applications, will mitigate the increasing demand for fixed radio frequencies, and their use should be encouraged by the DOC.

4.2 ISDN Conclusions

4.2.1 Mobile Radio

We do not have sufficient mobile radio spectrum available to consider the use of the presently defined ISDN channel rates in mobile radio. Lower bit rate ISDN channels must defined by CCITT to provide voice and data service. To conserve frequency spectrum, low bit rate voice coding systems must be used.

Although we cannot have full ISDN bit rates in mobile radio, ISDN functionality should still be maintained to provide ISDN features using standard ISDN protocols. The AT&T cellular access digital network (CADN) concept, whereby multiple mobile radio unit channels would be temporarily combined to provide the channel capacity required by the service requested, has merit.

We shall have to develop standards for 16 Kbps, 8 Kbps, and lower bit rate voice coding systems in order to minimize the number of techniques in service, particularly in mobile radio systems.

4.2.2 Fixed Radio

The frequency spectrum available above 3 GHz is less limited, and the use of full ISDN channel rates could possibly be achieved. Nevertheless, we should conserve spectrum wherever practical to do so.

As good quality, low bit rate voice coding sytems become available, their use in fixed systems should be encouraged. Likewise, as video coding techniques are perfected, they should also be used in fixed systems. Full rate video services, i.e. broadband ISDN, should be carried primarily on fibre optic systems.

4.3 Availability of Radio Equipment for ISDN

Only a few suppliers of radio equipment appear to have given serious thought to ISDN at this point in time. However, the changes required to adapt a digital radio system to ISDN are relatively minor, i.e. clear channel capability and ISDN interfaces. It is expected that radio equipment suppliers will react fairly quickly as ISDN begins to pervade the public telecommunications system.

4.4 Future Cellular Radio System

The allocation of the additional 2 X 5 MHz in the 800 MHz band, which is presently on reserve for MSAT, would make the implementation of the new cellular radio system in Canada significantly easier, and would ensure that the grade of service to existing cellular users is not degraded during implementation of the new system.

4.5 Adequacy of DOC's Spectrum Management System

ISDN will not introduce any changes in the RF sense. There will be a need to modify or develop new Radio Standards Specifications and Standard Radio System Plans to accomodate new technologies, particularly digital cellular radio. Also, there will be a need to accomodate more digital and less analogue systems. However, it would appear that no changes to the DOC's existing Spectrum Management System need to be made.

5.0 ISDN Impact on Interconnection Requirements

5.1 ISDN Activity in Canada

Several ISDN field trials are planned or underway in Canada. The major operating companies in Canada are actively preparing for ISDN. It is reasonable to predict that, by the year 2000, exchanges and transmission systems will have been upgraded for ISDN to the extent that customers in all major centres will be able to have ISDN services.

5.2 ISDN Implementation Conclusions

The report concludes that numerous issues must be resolved before ISDN can be implemented in Canada. These are identified in the main report, along

with suggestions as to what the DOC might do in preparation. The main issues foreseen are as follows:

5.2.1 Powering of Customer Premises Equipment

Since the telephone company presently provides power to the single line telephone, the issue which will likely arise is whether the telephone company should provide power from the central office exchange to ISDN line terminating equipment and ISDN voice terminals in basic rate service, particularly in the event of local power failure.

5.2.2 Analogue Telephones

The I-Series Recommendations optionally permit the use of analogue telephones, in parallel with digital ISDN terminals, on the two wire subscriber loop. A question which may arise is whether the telephone companies should be required to support this option.

5.2.3 NT1 Ownership & U Interface

The question of who should own the transmission line termination equipment at the customer's premises (NT1), the customer or the telephone company, will definitely become an issue.

A related, but still separate, question is what specifications for the transmission line (the U interface) should be used.

5.2.4 North American Numbering Plan

In North America, the telecommunications industry is attempting to determine the manner in which the existing North American telephony numbering plan should be expanded to include ISDN numbering. To-date, there is no industry consensus and the North American telecommunications industry appears to be at a stalemate.

5.2.5 Network Interworking

An ISDN is to function with other ISDNs, telephony networks, packet networks, and telex networks. The use of different numbering plans is only one problem to be solved. Also to be resolved are the

physical and protocol differences between the networks.

5.2.6 Quality of Service & Network Performance

In an ISDN, it is anticipated that multiple carriers will be used. The quality of service becomes difficult to evalulate when multiple carriers are involved in providing an overall service to the customer. It may necessary to put minimum network performance standards in place, as well as verification procedures.

5.2.7 Protection Standards

With the introduction of ISDN, it will be necessary to examine the existing network protection standards to determine what changes and additions are necessary for ISDN terminal equipment.

5.2.8 ISDN Billing

Various innovative billing features are foreseen for ISDN. However, if multiple carriers are used, as is also foreseen, it will be difficult to achieve these billing goals.

5.2.9 Integration of CATV & ISDN Access

With the cost of fibre optic systems continuing to drop, telephone companies are projecting that, not too far in the future, it will be cost-effective to bring optical fibres, rather than copper wires, to the user. Such an eventuality will bring broadband ISDN access to the home. When that occurs, it will be necessary to consider whether ISDN access lines and CATV distribution plant should be integrated.

5.2.10 ISDN & Tariffs

As ISDN is implemented in Canada, we are likely to find that some tariffs, which were established for services of the traditional networks, need to be modified. New tariffs will also be required for new services. Pricing issues which may arise include:

- access tariff basis
- long distance tariff basis
- DS-1 channelizing costs
- ISDN supplementary services

5.3 DOC's Role In Telecommunications

Traditionally, the DOC has taken a direct role in spectrum management and terminal attachment matters, but in other telecommunications matters, has largely let industry take the lead.

With the introduction of ISDN and the greater use of multiple carriers, many important technical decisions will have to be made, and the DOC may have to take a more direct role than in the past.

Further, if the Canada - US Free Trade Agreement is implemented, there will be a need for the DOC to be more directly involved in all aspects of telecommunications to ensure that trade agreement violations are avoided.

MAIN REPORT

1.0 INTRODUCTION

1.1 Study Objectives

The Department of Communications (DOC) engaged Bartek Consultants to undertake a study entitled "The Impact of ISDN Services on Radio Frequency Spectrum and Interconnection Requirements". Bartek is pleased to have been given the opportunity to undertake this most interesting assignment.

As stated in the Statement of Work, the DOC's objectives in having the study carried out are two-fold, namely:

- to study and report on the impact of future ISDN services in the next ten years and beyond on radio frequency spectrum management in general, and on the fixed terrestrial, fixed satellite, and mobile services in particular

- to review, analyze, and report on existing and evolving digital telecommunications network services, equipment and systems, technical regulatory interconnection issues and criteria, and the framework for the development of technical interface specifications/standards including certification and testing issues for the attachment of customer premises terminal equipment and the interconnection of local systems including radio

1.2 Project Methodology

The contract was awarded by Supply and Services Canada in late October 1987. Project commencement discussions were held between the DOC and Bartek in late November 1987.

The project investigations were conducted from December 1987 to February 1988, and were carried in the following manner:

- an extensive literature research of IEEE, CCIR, CCITT, and library sources was undertaken

- interviews were held with numerous experts in operating companies, manufacturers, users groups, and research institutions

An Interim Report was submitted to the DOC in early January 1988. Discussions concerning the content and thrust of the Final Report followed.

Bartek is pleased to submit the Final Report, and wishes to express its appreciation to the DOC for the co-operation given by its representatives throughout the study.

1.3 Report Structure

This report is structured in five main sections, namely:

- Introduction

- ISDN Background

- Canadian Trade Obligations

- ISDN Impact on Radio Frequency Spectrum

- ISDN Impact on Interconnection Requirements

2.0 ISDN BACKGROUND

2.1 ISDN Concepts

Prompted by the continuing world-wide evolution toward completely digital transmission and switching networks, the need for separate networks to support voice, data, and video services, and need to support an ever-increasing number of standards, the concept of the integrated services digital network (ISDN) was conceived. An ISDN is characterized by:

- end-to-end digital connectivity
- access and service integration
- non-associated channel signalling
- customer control of service features
- upward compatibility of network features
- a limited number of standard interfaces

ISDN has been defined in terms of functional elements and services, so that equipment units used in ISDN networks can evolve independently of each other and independently of the services.

2.2 ISDN Standards Development

2.2.1 CCITT & CCIR

The International Telecommunications Union (ITU), an agency of the United Nations, represents 162 countries and sponsors two telecommunications standards committees, namely:

- International Telegraph and Telephone Consultative Committee (CCITT)
- International Radio Consultative Committee (CCIR)

CCITT has led the world-wide telecommunications industry in the definition of ISDN standards. The first ISDN standards were published by CCITT in 1984 as the I-Series of Recommendations (Red Book). Since that time, additional refinement and definition of ISDN concepts has taken place, and additional CCITT I-Series Recommendations will be published in 1988 (Blue Book). It is expected that ISDN standards evolution will continue for some years to come.

In parallel to CCITT, CCIR has been examining the impact of ISDN on future radio systems. CCIR and CCITT have been co-ordinating closely.

CCITT and CCIR Recommendations are voluntary standards, developed in the public fora by various Study Groups. The Study Groups are made up of members from national administrations, operating companies, and scientific and industrial organizations around the world. Each country must determine the extent to which it wishes to adhere to the CCITT and CCIR Recommendations.

Canada actively participates in the CCITT and CCIR standards process. Canada's national organization is chaired by the DOC, and has members from operating companies, manufacturers, regulatory bodies, R&D organizations, and federal and provincial governments.

2.2.2 ISO

The International Organization for Standardization (ISO), made up of members from 89 countries, is a specialized international standardization agency. ISO has seats in the CCITT General Assembly. The

American National Standards Institute (ANSI) is the member body for USA.

ISO developed the open system interconnection (OSI) reference model, which was subsequently adopted by CCITT and has significantly influenced the development of ISDN standards.

2.2.3 T1 Standards Committee

The T1 Standards Committee on Telecommunications in USA is responsible to the Exchange Carriers Standards Association (ECSA) for national network integration functions in USA. The T1 Committee also supports ANSI.

The CCITT I-Series Recommendations were written on the basis that the transmission line termination equipment at the customers premises would be owned by the exchange carrier. Accordingly, CCITT developed specifications for the interface between the subscriber-owned terminal equipment and the transmission line termination equipment (this interface is called the S/T reference point and is fully described later).

In the USA, because of its terminal attachment policy, the Federal Communications Commission (FCC) dictated that the customer should be able to own the transmission line termination equipment, as is presently the case with voice terminal equipment. ECSA Technical Sub-Committee T1D1.3 was subsequently charged with the task of developing specifications for the interface between the transmission line and the transmission line terminating equipment (this interface is called the U reference point and is fully described later). The U interface specifications are presently in final draft form, and are expected to be accepted in the USA in the near future.

2.2.4 TAPAC

In Canada, with the introduction of customer-owned terminal equipment, the Terminal Attachment Program Advisory Committee (TAPAC) was formed to establish terminal equipment standards. TAPAC draws members from operating companies, users groups, manufacturers, and the DOC. TAPAC is chaired by the DOC, and TAPAC documents are issued under the authority of the DOC.

2.3 ISDN Services

ISDN services are of two types, bearer services and teleservices, both of which may be enhanced with supplementary services. These are described as follows:

2.3.1 Bearer Services

Bearer services are basic information transport services provided by the telecommunications carrier, wherein the telecommunications carrier takes responsibilty only for the information transport functions and the customer takes the responsibility for end-to-end functions.

Two categories of bearer services have been defined for ISDN, namely:

- circuit mode, using physical connections through the network
- packet mode, using logical connections through the network

The ISDN bearer services are further defined in terms of their attributes, which are of two types:

- information transfer attributes
- access attributes

Values have been assigned to attributes so that the customer may completely describe the ISDN bearer service he desires.

A matrix of bearer services, attributes, and possible attribute values is given overleaf in Figure 2-1.

Additionally, general service attributes are presently under definition.

FIGURE 2-1

BEARER SERVICE ATTRIBUTES

INFORMATION TRANSFER

ATTRIBUTE	POSSIBLE VALUES
TRANSER MODE	CIRCUIT, PACKET
TRANSFER RATE	16, 64, 384, 1536, 1920 KBPS
TRANSFER CAPABILITY	UNRESTRICTED DIGITAL INFO, SPEECH, 3.1 KHZ AUDIO, 7 KHZ AUDIO
STRUCTURE	8 KHZ INTEGRITY, SERVICE DATA UNIT INTEGRITY
CONNECTION ESTABLISHMENT	DEMAND (SWITCHED), RESERVED, PERMANENT (LEASED)
CONFIGURATION	POINT-TO-POINT, MULTIPOINT
SYMMETRY	UNDIRECTIONAL, BIDIRECTIONAL SYMMETRIC, BIDRECTIONAL ASYMMETRIC

ACCESS

ATTRIBUTE	POSSIBLE VALUES
ACCESS PROTOCOL	D, B, H0, H11, H12
SIGNALLING PROTOCOL	D CHANNEL, X.25
INFORMATION ACCESS PROTOCOL	A-LAW PCM, MU-LAW PCM, ADPCM, X.25

2.3.2 Teleservices

Teleservices provide end-to-end communications services between users, using protocols established by the telecommunications operators. Examples of teleservices foreseen in ISDN include:

- o telephony
- o telex
- o video telephone
- o teletex
- o electronic mail
- o videotex

ISDN teleservices are still under definition.

2.3.3 Supplementary Services

Supplementary services modify or enhance bearer services or teleservices. Examples of different supplementary services include:

- o network camp-on
- o selective network call forwarding
- o calling party identification

Supplementary services are still largely under definition.

2.4 ISDN Architecture

2.4.1 Channel Types

The following channel types have been defined for ISDN:

- o B channel - a 64 Kbps channel for the transport of user information only
- o D channel - a 16 Kbps channel for the transport of signalling information and, optionally, slow speed packet-switched information in a basic rate access application

  or

  a 64 Kbps channel for the transport of signalling information only in a primary rate access application
- o H0 channel - a 384 Kbps channel for the transport of user information only
- o H11 channel - a 1536 Kbps channel for the transport of user information only
- o H12 channel - a 1920 Kbps channel for the transport of user information only

Additional higher capacity channels are under study and will be defined in the near future.

The defined channel types are to be used for both ISDN subscriber access and network transmission.

2.4.2 Functional Groupings & Reference Points

Functions to be performed in an ISDN access system have been grouped together. Reference points have been defined at the boundaries of the functional groupings. The defined functional groupings and reference points are illustrated in Figure 2-2 overleaf.

FIGURE 2-2

ISDN ACCESS REFERENCE POINTS AND FUNCTIONAL GROUPINGS

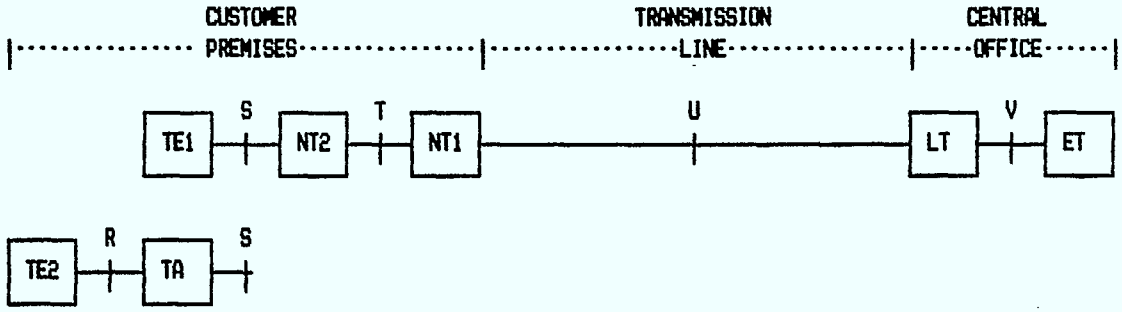

LEGEND

- FUNCTIONAL GROUPING

† - REFERENCE POINT

TE1 - TERMINAL EQUIPMENT CONFORMING TO ISDN STANDARDS

TE2 - TERMINAL EQUIPMENT CONFORMING TO EARLIER STANDARDS

TA - TERMINAL ADAPTOR, PROVIDING THE CONVERSION FROM NON-ISDN STANDARDS TO ISDN STANDARDS

NT1 - NETWORK TERMINATION 1, WITH PRIMARY FUNCTIONS BEING TRANSMISSION LINE TERMINATION AND LAYER 1 MULTIPLEXING AND MAINTENANCE

NT2 - NETWORK TERMINATION 2, PROVIDING INTERFACE TERMINATION, LAYER 1, 2, AND 3 PROTOCOL HANDLING AND MULTIPLEXING, SWITCHING, CONCENTRATION, AND MAINTENANCE; NT2 MIGHT BE A PABX, LAN, OR TERMINAL CONTROLLER

LT - LINE TERMINATION

ET - EXCHANGE TERMINATION

2.4.2.1 Customer Premises Equipment

TE1 designates terminal equipment conforming to ISDN standards. Examples of TE1 include digital telephones, computer terminals, facsimile machines, etc. TE1 interfaces with NT2 at the S reference point.

TE2 designates terminal equipment not conforming to ISDN standards, but instead to earlier standards. Examples include analogue telephones, computer terminals with an RS-232C interface, etc. Such terminal equipment can be used in an ISDN providing a terminal adaptor (TA) is used to provide the necessary conversion. TE2 connects to TA at the R reference point; TA connects to NT2 at the S reference point.

NT2 (network termination 2) designates devices such as PABXs, LANs, or terminal controllers, i.e. concentrators. TE1 (or TA) connects to NT2 at the S reference point, and NT2 connects to NT1 at the T reference point.

NT1 (network termination 1) designates the device which terminates the ISDN transmission line at the customers permises. NT1 connects to NT2 at the T reference point, and to the transmission line at the U reference point.

When NT2 is not used, TE1 (or TA) connects directly to NT1. In this case, the S and T reference points become one reference point which is referred to as the S/T reference point.

2.4.2.2 Central Office Equipment

LT designates the device that terminates the ISDN transmision line termination equipment at the central office. LT connects to the transmission line at the U reference point, and to the central office exchange at the V reference point.

ET designates the exchange termination equipment at the central office, and is analogous to a central office line or trunk circuit.

2.4.3 ISDN Access Structures

At the present time, two access structures have been defined in ISDN, namely:

- o basic rate access
- o primary rate access

Broadband (higher capacity) access structures are presently under definition.

2.4.3.1 Basic Rate Access

Basic rate access provides a subscriber with two B channels (each 64 Kbps) and one D channel (16 Kbps). As noted aove, B channels are information only channels and the D channel carries signalling and optionally packet data information.

The basic rate access structure can be applied to several situations, such as:

- o a subscriber line connection to a central office
- o a computer terminal connection to a data service
- o an extension line connection to a PABX (or KTS)
- o a computer terminal connection to a LAN
- * o a trunk connection from a PABX to a central office
- * o a line connection from a KTS to a central office
- * o a computer terminal connection from a LAN to a data service

* In this application, multiple basic rate access lines would usually be used.

The total bit rate for basic rate access is 192 Kbps, i.e. two B channels of 64 Kbps, plus one D channel of 16 Kbps, plus 48 Kbps of overhead.

All signalling for the two B channels is carried over the D channel using the LAP-D protocol, which is discussed later in the report.

2.4.3.2 Primary Rate Access

Primary rate access has been defined in two manners, namely:

- o 1536 Kbps for use in North America, Japan, and South Korea
- o 1920 Kbps for use elsewhere in the world

The usual example of primary access is that of multiple B channels and one D channel, as follows:

- o 23 B channels (each 64 Kbps) plus one D channel (64 Kbps) for application in North America, Japan, and South Korea
- o 30 B channels (each 64 Kbps) plus one D channel (64 Kbps) for application elsewhere

However, other channel configurations with a composite bit rate of 1536 (or 1920) Kbps are foreseen. Examples for North American application are as follows:

- o three H0 channels plus five B channels plus one D channel
- o four H0 channels
- o one H11 channel

Other channel configurations for application in Europe and elsewhere include:

- o four H0 channels plus five B channels plus one D channel
- o five H0 channels
- o one H12 channel

Signalling is carried out on the D channel using the LAP-D protocol, which is discussed later. CCITT also permits the use of Signalling System No. 7 between the PABX and the central office.

The D channel has the capacity to carry signalling information for more than 23 (or 30) B channels. In multiple primary rate access configurations, additional primary accesses can be configured as 24 B (or 31 B).

In the above scenarios, the specific channel arrangement would be fixed by the exchange carrier at the time of service subscription. A variable access configuration is also foreseen, whereby the user would use a portion of the composite bit rate, i.e. 1536 (or 1920) Kbps, as needed. For example, if a user wished to use a service requiring a B channel, he would be temporarily allocated 64 Kbps of the 1536 (or 1920) Kbps. If another user wished to use a service requiring an H0 channel, he would be temporarily allocated 384 Kbps of the 1536 (or 1920) Kbps. Standards for dynamic bit stream allocation have not yet been developed, but likely will be in the future.

Primary rate access can be applied to an number of situations, such as:

- PABX trunk connections to a central office (multiple B channels)
- LAN connections to a data service (multiple B channels)
- high speed data service connection
- high quality audio service connection
- video conference service connection

The line bit rate for primary rate access in North America, Japan, and South Korea is 1544 Kbps, i.e. 23 B channels of 64 Kbps plus one D channel of 64 Kbps (or other channel combinations) plus 8 Kbps of overhead, corresponding to the North American T1 bit rate. The line bit rate for primary access elsewhere is 2048 Kbps, i.e. 30 B channels of 64 Kbps plus one D channel of 64 Kbps (or other channel combinations) plus 64 Kbps of overhead, corresponding to the CEPT bit rate.

2.4.3.3 Broadband Access

Broadband (higher capacity) channel structures are presently being defined, and will be announced in the near future. H2, H3, H4, and H5 channels are foreseen. The channel rates have not yet been finalized; however, an H5 channel is expected to have a capacity of approximately 150 Mbps.

Broadband channels will primarily be used to support video services.

2.4.4 ISDN Reference Point Interfaces

2.4.4.1 R Reference Point

The R reference point is the interface between TE2 and TA. Since TE2 represents equipment conforming to existing standards, the R interface will vary with the type of terminal equipment used, i.e. various physical interfaces and protocols, and TA will provide the conversion to ISDN standards.

The R reference point is only foreseen for use in basic rate access.

2.4.4.2 S Reference Point

2.4.4.2.1 Basic Rate Access

The main characteristics of the S reference point for basic rate access are as follows:

(a) Wiring Arrangement

The wiring arrangement is an eight-wire metallic interface, as follows:

- o two wires for transmit
- o two wires for receive
- o two wires to optionally provide power to TE1 from NT2 (or from NT1)
- o two wires to optionally provide power from one TE1 to other TE1s attached to the same interface

Other powering arrangements are also permitted, and the specific arrangement is left to each National Administration to decide. Additional options include:

- o TE1 may be powered from NT2 (or NT1) in phanthom mode over the transmit and receive pairs.

- o TE1, NT2, or NT1 may each have its own power source; standby batteries may be provided for each of TE1, NT2, or NT1.

- o NT1 may take power from the central office, with or without a standby battery.

The maximum distance between a single TE1 and NT2 (or NT1) is 1000 m. Multiple TE1s (up to eight)

can be connected to one NT2 (or NT1). However, in this case, the maximum distance is reduced as illustrated in Figure 2-3 overleaf.

Terminal polarity may be reversed. However, in multiple terminal systems, all terminals must use the same polarity.

(b) Frame Structure & Line Coding

A 48-bit frame, consisting of four D bits, sixteen B1 bits, sixteen B2 bits, and twelve overhead bits, is transmitted every 250 microseconds, which results in a bit rate of 192 Kbps. Pseudo-ternary coding is used with 100% pulse width. A binary "1" is represented by no pulse, and a binary "0" is represented by a pulse. Subsequent "0" pulses alternate in polarity (alternate mark inversion but with "0" and "1" reversed). The final bit is a balance bit, and is either "0" or "1" such that the total number of "0" bits in the frame is an even number, thereby eliminating the dc component on the line.

2.4.4.2.2 Primary Rate Access

The S reference point specifications for primary rate access are the same as the T reference point specifications for primary rate access, described below in item 2.4.4.3.2.

2.4.4.3 T Reference Point

2.4.4.3.1 Basic Rate Access

The T reference point specifications for basic rate access are identical to those for basic rate access with the S reference point, except for the powering arrangements. Although the physical wiring arrangement is the same as for the S reference point, it is not envisioned that NT2 will take power from NT1. However, NT2 could provide power to TE1.

2.4.4.3.2 Primary Rate Access

The main characteristics of the T reference point for primary rate access are as follows:

FIGURE 2-3

ISDN TERMINAL ARRANGEMENTS

POINT-TO-POINT CONFIGURATION

(ONE TERMINAL)

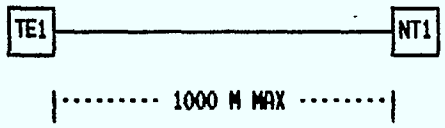

POINT-TO-MULTIPOINT CONFIGURATIONS

(MAXIMUM OF 8 TERMINALS)

SHORT PASSIVE BUS

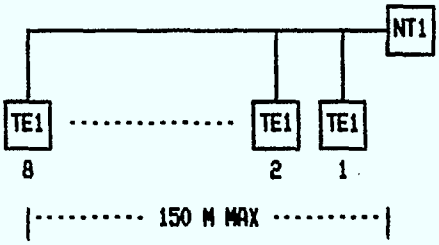

EXTENDED PASSIVE BUS

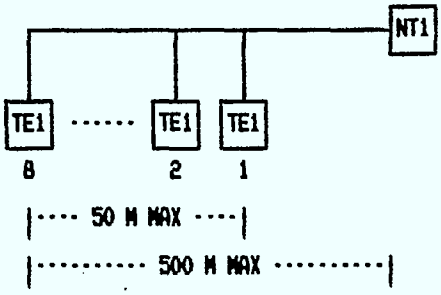

BRANCH EXTENDED BUS

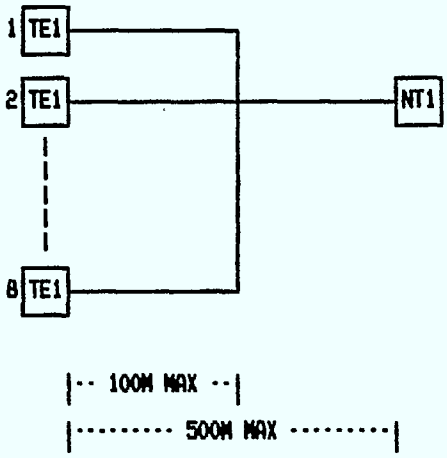

(a) Wiring Arrangement

Primary rate access requires a four-wire, point-to-point configuration. The transmission medium can be any one which permits transmission of data at the primary rate, i.e. 1.544 Mbps or 2.048 Mbps.

(b) Frame Structure & Line Coding

The primary rate access frame structure is based either on the North American DS-1 (1.544 Mbps) standard or the European CEPT (2.048 Mbps) standard.

The DS-1 signal has a frame length of 193 bits, which consists of one frame bit followed by 192 information bits (24 time slots of eight bits). Time slot 24 is used for the D channel. Frames are transmitted at the rate of 8,000 times per second, resulting in an overall rate of 1.544 Mbps. B8ZS line coding is to be used because of the all zeros constraint in T1 systems and to provide clear channel capacity.

The CEPT signal has a frame length of 256 bits, which consists 32 time slots of eight bits. Time slots are numbered from 0 to 31. Time slot 0 is for frame alignment; time slot 16 is for the D channel; remaining time slots are for B, H0, or H12 channels.

2.4.4.4 U Reference Point

2.4.4.4.1 Basic Rate Access

The description of the U interface specifications for basic rate access described hereafter is based on the T1D1.3 draft standard, dated 22 May 1987 for application in USA; some aspects may be changed in the final version.

CCITT is presently studying the proposed T1D1.3 U interface specifications. CCITT may adopt the T1D1.3 U interface specifications; on the other hand, since other proposals could be implemented, CCITT may choose to not recommend any standard for the U reference point. It is understood that CCITT is planning to issue two recommendations in the near future in respect of the U reference point in basic rate access, one concerning the digital transmission system (between NT1 and LT) and

another concerning the digital section (between the T and V reference points).

(a) Wiring Arrangement

Basic rate access requires a non-loaded single twisted-wire pair, i.e. a subscriber loop. The maximum distance is foreseen to be 18 Kfeet (5.5 Km); however, it is expected that this might be reduced to 10 or 12 Kfeet, if loop quality is not optimal.

A specific line polarity is not required, and the leads may be reversed.

At NT1, connection is made either via a miniature 8-pin jack or via a miniature 6-pin jack. In both cases, two pins are for the transmission line and two pins are reserved for local power feed; the remaining pins are not used.

(b) Frame Format & Line Coding

Transmission on the single twisted-wire pair is full duplex. A digital echo canceller with hybrid is employed at each end of the transmission line to eliminate near-end reflections.

The bit rate in each direction is 160 Kbps, consisting of two 64 Kbps B channels, one 16 Kbps D channel, and 16 Kbps for operations, administrations, and maintenance purposes.

Signalling is accomplished using a four-level pulse amplitude signal. Two bits are transmitted by each pulse (or quaternary symbol), and the coding scheme is called 2B1Q (two bits per one quaternary baud); hence, the baud rate is 80 Kbaud. The relationship between bits transmitted and pulses on the line is as follows:

First Bit	Second Bit	Quaternary Symbol	Pulse Voltage
1	0	+3	+2.40 v
1	1	+1	+.833 v
0	1	-1	-.833 v
0	0	-3	-2.40 v

Each frame, transmitted every 1.5 msec., consists of 120 quaternary symbols, used as follows:

- o first 9 symbols: synchronization
- o next 108 symbols: 216 bits of customer information (from 2B+D channels)
- o last 3 symbols: 6 bits for maintenance and other purposes (M bits)

Eight frames constitute a superframe. Each superframe has 48 M bits, of which 24 bits are used for a 2 Kbps embedded operations channel, and the remaining 24 are used for:

- o cyclic redundancy check (CRC)
- o far end block error (to report CRC errors)
- o line activation and deactivation
- o NT1 power status

The 2 Kbps embedded operations channel supports operations communications between the network and NT1. The embedded operations channel has capacity for 256 different coded messages, of which only eight have been assigned for the following functions:

- o NT1 loopback of B1, B2, or 2B+D channels
- o NT1 return of corrupt CRCs

2.4.4.4.2 Primary Rate Access

The U reference point specifications for primary rate access are identical to the T reference point specifications for primary rate access.

2.4.4.5 V Reference Point

The 1984 CCITT Recommendations provided initial functional definitions for five different V reference point configurations, V1 to V5. Physical interface specifications were not specified in 1984.

During the 1985 to 1988 study period, CCITT work continued to further define the V interfaces, and opposing views on the desirability of having fully defining physical specifications emerged. The current draft CCITT Recommendations propose four V interfaces, which are named V1, V2, V3, and V6,

still without physical interface specifications. The four proposed V interfaces are summarized as follows:

- o V1: 2B+D for basic rate service; the wiring arrangement is undefined
- o V2: DS-1 or higher rate between a remote concentrator and a central office
- o V3: DS-1 or higher rate between a PABX and central office
- o V6: DS-1 rate in other fixed multiplex applications

2.4.5 Access Media

2.4.5.1 Basic Rate Access Media

Non-loaded twisted pairs will be the usual medium used for basic rate access. In situations which require cable length in excess of that possible with non-loaded twisted pairs, repeaters may be used (either at the U or S reference points). The U repeater might be used to extend the distance between LT and NT1; the S repeater might be used to extend the distance between NT2 and TE1.

Radio systems could be also applied to basic rate access systems. These could be point-to-multipoint systems or very low capacity point-to-point systems.

2.4.5.2 Primary Rate Media

Possible media for primary rate access include:

- o digital cable carrier
- o fibre optics
- o low and medium capacity point-to-point digital radio
- o laser communications

2.5 ISDN Signalling

2.5.1 OSI Reference Model

In the 1970s, ISO developed the open systems interconnection (OSI) reference model, which is a structured philosophy for interconnection and information exchange between users in a data communications system.

The OSI reference model is structured vertically into seven hierarchial layers, each layer having a defined subset of functions. Each layer relies on the next lower layer to perform more primitive functions and each layer provides services on behalf of the next higher layer.

Distributed processing systems adhering to the OSI reference model have their communications software layered identically, and communication takes place between peer layers. The concept of peer layer communication is shown in Figure 2-4 overleaf. One major advantage of this approach is that software development is modularized, and changes in one module (or layer) can be made without affecting the other modules (or layers).

The functions of the seven layers are as follows:

- Layer 1 - Physical Layer

  The Physical Layer, the lowest layer, includes the physical interface with the transmission line. Functions performed by Layer 1 include:

  - signal voltage level
  - bit timing
  - pulse duration
  - synchronization

- Layer 2 - Data Link Layer

  The Data Link Layer contains the procedures to transfer messages across the link to the next node (not end-to-end). Functions performed by Layer 2 include:

  - frame formatting
  - link addressing
  - error checking
  - flow control

FIGURE 2-4

OSI REFERENCE MODEL

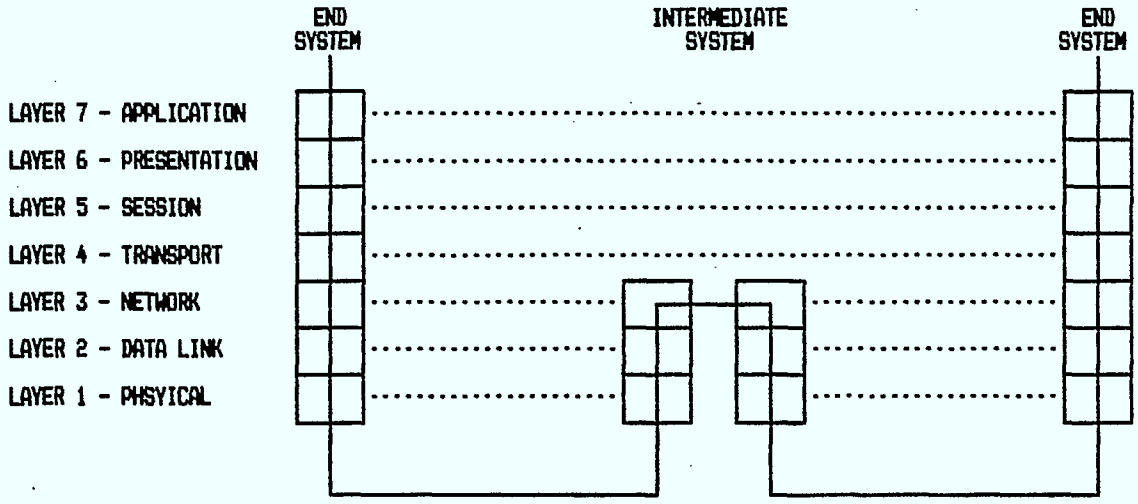

LEGEND

——— - PHYSICAL COMMUNICATION PATH

····· - TRANSPARENT PEER LAYER COMMUNICATION PATH

- Layer 3 - Network Layer

  The Network Layer is responsible for establishing, maintaining, resetting, and terminating connections between end parties. Functions performed by Layer 3 include:

  - route selection
  - end-to-end connection
  - end-to-end disconnection

- Layer 4 - Transport Layer

  The Transport Layer separates the higher layer user (network-independent) protocols from the lower layer network services and ensures end-to-end flow of information. Functions performed by Layer 4 include:

  - definition of circuit parameters
  - end-to-end error control
  - end-to-end message integrity

- Layer 5 - Session Layer

  The Session Layer is the first of the higher layers associated with communications between users. Functions of Layer 5 include:

  - logging on and off
  - verification of passwords and authorization codes
  - establishing the communications mode, i.e. full duplex, half duplex, one way
  - providing recovery service

- Layer 6 - Presentation Layer

  The Presentation Layer is responsible for data syntax, and resolves differences in data format and representation. Layer 6 functions include:

  - data code conversion
  - data encryption
  - display format control

- Layer 7 - Application Layer

  The Application Layer is the part of the system seen by the user. Layer 7 functions include:

- processing user requests
- obtaining data from data bases
- terminal emulation

The OSI reference model has been adopted by CCITT as Recommendation X.200.

2.5.2 ISDN Network Signalling

CCITT Signalling System No. 7 (SS7) is a method of common channel signalling for telephone networks wherein all signalling information is carried in packet format on 64 Kbps channels separate from the channels used for information transfer. The CCITT Q-Series of Recommendations describe the manner in which SS7 is to function. The Q-Series Recommendations leave certain aspects open to the national administrations. Telecom Canada and AT&T have selected certain options for their networks, and the combination of these options with SS7 is referred to as CCS7. SS7 has been selected as the method of network signalling in ISDNs. Many telephone companies are also implementing SS7 networks in their existing telephone networks.

A SS7 network consists of four elements, usually duplicated for greater reliability, namely:

- o signalling point (SP), which is the interface between each switch and the SS7 network
- o signal transfer point (STP), which is a node in the SS7 network
- o network control point (NCP), which is a central data base from which all signalling instructions are obtained, usually co-located with one STP
- o signalling link, which is 64 Kbps channel interconnecting SPs with STPs and also STPs with the NCP

SS7 has a layered architecture. However, instead of being structured per the seven OSI layers, it is structured into four levels. The three lower levels, collectively referred to as the message transfer part (MTP), follow the OSI model quite closely and are responsible for transferring signalling messages through the network. The fourth level appears to the MTP as a user level and performs message assembly and disassembly.

Three main types of user messages are accomodated, namely:

- o ISDN user messages (including telephone and data user messages)
- o signalling connection control messages
- o MTP management messages

CCITT has been attempting to define the manner in which supplementary services are to be handled by the ISDN user messages. However, more definition is still required and recommendations are not likely to be published until 1992.

2.5.3 ISDN Access Signalling

Although SS7 has been selected as the method of network signalling in an ISDN, CCITT has specified another (although related) layered method of signalling in the access system.

The functions encompassed in the four highest layers (end-to-end functions) are only provided in the terminal equipment, and have not been specified in detail by CCITT.

The three lower layers have been defined in detail by CCITT, and are described below. Note that from exchange to exchange, signalling through the network is performed by SS7, and the Layer 3 access protocol appears as the user to SS7. Reference is made to Figure 2-5 overleaf, which illustrates the layered signalling process from terminal to terminal.

2.5.3.1 Layer 3 (Network Layer) Access Protocol

The Layer 3 access protocol provides the means to establish, maintain, and terminate network connections between application entities in an ISDN, and is specified in CCITT Recommendation Q.931 (I.451). The Layer 3 protocol exchanges four types of messages with Layer 2, namely:

- o call establishment messages
- o call information phase messages
- o call disestablishment messages
- o miscellaneous messages

FIGURE 2-5

TERMINAL-TO-TERMINAL SIGNALLING

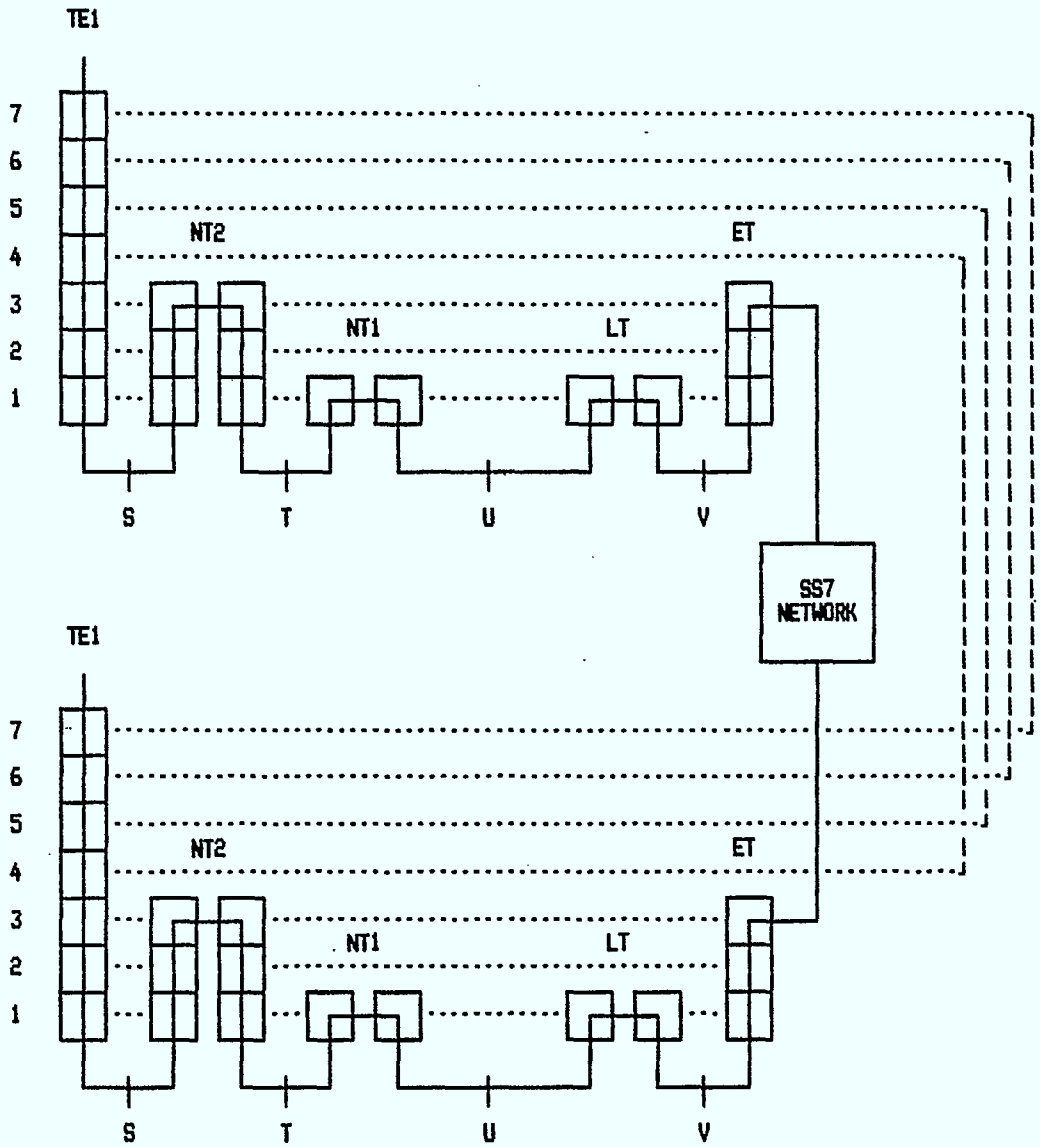

LEGEND

——— - PHYSICAL COMMUNICATION PATH

····· - TRANSPARENT PEER LAYER COMMUNICATION PATH

2.5.3.2 Layer 2 (Data Link Layer) Access Protocol

The Layer 2 access protocol contains the necessary procedures to transfer messages between Layer 3 entities on the D channel. The protocol used is called Link Access Procedure for the D channel (LAP-D). The LAP-D protocol is an extension of the Link Access Procedure - Balanced (LAP-B) protocol used for data link control in X.25; LAP-B in turn was based on OSI's High Level Data Link (HDLC) protocol. In LAP-B, only one logical link may be established across an interface. In LAP-D, it is possible for multiple logical links to exist simultaneously. Multiple logical are required in ISDN, because the D channel must:

- in the case of basic rate access, carry signalling information for each of the B channels plus D channel packet information
- in the case of primary rate access, carry signalling information for each of the B, HO, H11, or H12 channels.

The LAP-D frame structure is illustrated overleaf in Figure 2-6. The LAP-D frame can be either 128 or 256 bytes long, and contains the following fields:

- start flag
- address field, indicating the data link connection identifier (DLCI), i.e. the logical link to which the message applies, which consists of two sub-fields, namely:
  - service access point indentifier (SAPI)
  - terminal endpoint indentifier (TEI)
- control field, identifying the type of frame, i.e. information, supervisory, or unnumbered
- information field, with the Layer 3 header at the start of the information field
- cyclic redundancy check (CRC), to detect transmission errors
- end flag

FIGURE 2-6

LAP-D FRAME STRUCTURE

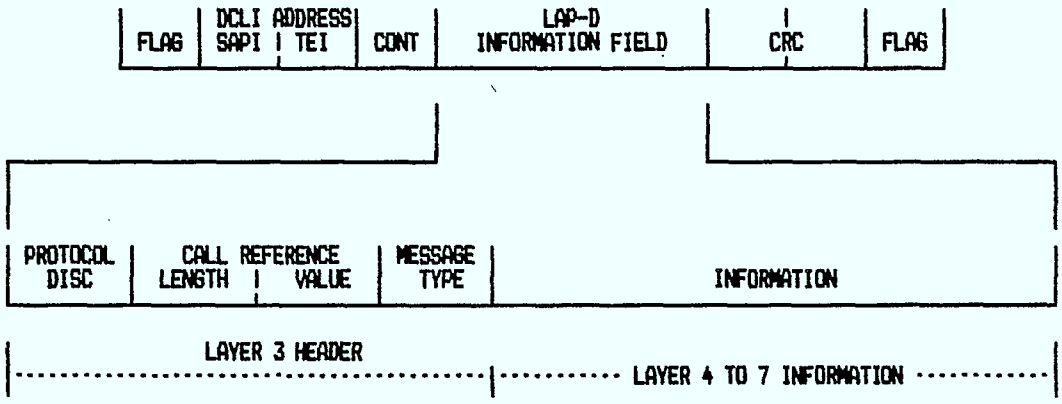

LEGEND

LAP-D - LINK ACCESS PROCEDURE FOR THE D CHANNEL

FLAG - A 01111110 BIT PATTERN TO SIGNAL THE START AND END OF THE FRAME

DCLI - DATA LINK CONNECTION IDENTIFIER TO IDENTIFY THE LOGICAL LINK

SAPI - SERVICE ACCESS POINT IDENTIFIER, THE FIRST PART OF THE DCLI

TEI - TERMINAL ENDPOINT IDENTIFIER, THE SECOND PART OF THE DCLI

CONT - CONTROL FIELD FOR TYPE OF FRAME, I.E. INFORMATION, SUPERVISORY, OR UNNUMBERED

CRC - CYCLIC REDUNDANCY CHECK TO INDENTIFY TRANSMISSION ERRORS

DISC - PROTOCOL DISCRIMINATOR, IDENTIFYING THE PROTOCOL BEING USED, I.E. Q.931, X.25, ETC.

The Layer 3 header in the information field consists of the following elements:

- o protocol disciminator, which identifies the type of protocol used, i.e. Q.931, X.25, etc.
- o call reference, indentifying the call to which the message applies, which consists of two sub-fields, length and value
- o message type, which specifies the message function, i.e. setup, disconnect, etc.

2.5.3.3 Layer 1 (Physical Layer) Access Protocol

The Layer 1 access protocol varies with the specific reference point and the access rate, as is described in Section 2.4.4 above.

In the case of the S or T reference point in basic rate access, the Layer 1 frame has 48 bits, which consists of four D bits, sixteen B1 bits, sixteen B2 bits, and twelve overhead bits. Each Layer 1 frame transmits four bits of the LAP-D frame.

In the case of the S or T reference point in primary rate access, the Layer 1 frame has 193 (or 256) bits, and each Layer 1 frame transmits eight bits of the LAP-D frame.

2.5.4 OSI & ISDN Information Transfer

ISDN access systems are layered on two levels, namely:

- o user level
- o control level

The discussion in Section 2.5.3 described the layered process within the control level. A higher level of layering occurs in the user level. A description of user level layering, and its relationship to control level layering follows.

The user, wishing to use a B channel, makes his request known to User Layer 7. The request is then processed down to User Layer 3 (User Network Layer), which is responsible for call setup. User Layer 3 then calls upon the control level, i.e.

User Layer 3 is the application entity to the control level.

The control level sets up the B channel call as was described in Section 2.5.3. Upon call setup, User Layer 3 transfers B channel information to User Layer 2, which in turn transfers it to Layer 1. Layer 1 is common to both the user and control levels. User Layer 2 places the B channel bits in the Layer 1 frame, and Control Layer 2 (LAP-D) places D channel bits in the Layer 1 frame.

2.6 ISDN Numbering

2.6.1 ISDN Numbering Plan

The numbering plan format for an ISDN is specified in CCITT Recommendation E.164 (I.330), and is an expansion of the existing telephony numbering plan described in CCITT Recommendation E.163. The ISDN international numbering plan is structured as follows:

- o country code: 1 to 3 digits
- o national destination code: 5 to 3 digits
- o subscriber code: up to 9 digits
- o sub-address code: up to 40 digits

The number of digits for the country code and the national destination code cannot exceed six digits. The total number of digits for the international number is variable but cannot exceed fifteen digits (not including the digits in the sub-address). The national destination code may be replaced by a network identification code.

Three methods are available for indentification of specific terminals at a given ISDN interface, namely:

- o terminal compatibility: only those terminals which are compatible with the incoming service may respond to the call, e.g. if a digital telephone and a data terminal share an interface, the digital telephone would take incoming voice calls and the data terminal would take incoming data calls
- o direct dialling-in: multiple terminal on a given interface are identified through the use of separate E.164 numbers
- o sub-address: a sub-address of up to 40 digits can be used to identify a specific terminal connected to a given interface

An ISDN is to be able to interwork with other ISDNs and the existing telephony, packet, and telex networks, which have different numbering plans.

2.6.2 Telephony Network Numbering Plan

The telephony numbering plan is specified in CCITT Recommendation E.163, and has the following structure:

- country code: 1 to 3 digits
- national destination code: 5 to 3 digits
- subscriber code: up to 6 digits

The total number of digits for the international number cannot exceed twelve.

2.6.3 Packet Network Numbering Plan

The numbering plan for packet networks is specified in CCITT Recommendation X.121, and has the following structure:

- country code: 3 digits
- network code: 1 digit
- terminal code: up to 10 digits

2.6.4 Telex Network Numbering Plan

The numbering plan for the telex network is specified in CCITT Recommendation F.69, and has the following structure:

- destination code: 1 to 3 digits, identifying the country or network within a country
- subscriber code: unrestricted, but in practice 5 to 7 digits

2.7 ISDN Evolution

Narrowband ISDN, i.e. basic and primary rate, can be considered as the first step toward broadband ISDN, wherein customers will ultimately have integrated demand access to voice, audio, data, image, and video services.

At the present time, operating companies have separate networks for circuit, packet, and video services. It is foreseen that, with the advent of fast packet switching, the circuit and packet networks will be integrated. In the future, after switching technology further evolves, all services are expected to be accomodated in one network.

3.0 CANADIAN TRADE OBLIGATIONS

Numerous issues must be resolved before ISDN can be implemented in Canada, and these are discussed later in the report. As will be seen, some of the implementation issues foreseen relate to equipment supply. Issues related to the supply of equipment must be evaluated from several points of view, one of which is Canada's trade obligations with USA and other countries. Hence, a brief analysis of Canada's trade obligations is presented.

3.1 GATT Agreement

The General Agreement on Tariffs and Trade (GATT) is a multilateral trade agreement developed in public fora by most of the industrialized nations in the world. Canada and USA are participants in GATT and are signatories to the GATT codes.

In 1979, at the Tokyo Round of Multilateral Trade Negotiations, the GATT members adopted a new code in respect of technical barriers to trade. The main points of the code which are relevant to telecommunications are paraphrased as follows:

- Central government bodies are to ensure that technical regulations are not prepared, adopted or applied with a view to creating obstacles to international trade.

- Where national technical regulations or standards are required and international standards exist (or are in preparation), central government bodies are to use the international standards as the basis for the national technical regulations or standards, except where a legitimate domestic objective can be demonstrated.

- With a view to harmonizing the technical regulations and standards on as wide a basis as possible, central government bodies are to play a full part in the preparation of international standards by appropriate international standardizing bodies.

- Central government bodies are to specify technical regulations and standards in terms of performance, rather than design or descriptive characteristics.

- Central government bodies are to take reasonable measures to ensure that local government bodies and non-government bodies comply with the code.

In subsequent GATT ministerial meetings, it has been recognized that further rules definition is needed in respect of technical barriers, and that advanced technology products pose special problems which should be examined with a view toward determining the desirablility or feasibility of adopting GATT codes or guidelines in this area of trade. It is probable that codes specifically for advanced technology products, such as computer and telecommunications products, will be implemented by GATT in the future.

3.2 Canada - US Free Trade Agreement

The Canada - US Free Trade Agreement, which has yet to be ratified by both governments, deals with technical standards in Chapter 6. The following excerpts appear to be particularly relevant to the Canadian telecommunications industry:

- Article 602: Affirmation of the GATT Agreement

  The Parties affirm their respective rights and obligations under the GATT Agreement on Technical Barriers to Trade.

- Article 603: No Disguised Barriers to Trade

  Neither Party shall maintain or introduce standards-related measures or procedures for product approval that would create unnecessary obstacles to trade between the territories of the Parties. Unnecessary obstacles to trade shall not be deemed to be created if:

  a) the demonstratable purpose of such a measure or procedure is to achieve a legitimate domestic objective

  b) the measure or procedure does not operate to exclude goods of the other Party that might meet that legitimate domestic objective

- Article 604: Compatibility

  To the greatest extent possible, and taking into account international standardization activities, each Party shall make compatible its standards-related measures and procedures for product approval with those of the other Party.

- Article 605: Accreditation

  Each Party shall provide for recognition of the accreditation systems for testing facilities, inspection agencies and certification bodies of the other Party.

  Neither Party shall require as a condition for accreditation that testing facilities, inspection agencies or certification bodies be located or established in or make decisions within its territory.

- Article 606: Acceptance of Test Data

  Each Party shall provide, upon request, a written explanation whenever any of its federal government bodies is unable to accept from bodies located in the territory of the other Party test results that are needed to obtain certification or product approval.

- Article 607: Information Exchange

  Each Party shall promptly provide the other Party with full texts of proposed federal government standards-related measures or product approval procedures published in official journals in sufficient time to provide persons of the other Party with at least 60 days to develop comments and discuss them with the appropriate regulating authority prior to submitting the comments.

- Article 608: Further Implementation

  The Parties shall, as may be appropriate to further the objectives of this Chapter, undertake negotiations with respect to:

  a) making compatible standards-related measures and product approval procedures

  b) accreditation

  c) acceptance of test data

- Article 609: Definitions

For purposes of this Chapter:

- Accreditation means a formal recognition of competence to carry out specific tests or specific types of tests, including authorization to certify conformity with standards or technical specifications, by means of a certificate of conformity or mark of conformity

- Legitimate Domestic Objective means an objective whose purpose is to protect health, safety, essential security, the environment, or consumer interests

- Make Compatible means the process by which differing standards, technical regulations or certification systems of the same scope which have been approved by different standardizing bodies are recognized as being either technically identical or technically equivalent in practice

- Product Approval means a federal government declaration that a set of published criteria has been fulfilled and therefore that goods are permitted to be used in a specific manner or for a specific purpose

- Standards-Related Measures include technical specifications, technical regulations, standards and rules for certification systems that apply to goods, and processes and production methods

- Testing Facility means a facility that inspects, measures, examines, tests, calibrates or otherwise determines the characteristics or performance of materials or goods

3.3 Trade Agreement Implications

Canada and USA, in becoming signatories to the GATT code on technical barriers to trade, have in principle undertaken to administer their technical regulations and standards, including testing and certification standards, so as to minimize any unnecessary restrictive effects on imported goods. However, because there are special problems with advanced technology products and further rules definition is expected from GATT in the future, it

would appear that there is no urgency within GATT at present to remove differences in standards for telecommunications products. This is, however, likely to change in the future, after GATT codes for advanced technology products are established.

The Canada - US Free Trade Agreement endorses the GATT code on technical barriers to trade, and specifically mentions telecommunications equipment as an item of equipment to be dealt with.

3.3.1 Existing Standards

The Canada - US Free Trade Agreement will require Canada and USA to endeavour, to the maximum extent possible, to remove any differences that presently exist in certification standards and procedures for telecommunications equipment. All existing Canadian and USA standards and procedures for radio and terminal equipment certification will have to be examined, and where differences exist, the two countries will be obliged to remove the differences, unless a legitimate domestic objective can be demonstrated.

For example, Canada's certification standard for terminal equipment attached to the public telecommunications system is CS-03. In the USA, the corresponding certification standard is FCC Part 68. There are differences between the two documents. In some cases, CS-03 is more stringent, while, in other cases, Part 68 is more stringent. It shall be necessary for Canada and USA to try to harmonize the two documents to the maximum extent possible.

It is interesting and encouraging to note that efforts are being made by Canada to harmonize the regulations for electomagnetic interference (EMI) standards with those of the USA.

There will also be a need to examine existing telecommunications technical regulations and standards which have been established by the provincial and municipal government bodies, i.e. the PUBs, and by non-government bodies, i.e. the major telecommunications companies, to determine whether these technical regulations and standards comply; where the existing standards do not comply, it will be necessary to encourage the PUBs and telecommunications companies to revise them.

3.3.2 New Standards

The GATT Agreement, and in turn the Canada - US Free Trade Agreement, requires that, where new standards are required, the two countries must endeavour, to the maximum extent possible, to achieve common standards by using standards which have been (or are being) established by the international standards organizations as the basis. In telecommunications matters, this means that Canada and USA should adopt the CCITT and CCIR Recommendations to the maximum extent possible. Since Canada and USA are active contributors to CCITT and CCIR, it is expected that they will both endorse the CCITT and CCIR Recommendations to the maximum extent possible.

Problems could potentially arise in areas where the CCITT and CCIR Recommendations optionally leave matters to be decided by the National Administrations, or in areas where CCITT and CCIR have not issued any Recommendations. Special care will have to be taken by Canada and USA to ensure that the spirit of the Free Trade Agreement is upheld. The only exception is where a legitimate domestic objective can be demonstrated.

The country to first introduce an entirely new standard will have an advantage over the other. Since the USA is a leader in many areas, there will be the danger that standards introduced in USA will then have to be adopted in Canada. This situation, however, can be mitigated by increased involvement by the DOC and industry in general at the early stages, so that both countries participate in the decision making process.

There will also be a need for the DOC and FCC to co-ordinate more closely to ensure that neither unwittingly takes a decision which will create a technical barrier to trade.

In Canada, the PUBs establish standards in their respective provinces. There will be a need for closer monitoring of the PUBs than in the past to ensure that telecommunications standards decisions made by the PUBs are not in violation of the Canada - US Free Trade Agreement.

Likewise, there will also be a need to more closely monitor the major telecommunications companies to ensure that they do not take any decisions that are in violation of the Canada - US Free Trade Agreement.

A question of interpretation may arise in respect of differing technologies in telecommunications products, i.e.:

> Does the Agreement mean that Canada and USA should endeavour to adopt common technolgies so that products are compatible and can be used in both countries?
>
> or
>
> Is each country free to select its own technologies provided that each country gives equal market access to the other country?

If the former is correct, use of the same technologies in telecommunications would imply that:

- Canada and USA should adopt the same cellular radio technology for the next generation of cellular radio.
- Canada and USA should both use the same U interface specification in ISDN basic rate access.

Bartek understands that each country may select its own technology, providing the reason for doing so is to fulfill a legitimate national objective. The DOC may wish to obtain an informed opinion on this point. However, despite which interpretation is correct, both countries will have to be careful to ensure that artificial barriers to trade are not established when new technologies are being introduced.

3.3.3 Effect on the DOC

The GATT Agreement and the Canada - USA Free Trade Agreement, if ratified, will have the effect that neither Canada nor USA will be able to make telecommunications decisions in isolation. There will be a need for an increased awareness of trade obligations at all government levels, as well as in the private sector.

In Canada, the task of co-ordinating with the USA and monitoring the activities of the PUBs and the telecommunications companies will undoubtedly fall to the DOC. It will, therefore, be necessary for the DOC to assign qualified staff to undertake the

various co-ordination and monitoring functions described above. This will result in an expansion of the role of the Federal GATT Co-ordinator for telecommunications.

The federal, provincial, and territorial Ministers responsible for communications are attempting to establish a national communications policy for Canada. This is most encouraging because a uniform national communications policy will help to ensure that trade agreement violations are avoided.

4.0 ISDN IMPACT ON RADIO FREQUENCY SPECTRUM

4.1 Digital Radio Systems in ISDN

Digital radio systems will be used in ISDNs in two ways, namely:

- o to provide transport between exchanges within an ISDN
- o to provide access to an ISDN

This section of the report examines the use of radio in both ISDN transport and access systems; however, the emphasis has been placed on access systems.

4.1.1 Radio Transport Systems

Radio systems, both fixed terrestrial and fixed satellite (as well as cable carrier and fibre optic systems), are used today for transport between exchanges; both analogue and digital radio systems are used. The trend is toward increased use of digital transport systems, because they can be integrated with digital exchanges, resulting in significant cost savings. The trend is independent of ISDN. However, the existence of integrated digital networks makes it possible for operating companies to offer integrated services.

The digital radio transport system used in an ISDN will not be different from an RF point of view from the digital radio transport system of today. Technological advances in radio equipment will be implemented, but these would occur irrespective of ISDN. The only aspect of transport systems that will be affected is the multiplex and signalling equipment, as follows:

- o As SS7 systems are implemented, clear channel capability (64 Kbps instead of 56 Kbps) will become available in transport systems.
- o Whereas presently the channel multiplex allocations are fixed, e.g. a DS-1 signal has 24 channels of 64 Kbps, the channel allocations will vary dynamically with the services requested. This will result in more efficient use of radio capacity and, in turn, radio frequency spectrum.

Although ISDN will not directly affect digital radio transport systems in an RF sense, a question that must be asked is whether ISDN will stimulate a need for more, and higher capacity, digital systems. In Bartek's view, the increase in the demand for information, and in turn bandwidth, is occuring irrespective of ISDN. Through integration of services, ISDN will help us to deal with the demand more efficiently. Nevertheless, although ISDN per se will not cause increase demand for bandwidth, it is certain that the demand for bandwidth will continue to increase and practical solutions must be found.

Significant use of fibre optic systems is expected to be made for transport purposes in broadband ISDN, not just for intra-city communications but also for inter-city communications. Eventually, fibre optic networks will extend across the country. Such networks will be the main transport system for broadband ISDN. When this occurs, the demand for radio frequency spectrum to support radio transport systems will be mitigated.

Fibre optic systems, being cable systems, are vunerable, and some form of redundancy will be required. It is understood that Canada's major telecommunications companies see fixed radio (terrestrial and satellite) systems as providing the required redundancy. However, the need for radio redundancy may only be a short term requirement. As more fibre optic systems are implemented, route diversity will become available within each fibre optic network. Further, since Telecom Canada and CNCP are both implementing fibre optic networks, perhaps each could provide additional redundancy for the other. This would reduce the need for radio systems (both fixed terrestrial and fixed satellite) for redundancy in transport systems.

The question of the extent to which fixed radio (terrestrial or satellite) should be used in public telecommunications systems therefore becomes a policy question rather than a technical question. The choices to be made by the major telecommunications companies will be directly influenced by the radio licensing policies established by the DOC. If the radio licensing policy is liberal, more radio systems will be used; if the licensing policy is conservative, more fibre optic systems will be used.

A final consideration is that public demand for ISDN (both narrrowband and broadband) will be governed by the tariffs which have yet to be established. If the cost is low, public demand will be high; if the cost is high, the demand will be low. At this point, we do not know at what level ISDN services will be tariffed, and hence we cannot accurately predict the demand that will result.

Therefore, in view of the following:

- the broadband ISDN rates have not yet been finalized
- the demand for ISDN services, in particular broadband ISDN, is somewhat uncertain
- increased use of fibre optic systems will mitigate the requirement for radio transport systems

it is not possible to quantitatively predict the requirements for radio frequency spectrum in transport systems in, say, the year 2000. It is therefore felt that it would premature for the DOC to make firm plans regarding rearrangement of existing bands. The best that can be done at this time is to monitor the situation closely in the coming years. The DOC may wish to conduct studies periodically in this regard.

4.1.2 Radio Access Systems

Radio systems will be used to provide access to an ISDN in mobile applications as well as in fixed applications where twisted pair, cable carrier, or fibre optic systems are not feasible. The radio systems that can be used for ISDN access include:

- mobile radio
  - cellular radio
  - trunked radio
  - mobile satellite
  - personal radio
- fixed radio
  - point-to-point terrestrial radio
  - point-to-multipoint terrestrial radio
  - point-to-point satellite
  - point-to-multipoint satellite

It is expected that the mobile radio systems will only be used for basic rate access. The fixed radio systems will be used to provide both basic rate and primary rate access. The fixed radio systems could also be used to provide broadband access; however, because of the large bandwidth requirements, it is expected that fibre optic systems will primarily provide broadband access.

As with transport systems, it is not expected that ISDN per se will create a demand for additional radio frequency spectrum; rather, the demand will occur from the growing need for more information, and in turn more bandwidth. ISDN will help us deal with the demand more efficiently.

As ISDN is introduced to subscribers in the wired networks, subscribers using radio access (mobile and fixed) will begin to demand services similar to those offered in the wired networks. It is expected that cellular radio (and in the future personal radio) will see the greatest demand for ISDN services.

The implications of using mobile and fixed radio for ISDN access are examined in later sections of the report.

4.2 Frequency Spectrum Congestion

The use of radio has increased drastically in recent years, in mobile and fixed applications. As frequency spectrum has been used up, the trend has been to use higher and higher frequencies. The higher frequencies can usually be accomodated in fixed systems, as they can be engineering and designed to operate at the higher frequencies, albeit at higher cost. Also, fibre optic systems are becoming an increasingly viable alternative to fixed radio systems. A different situation exists with mobile radio.

The mobile radio environment is such that the use of frequencies above 3 GHz appears to not be feasible. Current thinking is to shift the fixed systems to the higher frequencies and to use the lower frequencies for mobile services. This would provide some spectrum for mobile services; however, even if all fixed systems were shifted to the higher frequencies, the lower spectrum would still eventually be used up by mobile services. Consequently, spectrum conservation in mobile services is being investigated in two ways, namely:

- greater frequency reuse
- use of less bandwidth per channel

Radio communication with a non-stationary mobile radio is fraught with numerous propogation problems. Multiple reflected and obstructed signals are received, as well as interfering signals from other radios. The received signals vary in amplitude and phase as the mobile moves from place to place.

The first mobile radios were analogue and only carried voice. Although these systems were subject to varying path conditions, the redundancy in human speech tended to compensate for momentary transmission errors. However, when data was transmitted (initially by using voice band modems and later by directly modulating the carrier), it found that data was very susceptible to the varying path conditions. Various techniques to deal with these problems were developed. However, the consequence of these techniques is that the bit rate available to the user is reduced.

Despite the problems associated with digital modulation over mobile radio, there are numerous advantages, such as:

- o integration of voice and data services
- o control and signalling easily combined with the information signal
- o greater tolerance to radio interference

Considerable effort has been focused on finding modulation techniques and access methods which are most immune to multipath conditions.

4.2.1 Frequency Reuse

Improvement in frequency reuse in mobile radio comes from reducing the size of the cells and by reducing the cell cluster size. Reducing the cell size is achieved by reducing transmit power. The limit to which the cluster size can be reduced is governed by the carrier-to-interference ratio that the particular modulation scheme can tolerate.

The radio access method used also affects the cluster size. Access methods under consideration for cellular systems, include:

- o frequency division multiple access (FDMA)
- o time division mutiple access (TDMA)
- o code division multiple access (CDMA)

FDMA is the most mature method and has been employed for many years.

TDMA appears to offer advantages in system flexibility and implementation. TDMA allows the use of common equipment at the base station, thereby greatly reducing base station costs. TDMA permits greater frequency reuse than FDMA.

CDMA requires less co-ordination between base stations and the system control; further, CDMA can operate with smaller clusters than can FDMA and TDMA. On the other hand, CDMA requires more precise power control. Also, it is a much newer technology than FDMA and TDMA, and its technical and economic potential still must be demonstrated in a practical environment.

4.2.2 Bps/Hz Ratio

Digital modulation techniques that use constant envelope have a bit rate/bandwidth ratio of about 1 bps/Hz. Other digital systems which use linear modulation are able to achieve 2 bps/Hz.

However, the constant envelope systems appear to be more immune to the multipath conditions, and therefore require less overhead bits for reliable data transmission. Also, an improvement in the bps/Hz ratio generally results in a decrease of the carrier-to-interference ratio.

4.2.3 Voice Compression

Extensive R&D effort has also been focused on reducing the bit rate required for good quality digitized voice, thereby reducing the amount of bandwidth needed. As this technology will have a major influence on mobile radio systems in the future, a detailed discussion of this technology follows:

4.2.3.1 Mean Opinion Score

The Mean Opinion Score (MOS) is a subjective measure of digital voice quality. The MOS scale is as follows:

- o 5 - excellent quality
- o 4 - good (toll) quality
- o 3 - fair quality
- o 2 - poor quality
- o 1 - bad quality

4.2.3.2 Mature Voice Compression Techniques

Pulse code modulation (PCM) is the method most commonly used to digitize voice in public telecommunications systems. Without compressing the dynamic range, twelve bit samples are required 8,000 times per second to achieve an MOS of 5.0. This results in a bit rate of 96 Kbps.

Two logarithmic methods of compressing the dynamic range are used, namely:

- o A-law, a European method
- o Mu-law, a North American method

Both methods result in an MOS of 4.3, and use an eight bit sample. At a sampling rate of 8,000 times per second, the bit rate is 64 Kbps.

Adaptive differential PCM (ADPCM) is a technique whereby the binary difference between two samples is transmitted. The difference is transmitted with a four bit sample, and at a sampling rate of 8,000 times per second, the bit rate is 32 Kbps. ADPCM has an MOS of 4.1.

The A-law PCM, Mu-law PCM, and ADPCM techniques have been standardized.

4.2.3.3 New Voice Compression Techniques

Considerable R&D effort is being expended to develop methods to providing good quality digitized voice at lower bit rates. There are a number of approaches; however, the two approaches that appear to hold the most promise are:

- Wave Form Coding

  Wave form coding techniques extract the fundamental frequencies, code the residual harmonics and forward the fundamental and harmonic information separately. Wave form coding techniques attempt to reconstruct the wave form as closely as possible from the fundamental and harmonic information transmitted. Linear predictive coding (LPC) is used to speed up extraction of the fundamental frequency. Some systems transmit the data using a code book.

  Examples of wave form coding include:

  - adaptive predictive coding (APC) and adaptive backwards APC (APC-AB)

  - Sub-band coding (SBC) and SBC with adaptive bit allocation (SBC-AB)

- Vocoders

  Vocoders do not attempt to recreate the wave form. Instead, vocoders attempt to create a signal which the ear will perceive to be the same. As with wave form coding, fundmental frequencies are first extracted. However, instead of coding the harmonics, a digital filter is excited and the result is compared

to the original signal. Various excitations and filter parameters are tested and several iterations may be needed to determine the optimum excitation and filter parameters. The fundamental frequency plus the excitation and filter parameters are then sent. A code book may also be used.

Examples of vocoders include:

- residual excitation linear prediction (RELP)
- multi-pulse linear predictive coding (MPLPC)
- partial correlation coefficients (PARCOR)

To be viable for use in public telecommunications, voice compression systems must:

- o produce good quality voice (an MOS of at least 3.0 and preferably higher)
- o operate without noticeable delay
- o be small in size (on a chip)
- o be relatively inexpensive

Some systems available today provide good quality voice reproduction, but require so much processing power that they are not commercially viable. An example is the AT&T 4.8 Kbps system that provides good quality, but requires a mainframe to do the processing.

Other systems meet all criteria except voice quality. For example, 2.4 Kbps systems presently being used for military purposes are compact, fast, and inexpensive. However, the quality is not considered to be adequate for use in public telecommunications systems.

The availability of systems meeting all four criteria can be summarized as follows:

- 16 Kbps systems are commercially available today
- 8 Kbps systems are under development and will likely be commercially available within one or two years
- lower bit rate systems are, perhaps, five years off

It is noteworthy that similar R&D effort is being expended toward video compression. At the present time, slow motion video requires 64 Kbps, and medium motion video requires 384 Kbps.

4.3 Cellular Radio

4.3.1 Present Situation

4.3.1.1 Canada

Cellular radio systems operating in the 800 MHz band were introduced in Canada just a few years ago. The systems are analogue, using angle modulation with 30 KHz channel spacing. Two cellular operating companies were licensed in 23 designated metropolitan areas. These cellular operators are:

- Cantel Inc., providing cellular radio service in all 23 metropolitan areas
- Cellnet, cellular radio affiliates of the Telecom Canada members, with each affiliate providing cellular radio service to the designated metropolitan areas in its respective serving area

The frequency bands allocated to each cellular operator are as follows:

Cellular Operator	Mobile Transmit (MHz)	Base Transmit (MHz)
Cantel Inc.	825.0 - 835.0	870.0 - 880.0
Cellnet	835.0 - 845.0	880.0 - 890.0

Each cellular operator has a total of 312 voice channels and 21 signalling channels which can be reused throughout the system. The specific channel arrangement within each cell is determined by the cellular operator.

Cellular operators have experienced unprecedented growth. Today, there are about 120,000 mobiles operating in Canada, and approximately 500 new customers are being added every day. The three busiest areas are Toronto, Montreal, and Vancouver, with Toronto being the busiest. Both Bell Cellular and Cantel have indicated that they have had to split cells in Toronto and Montreal. Cell splitting has yet been necessary in Vancouver, and is not likely to be until 1991 or 1992. In the Toronto downtown core, some cells have been split into three and antennas are being down-tilted to limit cell range to 4 to 5 Km.

Cantel has had to increase the processor speed in Toronto. Further cell splitting is possible; however, as cell size decreases, the following problems increase:

- o inter-cell interference becomes harder to control
- o cell implementation costs increase
- o finding suitable property on which to optimally locate base stations becomes more difficult
- o more frequent handoffs are required, resulting in:
  - service degradation to the customer
  - increased load on the system processor

The cellular operators agree that, although additional cell splitting could be undertaken, it would only be an expensive and a short term solution. In the long term, additional channels are needed to maintain the present grade of service (P.01).

4.3.1.2 USA

In USA, cellular systems were implemented on the same basis as in Canada. Cellular usage in the USA has grown more than in Canada, and three cities (New York, Chicago, and Los Angeles) are very congested. To alleviate congestion in these three cities, the FCC allocated additional spectrum (part of a previous mobile satellite allocation) for additional 30 KHz cellular radio channels, as follows:

Cellular Operator	Mobile Transmit (MHz)	Base Transmit (MHz)
Provider A	824.0 - 825.0 845.0 - 846.5	869.0 - 870.0 890.0 - 891.5
Provider B	846.5 - 849.0	891.5 - 894.0

Only customers with radios equipped for the additional channels can use the additional spectrum. It is expected that very few existing customers will purchase new radios. Therefore,

until the new customers make up about 30% of the customer base, the additional channels will be under-utilized. Effectively, the new customers will temporarily enjoy a higher grade of service.

The additional channels will only postpone the congestion problems for a few years. Eventually, the additional channels will be equally congested, and other solutions will have to be implemented. Various proposals have been presented, and these are discussed below. The proposed solutions involve new technologies. Some experts are of the opinion that the additional spectrum should have been used to implement new technologies in the USA; other experts argue that the new technologies are not sufficiently mature, and that the postponement of the congestion problem will allow time for their maturation.

4.3.1.3 Europe

Cellular radio systems have also been implemented in Europe. The systems are also analogue. Because mobile radio usage in Europe has not been as extensive as in North America, it was possible to accomodate these systems in the 150 MHz and 450 MHz bands.

European cellular radio systems are experiencing a growth rate similar to that of North America. The systems will soon be congested, and new a system is being constructed. Frequency spectrum in the 900 MHz band (2 X 25 MHz) has been reserved for the new European cellular system.

4.3.2 Proposals for the Future

Numerous proposals for future cellular systems have been presented. The proposals briefly described below are those that appear to be the most viable for application in the near future (early 1990s) in North America and Europe.

4.3.2.1 AT&T Proposal

AT&T has proposed that future cellular systems in North America use narrowband digital channels. The digital channels would be single channel per carrier (SCPC) and access would be on an FDMA basis.

A 5 KHz unit channel has been proposed. The modulation technique would provide about 2 bps/Hz; hence the gross bit rate on the unit channel would be about 10 Kbps. Two unit channels would be used for voice (with speech coding at about 16 Kbps) and one unit channel would be used for data (for data transmission rates up to about 8 Kbps). A third channel would be used for control purposes. In the future, after lower bit rate speech coding techniques have been further developed, it is planned that one 5 KHz channel would be used for voice.

Spectrum would be obtained by gradually converting each existing 30 KHz analogue channels into six 5 KHz digital channels, with the conversion taking place over a period of several years. During the conversion period, radios would have to accomodate both analogue and digital channels.

4.3.2.2 Motorola Proposal

Motorola has proposed a narrowband analogue solution for North America, using 15 KHz channel spacing. Analogue voice would be used. Data transmission would be via voice band modems.

Spectrum would be obtained by gradually converting each 30 KHz channel into two 15 KHz channels. In the conversion period, radios would have to be able to accomodate both 30 KHz and 15 KHz analogue channels.

4.3.2.3 Northern Telecom/Ericsson Proposal

Northern Telecom and Ericsson have proposed a digital solution for North America, wherein the digital channels would be spaced by 30 KHz on an FDMA basis, and within each individual 30 KHz channel, there would be three TDMA channels.

Spectrum would be obtained by gradually converting existing analogue channels into digital channels, with the conversion taking place over a period of several years. In the conversion period, radios would have to accomodate both analogue and digital channels.

4.3.2.4 European Proposal

Groupe Speciale Service Mobile (GSM) of CEPT is implementing a new cellular radio system for Europe that will have 16 TDMA channels in a 200 KHz bandwidth. Multiple carriers will stacked on an FDMA basis in the available 25 MHz.

Each slot will have a useable bit rate of about 8 Kbps. Two channels will be used simultaneously to provide 16 Kbps digital voice channels initially. In the future, after voice coding techniques are further improved, one 8 Kbps channel will be used for voice. RELP coding is planned initially.

The system will operate in the 2 X 25 MHz spectrum allocation in the 900 MHz band, which has been reserved for the new European cellular system. The new system will operate independently of the existing cellular systems. The system is to be operation in 1991.

4.3.3 Choice of a System

A decision has not been made as to which celluar radio proposal will be implemented in Canada or the USA. The Cellular Telecommunications Industry Association (CTIA), of which Cantel and Cellnet are members, is studying the various proposals. The DOC and FCC are also carrying out their own investigations. The industry goal is to finalize specifications for the new cellular system in 1989 and to have the system operational in 1991.

The main aspects which must be considered in selecting a system for the future, namely:

- spectrum efficiency
- voice compression technology
- ISDN compatibility
- international compatibility
- implementation cost
- implementation ease

4.3.3.1 Spectrum Efficiency

In Bartek's view, the most important aspect is spectrum efficiency. However, spectrum efficiency is difficult to assess in mobile radio because it can be measured in several ways. Therefore, when undertaking a comparison, one must be careful that "an apples with apples" comparison is made.

The comparison problem in mobile radio is complicated in several ways, namely:

- Analogue vs Digital Systems

  Analogue systems provide a speech channels (nominally 3.1 KHz) within a certain RF bandwidth. These channels can also carry data using audio band modems. However, because of protocol overheads (which are further increased by multipath fading), effective data rates do not exceed 4.8 Kbps, and in practice may be lower.

  Digital systems, on the other hand, provide a bit rate within a certain bandwidth. The bit rate varies with the bandwidth used and modulation technique. Spectral efficiency tends to be stated in terms of bit rate per bandwidth used (bps/Hz). Such quotations of bps/Hz tend to be at the channel code data level, not the user data level. It is the effective bit rate available to the user that must be used in the comparison.

- Voice Compression Technology

  The status of voice compression further complicates the evaluation, because this technolgy is evolving and the near term outcome is somewhat uncertain.

  Although the use of data services is increasing rapidly, voice traffic is still by far the predominant service (and will be for many years) in mobile radio. Therefore, one must examine the voice handling capacity of a digital mobile system when comparing it to an analogue system. This becomes somewhat difficult in that the voice handling ability in a digital system is a function of voice compression technology. It is 16 Kbps today; it maybe be 8 Kbps within a year or two; it might be 2 to 4 Kbps some years later.

This makes life very difficult for the cellular radio planner because he must gamble. If he is confident that low bit rate voice will come soon, he should wait before imnplementing a new technology; if he feels that low bit rate voice compression is some years off, then he must implement other solutions before congestion becomes too great and implementation of any new system becomes extremely difficult.

- Frequency Reuse

  Another major consideration in evaluating the various proposed systems is the extent to which frequencies can be reused.

  Some modulation schemes and access methods can tolerate a lower carrier-to-interference ratio, and hence frequencies can be reused more often than in other systems.

It will be necessary to rigorously prove the relative spectral efficiency of the different digital and analogue systems under consideration, before a decision can be made. Considerable theoretical analysis has already been conducted. Field demonstrations are now needed. It is expected that proponents of the various proposals will be implementing field trials to demonstrate their proposed methods.

Such field trials must not interfere with existing systems, but yet must be in the same frequency band to be conclusive. It is suggested that spectrum in the 845 to 849 MHz and 890 to 894 MHz be temporarily allocated in Canada for these demonstrations, so that field trials can also be held in Canada.

Despite the fact that data usage is increasing in the fixed network and similar increases in data usage can be expected in the mobile network, it is expected that voice usage will continue to be the predominant service in mobile radio for many years to come. Therefore, it would seem that the most appropriate way to compare the spectral efficiency of different cellular radio systems is in terms of voice traffic handling capacity per area served, e.g. Erlangs/Km^2.

The DOC is actively involved in the various study groups which are examining the proposed systems. The DOC should continue its efforts in this regard

to ensure that the industry places sufficient priority spectral efficiency in making a decision.

4.3.3.2 Voice Compression Technology

The cellular radio industry appears to be in a dilemma. It would be advantageous to implement the new system before congestion becomes too severe. The digital proposals, which appear to be the leading contenders and offer the greatest spectral efficiency, require voice coding systems. The implications of using voice coding are as follows:

- o A specific coding technique must be selected and standardized. Because there are various competing systems, the selection and standardization process must be conducted in the public fora, and will take some time.

- o Since voice coding technology is rapidly evolving, new and more efficient techniques will appear soon after the initial coding technique is implemented. The more efficient techniques should be implemented for reasons of spectral efficiency. However, existing radios, using the old coding technique will still be in service. This means that, in order for a new radio to communicate with an old radio, the new radio will have to support both coding techniques. Alternately, all existing radios would have to be upgraded in order to introduce an improved coding technique, but this may be difficult in practice.

- o A cellular user will be able to place calls to:

  - cellular users in the same cellular serving area

  - cellular users in a different cellular serving area

  - PSTN or ISDN subscribers

  The cellular switch will have to know whether it is to decode the voice bits or transmit them on. Further, if it is to decode the bits, it must know which voice coding technique to use. The procedures by which the cellular switch will make these

decisions have yet to be defined, as well as the low bit rate channel capacities.

As can be seen, many voice coding questions must be resolved before the decision to implement a digital system can be made. Further investigations must be undertaken in order to obtain sound data upon which a decision can be based.

4.3.3.3 ISDN Compatibilty

ISDN, which is the principal topic of this report, will be introduced into the fixed network in the next few years. The question to be answered is "Should ISDN be implemented in cellular radio systems, and if so, to what extent?"

In Bartek's view, after users become accustomed to ISDN services in the fixed network, they will demand similar services in the cellular network. Basic rate ISDN access (at lower bit rates) should be provided in the future cellular radio systems. Primary rate and broadband ISDN access, on the other hand, require too much bandwidth (even with compression techniques), and are not practical in a cellular radio environment.

ISDN functionality is far more important than ISDN compatibility. ISDN compatibility would require adherence to the ISDN channel rates, e.g. 64 Kbps for B channels. ISDN functionality, on the other hand, would permit the user to select the specific service using standard ISDN protocols, but the service would be provided at lower bit rates. In this regard, the celluar access digital network (CADN) concept presented by AT&T has merit. A unit channel is proposed, with a fixed data capacity, e.g. 2 Kbps. Multiple unit channels would be accessed by the user as needed to make up:

- information (I) channels
- control (C) channels

The total bit rate of the I and C channels would vary with the specific application. The user would have ISDN functionality in that he would be able to access 2I+C channels, or I+C channels, or only a C channel. The C channel would be operate with two logical links, namely:

- a common access and control (CAC) link for the RF channel protocol, which would handle all of the signalling and RF management functions required with digital cellular radio system

- a user specific control (USC) link, which would provide the user with ISDN D channel protocol functionality, except at lower bit rates

The cellular switch would interface with the ISDN and communicate with the ISDN at the standard ISDN rates.

Another possibility for packet services over cellular radio is to dedicate a cellular channel to packet services, and to have all packet users contend for the common channel. The channel would be released after each packet transmission. This would provide high spectral efficiency in the packet channel.

4.3.3.4 International Compatibility

The existing analogue cellular systems in Canada and USA are compatible. Cellular operators have affiliation agreements, which permits a user to use his radio while away from his home location in either country.

It would be most desirable for the new cellular systems to also be compatible between Canada and USA, because of the large amount of travel between the two countries. In fact, as noted in Section 3.0, there may be an implied obligation to use the same technology.

Compatibility with Europe would be advantageous, but is less important because there is less travel between Europe and North America. Also, since the Europeans have already begun to built their new system, North America would have to select the GSM system in order to be compatible.

4.3.3.5 Implementation Cost

The cost of implementing a new system also must be considered, i.e. the cost to the user and to the cellular operator.

The equipment cost of the mobile will vary with the solution selected, but not significantly. It is understood the the manufactured cost of the mobile is a relatively small percentage of the retail purchase price. Further, mass production is reducing the cost of the mobiles. Therefore, even if a complex mobile were required by the solution selected, the retail purchase price of the mobile might not increase appreciably.

More important is the cost of constructing the base stations and system processor. This cost is passed on to the user in terms of usage charges.

CTIA is evaluating the various proposals on a business case basis.

4.3.3.6 Implementation Ease

The ease with which the new solution can be implemented is an important consideration. The availability of vacant spectrum would make implementation considerably easier.

Canada is in a fortunate position in that the additional 2 X 5 MHz, which was allocated in the USA, is still held in reserve in Canada. In the course of the study, Bartek interviewed BC Cellular, Bell Cellular, and Cantel in Toronto and Vancouver. All operators are of the opinion that the additional spectrum should be allocated for the purpose of introducing the new systems. This is seen as necessary in order to maintain the present grade of service during the transition period. The cellular operators note that only customers with new radios, supporting the existing 30 KHz analogue channels and channels of the new system, will be able to use the new system channels. If existing 30 KHz channels are converted to new system channels (as opposed to new system channels in the additional spectrum), the grade of service to existing customers will drop.

4.4 Trunked Mobile Radio

4.4.1 Present Situation

Trunked mobile radio systems have been established in all major centres in Canada, for private and public service. Although these systems may have more than one base station, hand-off between base stations is not provided as in cellular systems. SCPC analogue channels spaced at 25 KHz are used, and channels are selected by users on a demand basis from the pool of idle channels. Such systems operate in both the 450 MHz and 800 MHz bands.

Trunked systems have been designed primarily for voice service, but can carry slow speed data with voice band modems. Trunked systems provide communication between mobiles in the coverage area, and usually also permit mobiles to be interconnected with the PSTN.

Some of these systems are congested, particularly in the 450 MHz band. It is noted that the capacity of trunked systems could also be increased by employing the techniques which being considered for cellular radio.

4.4.2 Trunked Mobile Systems & ISDN

As presently designed, it would be difficult to interface analogue trunked systems with an ISDN. It is suggested that the analogue trunked systems remain interconnected with the PSTN.

If new digital trunked systems are constructed in the future, it is recommended that,as has been suggested for cellular radio, ISDN functionality (not ISDN compatibility) be kept in mind in the planning of the digital trunked systems.

4.5 Mobile Satellite

4.5.1 Present Situation

4.5.1.1 Maritime Applications

Maritime applications were the first to attempt satellite communication with non-stationary radios. Mobile satellite service is being provided to the maritime industry by the International Maritime Satellite Organization (INMARSAT). Initial service to ships was provided using 1.2 m antennas with stabilizers and tracking devices. Current applications use slightly smaller antennas. Essentially, these systems use fixed station technology, with adaptations for the ship environment. Initial systems were analogue with SCPC channels. Some digital systems have been implemented for data purposes.

Earth stations using new technologies, similar to that planned for land mobile satellite (discussed below), are under study for maritime applications.

4.5.1.2 Land Applications

Mobile satellite communication with land vehicles has been in planning in Canada since the 1970s. Currently, Canada plans to launch a satellite called MSAT in geostationary orbit at 106.5 ^{o}W in late 1992. The satellite will operate in the L band (1.6 GHz up and 1.5 GHz down). The 2 X 5 MHz reserved for MSAT in the 800 MHz band may also be used. Multiple beam antennas are planned for the satellite to provide nine spot beams, therefore permitting frequency reuse.

MSAT terminals will use one of two antennas, either a low gain omni-directional antenna or a high gain electronically steerable antenna.

MSAT channels will be spaced at 5 KHz, and terminals will be equipped to operate with either of two modulation schemes, namely:

- amplitude companded single sideband (ACSSB) modulation with transparent tone in band (TTIB) and feedforward signal regeneration (FFSG) for voice applications

- differential minimum shift keying (DMSK) modulation for data applications

It will also be possible to use the digital mode for voice transmission; MPLPC coding at 4.8 Kbps is planned. The voice coding scheme will be software programmable so that improvements can be easily implemented in the future.

Prior to the launch of MSAT, a field trial is planned to test MSAT terminals which are under development. The field trial will use spare capacity on INMARSAT's MARECS B2 which hovers over the Atlantic Ocean. The field trial will be conducted with a trucking firm in Ontario.

4.5.1.3 Aeronautical Applications

Mobile satellite service is also being considered for aeronautical service. Analogue and digital systems are under consideration. However, at this point in time, it appears that no firm plans to implement a system have been made.

4.5.1.4 Integration of Services

At WARC '87, it was decided that mobile satellite services (land, maritime, and aeronautical) would operate in the L band, and various blocks of frequencies were assigned on a primary and secondary basis to each service.

Several countries, including Canada, have been promoting the integration of land, maritime, and aeronautical mobile satellite services, wherein all three services would share the available L band spectrum equally to achieve greater traffic efficiency. Unfortunately, these countries did not succeed in convincing the other countries, and the three services are to remain separate for the moment. The door has been left open, however, in that the countries in favour of integration will have an opportunity to demonstrate the advantages of integration at the next WARC.

It is noteworthy that the MSAT terminals are being designed so that they can use all of the mobile satellite frequencies.

4.5.2 Mobile Satellite & ISDN

Mobile satellite systems are foreseen to provide both voice and data services. However, it appears that little attention has been given to providing

ISDN functionality in mobile satellite systems. Rather, the industry has been focusing on the more important issues of spectral efficiency (channel spacing and frequency reuse), the orbit to be used, and the RF requirements of the mobile terminal.

MSAT, although having a digital mode of operation, is being designed to interface with the PSTN, not an ISDN. Nevertheless, MSAT will still provide a valuable service.

Future systems, if digital, could be designed to provide ISDN functionality, where the user is able to select several incremental channels to provide the composite bit rate needed for the particular service.

4.6 Personal Radio

4.6.1 The Vision

The various portable radio technologies, such as cellular telephones, cordless telephones, and pagers, are foreseen to come together in the future in the form of personal radio. The personal radio would have to be physically small, and low in power consumption (operating from batteries). Users, rather than physical locations, would be assigned telephone numbers. The network would have to keep track of the user's location in order to complete calls. Such a device would function as a cordless extension in the office, a cellular telephone in the car, and a cordless telephone at home.

To-date, radio systems have been application specific, i.e. designed for a specific service with special frequencies allocated to that service. It is recognized that such an approach makes inefficient use of spectrum, and that greater traffic efficiencies could be achieved by integrating the various services.

The problem with integrating the various services is that the one radio would have to function in a variety of environments, each environment being best served by possibly a different modulation or access technique. The office environment, with its severe multipath conditions, is seen to pose the greatest challenge in this regard. Extensive R&D effort is being focused on the effectiveness of different modulation techniques in different environments. The results to-date are by no means conclusive, and it is likely that R&D effort in this area will continue for some years.

Nevertheless, it is most probable that early forms of personal radio will be introduced by the year 2000. It is understood that the allocation of spectrum for personal radio will be a major subject at the next WARC. Proponents of personal radio believe that a minimum 100 MHz of bandwidth will be needed for personal radio, and suggest that spectrum in the 1.4 GHz to 1.5 Ghz bands be vacated.

4.6.2 Personal Radio & ISDN

The proponents of personal radio foresee ISDN as necessary to support personal radio, and indeed

the signalling capabilities such as are planned within ISDN would be needed to keep track of the personal radio user's location.

However, as stated before, the general provision of ISDN bit rates over radio would be extremely wasteful of spectrum. What is needed is ISDN functionality, where a user can call up the bit rate needed for the service at the moment.

Even in year 2000, voice communication will still be the predominant service in mobile radio. Voice coding, by that time, will likely have advanced to the point where good quality voice service will be available with bit rates of 4 Kbps, or perhaps even less. This reinforces the CADN concept of providing service via multiples of unit channels, e.g. 2 Kbps unit channels. Voice would then be provided at the most efficient rate possible with the technology of the day. Data services would request multiple unit channels, as required by the particular service required.

4.7 Fixed Terrestrial Radio

4.7.1 Present Situation

Analogue and digital terrestrial radio systems, both point-to-point and point-to-multipoint, are used today to provide access to the PSTN.

4.7.1.1 Point-to-Multipoint Systems

Point-to-multipoint radio systems, often called subscriber radio or rural telephony systems, connect and concentrate widely dispered telephone subscribers to the public telephone system. Such systems also have application in private networks. Such systems are used either because they are more cost-effective than traditional cable systems, or the radio system can be implemented more quickly.

Present policy within DOC is to license subscriber radio systems in rural areas only, where there is a clear economic advantage in using radio systems instead of cable. However, since such systems have application in private networks, it is understood that the DOC is considering a change in policy which would permit the use of subscriber radio in urban areas.

4.7.1.2 Point-to-Point Systems

Low and medium capacity point-to-point radio systems, both analogue and digital, are also used in special cases for access to the PSTN. A typical example is a single industrial complex in a rural area interconnecting with a telephone exchange in a city.

Present licensing policy for these systems requires that the applicant clearly demonstrate a need for the system and that other alternatives, such as cable carrier or fibre optics, are not feasible.

4.7.2 Terrestrial Radio & ISDN

Analogue terrestrial radio systems are not well suited to ISDN, and will have to remain connected to the PSTN. Since the PSTN will survive for many years to come, analogue systems will continue to provide a valuable service.

On the other hand, digital terrestrial radio systems (point-to-multipoint and point-to-point), are very adaptable to an ISDN access environment. To be suitable for ISDN, the following changes are required, namely:

- clear channel capability (64 Kbps) must be provided
- 16 Kbps D channels are needed for basic rate applications
- S/T or U interfaces must be added

With the cost of fibre optics continuing to drop, it is expected that limited use of terrestrial point-to-point radio systems will be made for ISDN access.

4.8 Satellite Communications

4.8.1 Present Situation

In Canada, all communications satellites are owned and operated by Telesat, and, in turn, Telesat leases transponder space to users. Previously, only Telesat and recognized common carriers could own the earth stations. As a result of a recent CRTC decision, private users may now own the earth stations.

Satellite systems support voice, data, and video applications, in both public and private networks and in both point-to-point and point-to-multipoint system configurations. In the main, video services are carried by C band transponders and voice and data services are carried by Ku band transponders. Examples of applications include:

- voice and data transport between telephone companies in major cities
- video and audio transport for broadcasters
- voice and data access from isolated areas to the telephone company
- leased lines in private networks

Transport systems generally carry a large number of voice and data channels on point-to-point basis or a small number of video channels on either a point-to-point or a point-to-multipoint basis. As such, satellite transport systems supplement the terrestrial networks.

Access systems carry a small number of voice and data channels between users in remote areas and the telephone company; such systems provide access which might not otherwise be possible.

Private systems carry a small number of voice and data channels between corporate locations; usually such systems are put in place because they are more economic than terrestrial systems.

The satellite transponder is essentially an RF repeater, and the modulation scheme and access method is determined by the type of earth station used. Earth stations may employ either analogue and digital modulation techniques. In analogue systems, channels are stacked on an SCPC basis. In digital systems, channels are either stacked on an

SCPC basis or slotted on a TDM basis. Channel assignment may either be permanent and on demand.

Some systems require all communications to be routed between the remote and the master station; if one remote is to communicate with another remote, the call must be routed through the master station, resulting in double transmission delay. The double delay is not acceptable for voice, and such relaying is generally only used in data applications.

Other systems permit remotes to communicate with other remotes directly. Signalling is accomplished through a common signalling channel. Such systems make more efficient use of spectrum, but the earth stations are more costly.

The relatively long transmission time on satellite channels (approximately 0.5 seconds) can cause some synchronous data communications protocols to not operate properly. Some protocols are arranged to send a small number of frames before requiring an acknowledgement of previous frames. Because of the long transmission time, such protocols must stop transmitting data until the acknowledgement is received, and this reduces throughput. Some protocols time out. One solution is to modify the protocol so that it operates with a larger number of unacknowledged frames.

A relatively new concept is the very small aperature terminal (VSAT). In addition to using a small antenna, the VSAT usually provides a low bit rate between the remote and a master station. A large number of remotes communicate with the master station on a demand basis. Such systems are foreseen to be used in corporate networks having a large number of offices across the country, e.g. credit card verification systems for major retailers. It is understood that K-Mart is implementing a VSAT system in USA.

The recent CRTC decision on reselling and sharing is having an impact on satellite communications in Canada. It permits an entrepreneur to lease satellite transponder space from Telesat, and to resell it to customers on a usage basis, usually with value-added services. This, combined with advances in video compression technology, will make video conferencing affordable.

Also of interest is the advanced communications technology satellite (ACTS) to be launched by the

USA in 1989. ACTS will operate uplinks at 27.5 to 30.0 GHz and downlinks at 17.7 to 20.2 GHz. Multibeam antennas will be used to provide fixed and steerable spot beams. ACTS will also have on-board switching facilities, and will function as a central office in the sky.

4.8.2 Satellite Communications & ISDN

Despite many exciting developments in satellite communications, it appears that very little attention has been given to-date regarding satellite communications and ISDN. This will change; as ISDN is implemented in the terrestrial networks, customers will begin to demand ISDN services in satellite access systems.

Analogue satellite systems are not suitable for interfacing with an ISDN, and will continue to provide access to the PSTN.

Digital satellite systems, on the other hand, can be adapted to an ISDN environment with minor design changes. As with terrestrial radio access systems, the modifications required are as follows:

- clear channel capability (64 Kbps) must be provided
- 16 Kbps D channels are needed for basic rate applications
- S/T or U interfaces must be added

Because transponder space is expensive, the availability of good quality, low bit rate voice coding will likely result in low bit rate voice services to be offered. Likewise, low bit rate video serices will also emerge. VSAT operators will be well positioned to provide such services. Such services would make very efficient use of frequency spectrum.

4.9 Radio Conclusions

The main conclusions drawn from the foregoing analysis are as follows:

4.9.1 Frequency Spectrum Conclusions

4.9.1.1 Demand For Frequency Spectrum

As we move closer to the information age, users will demand more information, and in turn, more bandwidth. However, ISDN itself will not cause an increase in demand, as the demand would be there even if ISDN had not been conceived. ISDN, through better integration, will allow us to deal with the demands for more bandwidth in a more efficient manner.

Although the demand for bandwidth will increase in the future, the extent to which additional radio frequency spectrum will be required will be governed by by:

- the rates for narrowband and broadband ISDN services
- the extent to which fibre optic systems will be used in ISDN

In view of these uncertainties, it is not possible to make quantitative predictions regarding radio spectrum requirements by year 2000. Further, it is therefore premature to make firm plans regarding reallocation of spectrum at this time.

4.9.1.2 Mobile Radio

Since all mobile radio applications best operate at frequencies lower than 3 GHz, and since the requirement for all types of mobile radio service will continue to increase, we must seek methods to optimize the available mobile radio frequency spectrum. Methods available are:

- shifting fixed radio systems (transport and access) to frequencies above 3 GHz
- integrating the various mobile services to achieve better traffic efficiencies
- use of digital systems that provide a greater bps/Hz ratio

- o use of systems that permit greater frequency reuse

- o use of low bit rate voice coding

Of the methods available, the use of voice coding appears to offer the greatest potential, but all methods must be pursued. Imagine the spectral efficiency in a future integrated mobile radio system using 2 Kbps voice coding combined with a modulation scheme allowing 2 bps/Hz (or greater) and a three cell cluster.

4.9.1.3 Fixed Radio

Fixed radio frequency allocations below 3 GHz will have to be eventually shifted to new frequency allocations above 3 GHz to make more spectrum available for mobile radio. This shift is foreseen to be a long term measure (after year 2000), and would take place in preparation for integrated mobile services and personal radio.

The trend to use digital systems, instead of analogue systems, will continue. This would have occured even if ISDN had not been conceived. However, ISDN will increase the demand for digital systems, in both transport and access systems. Frequency allocations for analogue fixed service should be gradually converted to digital fixed service.

Fibre optic systems are becoming an increasingly viable alternative to fixed radio systems. Fibre optic systems, particularly in broadband ISDN applications, will mitigate the increasing demand for fixed radio frequencies. The increased use of fibre optics for ISDN transport and access systems should be encouraged by the DOC.

4.9.2 ISDN Conclusions

4.9.2.1 Mobile Radio

We simply do not have the mobile radio spectrum available to seriously consider the use of the presently defined ISDN channel rates in mobile radio. Lower bit rate ISDN channels must defined by CCITT to provide voice and data service in mobile radio. The low bit rate channels are not only required for mobile radio access to an ISDN. If, for example, two mobiles using low bit rate

voice coding are interconnected via an ISDN, the low bit rate channel must be extended through the ISDN, permitting coding and decoding to occur only within the mobiles. Similarly, lower bit rates must be defined for data services over mobile radio. The ISDN operating company could accomodate the low bit rate needs with 64 Kbps channels and bit stuffing. However, arguments over the cost of the channel would likely arise; a better solution is to define low bit rate ISDN channels for mobile radio applications. It is understood that Australia has already identified this problem at CCITT; it is suggested that Canada also make representations to CCITT on this matter.

Although we cannot have full ISDN bit rates in mobile radio, ISDN functionality should still be maintained to provide ISDN features using standard ISDN protocols. The concept of a mobile radio unit channel, e.g. a 2 Kbps channel, has merit and should be pursued. Higher capacity channels would be temporarily configured from multiple unit channels as needed to provide the channel capacity required by the service requested.

Just as standards have been developed for A-law PCM, Mu-law PCM, and ADPCM, we shall have to develop standards for 16 Kbps, 8 Kbps, and lower bit rate voice coding systems. This is necessary in order to minimize the number of techniques in service, particularly in mobile radio systems. As new and better voice coding techniques emerge, they should be implemented. However, radios using the older techniques will still be in service, and the new radios will have to support more than one method of voice coding.

4.9.2.2 Fixed Radio

The frequency spectrum available above 3 GHz is less limited, and the use of full ISDN channel rates (in both transport and access systems) could possibly be achieved. Nevertheless, we should conserve spectrum wherever practical to do so.

With the availability of good quality, low bit rate voice coding sytems, perhaps we should also consider the use of voice coding in fixed systems. Note that some operating companies presently offer a 32 Kbps voice service using ADPCM. The service is offered at a lower rate because less system capacity is used. Perhaps, as voice coding techniques are further prefected and the bit rate

for good quality voice decreases, we should use lower bit rates on information channels in both access and transport systems. An ISDN is well equipped to provide such low rate channels on request. All that is needed is CCITT definition of lower rate channels.

In like manner, video coding techniques could also be used to provide low bit rate video services over fixed radio, leaving the full broadband applications to fibre optic systems.

4.9.3 Availability of Radio Equipment for ISDN

Although only a few suppliers of radio equipment have thought seriously about ISDN access via radio at this point in time (cellular radio being an exception), this will change raddidly as ISDN begins to pervade the public telecommunications systems.

Analogue radio systems will not find application in ISDN, but will continue to serve the PSTN, which will be with us for many years to come.

Digital radio systems, on the other hand, are well suited to ISDN because they are digital. In most cases, present equipment designs can be adapted to the ISDN environment with only minor modification in the multiplexing and signalling arrangements. It is expected that radio equipment suppliers will react fairly quickly, once demand exists.

4.9.4 Future Cellular Radio System

The North American cellular radio industry is evaluating the various proposals presented for the next generation of cellular radio. Many of the individuals involved are from cellular operating companies and manufacturers. As businessmen, it is natural that they should conduct the evaluation on a business case basis. This could result in frequency spectrum efficiency not being given the priority it deserves. It is therefore essential that the DOC continue its active participation in the evaluation and decision process.

The allocation of the additional 2 X 5 MHz in the 800 MHz band, which is presently on reserve for MSAT, would make the implementation of the new cellular radio system in Canada significantly easier, and would ensure that the grade of service

to existing cellular users is not degraded during implementation of the new system. If necessary as a fallback position, it would be possible for the DOC to temporarily allocate the 2 X 5 MHz only for the implementation phase, and to withdraw the 2 X 5 MHz after the new cellular radio system has been fully implemented.

4.9.5 Adequacy of DOC's Spectrum Management System

In the course of the study, the DOC's procedures and tools for spectrum management were examined to determine whether any changes would be necessary as a result of ISDN.

ISDN will not introduce any changes in the RF sense. There will be a need to modify or develop new Radio Standards Specifications and Standard Radio System Plans to accomodate new technologies, particularly digital cellular radio. Also, there will be a need to accomodate more digital and less analogue systems. However, it would appear that no changes to the DOC's existing Spectrum Management System need to be made.

5.0 ISDN IMPACT ON INTERCONNECTION REQUIREMENTS

5.1 ISDN Activity in Canada

5.1.1 Operating Companies

5.1.1.1 Field Trials

Operating companies in Canada, USA, and other parts of the world are implementing ISDN field trials. Although the ISDN standards are still evolving and might change slightly in the final outcome, the field trials are useful in that they are providing:

- operating experience with ISDN technology in a working environment
- the basis on which the full scale introduction of ISDN can be planned
- an evaluation of user reaction
- a basis for market projections

A summary of Canadian field trials follows:

- Bell Canada

  Bell Canada implemented its ISDN field trial in Ottawa in November 1987 using a DMS-100 exchange. The field trial has 100 basic rate lines in service. Subscribers include internal Bell Canada employees and three Federal Government Departments, DND, DOC, and DRIE. Primary rate service will be added in late 1988.

  Bell Canada will also be conducting field trials in Montreal and Toronto using DMS-100 exchanges.

- BC Tel

  BC Tel is not planning a full field trial initially; instead, it plans to demonstrate ISDN functionality using a GTD-5 ISDN module, commencing in May 1988. An ISDN field trial is planned for late in 1988. A decision on the exchange to be used in the field trial has not yet been made.

- AGT/Edmonton Telephones

  AGT and Edmonton Telephones are planning a joint field trial using DMS-100 exchanges. The field trial is to start in the first quarter of 1989.

- Other Telephones Companies

  Other telephone companies are considering conducting field trials, but none have yet formally decided to do so.

5.1.1.2 SS7 Networks

The Telecom Canada members are implementing SS7 networks, and they are scheduled to be in service in 1989. The SS7 network will serve the existing PSTNs as well as the future ISDNs.

Teleglobe also plans to implement an SS7 network to serve its existing trunk network. International signalling trials will be conducted in 1989 and 1990. Commercial service using DMS-300 exchanges is scheduled for 1991 in Montreal, 1992 in Toronto, and 1993 in Vancouver.

CNCP is presently planning its SS7 network.

5.1.1.3 ISDN Availability

The major operating companies in Canada are actively preparing for ISDN. It is reasonable to predict that, by the year 2000, exchanges and transmission systems will have been upgraded for ISDN to the extent that customers in all major centres will be able to have ISDN services.

5.1.2 Suppliers

Suppliers are likewise preparing for ISDN in several areas, namely:

- central office equipment
- PABX equipment
- LAN equipment
- terminal equipment

Many equipment suppliers are adapting their existing products for ISDN in advance of standards being formalized. Where two proposed standards are competing for official acceptance, some suppliers have developed equipment to accomodate both proposals. The suppliers recognize that they may have to adjust their designs after the standards are formalized. The ISDN designs are usually offered as options, with traditional solutions being offered as well, e.g. in PABX and central office equipment, exchanges can accomodate analogue, digital (pre-ISDN), and ISDN lines.

A common approach taken with ISDN terminals is to adapt a personal computer and digital telephone, by adding the S/T interface and ISDN software.

A few suppliers are a little skeptical, and have taken a more conservative approach, i.e. they have done the design work for the ISDN interfaces, but have not yet made the decision to build the equipment.

5.1.3 Users

Users of telecommunications services in Canada are generally not well informed about ISDN at this point in time. Those that are informed appear to be skeptical of ISDN. Some are concerned that, in practice, it will not be possible to achieve the high level of standardization foreseen in ISDN, and that therefore many of the potential benefits will not be realized. Others see ISDN as an attempt by the telephone companies to promote centrex service. Still others view the proposed ownership of NT1 by the telephone company as eroding the terminal attachment policy established a few years ago. All are asking what the cost to the user will be for ISDN access and services.

In the course of the study, Bartek contacted the Canadian Business Telecommunications Alliance (CBTA), which represents business users in Canada, to obtain its views and concerns with the imminent introduction of ISDN in Canada. CBTA's comments are summarized as follows:

- S/T vs U Interface

  Although CBTA has not formally adopted a preference for either interface, the U interface would seem more appropriate. Adoption of this interface would allow the

users to access more information about their networks. If NT1 is included in the terminal equipment, the additional cost of NT1 will be minimal. The customer must have the option of owning NT1 and purchasing it on a competitive basis.

- International Standards

  ISDN should enable users to attach virtually any terminal equipment to the system in any country. Therefore, Canadian, USA, and international standards should be harmonized as quickly as possible.

- Effect on the User

  ISDN will give the user common management of voice and data networks. While all the applications and benefits of ISDN are not known at this time, the preliminary information from users involved in ISDN trials indicates that these users are pleased with ISDN.

- Regulatory Issues

  The pricing of ISDN will be an important issue. If prices are too high, ISDN will not be attractive to users. However, if ISDN prices are set too low so that ISDN services are cross-subsidized by other offerings, this could have unfortunate anti-competitive effects. Any lessening of competition, in the long run, will have a harmful effect to business users.

  In addition to these economic issues, technical issues must be addressed in order to allay concerns that ISDN will afford carriers an opportunity to re-monopolize the network. Regulators and government policy makers must ensure that users have access to all suppliers of ISDN facilities through a single access at the user's premises. In other words, there must be interconnection between ISDN carriers which is transparent to the user.

The regulators should ensure that effective and open *Type II competition, including enhanced service provision and resale and sharing, is allowed in an ISDN environment.

* The DOC has proposed that telecommunications carriers be defined in two types, namely:

- o Type I: telecommunications carriers that may own, operate, or control network transmission facilities used to provide telecommunications services to the public for a charge or toll

- o Type II: telecommunications carriers that provide services to the public by utilizing the network facilities or services of a Type I carrier

The DOC has further proposed that Type I carriers be subclassified as follows:

- o Type IA: carriers authorized to own, operate, or control transmission facilities that cross provincial or international boundaries, and authorized to provide domestic public switched telephone service

- o Type IB: other carriers authorized to own, operate, or control transmission facilities that cross provincial or international boundaries

- o Type IC: local carriers that do not own, operate, or control transmission facilities that cross provincial or international boundaries

- o Type ID: carriers providing public mobile telephone services on land, maritime, or aeronautical mobile or mobile-satellite systems

5.2 ISDN Implementation Issues

Numerous issues must be resolved before ISDN can be implemented in Canada. These issues fall into three categories, namely:

- o subscriber - carrier issues
- o carrier - carrier issues
- o internal carrier issues

This report addresses the first two categories.

5.2.1 Powering of Customer Premises Equipment

The telephone companies in USA have proposed that the customer provide power to ISDN terminals, including ISDN voice terminals. Telecom Canada has not yet taken an official position on this issue; however, it is believed that Telecom Canada will endorse the USA proposal.

Since the telephone company presently provides power to the single line telephone, the issue which will likely arise in Canada is whether the telephone company should provide power from the central office to NT1 and to ISDN voice terminals in basic rate service, particularly in the event of local power failure.

5.2.1.1 CCITT Suggestions

The I-Series Recommendations do not specify any powering arrangements for primary rate service, and, by implication, the customer is to provide the required power to all customer premises equipment (CPE) in primary rate access.

However, for basic rate access, the I-Series Recommendations suggest numerous options for powering of the CPE, leaving the decision to the National Administration. The Recommendations refer to NT, rather than NT1 or NT2, implying that the suggestions could apply to either. The distinction between NT1 and NT2 is made in this report, as it is felt that there are subtle, yet significant, differences. The distinction is made for the situation where NT2 (a PABX) is connected to the central office via multiple basic rate access lines, rather than primary rate access.

Making the distinction between NT1 and NT2, the various powering options suggested by CCITT are as follows:

- <u>NT1</u>

  NT1 may be powered from the central office or from a local power source.

  A local NT1 standby battery may be used in either of the cases.

- <u>TE1</u>

  TE1 may be powered by NT2, or if there is no NT2, from NT1; TE1 may also be powered from a local power source.

  A local TE1 standby battery may be used.

  The maximum power that TE1 is to take from NT1 is 1 w under normal power conditions and 380 mw under emergency power conditions. When NT1 enters a state where it is only able to provide emergency power to TE1, it is to indicate so by reversing the power polarity and TE1 is to only draw power for emergency functions. If multiple TE1s are used, only the first TE1 shall take emergency power from NT1.

  If multiple TE1s are used and the first TE1 is self-powered, the first TE1 may provide power to the other TE1s. The minimum power to be available from the first TE1 is 7 w.

Several other scenarios, although not discussed in the I-Series Recommendations, are implied by the wiring or equipment configuration. These are as follows:

- In all cases, it is implied that NT2 will be powered locally. A local standby battery may be used.

- The commonality of the wiring arrangement for the S and T interfaces implies that NT1 could draw power from NT2 or from TE1 (if NT2 is not used).

- The commonality of the S and T interfaces further implies that, in the case of a PABX using multiple basic rate access lines and the event of power failure, a selected TE1

might take emergency power from one NT1, as is presently the case with PABXs employing the "power fail cut through" feature.

5.2.1.2 T1D1.3 Proposal

The T1D1.3 specification for the U interface proposes that the customer should provide power to NT1, and specifies either a six or an eight pin connector between the transmission line and NT1 with two pins reserved for local power feed.

5.2.1.3 Analysis

The question of whether the telephone company should provide power to NT1 and TE1 is a complex one. Traditionally, the single line telephone has taken power from the central office. Since the telephone company presently provides power to the telephone in the PSTN, and since voice is (and will remain) the predominant service, one can easily argue that the telephone company should continue to provide power to, at least, a simple ISDN voice terminal in basic rate service during a local power failure.

Further, it appears that some current will have to be transmitted from the central office to NT1 to ensure that the connections do not otherwise corrode; this is referred to as sealing current. More research must be under taken to determine the minimum level of sealing current required.

On the other hand, there are arguments for local powering, namely:

- The emergency power level required by TE1 is 380 mw. NT1 will draw additional power; the amount has not yet been decided. The total minimum load on the central office for a basic rate access line may be several times greater than is presently the case.

- In the present telecommunications system, the telecommunications operating company does not always provide power to the customer. The following summarizes the current situation:

    - In single line voice service, power is transmitted over the subscriber loop.

However, if a feature telephone is used by the customer, the customer may have to provide an additional local power.

- With a KTS or PABX, the equipment is locally powered. However, the central office actually provides sufficient power over the trunk circuit for a single line set. Most PABXs provide a "power fail cut through" feature, where in the event of local power failure, one extension is connected to each central office trunk.

- In data service (packet or circuit switched), the customer must provide power to, not only the terminal equipment, but also the data line terminating equipment.

- In telex service, the customer must provide power to the terminal equipment.

One could argue that the ISDN terminal is similar to a data terminal, and therefore it should be powered by the customer.

o Battery technology has advanced appreciably in the last few years. It is quite feasible to provide a rechargeable battery in the ISDN voice terminal, providing several hours of standby service. NT1 could likewise be equipped with a rechargeable battery.

5.2.1.4 Conclusion

As can be see from the foregoing discussion, the issue is more involved than first appears on the surface. Reasonable arguements can be presented on both sides. Bartek believes that ISDN local powering arrangements will become an issue in Canada, one that may eventually be brought before the CRTC and PUBs for resolution.

It is suggested that, after the U interface specification has been finalized in USA and the level of power required by NT1 is known, the DOC undertake detailed technical and economic study of the powering question, under normal and emergency conditions, to provide information on which a decision can be based.

5.2.2 Analogue Telephones

The I-Series Recommendations optionally permit the use of analogue telephones, in parallel with digital ISDN terminals, on the two wire subscriber loop.

A question which may arise in Canada is whether the telephone companies should be required to support this option.

5.2.2.1 Analysis

The use of an analogue telephone, in parallel with the ISDN terminal, would complicate the subscriber loop, as follows:

- NT1, an electronic device, would have to specially designed to withstand the ringing current, and this would result in increased cost.

- Further to 5.2.1.1 above, the use of analogue telephones would further complicate the question of powering ISDN terminals.

It appears that suppliers, in their early ISDN designs, are not making provision for combined analogue/ISDN telephones. However, both of Canada's leading central office suppliers, Northern Telecom and Microtel, are arranging their ISDN exchanges such that analogue-only line circuits can be accomodated.

5.2.2.2 Conclusion

In light of the fact that the customer will likely be able to select between ISDN and analogue service, there does not appear to be a strong case for the combined analogue/ISDN telephone. Although it is a potential issue, it may not actually materialize; therefore, no further study of the question is suggested at this time.

5.2.3 NT1 Ownership & U Interface

The question of who should own NT1, the customer or the telephone company, will definitely become an issue in Canada.

A related, but still separate, question is which specification for the U interface should be used in Canada.

5.2.3.1 U Interface Background

The I-Series Recommendations assume that NT1 will be owned and provided by the telephone company, and that the customer equipment will connect at the S or T reference point. Accordingly, CCITT did not develop specifications for the U reference point; the decision on which specifications are used at the U reference point is left to the National Administration.

Because of the terminal attachment policy in the USA, the FCC ruled that the customer shall have the right to own and purchase NT1 in a competitive marketplace. It was then necessary to develop specifications for the U reference point. ECSA Technical Sub-Committee T1D1.3 was subsequently charged with the task of preparing the U interface specifications. The U interface specifications are are now in final draft form and are expected to be approved in the USA in the near future. They are based on the 2B1Q/ECH proposal discussed in item 2.4.4.4 above.

Because of manufacturing economies of scale that could be achieved and because of the benefits of wide-scale standardization in general, other countries are now studying the T1D1.3 U interface specifications, and are considering its adoption. CCITT is also studying the T1D1.3 specifications, and may recommend their adoption. On the other hand, since other U interface proposals are viable, particularly in Europe where average subscriber loop lengths are shorter than in North America, CCITT may choose to not issue any recommendation on the U interface. As noted in Section 2.4.4.4.1, CCITT plans to issue two Recommendations relating to the U reference point in the near future.

5.2.3.2 U Interface Analysis

Although Telecom Canada has not announced an official position, unofficial discussions with Telecom Canada members indicate that Telecom Canada will most probably adopt the T1D1.3 U interface specification. The position of the other telephone companies is not known; however, it is

expected that they will also opt for the T1D1.3 U interface specification.

The loop conditions in Canada are similar to those in USA, and no operating problems with the T1D1.3 U interface should be encountered in the Canadian environment.

Further, the spirit of the Canada - US Free Trade Agreement encourages common standards so that each country can provide products to the other's market.

Therefore, in Bartek's view, there appear to be no reasons to object to the use of the T1D1.3 U interface by Canadian telephone companies.

An official announcement of position by the Canadian telephone companies would be helpful.

5.2.3.3 NT1 Ownership Analysis

The question of who should own NT1 (the customer or the telephone company) is a more difficult one. The question is first examined for basic rate service and then for primary rate service.

5.2.3.3.1 Basic Rate Service

Although Telecom Canada has not announced an official position, unofficial discussions with Telecom Canada members indicate that Telecom Canada would prefer to own NT1. The position of the other telephone companies is not known; however, it is expected that they are also of the same opinion.

The main reason presented by the telephone companies is that their ownership of NT1 would give them a free hand in upgrading the technology of the U interface in the future. Examples of possible upgrades could include:

- enhancing the functions of the embedded operations channel
- changing from 2B1Q line coding to some superior method which might be developed in the future
- improving the echo cancelling hybrid

Arguments against this include:

- In the past, the telephone company has been slow to implement new technologies, and customer ownership of terminal equipment has been the catalyst.

- The central offices exchanges will be able to accomodate both analogue and ISDN lines, per the T1D1.3 U interface specification. If, in the future, a superior U interface technology should be developed, it is most probable that central office exchange suppliers will accomodate ISDNs lines of the old and new technology. Hence, customers wishing to upgrade from the old to the new technology will purchase the new NT1 and request the telephone company to change the line circuit.

One reason proposed for customer ownership of NT1 is that terminal manufacturers will then be able to integrate NT1 into the terminal for very little additional cost (less than with a discrete NT1). However, if a terminal with an integral NT1 were disconnected (which is very likely with portable terminals), the embedded operations channels and other M bit supervisory functions associated with the U interface would not be operable. This would result in alarms being generated at the central office. From this point of view, it would be best for NT1 to be a discrete device in basic rate service. Also, if NT1 were integral to TE1, then TE1 could not be used with NT2, unless NT1 was bypassed. In cases were NT2 is used, NT1 could be integral to NT2.

The implications of the Canada - US Free Trade Agreement must also be examined. In USA, NT1 will be sold to the public as an item of terminal equipment, under FCC standards. If, in Canada, NT1 were owned by the customer, the specifications would be established by TAPAC. Assuming compatible FCC and TAPAC standards for NT1, Canadian and USA suppliers could supply to both markets. If, on the other hand, NT1 were owned by the telephone company, then the telephone companies would define the standards for NT1, rather than TAPAC. If the telephone companies elected to use the FCC standards for NT1, USA suppliers would still be able to supply the Canadian market, but the telephone companies would be the customers. Only if the telephone companies elected to use some other standard, and this appears unlikely, would

USA suppliers would have difficulty in serving the Canadian market.

A final consideration is whether NT1 will be the subject of future innovation. If NT1 only performs the transmission line termination functions and provides maintenance and operations information to the telephone company, then it largely becomes a mute point as to who owns NT1. If, on the other hand, the competitive marketplace would foster innovative improvements which would provide a service enhancement for the user, there would be a strong case for customer ownership. If, for example, the customer were able to access the embedded operations channel, this might be an area of possible innovation.

The question of user access to the embedded operations channels is a matter being discussed in the USA. Some are proposing that the U interface specification be modified to permit the user to access to the embedded operations channels for the purpose of conducting loopback tests. This an area where the T1D1.3 U interface specifications might change before adoption in the USA.

5.2.3.3.1 Primary Rate Service

In primary rate service, the transmission system terminal equipment performs the functions of NT1 and delivers access lines to the PABX or LAN at the DS-1 rate.

Under current Canadian regulations, in cases where a DS-1 transmission system is used to connect a PABX and central office trunks, the telephone company provides the DS-1 terminal equipment. Continuing this policy in ISDN would mean that the telephone company would own NT1 in primary rate service.

However, in USA, user groups are lobbying for customer ownership of the DS-1 terminal equipment. If they are successful, and same policy is used in ISDN, the customer in USA will own NT1 in primary rate service.

Depending on the outcome in the USA, the question of primary rate NT1 ownership could also become an issue in Canada.

5.2.3.4 Conclusion

As can be seen from the above analysis, there are arguments for and against customer ownership of NT1. Bartek believes that NT1 ownership for basic rate service will definitely become an issue in Canada. NT1 ownership for primary rate service could also become an issue.

Early resolution of NT1 ownership for basic rate service would be most helpful to the Canadian telecommunications industry, as the industry is presently unsure as to which way to proceed. It is therefore suggested that the DOC, through TAPAC and in co-operation with the CRTC, undertake studies which will lead to a decision on the question.

5.2.4 North American Numbering Plan

5.2.4.1 Present Telephony Numbering Plan

The present North American Numbering Plan (NANP) for the telephony network is a closed numbering plan, structured as follows:

- numbering plan area (NPA) code: 3 digits
- central office (CO) code: 3 digits
- subscriber code: 4 digits

The formats for NPA and CO codes are NPX and NNX respectively, where:

- N can be from 2 to 9
- P can be 0 or 1
- X can be from 0 to 9

The majority of the NPA codes have geographical significance; however, a few codes have service significance, i.e. 800, 900, etc.

On international calls to North America, the digit "1" is used to designate North America; individual country codes are not used.

The NPA codes are controlled and issued by Bell Communications Research, Inc. (Bellcore); the central office codes are controlled and issued by the dominant exchange carrier in each NPA.

5.2.4.2 Future ISDN Numbering Plan

The ISDN numbering format recommended by CCITT in Recommendation E.164 allows a maximum of fifteen digits as described in item 2.6.1. The ISDN numbering plan incorporates the existing telephony numbering plan (E.163), which only allows a maximum of twelve digits.

In North America, the ISDN numbering questions are being examined by the ISDN Numbering Forum (INF) in the USA. Bellcore is a major participant in the INF, and is responsible for allocation of NPA codes. Telecom Canada, Teleglobe, and CNCP have been attending the INF meetings. The DOC has not been directly involved, but is monitoring the situation.

At the INF, the telephone companies have decided to use a common numbering plan for the ISDN and telephony networks, i.e. the North American numbering plan will be expanded to include ISDN numbers. However, at the present time, telephony exchanges can only accomodate twelve digits. Therefore, until such time (tentatively 1995) that telephony network exchanges have been modified to handle fifteen digits, North American ISDN numbers will be accomodated within the structure of the existing North American numbering plan.

Use of the existing telephony numbering plan until 1995 necessitates that additional NPA and CO codes be assigned to accomodate ISDNs. A major question is how to accomodate non-local exchange ISDN carriers. It has been proposed that they be assigned NPA and/or CO codes. Additionally, cellular radio operators in USA are lobbying for CO status. There are fears that the CO codes will be exhausted in certain NPAs. There are others that feel that the geographic significance of NPA codes should be maintained. Some are proposing that the distinction between NPA and CO codes be removed to make more NPA and CO codes available. Bellcore recently issued guidelines by which eligibility for NPA and CO codes can be assessed; some are challenging Bellcore's right to issue such guidelines. It is understood that Bellcore is planning to issue a Technical Advisory in March

1988 outlining its latest proposal for pre-1995 numbering.

To-date, there is no consensus on how numbering in North America is to be handled before and after 1995. The North American telephone industry appears to be at a stalemate. Some INF members are of the opinion that the matter will eventually come before the FCC for resolution.

5.2.4.3 Conclusion

As noted above, Telecom Canada, Teleglobe, and CNCP have been attending the INF meetings, and the DOC has been monitoring the situation. If the matter goes before the FCC in the USA, then there will be a need for the Canadian Government to become directly involved.

However, even if the matter does not go before the FCC, it may be desirable for the DOC to become more directly involved. Although Telecom Canada, Teleglobe, and CNCP are representing Canada at the INF meetings, they are primarily representing operating company interests, rather than the interests of Canadians at large. Since the decisions to be made at the INF will affect the Canadian telecommunications industry for years to come, it is suggested that the DOC consider taking a more direct role.

It is also suggested that the DOC consider conducting independent investigations regarding ISDN numbering for Canada for the pre-1995 and post-1995 periods. One specific question to be answered is whether Canada should have its own country code in ISDN. Such a study should consider the technical and economic implications, as well as the benefits to the Canadian telecommunications industry in general.

5.2.5 Network Interworking

An ISDN is to function with:

- other ISDNs
- telephony networks
- packet networks
- telex networks

The use of different numbering plans is only one problem to be solved. Also to be resolved are the physical and protocol differences between the networks.

Telecom Canada is examining methods by which the ISDNs to be established by the individual members will interwork, i.e. between ISDNs, between an ISDN and the PSTN, and between and ISDN and the packet network. However, it appears that little definition work is being done on interconnection between Telecom Canada and other networks, such as:

- interworking between the independent telephone companies and Telecom Canada
- interworking between CNCP and Telecom Canada
- interworking between future digital cellular systems and Telecom Canada
- interworking between enhanced services providers and other carriers

This is an area in which the DOC could make a valuable contribution. Just as the DOC issued IS-01, which outlines interconnection guidelines between cellular radio systems and the telephone network, the DOC could also likewise develop guidelines for the above situations. This would help to ensure that the methods of interconnection are fair and equitable.

5.2.6 Quality of Service & Network Performance

5.2.6.1 Present Situation

At the present time, independent consultants conduct public surveys on behalf of the CRTC to determine the public's perception of the level of

service provided by the telephone companies. This subjective test is referred to as the quality of service indicator.

The telephone companies also conduct objective tests internally to evaluate the level of network performance.

In the present environment, Type II carriers providing enhanced services, lease facilities from Type IA and, in some cases, Type IB, IC, and ID carriers. In an ISDN environment, the same situation is expected to prevail but at an increased level.

5.2.6.2 Conclusion

The quality of service becomes difficult to evalulate when multiple carriers are involved in providing an overall service to the customer. Not all carriers construct and maintain their facilities to the same standards, and there is the danger that all carriers involved in providing an overall service will be tainted by the company using the lowest standards. Consequently, it is felt that it will be necessary to revise or expand the manner in which the quality of service indicator is determined in Canada.

In fact, it may preferable to shift from subjective tests to objective tests. This would require putting minimum network performance standards in place, as well as verification procedures. It is recognized that establishing the minimum standards and verification procedures would be major task; however, it would provide a better measure of performance which will be needed with the increased use of multiple carriers. It is suggested that the DOC investigate the feasibility of establishing minimum standards.

5.2.7 Protection Standards

5.2.7.1 Present Situation

When the policy permitting the attachment of customer owned terminal equipment was introduced in Canada, it was necessary to establish minimum standards to which the terminal equipment must conform in order to protect the network and craftmen. On behalf of TAPAC, the DOC has issued the following documents:

- o CP-01: Certification Procedure
- o CS-01: Certification Standard for Voice Type Terminal Equipment and Connectors
- o CS-02: Certification Standard for Data Type Terminal Equipment and Connectors
- o CS-03: Certification Standard for Terminal Equipment, Systems, Network Protection Devices and Connection Arrangements
- o CS-04: Certification Standard for Radio Common Carrier Paging Control Terminal Equipment
- o CS-05: Certification Standard for Terminal Equipment Attached to the Canadian Telex Network

The purpose of these standards is to ensure that the terminal equipment will not cause:

- o electrical hazards to public and operating company craftsmen
- o damage to network components
- o interference with normal functioning of network equipment, including billing equipment
- o degradation of service to other users of the network

These standards have been written strictly from the point of view of network protection, and do not guarantee that the equipment will perform to any particular standard. In addition to specifying the network protection standards, these standards also specify the manner in which the certification tests are to be conducted.

5.2.7.2 Network Protection & ISDN

With the introduction of ISDN in Canada, it will be necessary to examine the existing network protection standards to determine what changes and additions are necessary for ISDN terminal equipment. However, before this can be done, it will be necessary to determine the point at which customer owned equipment will connect to the

network in Canada, i.e. the S/T or U reference point. As noted earlier, it is important that this question be decided soon in Canada, and it is suggested that the DOC, through TAPAC and with the co-operation of the CRTC, undertake studies to resolve the question.

Network performance specifications are more stringent than network protection specifications. In the past, network performance specifications could not be adopted in lieu of network protection specifications because this would have inhibited competition in the terminal equipment market, and, therefore, a clear distinction between network performance and network protection was made. With ISDN terminals, it may not be as easy to make such a clear distinction between network performance and network protection.

ISDN terminal equipment, whether connecting at the S/T or U reference point, will have to operate within rigid specifications in order to function with the network; otherwise, the terminal will waste network resources. This applies to Layer 1, 2 and 3 functions. Whereas with traditional terminal equipment, it was possible to accept terminal equipment providing lower quality as long as it did not harm the network, with ISDN terminals the emphasis will shift from physical harm to waste of network resources. The ISDN terminal will have to meet certain performance parameters in order to function at all with the network, and in meeting the functional parameters, most (if not all) of the network protection parameters will have been fulfilled.

In order to compile a certification standard for ISDN terminals, it will be necessary to review the interface specifications for the S/T and U (if the U interface is adopted) reference points. Where the performance parameters must be met in order for the equipment to function properly with the network, the specific clause of the S/T or U interface specification may be adopted for network protection purposes. Where performance parameters do not need to be met in order for the equipment to function, then network protection standards must be developed.

Test procedures are not included in the S/T and U interface specifications, and these will have to be developed by TAPAC.

TAPAC could commence work immediately on the certification standards for terminal equipment connecting at the S/T and U reference points.

5.2.8 ISDN Billing

It is planned that, in an ISDN, a customer will be able to determine in advance what costs he will incur for a particular service. Some terminal suppliers also plan to provide a real-time notification of accumulated charges. Desirably, customers would receive one monthly bill for all ISDN services.

Such billing services could be provided quite easily where only one carrier is involved in the service. However, in cases where multiple carriers are involved, e.g. a Type IA and a Type II carrier or a Type IA, Type IB, and a Type II carrier, it will be extremely difficult to co-ordinate overall costs for a service.

It may be that, if a customer wishes to use multiple carriers, he will have to accept multiple billings.

5.2.9 Integration of CATV & ISDN Access

With the cost of optical fibres continuing to drop, telephone companies are projecting that not too far in the future, it will be cost-effective to bring optical fibres, rather than copper wires, to the user. Such an eventuality will bring broadband ISDN access to the home. When that occurs, it will be necessary to consider whether ISDN access lines and CATV distribution plant should be integrated.

Since the telephone and CATV industries are both regulated by the CRTC, the DOC will be asked to provide technical support on the question. It will therefore be necessary for the DOC to undertake studies to examine the technical, economic, and social aspects of various integration scenarios, such as:

- o telephone company provision of transport for CATV services
- o CATV company provision of transport for telephone services
- o separate company provision of transport for both telephone and CATV services

5.2.10 ISDN & Tariffs

As ISDN is implemented in Canada, we are likely to find that many of the tariffs, which were established over a period of many years for services of the traditional networks, need to be modified. It is not Bartek's intention in this report to suggest the nature of such revisions to the present tariff structure, but rather to only identify instances were tariff revision might be necessary.

5.2.10.1 Access Pricing

Presently, most telephone subscribers pay a fixed monthly rate for access to the central office plus local telephone service. With the subscriber line, the customer is also able to access dial-up data services at rates up to 1200 bps. If higher data rates are required or a better quality line is needed, the customer must obtain a data access line at a somewhat higher price.

A customer subscribing to ISDN basic rate access with 2B+D channels will have a greater access capability with one ISDN line than the present subscriber has with a telephone and a data line. It will be necessary to determine the basis on which he should pay for the integrated access. Relating the tariff to the cost of provision, rather than the value of the service, would suggest that the ISDN access line should be priced lower than the present telephone and data line.

Although the ISDN subscriber will have a greater access capability than he presently does, there will remain customers that only need basic voice service, and these customers will object to paying more for increased access capability. One solution for the near term is to continue using an analogue line; it is expected that ISDN central office exchanges will support analogue lines for some time. In the long term, however, after analogue

lines are abandoned, it will be necessary to determine a price for the subscriber that only needs a single voice line.

5.2.10.2 Voice vs Data Services

At the present time, the long distance charges are a function of distance and time. Packet charges are distance insensitive within Canada, and are a function of number of packets transmitted.

With the advent of fast-packet switching, wherein the voice and packet services will be integrated, we shall have to reconsider the long distance tariff structure.

5.2.10.3 DS-1 Rates

At the present time, Canadian customers using DS-1 access to central office trunks must pay for the channelizing costs at their premises, even if the PABX is capable of interfacing to the transmission system directly at the DS-1 level. The effect of this policy is that the breakeven point between DS-1 service and multiple single lines is increased.

The continuation of this policy will impede the introduction of ISDN primary rate service. Since, customers in the USA do not pay for channelizing costs (unless channels are used), it is expected that users groups in Canada will lobby for a change in policy.

5.2.10.4 Supplementary Services

One of the most difficult areas in which to establish rates will be with ISDN supplementary services. This is because it will likely be very difficult to determine the cost to the telephone company for supplementary service provision.

5.2.10.5 Provision of Service at the T Interface

Bellcore, in its Technical Advisory TA-TSY-000397, dated May 1987, has proposed that where:

- the network has been requested by the customer to provide (on a non-regulated basis) the NT1 function

  and

- cable plant and distance limitations permit

LT and NT1 functions may be collapsed into a single line unit that provides a T interface to the customer.

This means that the U interface would not be used and that the customer would receive service at four-wire.

It is not known whether such a configuration is being contemplated by the Canadian telephone companies. If so, a question that will arise is whether the cost of T access service should be priced the same or less than U access.

5.3 DOC's Role In Telecommunications

In matters concerning radio frequency spectrum, the DOC excercises its powerful mandate. Under the authority of the Minister of Communications, spectrum management rules made by the DOC become law throughout Canada. Violations are punishable under the Criminal Code of Canada. No provincial or municipal governments are exempt from the DOC's spectrum management rules.

In terminal attachment matters, the DOC undertakes a major role, but with less direct authority. The DOC, through TAPAC, establishes the minimum technical requirements for terminal equipment in order to adequately protect the network. The CRTC and PUBs, in turn, instruct the telecommunications companies to implement the TAPAC recommendations.

In telecommunications matters other than spectrum management and terminal attachment, the approach taken by the DOC has largely been to let industry take the lead in making technical decisions and setting technical standards, with the DOC only monitoring industry developments. Although the Minister of Communications possesses wide powers and has the authority to become directly involved in any telecommunications matter, it has generally not been the policy to do so.

To-date, this philosophy has worked quite well, and Canadians enjoy telecommunications facilities that rate with the best in the world. However, this philosophy has resulted in the incorrect public perception that the DOC is only responsible for frequency spectrum management and terminal attachment matters. Further, Bartek believes that a more direct role in areas other than frequency spectrum management and terminal attachment would ensure that the interests of users and small operating companies are sufficiently represented. Examples of situations in which direct involvement may be desirable are as follows:

- The CCITT leaves numerous aspects of ISDN up to the National Administration. The DOC is the National Administration in Canada; however, in practice, the major telephone companies will likely decide which national options will be selected.

- The North American ISDN numbering plan will affect all Canadians for years to come, and

Canada's input to the INF is via major operating companies, with the DOC only monitoring developments.

- The major telephone companies will likely have a significant, if not definitive, role in determining which particular U and V interface standards will be used in Canada.

- Network interconnection methods with small operating companies will be determined by the major operating companies.

Bartek believes that, with the introduction of ISDN and the greater use of multiple carriers, many important technical decisions will have to be made, and that the DOC should be more directly involved in making these decisions than it has been in the past. Further, as noted in Section 3.0, if the Canada - US Free Trade Agreement is implemented, there will be a need for the DOC to be more directly involved than in the past to ensure that trade agreement violations are avoided.

REFERENCES

CCITT I-Series Recommendations (Red Book)

ISDN Planner's Guide, by AT&T

ISDN Technical Overview, by Telecom Canada

ISDN Terminal Standards Reference Manual, by Microtel Pacific Research Limited

Draft Standard for ISDN Basic Access Interface for Application at the Network Side of NT, Layer 1 Specification, by Technical Sub-Committee T1D1.3

Technical Advisory TA-YSY-000397, by Bell Communications Research, Inc.

White Paper on V-Interface Standards, by GTE Service Corporation

Conference Record of the IEEE Globecom '87 Conference

Conference Record of the 37th IEEE Vehicular Technology Conference

CCIR IWP 8/13 Draft Report on the Future Public Land Mobile Telecommunications System, Melbourne, March 11-18, 1987

Mobile Services in the Year 2000 and Beyond: Personal Thoughts, by Peter W. Nurse, NovAtel Communications Ltd.

General Agreement on Tariffs and Trade

Canada, The GATT and the International Trade System, by Frank Stone

Canada - US Free Trade Agreement

The Canada - US Free Trade Agreement Synopsis

Numerous DOC Publications

Numerous CRTC Publications

Numerous Manufacturer Publications

CACC / CCAC
91735

FINAL REPORT FOR THE STUDY OF THE IMPACT OF ISDN SERVICES...

P
91
C655
F5678
1988

DATE DUE

FEB FEV 20 1989			
DEC 14 1992			