Agriculture
Canada

Handling Agricultural Materials

Size reduction and mixing

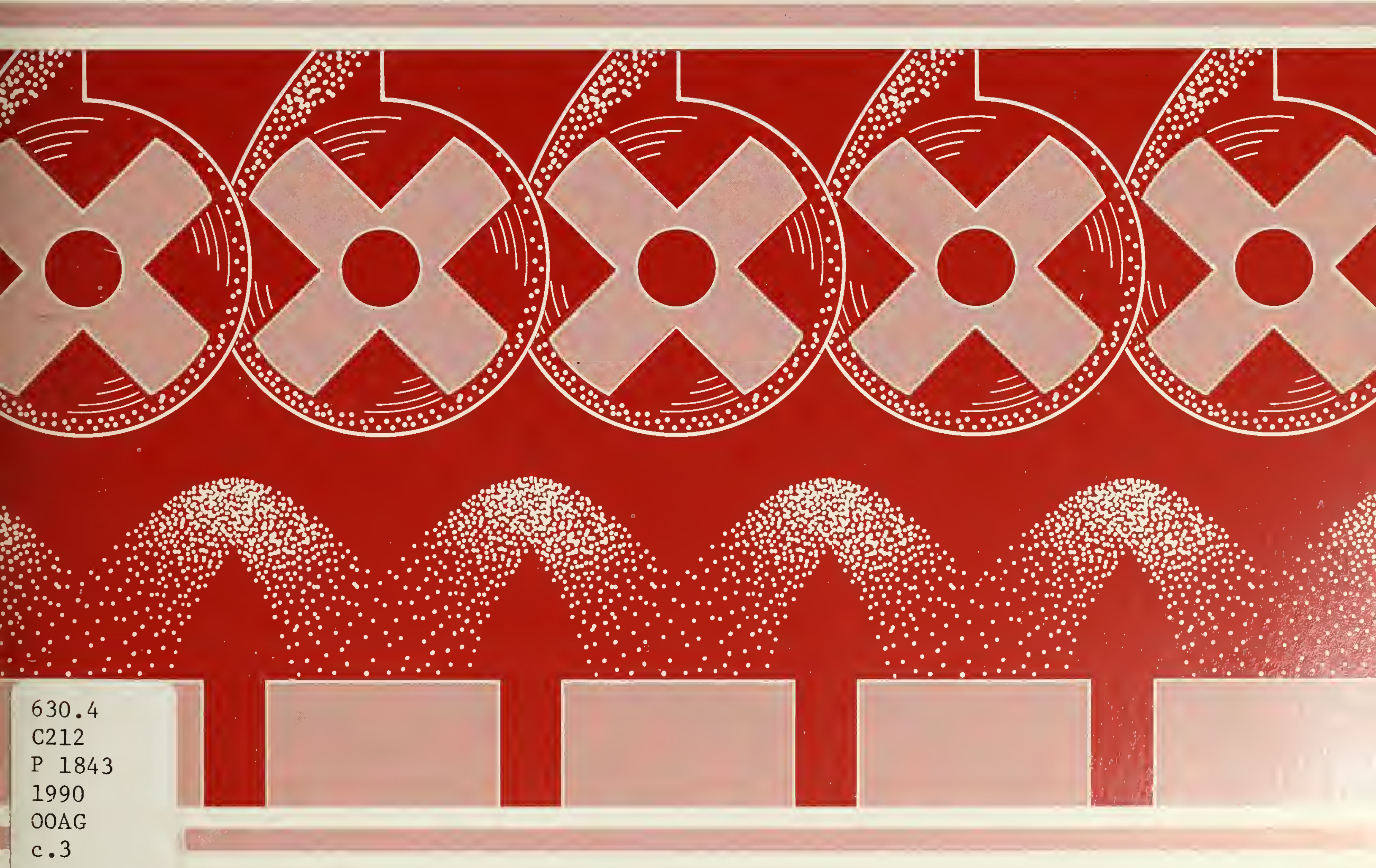

Canada

Handling Agricultural Materials

Size reduction and mixing

Research Branch
Agriculture Canada

Publication 1843/E
1990

Cat. No. A15-1843/1990E
ISBN 0-660-13446-2
Printed 1990

Available in Canada through authorized bookstore agents
and other bookstores or by mail from

Canadian Government Publishing Centre
Supply and Services Canada
Ottawa, Canada K1A 0S9

Price is subject to change without notice

Previously published under the title
Canadian Agricultural Materials Handling Manual.
3.2 Size Reduction and Mixing.
Agric. Can. Publ. 5002.

Also available in French under the title
Manutention de produits agricoles :
Appareils de trituration et de mélange

Canadian Cataloguing in Publication Data

Handling agricultural materials. Size reduction and mixing

(Publication ; 1843/E)

Previously published under title: Canadian agricultural materials handling manual. 3.2. Size reduction and mixing.
"Prepared by UMA Engineering Ltd."–Foreword.
Includes bibliographical references.
Cat. No. A15-1843/1990E
ISBN 0-660-13446-2

1. Size reduction of materials. 2. Milling-machines. 3. Mixing machinery. 4. Agricultural machinery. I. Rudnitski, Sharon. II. Birenbaum, Rhonda. III. Heslop, L. IV. UMA Engineering Ltd. V. Canada. Agriculture Canada. Research Branch. VI. Series: Publication (Canada. Agriculture Canada). English ; 1843.

TJ1225.H3 621.914 C90-099102-X

Staff editor
Sharon Rudnitski
Research Program Service

Contract editor
Rhonda Birenbaum

Scientific adviser for contract research
L. Heslop
Engineering and Statistical Research Centre

CONTENTS

Tables

Figures

FOREWORD

Handling Agricultural Materials is produced in several parts as a guide to designers of materials-handling systems for farm and associated industries. Sections deal with selection and design of specific types of equipment for materials handling and processing. Items may be required to function independently or as components of a system. The design of a complete system may require information from several sections of the manual.

This section was prepared by UMA Engineering Ltd., Winnipeg, Man., for the Canada Committee on Agricultural Engineering Services of the Canadian Agricultural Services Coordinating Committee.

1 FUNDAMENTAL PRINCIPLES

The general term size reduction includes the mechanical processes of cutting, shearing, crushing, grinding, and milling feed grains. These processes expose more surface area for digestion without causing any noticeable change in the chemical properties of the material. At the same time, size reduction facilitates uniform mixing. And although uniformity in size and shape of the reduced particles is usually desired, it is seldom attained.

The various reduction processes can be defined this way:

- Cutting separates or reduces particles by forcing a knife edge through the material.
- Crushing applies a compressive force to the particles.
- Shearing combines cutting and crushing.
- Grinding employs an impact force to reduce the particles.
- Milling, a general term, reduces grain to meal or flour. It also describes the processes of dehulling, scarifying, polishing, sorting, and mixing, as well as certain chemical reactions. Milling sometimes also refers to the separation of fibers in flax, hemp, and ramie.

Hammer mills and roller mills are the two most common machines used for reducing particle size in Canadian agriculture. Hammer mills are used for manufacturing pellets or extruding ground grain. Hammer mills are also used to produce finely ground materials. In contrast, roller mills yield material relatively uniform in size and only slightly pulverized.

The materials to be reduced vary greatly in rheological properties. Yet, the method of reduction must produce the required end product as efficiently and economically as possible.

Mixing disperses ingredients to a specified formulation so that any sample of the whole contains each component in the same proportion. Accurately mixing materials of widely varying properties is a difficult task. Densities of dry ingredients in feed milling can vary sevenfold. Differences in particle size, shape, density, electrostatic charge, and cohesion can cause segregation. What's more, liquids also have different viscosities and densities and impart various characteristics to dry products when mixed with them.

1.1 Size characteristics

Evaluate the performance of a machine used to reduce the size of material on the basis of these characteristics:

- throughput capacity
- power requirements per unit of reduction
- quality of the material after reduction
- degree of uniformity of the resulting material

Performance evaluation requires a method of assessing the size characteristics of various materials. For spherical or cubical particles, refer to the American Society of Agricultural Engineers standard ASAE S319.1, "Method of Determining and Expressing Fineness of Feed Materials by Sieving." For chopped hay or rolled or flaked grain use the American Society for Testing and Materials (ASTM) standard E11. This standard defines a set of sieves suitable for measuring materials in which elongated particles dominate. Table 1 lists the ASTM sieve sizes.

In evaluating material reduction, consider a representative sample weighing 100 g. Use logarithmic probability paper to plot the cumulative percentage of weight retained on each sieve versus the size of the sieve opening. The point where the 50% cumulative percentage intersects the resulting straight line represents the geometric mean diameter.

The size of particles is reported in terms of geometric mean diameter and geometric standard deviation by weight. To calculate these values, use the following equations:

Table 1 Sieve designations and sizes

U.S. standard sieve number	Nominal sieve opening (mm)
4	4.76
6	3.36
8	2.38
12	1.68
16	1.19
20	0.841
30	0.595
40	0.420
50	0.297
70	0.210
100	0.149
140	0.105
200	0.074
270	0.053

$$D_g = \log^{-1}\left[\frac{\Sigma (W_i \log \bar{D}_i)}{\Sigma W_i}\right]$$

$$s_g = \log^{-1}\left[\frac{\Sigma W_i (\log \bar{D}_i - \log D_g)^2}{\Sigma W_i}\right]^{0.5}$$

where D_i = diameter of sieve openings of the ith sieve

D_{i+1} = diameter of the openings in the next larger than ith sieve (just above in set)

$\bar{D}_i$ = geometric mean diameter of particles on ith sieve

$= (D_i \times D_{i+1})^{0.5}$

D_g = geometric mean diameter

s_g = geometric standard deviation

W_i = weight fraction in ith sieve

Σ = summation symbol

Material passing U.S. sieve no. 270 (Table 1) is considered to have a mean diameter of 44 µm.

Plotting data on logarithmic probability graph paper generates graphical solutions for geometric mean diameter and log-normal standard deviation. Fig. 1 shows an example where:

$D_g = D_{50}$

= particle diameter at 50% probability

$s_g = D_{84} / D_{50}$

$= D_{50} / D_{16}$

= particle size at 84% probability divided by D_g

= D_g divided by particle diameter at 16% probability

or D_g = 350 µm

s_g = 640 / 350

= 350 / 191

= 1.83

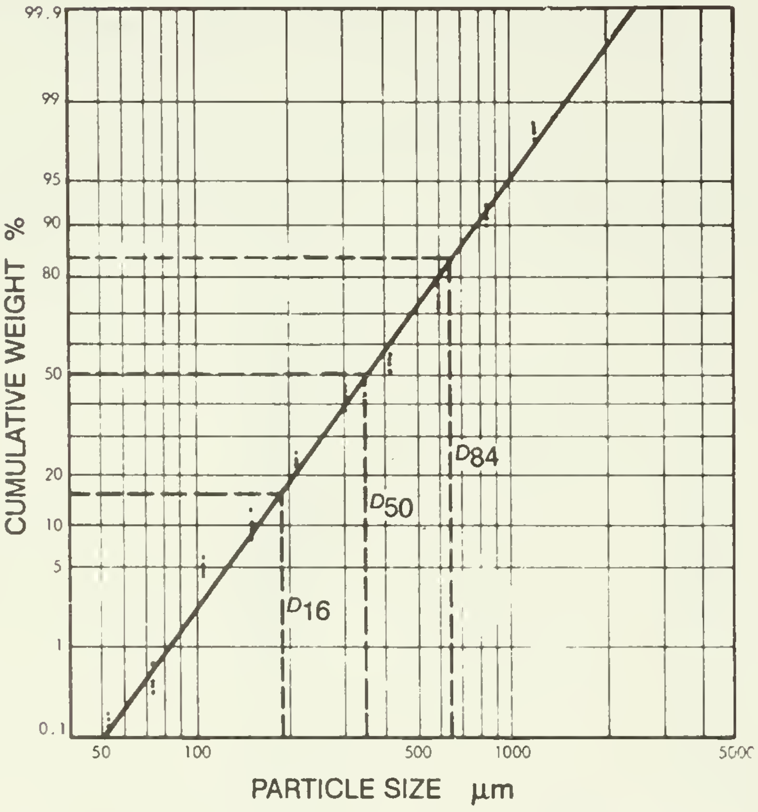

Fig. 1. Lognormal distribution for sorghum grain ground through a screen of 3.18 mm.

Table 2 presents particle sizes for the terms coarse, medium, and fine grind. The table also lists data for the modulus of fineness, which represents a weighted average of particle size. This measurement, although no longer endorsed by ASAE, still appears in product literature.

1.2 Kernel structure

A kernel of grain is a one-seeded fruit consisting of the germ, endosperm, and seed coat (Fig. 2). Sometimes nucellar tissue fills the space between the endosperm and the seed coat. The pericarp, or fruit coat, surrounds the kernel and strongly adheres to it.

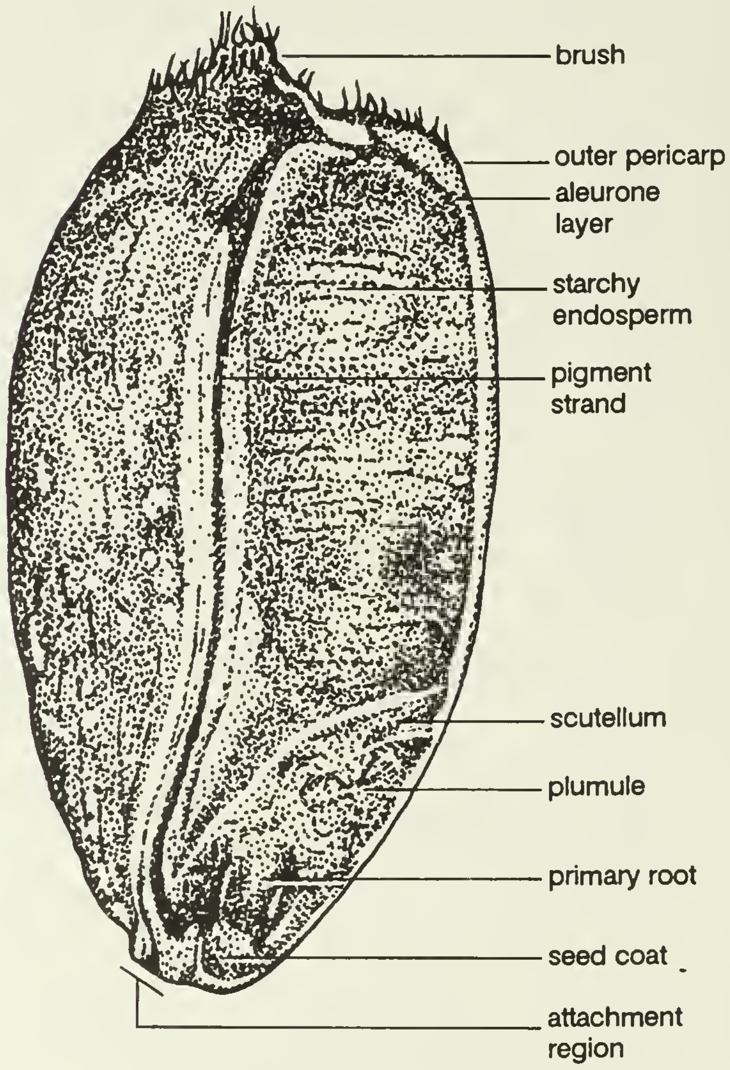

Fig. 2. Kernel structure of wheat.

Table 2 Quality of grind as related to particle size and modulus of fineness

Material	Whole grain	Coarse grind	Medium grind	Fine grind	Very fine grind
Grains					
Ear corn	–	6150 (4.8)	2680 (3.6)	1160 (2.4)	770 (1.8)
Shelled corn	14 100 (6.0)	6150 (4.8)	2680 (3.6)	1160 (2.4)	770 (1.8)
Barley	7070 (5.0)	3790 (4.1)	2030 (3.2)	1090 (2.3)	620 (1.5)
Oats	5000 (4.5)	2870 (3.7)	1650 (2.9)	950 (2.1)	580 (1.4)
Soybeans	14 100 (6.0)	6150 (4.8)	2680 (3.6)	1160 (2.4)	770 (1.8)
Wheat	7070 (5.0)	3790 (4.1)	2030 (3.2)	1090 (2.3)	620 (1.5)
Roughages					
Alfalfa hay	–	3540 (4.0)	1890 (3.1)	1020 (2.2)	580 (1.4)
Corn fodder	–	10 000 (5.5)	4060 (4.2)	1650 (2.9)	– –

Note: The numbers listed in parentheses indicate the values for modulus of fineness.

The pericarp forms a major part of what the miller knows as bran. It is composed of the outer epidermis and the inner mesocarp or hypodermis. Inside the hypodermis is the tribe cell layer. Tribe cells cover the entire kernel in corn (Fig. 3) but only certain parts of wheat and other grains. The outer surface of the epidermis is cutinized, making it relatively impervious to moisture.

The epidermis and hypodermis have no intercellular spaces. The closely adherent, thick-walled cells that make up these layers form a rigid, tubular domed arch that provides the kernel with good structural properties. In fact, the strength of the pericarp and the possibility of removing it in large pieces depend on these structural properties.

The endosperm is a continuous mass of tissue, in contrast to the pericarp, seed coat, and nucellar tissues which are discontinuous layers that adhere to one another. The endosperm cells of the outer layer are cubical in shape, have thick walls, and contain no starch. These cells, called aleurone cells, contain protein and oil. They are part of the bran.

The cells of the starchy, inner layer of endosperm are large and irregular, with little or no intercellular space. They are elongated with long axes radiating horizontally from the centre.

Milling breaks up endosperm cells. Less force is required to break the cell walls in the inner endosperm than in the outer because the inner cells contain chiefly starch whereas the outer cells contain chiefly protein. Also, the outer cells are smaller and their walls are thicker.

The microstructure of endosperm cells also affects milling. Within each endosperm cell lies starch granules embedded in a proteinaceous matrix. Particles of hard wheat flour are often composed of these endosperm cells. In soft wheat, the proteinaceous matrix is weaker, and the flour consists of individual starch granules plus pieces of the matrix.

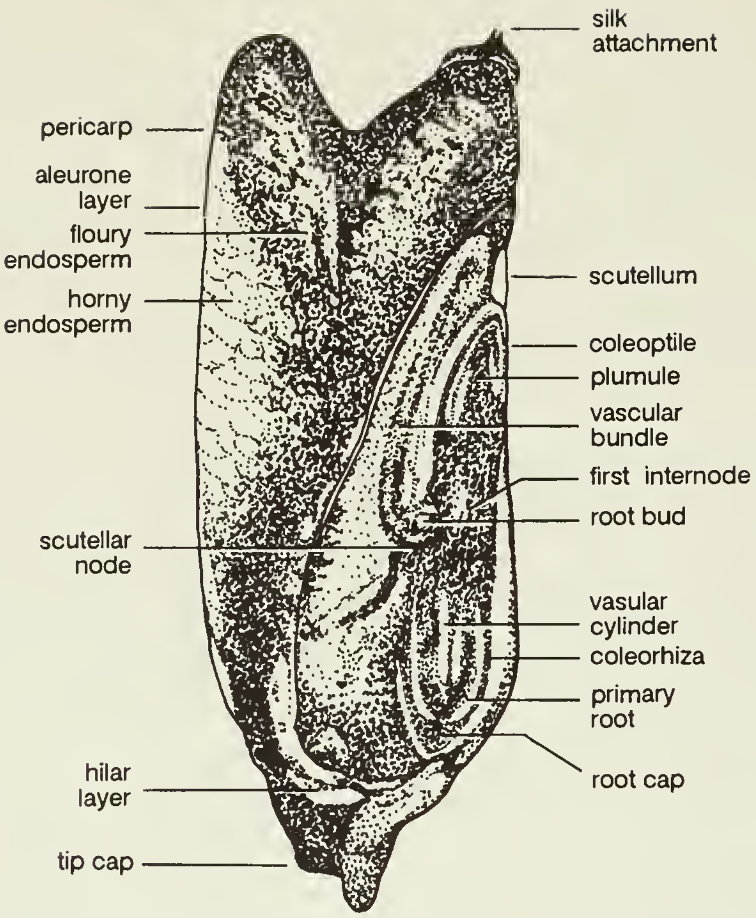

Fig. 3. Kernel structure of dent corn.

Dry milling produces wheat flour from the starchy endosperm of wheat kernels. However, the irregular thickness of the aleurone layer makes it difficult to scrape away all of the starchy endosperm in dry milling. Corn, on the other hand, mills more easily. The starchy endosperm of corn yields corn starch in wet milling and corn flour in dry milling.

The germ of the cereal grain kernel consists of the embryonic axis and the scutellum. The embryonic axis is an embryonic plant that develops at germination. The scutellum serves as a feeding organ for the germinating seed. The germ contains little starch, but a great deal of oil and protein. It is the source of wheat germ and corn oil. Because the germ is a separate structure, it easily detaches from the other structures of the kernel.

1.3 Mechanical and biological reduction

Mechanical reduction of the particle size of animal feeds enhances the animals' biological size-reduction processes, namely chewing and digestion. By striking the correct balance between the mechanical and biological regimens, operators can maximize the value and net returns from the feed. The balance point is reached when further mechanical processing fails to reduce the effort required by the animals to digest the food.

Mechanical size reduction physically disrupts the seed and aids biological processes by:

- increasing palatability
- reducing chewing
- increasing availability of starch for food energy
- increasing availability of nutrients

Excessive mechanical reduction, however, can lead to reduced feed conversion. For example, in some animals, fine grinding causes the feed to pass through the animal more quickly than normal. The feed does not stay in the digestive tract long enough for the fiber to be effectively digested.

The best method of mechanical reduction and the optimum size of reduced particles depend on the type of feed and the kind of animal involved. Table 3 summarizes information pertinent to making decisions regarding feed processing.

However, the ultimate level of mechanical size reduction depends mainly on net monetary return. Improvements in feed conversion afforded by mechanical processing must exceed the cost of processing to justify costs and return a profit.

2 REDUCTION METHODS

Reducing the size of grain particles in feed manufacturing is important for several reasons:

- to limit the amount of feed passing through the animal undigested
- to remove unpalatable waste from feed
- to increase palatability of feed
- to facilitate mixing and balancing of rations
- to increase digestibility of feed by allowing more intimate mixing of feed with digestive fluids
- to improve pellet quality

In feed manufacturing, two systems are most common for reducing particle size: hammer mills and roller mills.

2.1 Hammer mills

2.2 *Design and operation* The hammer mill is the most popular machine used to reduce the size of feed particles. It grinds both grains and forages.

Table 3 Process recommendations for livestock feed

Animal	Grain	Forage	Comments
Beef cattle	Dry or steam roll, or grind coarsely Fine grinding is not recommended as it can increase the incidence of ruminal parakeratosis in feedlot cattle	Long hay satisfactory for other than commercial feedlots Chopped (50 mm), cubed or pelleted forage in commercial feedlots or where hay quality is poor. This kind of forage handles easily and results in minimal wastage Fine grinding of hay decreases digestibility	Dry or steam rolling or coarse grinding of grain equally suitable for most beef cattle Grain need not be processed for calves under 6 months because they masticate feed thoroughly
Dairy cattle	Grinding is simplest and most widely used processing method Dry or steam roll, or grind coarsely for dry cows, young stock, and low-producing cows	Long hay, cubes, or chopped silage	Finely ground roughage results in reduced rumen acetate production and lower milk fat production
Sheep and goats	Processing not required unless seeds are hard or teeth are poor	Chop to 50 mm long	Sheep and goats masticate their feed more than cattle so processing is not required
Swine	Finely grind corn, oats barley, and grain sorghum Medium to coarse grind is preferred for wheat because fine grinding makes it pasty and less palatable	Legumes to be used in mixed feed should be finely ground	Fine grinding can cause bridging in self feeders Fine-ground feed has been associated with stomach ulcers
Poultry	Grind mash medium fine	Grind hay	
Horses	For horses with good teeth processing improves the value of oats 5 %	Long hay	Horses should not be fed dusty feed

Source: Ensminger and Olentine (1978).

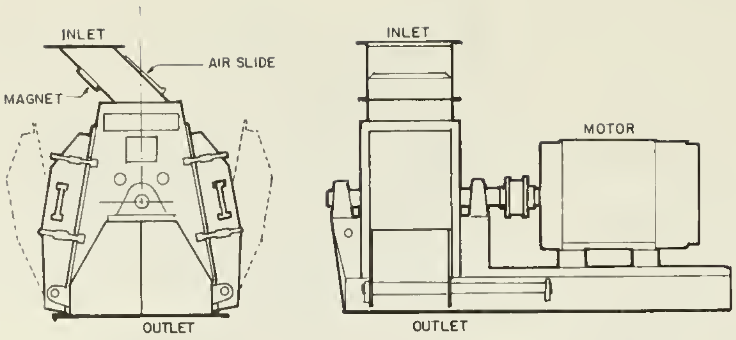

Fig. 4. Hammer mill detail.

Fig. 4 shows two views of a typical hammer mill. The grinding action results from the impact of free-swinging hammers that rotate on a shaft. The hammers strike the material as it enters the mill and wherever it encounters an obstruction that redirects its flow into the hammers' path.

Material for grinding enters the hammer mill from the top. At the inlet, various devices control the feed rate, remove tramp metal and other foreign material, and provide an air inlet.

Then, as the material moves into the grinding chamber it is struck by the rotating hammers. The reduced particles then begin to rotate in the chamber, guided by the shape of the screen and driven by the hammers. A moving layer of material develops. Its inner portion moves at a high velocity because of the nearby hammers whereas the outer portion is slowed because of friction with the screen. When particles adjacent to the screen reach a size smaller than the screen opening and slow sufficiently, they fall through the screen and are discharged from the grinding chamber. Fig. 5 illustrates particle motion between the screen and the hammers.

In most hammer mills, material enters the mill on a near tangent to the hammer arc or drops directly down onto the hammer. Fig. 6 shows two common inlet designs (*a* and *b*) and the impact locations for full-screen grinding chambers.

A design feature now popular in hammer mills is a cutting plate, sometimes called the breaker bar or breaker plate. This device reduces the particle size before it enters the screen area.

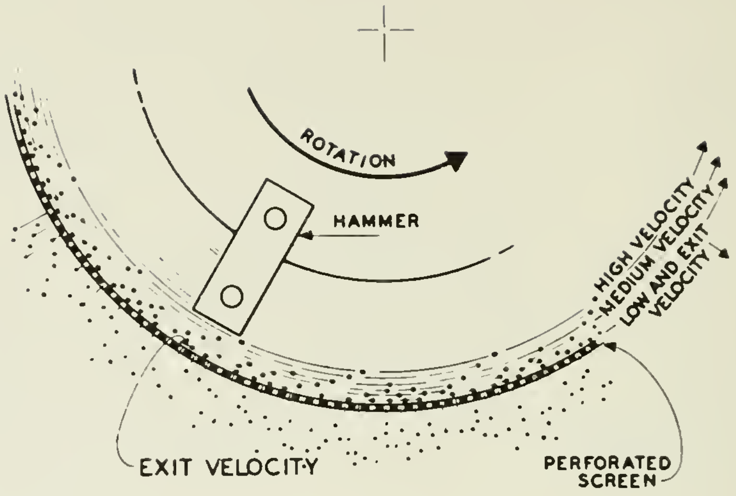

Fig. 5. Particle motion between screen and hammers.

As a result, the hammer mill can achieve a higher throughput capacity with a smaller screen area. A cutting plate is especially useful for grinding fibrous or otherwise hard-to-grind material. The cutting plate also interrupts particle flow and directs material into the path of the hammers. Fig. 6*c* illustrates this style of grinding chamber and the characteristic particle motion.

To operate a hammer mill most efficiently, pay attention to these items:

- type of material
- screen and hammer design
- speed of rotation
- method of conveying finished material
- effect of the material's moisture content on grinding
- method of feeding
- installation and maintenance

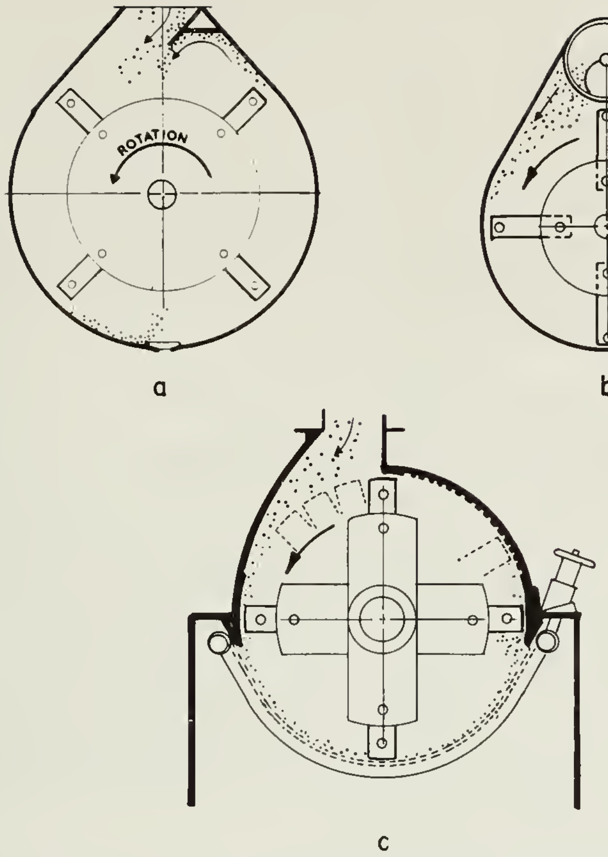

Fig. 6. Inlet design and grinding locations.

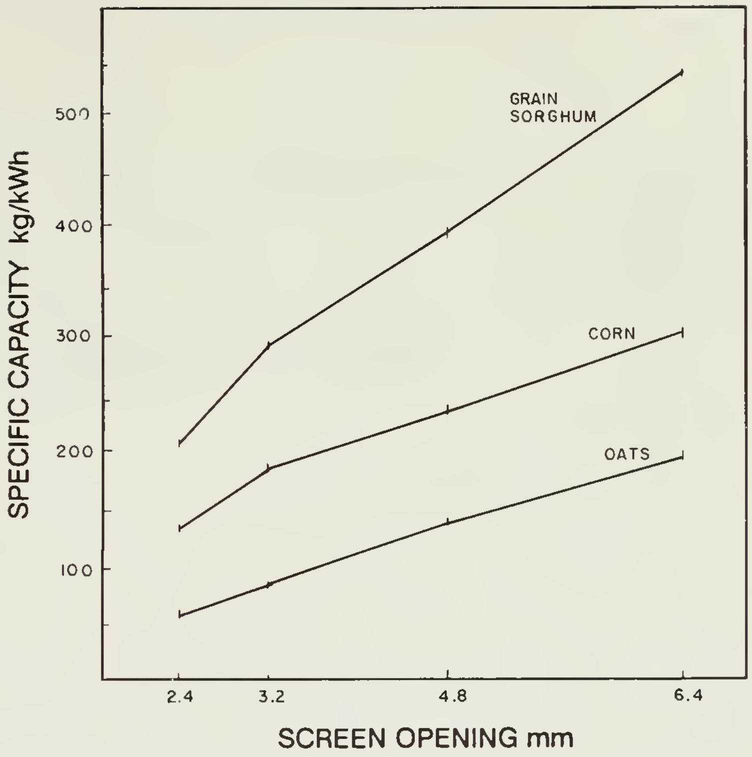

Fig. 7. Effect of the kind of grain on mill specific capacity.

2.3 *Product types* The grains used in feed manufacture fall into two general categories:

- Fibrous, nonfriable grains such as oats, refuse screenings, legumes, and forages such as alfalfa are considered hard-to-grind materials.
- Nonfibrous, friable grains such as corn, wheat, barley, milo, and oil cake are considered easy-to-grind materials.

Nonfibrous and friable grains are relatively easy to grind because of their fragility. At the same time, they are usually very dense. The fiber content of fibrous and nonfriable grains makes them more difficult to grind.

Mills that handle easy-to-grind grains should be equipped to convey the finished product away. Hard-to-grind grains require more energy to reduce them, so consider factors that improve the quantity of product ground per unit of input power. Fig. 7 shows the power requirements for grinding various grains: easy-to-grind corn and grain sorghum, and hard-to-grind oats.

2.4 *Screen design* Three variables influence the design of hammer mill screens:

- size of screen openings
- position of the screen
- effective screen area

The use of screens results in uniform grinding. Screens ensure uniform grinding, by generating an average particle size that is smaller than the opening diameter. Materials remain in the grinding chamber until the particles are small enough to fall through the screen. Increasing the size of the screen openings reduces the time material stays in the grinding chamber and so results in a coarser end product. However, capacity increases when the size of the screen openings increases. In Fig. 8, the capacity for a system grinding shelled corn almost doubles when the screen size changes from 2.4 mm to 6.4 mm.

The screen is positioned around the grinding chamber of most hammer mills in one of two ways. The most popular arrangement is with the screen circling the grinding chamber almost 360°. Manufacturers claim the greater screen area provided by this design reduces the quantity of material rotating inside the screen and permits properly sized particles to drop out more quickly. This arrangement is suitable for processing more hard-to-grind material.

The other configuration is to place the screen across the bottom 180° of the grinding chamber. This design makes changing the screen easier. As well, it allows operators to turn the screen, exposing new sharp edges. Fig. 6 shows examples of screen locations.

Screen area affects grinding efficiency. In fact, screen area limits the ultimate capacity of a hammer mill, regardless of the input power. Some manufacturers sell a particular mill size

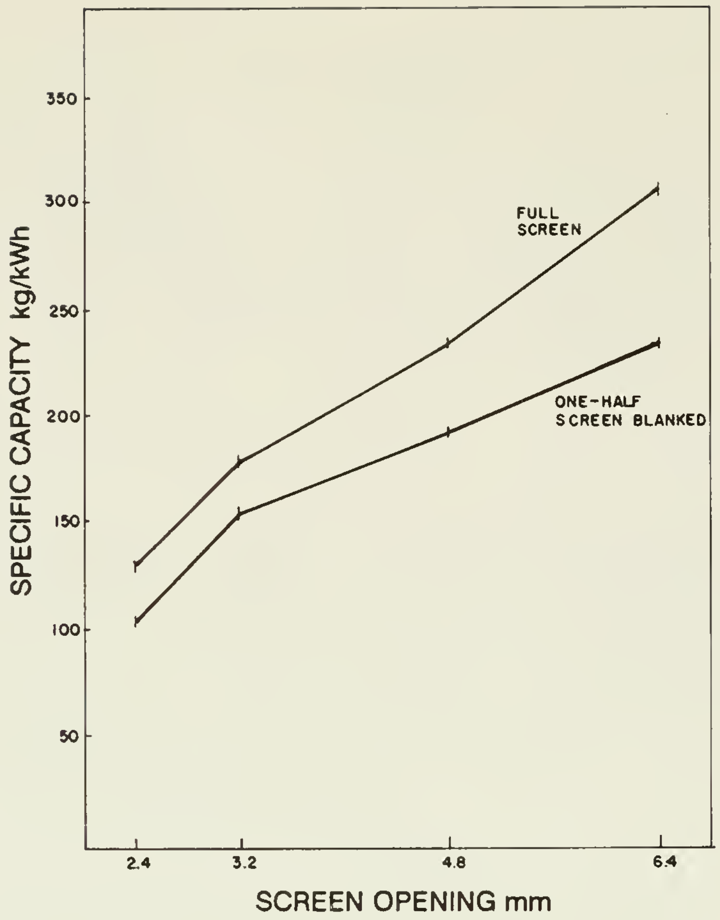

Fig. 8. Effect of screen opening size on specific capacity for mills grinding corn.

with a range of input powers. More often, though, the supplier provides various mill sizes for a given input power.

Reducing screen area while retaining constant input power decreases capacity and generates more heat and fines. Blanking off one half of the screen area reduces mill capacity, regardless of the screen size used. In Fig. 8, for example, reducing the screen area to one-half decreased production by almost 60 kg/kWh for shelled corn on a 4.8 mm screen.

The effective screen area refers to the area through which ground material can pass. Use a screen with the maximum effective screen area. The typical screen uses a staggered hole pattern. The spacing between holes, measured between respective centres, is equal to or slightly less than the hole diameter. Thicker screens tend to reduce capacity.

Some manufacturers supply specially fabricated screens with opening axes at an angle to the screen surface. This configuration provides a more direct path for the particles than do screens made with openings 90° to the direction of flow. Independent quantitative information on the benefits of such specialty screens, however, are not available.

2.5 *Hammer design* Size reduction in a hammer mill takes place at the point of impact between the product and the hammer surface. Choose the correct hammer size, style, and arrangement to ensure the desired particle size at optimum capacity. For hard-to-grind materials, the choice is even more crucial.

The most suitable number and size of hammers depends on the characteristics of the material to be reduced and the design of the hammer mill. To establish an appropriate configuration, the mill operator must consider several factors:

- the number of hammers installed
- the types of product being ground
- the respective quantities of each material for grinding

At the same time the operator should ensure the mill uses all the available screen area.

Most operators use more hammers for fine grinding. For coarser grinds in a mill of fixed rotor speed, removing some hammers generally produces a coarser end product without changing the screen size.

Experience shows that thin hammers grind most materials more efficiently than thick hammers. Thin hammers expose sharper cutting surfaces more frequently than thick hammers. On the other hand, thick hammers resist wear better than thin ones.

Fig. 9*a* shows the effect on capacity of changing the thickness of small hammers. Fig. 9*b* shows the effect on capacity of changing the thickness of larger hammers. The conclusion from these two charts is that narrow hammers grind more efficiently than do wide hammers.

For optimum grinding performance and longevity, use a thick, sharp hammer. The so-called hard-faced hammers offer this combination. These hammers are tipped with a very hard steel alloy, such as tungsten carbide, and are heat treated. The hammer has a soft centre yet an exceptionally hard outer surface. The hard steel alloy tip causes undercutting, which develops a sharp edge. Because of the soft centre, the forward surface wears in a concave shape thus producing additional sharp cutting edges. Fig. 10 compares the wear patterns of hard-faced hammers with standard hammers.

The 6.35-mm hard-faced hammer is probably the most popular type used in North America. Virtually all mills can accommodate it with good results.

How the hammers are arranged affects wear of both the screen and the hammers across the rotor. Use a staggered hammer arrangement for uniform use of the whole screen; otherwise the screen wears in striations.

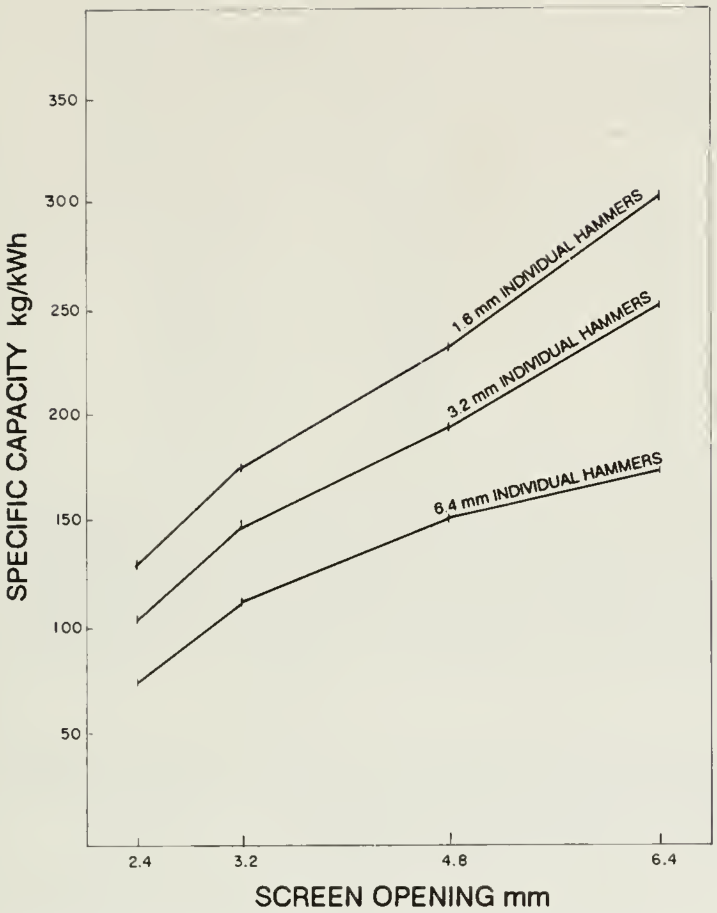

Fig. 9*a*. Effect of small hammer size on mill specific capacity.

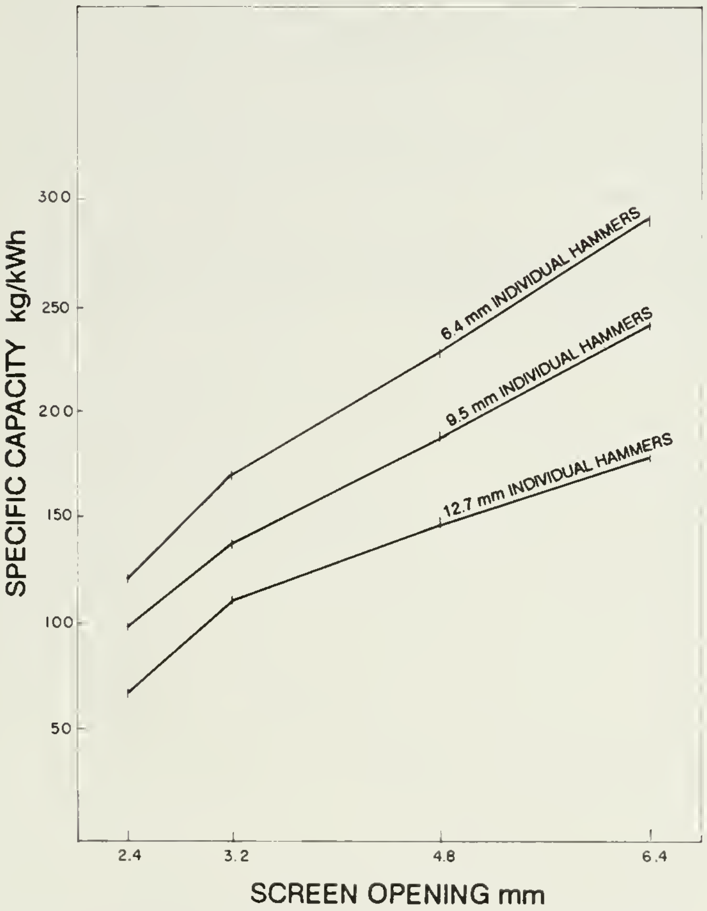

Fig. 9*b*. Effect of large hammer size on mill specific capacity.

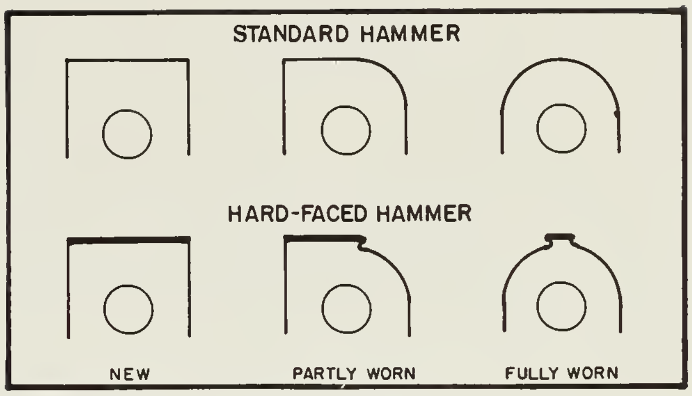

COMPARISON OF WEAR PATTERNS

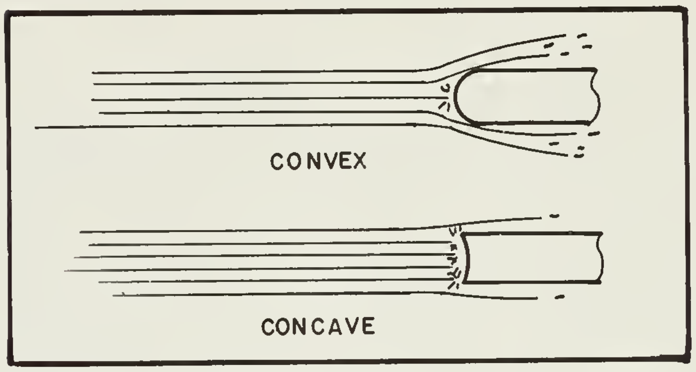

COMPARISON OF EFFECTIVENESS OF CONVEX AND CONCAVE CUTTING SURFACES.

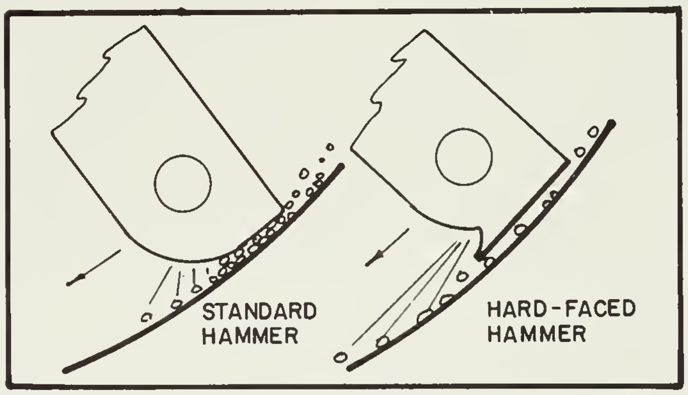

Fig. 10. Comparison of standard and hard-faced hammers.

As well, arrange the hammers so excess material does not collect in a single area of the rotor. Often the hammer pattern directs more product to the outer portion of the rotor causing faster wear on the outside hammers.

The hammer-to-screen (H/S) clearance also affects hammer mill performance. A small H/S clearance causes material rotating against the screen in the grinding chamber to move quickly. Dragging the hammers through the layer of material causes more impact on the particles, more fines, and faster wear on the hammers and screen. Increasing H/S clearance draws the hammers out of the moving particle layer, reducing its velocity and thereby allowing quicker exit from the grinding chamber. This arrangement produces fewer fines and controls hammer and screen wear.

Experience indicates that reducing the full complement of hammers by 25% increases efficiency up to 10% on some mills. Combining this improvement with an increase in H/S clearance significantly improves efficiency for the mill (Fig. 11), provided coarse grinding is acceptable. However, these actions do not suit every situation. Rely on trial runs before the mill goes into full operation to set the conditions for optimum results.

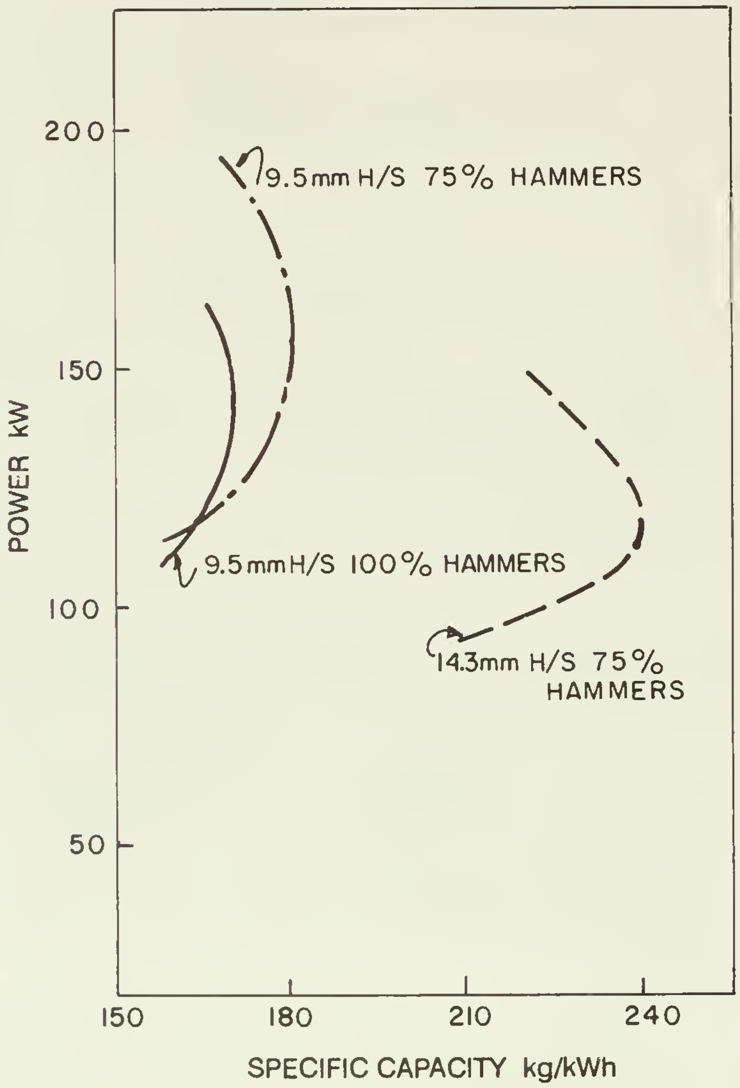

Fig. 11. Effect of hammer-screen clearance and number of hammers on mill performance. Source: Koppers Co., Inc.

2.6 *Speed of rotation* Hammer mills used in North America are classified as either high speed (3600 r/min) or low speed (1800 r/min), based on the speed of the rotor. High-speed mills generally use a small-diameter rotor; low-speed mills use a large-diameter rotor.

The speed of the hammer tips is approximately equal for various manufacturers and for different rotor speeds. It is the velocity of the hammer tips which determines the effectiveness of the mill. Table 4 lists typical hammer rotor diameters and operating speeds.

Table 4 Hammer mill operating speeds

	Rotor diameter (mm)	Tip speed	
		(r/min)	(m/min)
A	460	3600	5180
B	530	3600	6040
C	610	3600	6890
D	760	1800	4300
E	910	1800	5180
F	1070	1800	6040
G	1220	1800	6890

Note: Although mills *C* and *G* operate with similar hammer tip speeds, they will not necessarily produce similar results. Because the housing curvature is much greater for mill *C*, high centrifugal forces direct product outwards against the screen thus improving grinding efficiency. Centrifugal force would be considerably less in mill *G*.

Most mills operate with direct-drive, flexible couplings that fix the operating speed. If a belt drive is used, the actual rotor speed can be adjusted to meet optimum conditions, but high-power belt drives are expensive and bulky.

Choose high-speed mills with smaller diameter rotors for fine or hard-to-grind materials. For fine grinding on screens with openings less than 3.2 mm, use a high-speed rotor for greater capacity. Low-speed operation is clearly superior for coarse grinding. At high tip speeds material moves around the mill parallel to the screen surface, making the openings only partially effective. At slower speeds material impinges on the screen at a greater angle causing greater amounts of coarser feed to pass through.

Fig. 12 shows the effect on capacity of changing the speed of a single-hammer mill reducing shelled corn.

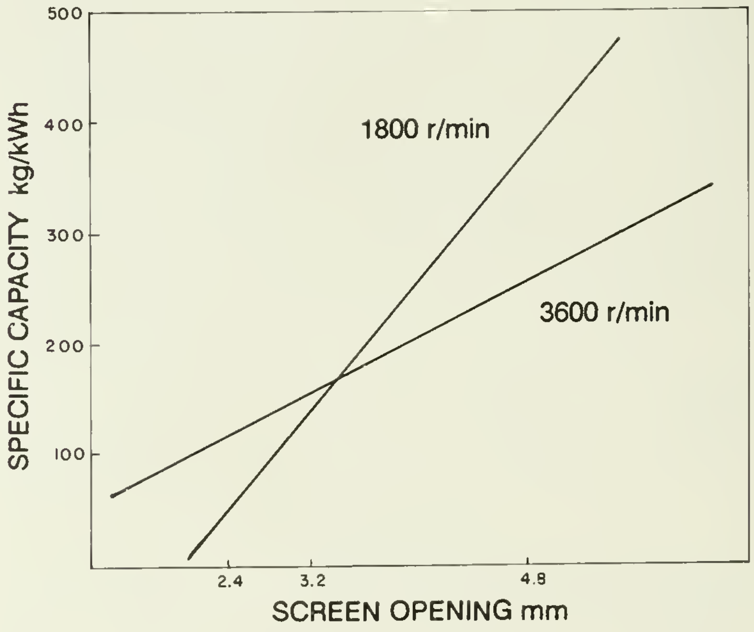

Fig. 12. Effect of rotor speed on the specific capacity of a mill grinding shelled corn. Source: Canadian Feed Manufacturers Technology.

2.7 *Air in the grinding process* For most hammer mills air flowing through the screen improves operations. Rotating hammers act as a fan and build up air pressure against the screen. Consequently air, dust, and some material blows through the screen.

Ensure that air flows through the screen to:

- prevent the screen from blinding
- prevent heat buildup
- increase capacity
- provide dust control

A lack of airflow through the mill allows moisture to accumulate as it is released from the grain during grinding. Accumulating moisture causes the ground material to clump and block the screen. Good airflow through the mill dissipates accumulating moisture, and prevents clogging.

When screen openings are smaller than 2.75 mm, good airflow is particularly beneficial. Clogging often occurs on these screens because of the fine grind of the material they handle.

During cold weather, moisture further aggravates the problem of screen blocking, especially when temperatures drop below freezing.

Good airflow through the mill reduces the temperature rise that occurs during grinding. Fig. 13 compares the temperature rise in grinding shelled corn through a 2.4-mm screen in mills with and without airflow. When air flows through the mill, the temperature rises 2.4°C. In contrast, the temperature rises 9°C when no air flows.

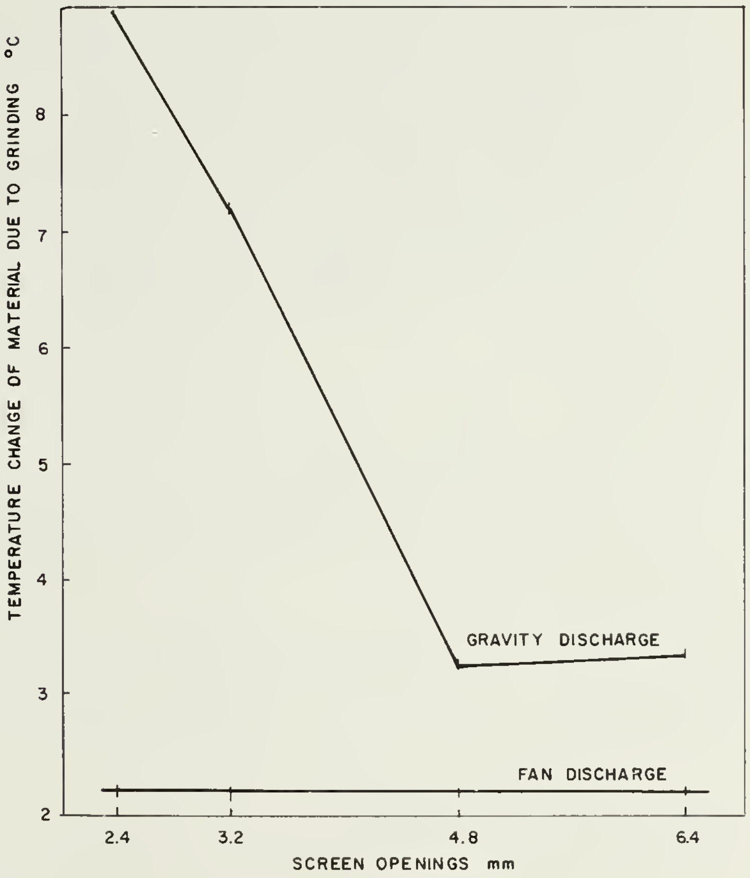

Fig. 13. Effect on gravity discharge and fan discharge of temperature increase due to grinding.
Source: Canadian Feed Manufacturers Technology.

Increasing airflow also allows the mill to approach its maximum grinding capacity, especially on hard-to-grind grains such as alfalfa and oats. Fig. 14 illustrates an example of grinding with and without air. The additional airflow increases the grinding capacity by 10–15% in this case.

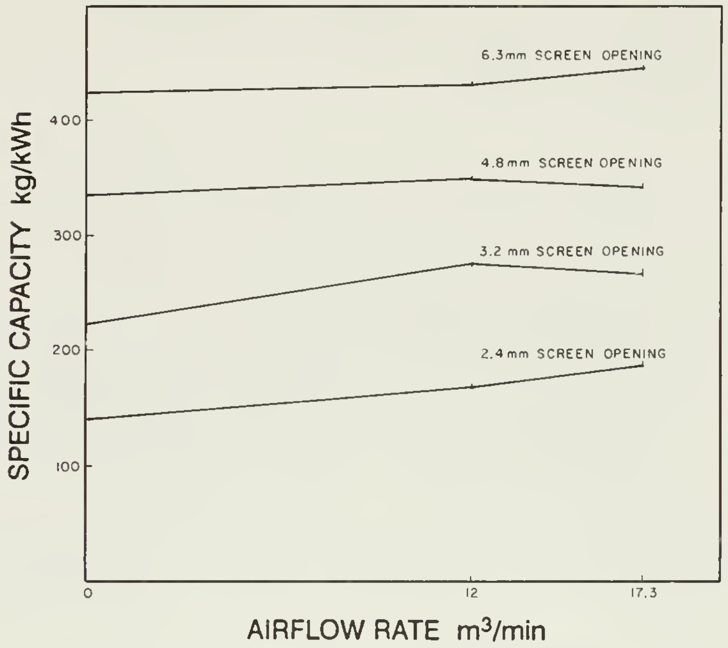

Fig. 14. Specific capacity vs. air flow rate.
Source: Canadian Feed Manufacturers Technology.

The amount of air required for optimum mill performance and economy is difficult to establish. Hammer mill manufacturers rely on this rule of thumb: 200–400 L of air per minute per kilowatt of grinding power.

2.8 *Moisture content* Moisture content of material entering a hammer mill significantly affects the mill's throughput capacity. A slight rise in moisture content causes a large decrease in specific throughput. The meal produced from grain with higher moisture content is slightly coarser than meal produced from grain with a lower moisture content. Moisture that is released during milling can condense in bins or conveying systems and impede flow. Sufficient airflow through the mill normally overcomes any difficulties caused by moisture release.

Table 5 shows the relationship between power requirements and moisture content for two conventional mills. Mill *A* is a medium-powered mill; mill *B* is much larger. To retain a constant throughput, mill *A* required 59% more power to handle material with 6% more moisture than previously. Similarly, mill *B* required 34% more power to handle 7% more moisture.

Table 5 Relationship between power requirements and moisture content for two conventional hammer mills

Mill	Moisture content				
	12%	13%	15%	17%	19%
	Power requirement (kW)				
A	–	7.4	10.1	11.6	11.0
B	24.4	–	28.0	30.6	33.6

Note: Both mills are processing barley. The output of mill *A* is 279 kg/h. The output of mill *B* is 1092 kg/h.
Source: Thomas (1958).

Fig. 15 compares the efficiency of grinding corn at a normal moisture content with grinding corn at a high moisture content. In this example, the mill uses a 3.2-mm screen. The mill grinds about 46 kg/kWh less corn when the grain enters the mill at a high-moisture content than it does with corn at normal moisture levels. When grinding wheat, a similar pattern emerges (Table 6).

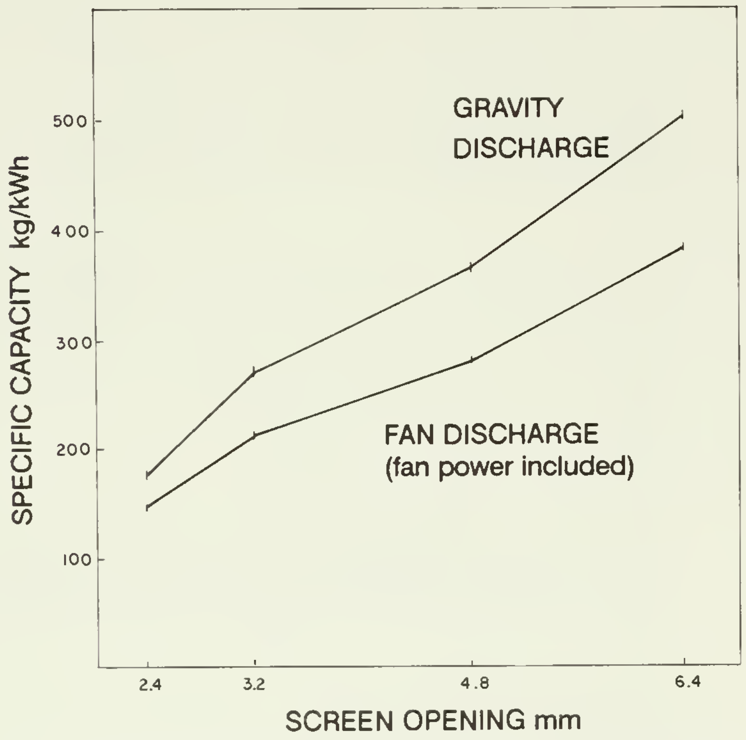

Fig. 15. Effect on gravity discharge and fan discharge of moisture content of the grain for a mill grinding corn. Source: Canadian Feed Manufacturers Technology.

2.9 *Method of feeding* Hammer mills are loaded by force feeding or gravity feeding. Both methods aim to load the mill fully and to deliver grain at a uniform rate.

Always control the rate of loading. Never overfeed a mill. A hammer mill is fully loaded when the ammeter indicates the motor is drawing its rated amperage.

Table 6 Relationship between mill output and moisture content for wheat in a mill using a 3-mm screen

Moisture content (%)	Specific output (kg/kWh)
13	66.0
15	56.6
17	48.7
19	40.8

Source: Summerfield (1984).

Most commonly, material enters a hammer mill through a manually operated slide gate on the feed spout. This system works best if the material flows freely and contains no foreign material such as straw. Otherwise the feed rate is erratic and the feed spout plugs. To correct these problems operators often set the feed rate very slow, but the mill then becomes underutilized.

To match feed rate to mill capability most accurately, use a feeder mechanism that delivers a predetermined amount of material. The feeder should be as wide as the mill inlet so that the grain is uniformly distributed across the grinding area. With this mechanism the operator can set the intake rate for constant full load without concern for surging, which causes plugging.

Feeder mechanisms are either driven off the mill motor through a variable-speed transmission or from a separate, variable-speed motor drive. The second option allows the feeder to interlock with the mill motor. In this configuration, feeding automatically stops if the mill overloads and continues only when the mill clears itself, as indicated by a reduction to a normal current reading on the ammeter.

An air syphon offers additional benefits to feeders. The syphon removes heavy, nonmetallic foreign objects from the material to be ground. These objects can damage the hammers and screen if they pass into the grinding chamber.

To keep metal from entering the grinding chamber, expose all material entering the hammer mill to a magnet before it reaches the grinding area. Install a baffle upstream of the magnet to slow the material flow enough that the magnet captures all ferrous material. Clean the magnet regularly to maintain adequate performance. A magnet loaded with metal loses its effectiveness. Any metal that enters the grinding chamber causes damage and premature wear to the mill. It can also restrict intake.

2.10 *Conveying finished product* Hammer mill installations are characterized by either gravity discharge or pneumatic discharge. Gravity-discharge systems operate independently from the grinding function; pneumatic discharge can affect grinding. The two discharge methods can be further subdivided as follows:

- gravity discharge into a bin
- pneumatic gravity discharge
- mechanical gravity discharge
- pneumatic discharge with a directly connected fan
- pneumatic discharge with a separate, motor-driven fan

Avoid a system that relies on gravity to discharge the hot product directly into a bin. This discharge method creates a continual fire hazard; conveying the finished product allows time for any hot parts to cool. Discharging directly into the bin also necessitates placing the grinder on the upper floors. Monitoring then becomes difficult, and the bins for raw material have to be installed at even higher levels, resulting in an extremely tall configuration. Moreover, because gravity discharge allows air to enter at the mill inlet, dust collected with this arrangement can reenter the process downstream of the mill.

Alternatives to directly discharging material into a bin include:

- discharging into a pneumatic conveying system using positive pressure and a rotary air lock feeder
- discharging into a pneumatic conveying system using a negative pressure line with an open air intake
- discharging into a mechanical conveying system

Pneumatic conveying consumes about four times more power than does mechanical conveying with a screw or drag conveyor and a bucket elevator. The extra power needed to operate the pneumatic system may reach one-third of the total power consumed in grinding. Fig. 16 compares the specific capacity of a gravity discharge mill with that of a pneumatic discharge mill.

All types of pneumatic discharge and conveying systems require dust collectors to separate the ground material from the air before the material enters the bin. See Agric. Can. Publ. 1832/E *Air and Pneumatic Conveyors* for more information on pneumatic conveying.

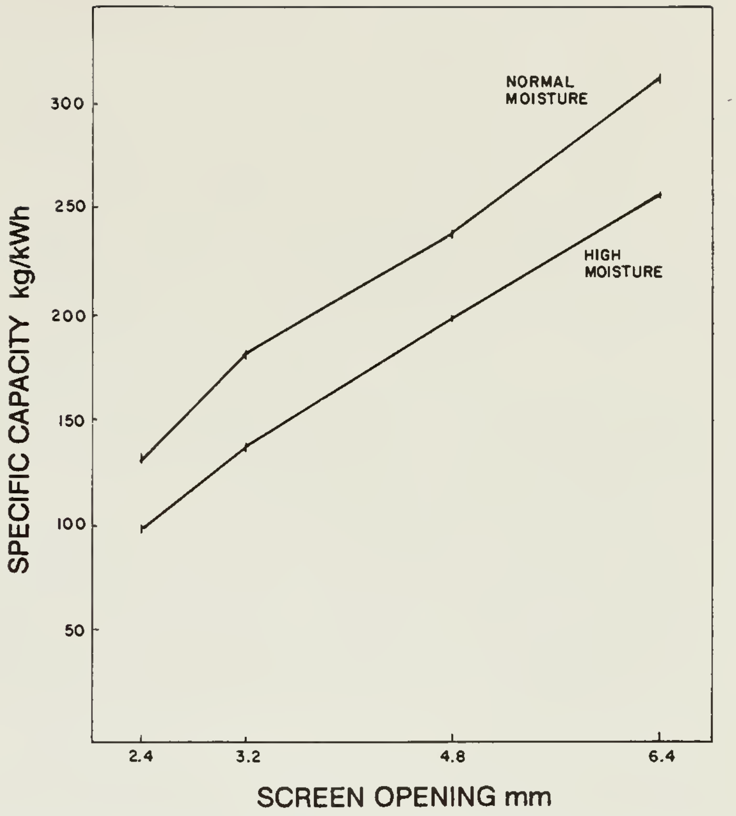

Fig. 16. Specific capacity for fan and gravity discharge. Source: Canadian Feed Manufacturers Technology.

In hammer mills, at least 50% of the air required for conveying passes directly through the mill with the material.

Fine grinding and grinding forages or hard-to-grind grains require airflow through the screen to prevent clogging. Pneumatic discharge best accommodates the two functions of conveying and increasing grinding capability. As well, choose suction pneumatic discharge for fine grinding below 2.8 mm. Either gravity or pneumatic discharge can work effectively on easy-to-grind and coarse materials.

The plant layout and the type of grinding to be done generally determines the form of discharge and the selection of conveying system.

Fig. 17 illustrates three methods for discharging and conveying material from hammer mills:

- pneumatic discharge
- gravity discharge with mechanical conveying
- gravity discharge with pneumatic conveying

2.11 *Dust control* Grinding produces a great deal of dust. Recovering the dust is important for several reasons:

- to maintain good health
- to observe air pollution regulations
- to recover a valuable product

Consider a grinding operation that produces 2000 t of finished product per year. If 5% of the material is lost in dust, the annual production loss is 100 t of feed.

Any decision not to install a dust control and recovery system in a hammer mill warrants careful economic evaluation.

2.12 *Installation, maintenance, and safety* Install hammer mills on a level structure or floor. Use machinery-mounting pads made from rubber or neoprene compounds to isolate the mill from the surrounding structure. This arrangement extends bearing life and reduces noise transmission. Use soft rubber or silicone seals at the connection points in transitions to and from the mill. These seals (Fig. 18) help keep welds from breaking or metal from cracking as a result of mill vibration.

For safety, incorporate an automatic shutoff switch on the mill doors. A micro-switch senses door position and prevents the mill from starting if one of the doors is not properly closed or stops the mill if a door opens while it is running.

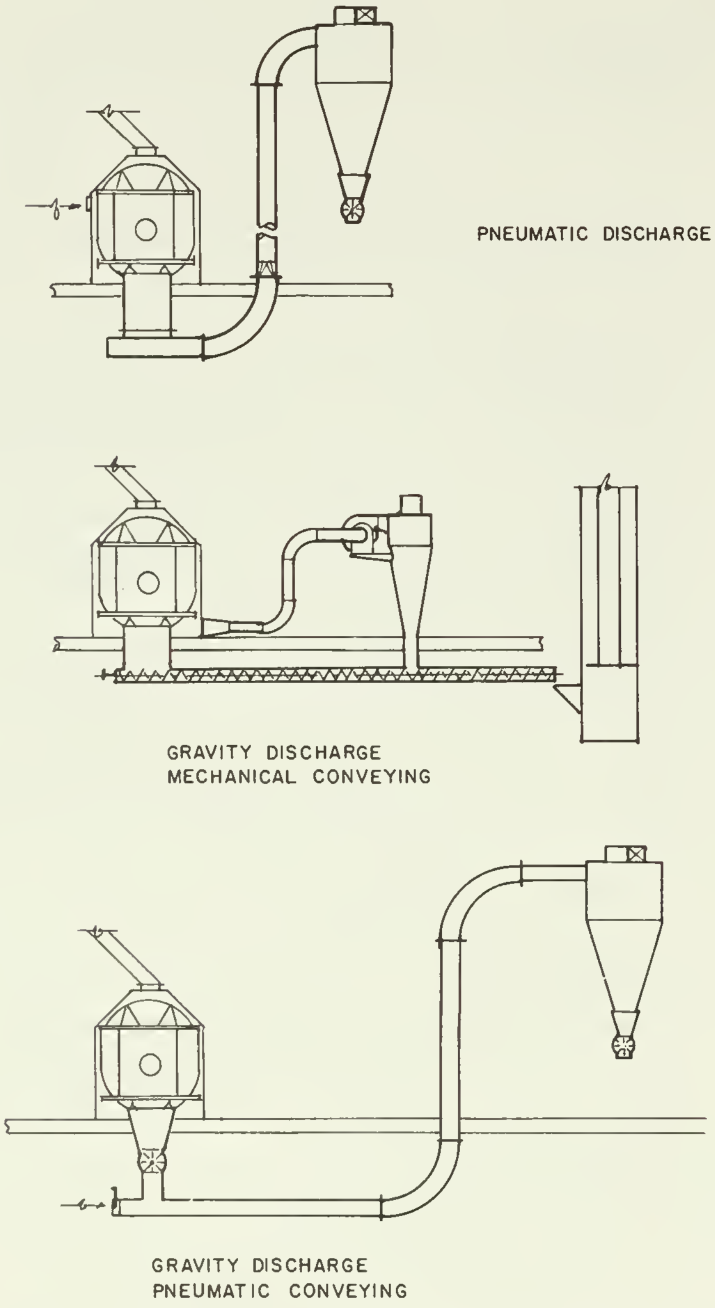

Fig. 17. Hammer mill discharge and material-conveying methods.

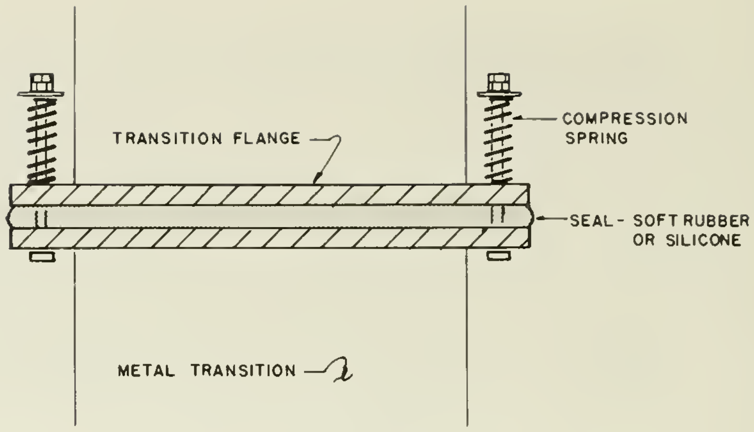

Fig. 18. Transition connection detail.

Also provide mills that run unattended for any length of time with a vibration sensor switch. This switch automatically breaks the power circuit if excessive vibration occurs. An ammeter that interlocks to the magnetic starter and shuts down automatically in case of overload is also recommended. Include in this circuit a warning device to indicate danger. Locate thermistors in the motor winding to stop the mill if any components overheat.

Hammer mill maintenance should include regular inspection of all parts susceptible to wear. Pay careful attention to lubrication requirements.

Most mills have many internal wear plates that direct the flow of material or hold various components in place. Check directional feed gates for wear and replace them when necessary. Also, many mill designs include plates to hold the screen in place inside the grinding chamber. If these plates wear excessively, the screen moves close enough to the hammers to get hit. In such a case the mill itself can be damaged.

Hammers wear quickly so change them regularly. If hammers wear unevenly, adjust the intake mechanism so the material feeds more evenly over the full width of the hammers. Replace any hammers worn on one side past centre. Don't simply reverse them. Continuing to use badly worn hammers can result in one breaking loose and causing severe damage to the mill or injury to bystanders. Check the hammers for wear and elongation of the pin holes. If the hammer moves on the pin more than 1.6 mm toward the rotor shaft, replace the hammer or pin immediately.

Rounded perforation holes characterize worn screens. Many operators judge a screen to be worn out when the motor amperage for a given flow of material increases by more than 10% over original readings.

Five conditions generally account for excessive vibration in hammer mills:

- improper hammer arrangement
- missing or broken hammers
- excessively worn hammers
- loose hammer pins
- hammers that fail to swing freely

Run the mill without any hammers installed to determine whether the problem is in the hammers or rotor. Check the rotor for excessive wear or cracks in the metal and replace it as required. Replace noisy bearings as soon as possible. Check the lubrication of overheating bearings and replace as required. Hot bearings are a prime cause of feed mill fires and explosions. Devices to detect bearing heat are worthwhile if the mill operates unsupervised.

2.13 *Selection* The major factor in selecting a hammer mill is throughput capacity in tonnes per hour. As a guide, match capacity to weekly demand. Then, identify manufacturers offering mills with the appropriate capacity, and select a mill according to durability and availability of special features such as ease of screen change or ease of servicing and changing hammers. If the fundamentals of hammer mill operation are correctly applied, almost any make of mill does an effective job.

2.14 Roller mills

Roller mills are precision machines that reduce the size of feed particles. They provide finely controlled grinding with fewer fines than any other type of size-reduction equipment. Rather than completely breaking down the kernel, as in a hammer mill, roller mills merely cut open the hull (endosperm) to expose the internal portions of the grain. Roller mills can be used to process virtually any grain type.

The terms cracking, granulating, crimping, and flaking commonly describe the actions of roller mills. Cracking, granulating, and grinding refer to reduction of particle size. Flaking and crimping refer to the flattening of particles. Flaked particles are thinner than crimped particles, and the feed must spend considerable time in a steam chest to soften the kernels before they are rolled. Roller mill action on incoming grain ranges from mild to harsh treatment, yielding material 4 to 140 mesh size (Table 1).

Roller mills are characterized by their low power requirements and their unique action on the grain.

2.15 *Design and operation* Roller mills consist of one or more pairs of rolls arranged in parallel. Additional pairs of rolls, for flaking or for increasing the capacity of the mill, stack on top of the primary pair. Each roll pair is always of equal diameter. The smallest rolls available are 150 mm in diameter and 150 mm long. The largest are 710 mm in diameter and 1320 mm long.

The rolling mill frame should allow the rolls to be easily removed for regrooving. However, on most mills, roll removal is laborious. So if the operation requires more than one type of roll, consider installing two mills.

Of the pairs of rolls, one roll mounts rigidly whereas the second adjusts to vary the degree of reduction or flattening and to compensate for gradual reduction in roll diameter caused by regrooving. A spring-release mechanism generally equips the adjustably mounted roll. This setup reduces damage to the rolls from stones or bits of metal that may accidentally enter the mill.

A feeder distributes material uniformly across the width of the rollers. Scrapers prevent buildup of material on the rolls when processing high-moisture grain or during steam rolling.

Fig. 19 shows a schematic view of the internal parts of a typical roller mill. Fig. 20 shows a side view of an industrial style mill.

2.16 *Operating characteristics* For a given material, these factors in particular affect the mill's operating characteristics:

- roll types
- roll grooving
- roll spacing
- roll speed, especially the difference in speed between individual rolls

2.17 *Roll types* Because the cost of rolls represents one-third to one-half the purchase price of most roller mills, match the quality of the rolls to their intended service. Choose rolls of hardness from 45 to 55 as measured on the Rockwell C scale.

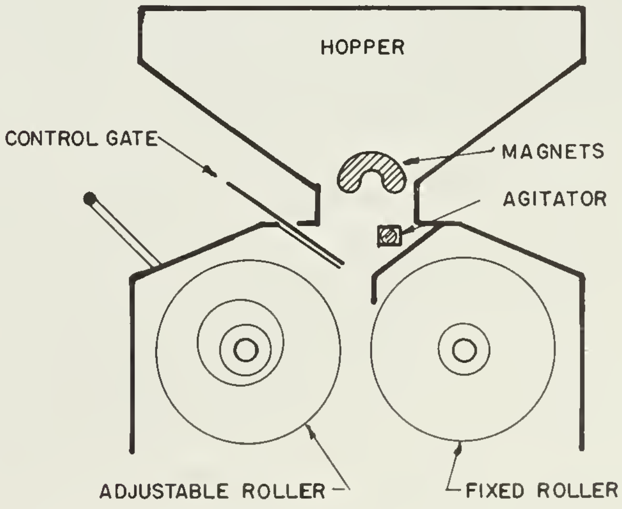

Fig. 19. Cross section of a roller mill.

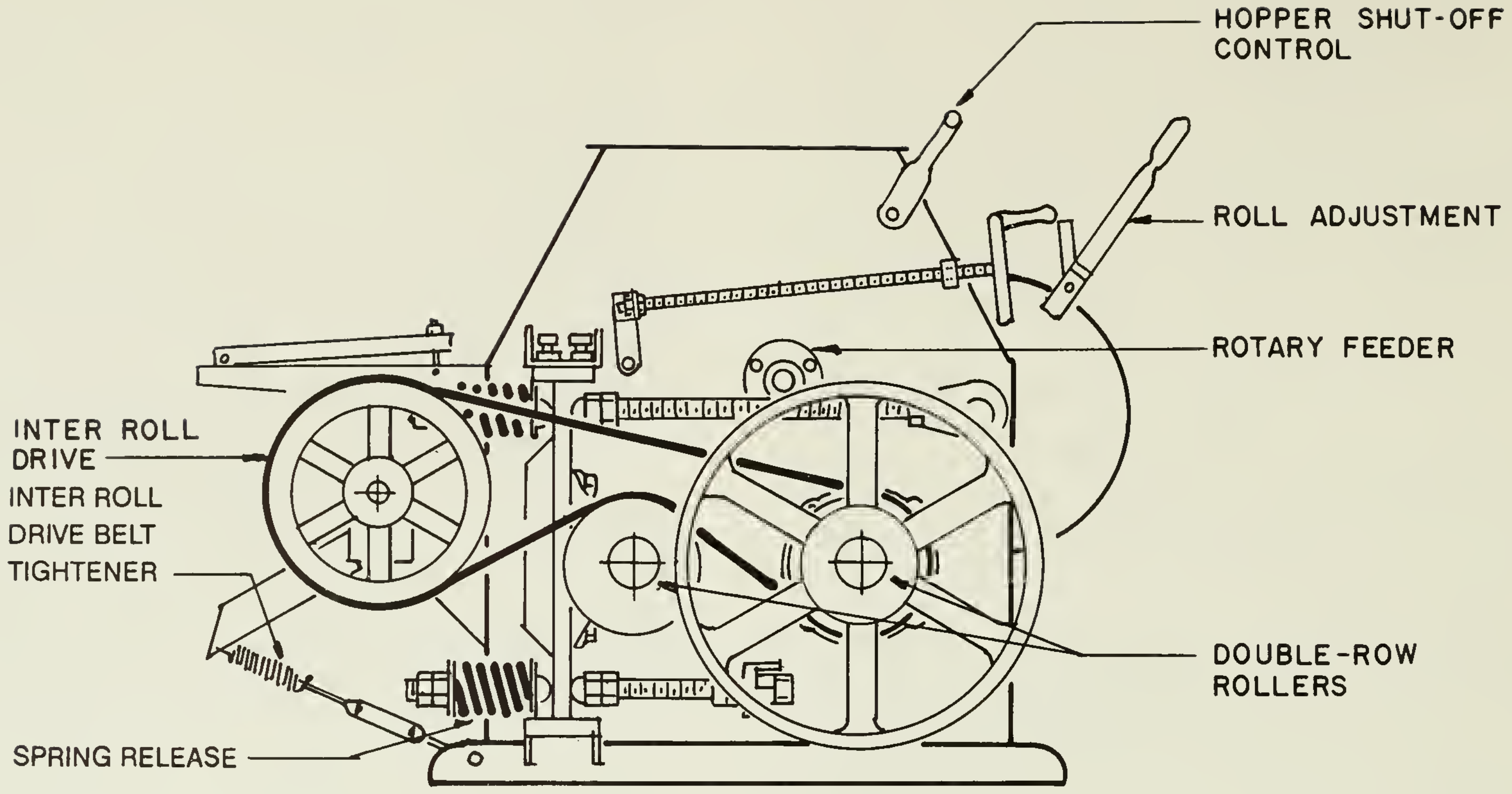

Fig. 20. Side view of an industrial roller mill. Source: Roskamp Manufacturing, Inc.

Three types of rolls are commonly used:

- hollow tube rolls, made of cast iron or steel
- alloy white-iron rolls, solid to the shaft
- chilled cast-iron rolls, either solid or partially hollow

Hollow tube rolls are intended for farm use. They are the least expensive of the three types, but they are the most susceptible to fracture from shock. Hollow rolls are generally heat treated by the case-hardening process. This treatment follows the machining of the grooves. Dimensional properties of hollow tube rolls vary substantially. Consequently, they may grind unevenly and vibrate excessively. Moreover, the ability of hollow rolls to be regrooved is limited.

Alloy white-iron rolls are cast solid around the shaft, so they are hard to the core. These rolls are machined and grooved in the hardened state with special carbide tools. This type of roll can withstand regrooving up to 15 times. The exact number of regroovings depends on the wear of grooves and their size, and on how much the roll diameter can be reduced without sacrificing grinding quality. With solid-cast rolls, material grinds more evenly and the mill operates with less vibration and bouncing.

Chilled cast-iron rolls are the highest-quality rolls and the most expensive. This hardening process is most often used on rolls 300 mm in diameter and larger. The rolls are hardened about 16 mm deep and can be regrooved up to 10 times.

A good-quality, solid pair of rolls should process from 15 000 to 18 000 t of grain before regrooving is necessary. When rolls dull, power consumption increases and the grind quality decreases. Always regroove rolls as a pair.

2.18 *Roll grooving* The type of roll grooving determines the characteristics of the rolled product. Coarser grooving produces more cutting and chopping. Finer grooving gives a flatter material. The cutting and chopping action of coarse rolling requires less power than fine milling because less actual work is done to the kernel. As rolls wear, grooves become less effective; thus more flaking results and mill capacity decreases. Table 7 relates capacities to roll grooving, roll size, and power requirements.

The number of grooves per 25.4 mm of circumference (grooves per inch) characterize rolls. Rolls are available with 4.5–30 grooves per 25.4 mm. Some large-diameter rolls (300 mm) operate without any grooves. The more grooves, the larger the diameter of the roll required to allow the grain to pass through the rollers under a given pressure.

For rolling grain of less than 15% moisture (dry rolling), use rolls with 4.5–6 grooves per 25.4 mm to crack grain coarsely for cattle and poultry feed. For cracking sorghum, use rolls with 10–13 grooves per 25.4 mm. Rolls with 13–18 grooves per 25.4 mm crimp barley, oats, and wheat. For steam rolling corn, use rolls with 16 grooves per 25.4 mm. Rolls with 18–22 grooves per 25.4 mm suit steam rolling of other grains.

Table 7 Capacity of a roller mill as a function of roll grooving, roll size, and power requirements

Roll size (in.)	Grooving per 25.4 mm	Power (kW)	Capacity (t/h) Corn	Capacity (t/h) Oats, wheat, or barley
		Dry rolling (coarse product)		
9 × 30	5.5	15	27	–
9 × 30	11	15	18	6
9 × 30	15	15	13	4
12 × 30	16	18.6	14	5
16 × 30	18	22.4	22	6
		Steam rolling (thin flake)		
12 × 30	18	18.6	2	4
16 × 30	18	30	4	5
16 × 36	18	37.3	5	7
18 × 36	18	45	7	9

Source: Larson (1978*b*).

For processing both corn and small grains, the most popular configuration is the two-pair roller mill (Fig. 21). This configuration consists of a top bank of rolls with 5 grooves per 25.4 mm and a bottom bank with 14 or 15 grooves per 25.4 mm. It yields good results with most types of grain. A single-pair roller mill equipped with rolls having 18 grooves per 25.4 mm offers an alternative multipurpose setup.

A subtle refinement on the basic longitudinal groove pattern is to introduce a slight spiral to the roll, 12–25 mm from end to end. This change smooths mill operation by providing a scissoring action. Another roll pattern features one roll with longitudinal grooves and the other with circumferential grooves (Fig. 22). This arrangement dices material.

Other rolls are available with only 2–4 grooves per 25.4 mm. These grooves are cut only 1.5 mm deep and produce noncorrugated flakes. Yet the rolls still grab the material passing through the mill.

Most grinding service companies have established groove spacings and patterns.

2.19 *Roll spacing* It is easy to adjust roll spacing. Reducing the spacing between the rolls yields a more finely ground material and decreases output.

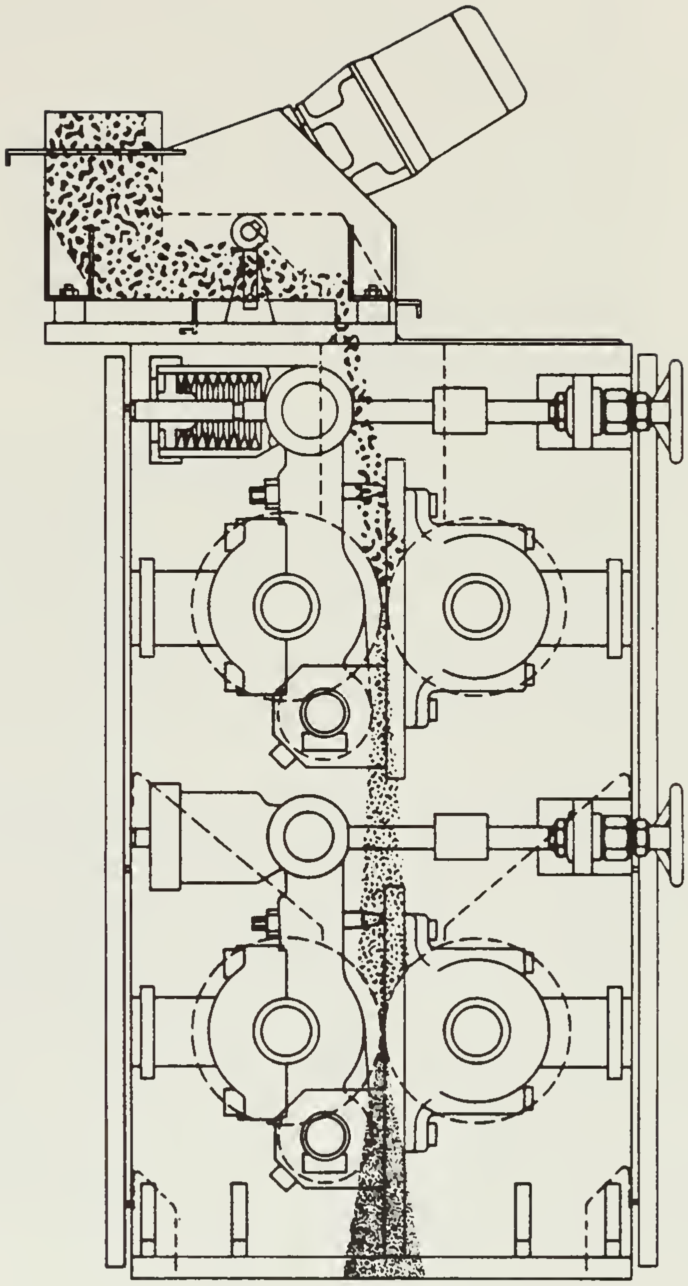

Fig. 21. Internal operation of a two-pair roller mill. Source: Gebr. Bauermeister and Co.

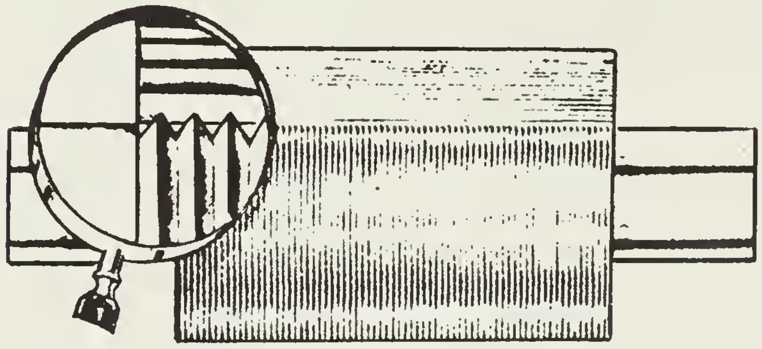

Fig. 22. Roll groove pattern for dicing. Source: Koppers Co., Inc.

2.20 *Roll speed* Rolls operating at the same speed grind by crushing the grain. A pair of rolls rotating at different speeds provide an additional shearing action. Changing the relative diameter of the drive sheaves alters speed differential of the rolls. Figs. 23–26 illustrate the effects of changing spacing and speed differential of the rolls. The data result from studies by Reece and Lott (1985) using a two-stage roller mill setup primarily for grinding corn, but also suitable for grain sorghum and wheat.

Fig. 23 shows how speed differential relates to capacity and to the spacing of the bottom roll for a two-pair roller mill. Grinding rate increases dramatically as the bottom-roll spacing increases. Grinding rate also increases as the speed differential for the top roll increases. Reducing the speed of the bottom rolls increases capacity.

Fig. 24 shows how changes in speed differential of the rolls affect particle size distribution and geometric mean diameter. Increasing speed differential caused a limited reduction in the amount of material smaller than 1200 µm. At the same time, it resulted in a limited increase in material larger than 1200 µm. Geometric mean diameter was increased from 1393 to 1583 µm.

As illustrated by Fig. 25, a large speed differential between the top rolls and between the top and bottom rolls produced the least amount of fines, or flouring. Very fine particles are generally undesirable for livestock feed.

Fig. 26 shows how increasing spacing between the bottom rolls increases the proportion of particles between 2380 and 3360 µm.

Increasing the rotational speed of the rollers increases the mill capacity at the expense of shortening the machine life and increasing the frequency of regrooving. Nonetheless, small-diameter rolls must be operated at high rotational speed since the surface velocity decreases as diameter decreases.

Operating speeds for roll diameters commonly used in Canada follow:

Roll diameter (mm)	Operating speed (m/min)
230	370
300	430
410	490
460	520
510	550
610	550

Rolls 610 mm in diameter operate at a lower rotational speed because they are not usually corrugated. The greater nip of larger rolls allows them to operate at higher speeds.

2.21 *Feeding* The feeding system for a roller mill must distribute material evenly across the rolls and prevent foreign material from entering the mill. Even distribution of material assures the mill achieves maximum capacity and uniform reduction. Because of the close tolerances between rollers, foreign material entering the mill is especially damaging.

Use either a slide gate or a feeder mechanism to control feed rate. Simplicity and low cost makes slide gates popular. However, slide gates do not guarantee constant feeding. Erratic feed rates can cause surge loads that

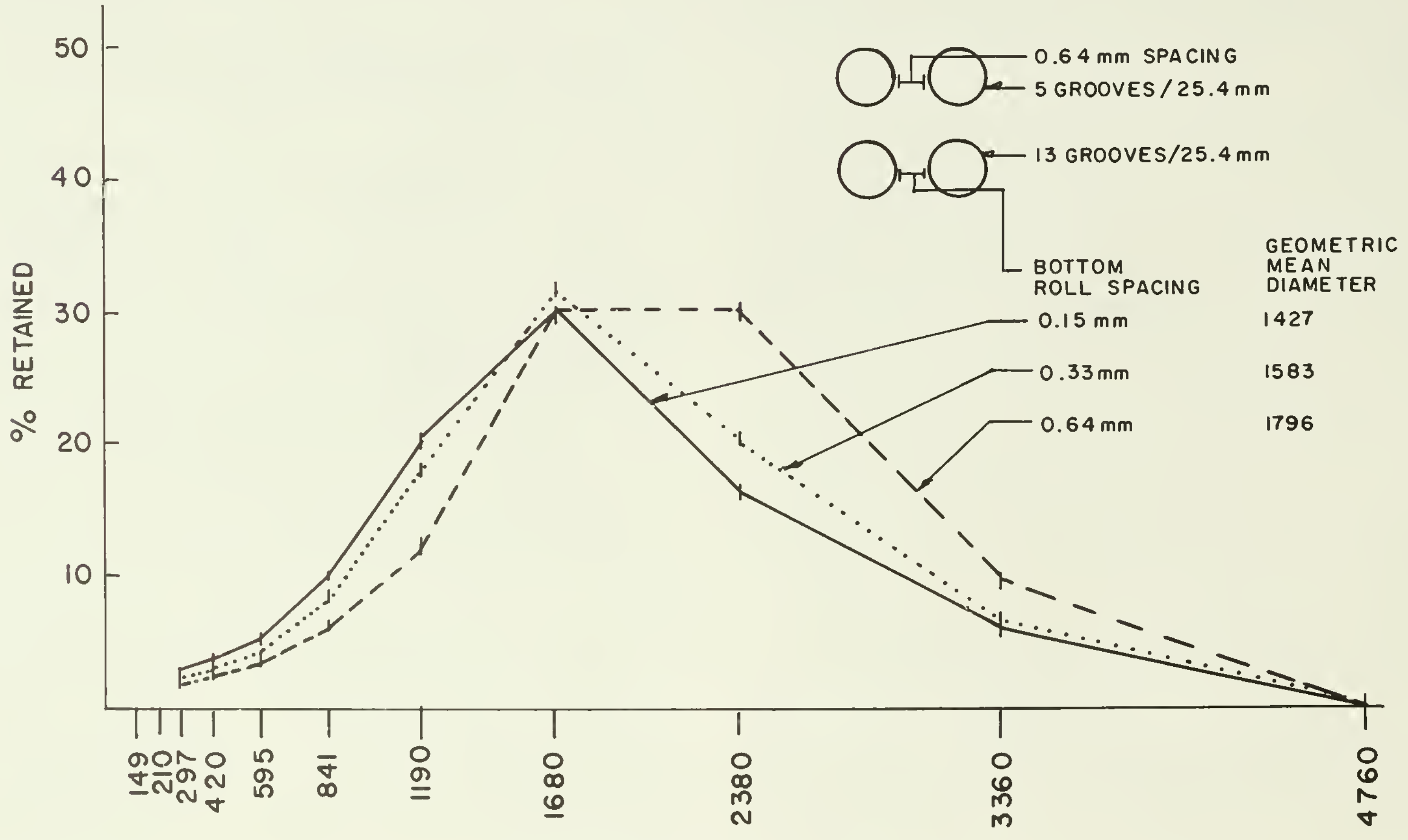

Fig. 23. Effect of bottom roll spacing and roll speed differential on corn grinding rate (Reece and Lott 1985).

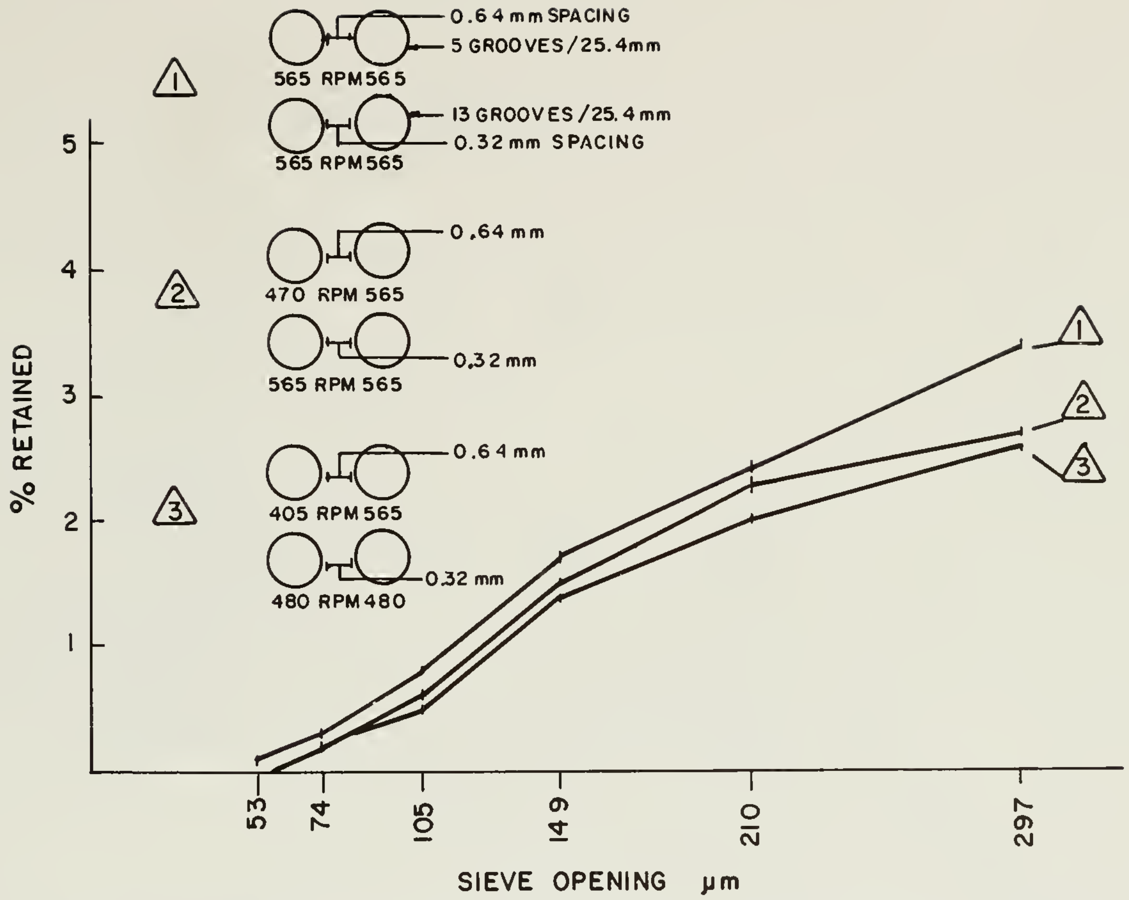

Fig. 24. Effect of roll speed differential on corn particle size distribution (Reece and Lott 1985).

plug the mill, or unnecessarily low feed rates that underutilize the mill.

A feeder mechanism, such as a rotary valve or screw feeder, allows the operator to set the feed rate for maximum capacity. A common feed distributor is the shaker type that uses an adjustable dam across a shaker shoe to spread the flow of material. An eccentric drive from one of the grinding rolls powers the distributor through a hand clutch. The two-pair machine shown in Fig. 21 has such a feed distribution device.

Fig. 27 shows a mechanism for feeding whole corn forage. In this case, a reel chopper extending the full length of the rolls performs both initial reduction and feeds the rolls. A screen determines particle size and prevents foreign materials from entering the mill.

Other common feed arrangements include a solid roll feeder regulated by a feed gate and a pin feeder useful for high-moisture material.

Roller mills are built to be quite robust. Hydraulic or spring-loaded rolls allow oversized material to pass; however, the shock of foreign materials entering the rolls can cause rollers to wear prematurely or cause shafts, bearings, and rolls to break. Keep foreign materials out of the mill.

Ideally, the first line of defence is to pass all grain coming into the mill through a scalper. The scalper protects all processing and conveying machinery from extraneous material.

Most manufacturers offer integrated single-screen shaker scalpers for dry rolling. These shakers both clean the incoming grain and act as feeders. Select a screen that allows the grain to pass through to the mill and directs the foreign material to waste. Also, provide an aspirator to help eliminate the increased dust generated by the scalper. The capacity of integrated scalpers is limited to 3–4 t/h. For greater capacity, install a separate cleaning machine.

An integrated scalper is not practical for steam rolling because of the presence of a conditioning chamber. Yet, steam rolling demands even more stringent cleaning to remove both foreign objects and dust. Fine dust combines with excess moisture from the steam chamber to form mud, which accumulates on the rolls and diminishes rolling quality. In this case, use a double-screen cleaner with aspiration to clean material before it enters the steam chamber.

As a second line of defence against foreign material, equip every roller mill with a magnet to capture tramp metal. Install spout magnets immediately upstream of the mill in a spot easily accessed for service. Additionally, install magnets in a grid in feed hoppers, in integrated scalpers, and in the feed distributor.

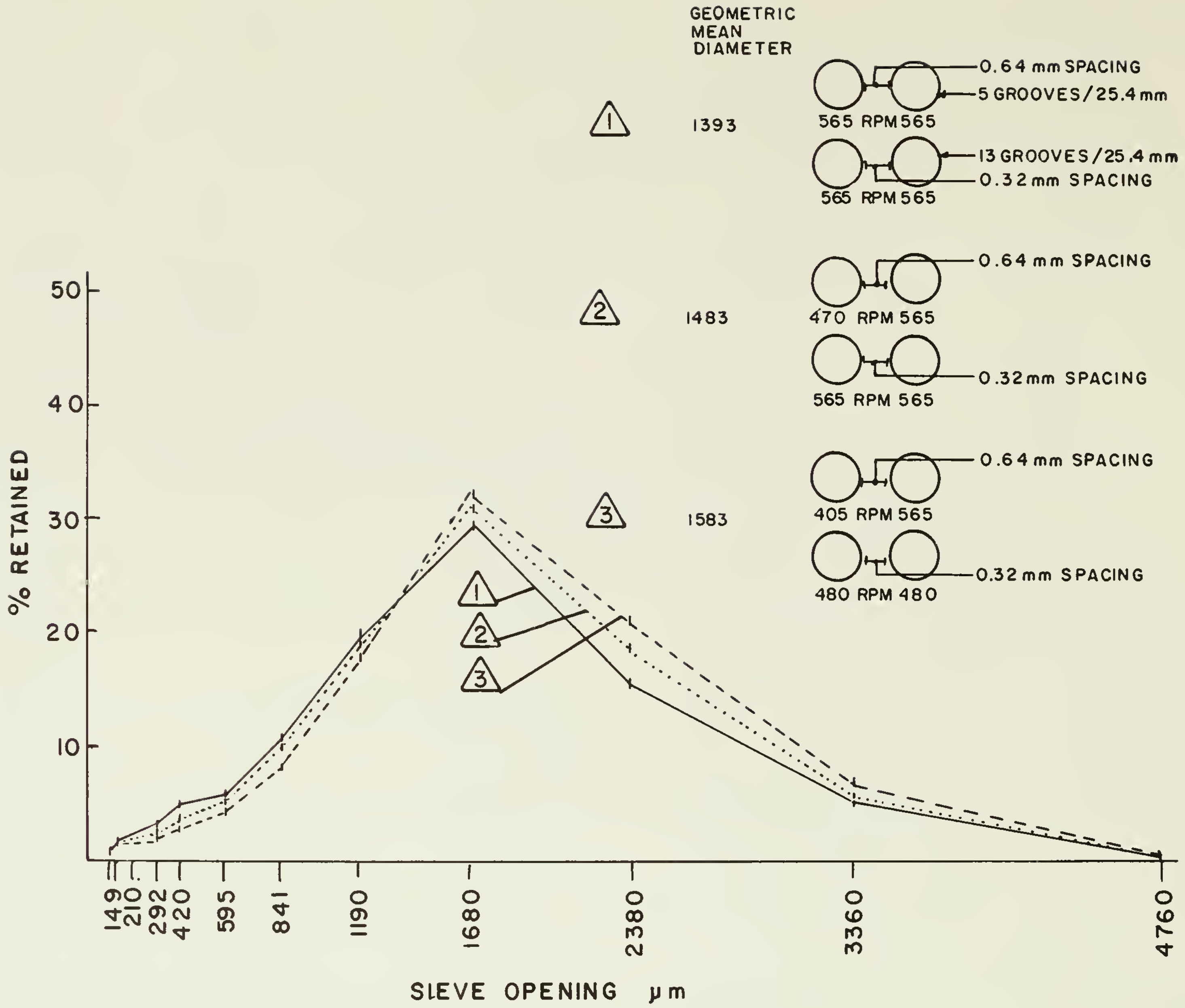

Fig. 25. Effect of roll speed differential on corn particles retained (Reece and Lott 1985).

When flaking steamed grain, the very high mill pressures used can cause bearing reactions up to 90 kN. Shock loads from stones are even more intense and potentially damaging. Hydraulic pressure rollers handle shock loads better than conventional springs; however, early failure and premature wear still occur at these high loadings.

On spring-loaded mills, use shear pins designed to shear and release the rolls when foreign objects pass through the mill. The broken pin is then easily replaced. On hydraulically loaded mills, use an accumulator to take the shock load out of the system. In this case, bearing retention cylinders unload and transmit the shock load.

2.22 *Dry rolling and crumbling* Dry rolling performs a cracking function; for corn, use rolls with 5 grooves per 25.4 mm, and for small grains, use rolls with 11–15 grooves per 25.4 mm. In general, use two-pair mills for dry rolling. Set the upper bank to crack corn and the lower bank for small grains. Corn can also be reduced to 1.6 mm in one pass in a double-reduction process.

Crumbling refers to the process of reducing pellets to 6.4 mm or smaller. Crumbling mixes feed of various sizes, primarily for poultry and swine feeding. Use roll diameters of 150 or 200 mm with lengths of 910 mm, 1220 mm, or 1520 mm. LePage grooves (Fig. 26) are normally used with 10 grooves per 25.4 mm on the saw-tooth roll and 8 grooves per 25.4 mm on the conventional roll. Because fines are undesirable, operate the rolls slowly (300–400 r/min) to maintain sharp grooves. For large reduction runs, a double-reduction mill produces fewer fines than a one-pair mill. A crumbling mill can also work well on corn and small grains.

2.23 *High-moisture rolling* Tempering refers to the process of adding moisture to grain before rolling. Water is metered onto a known amount of grain in a mixing conveyor or mixing box (Fig. 28) to bring the product to the desired moisture content. The wet grain is

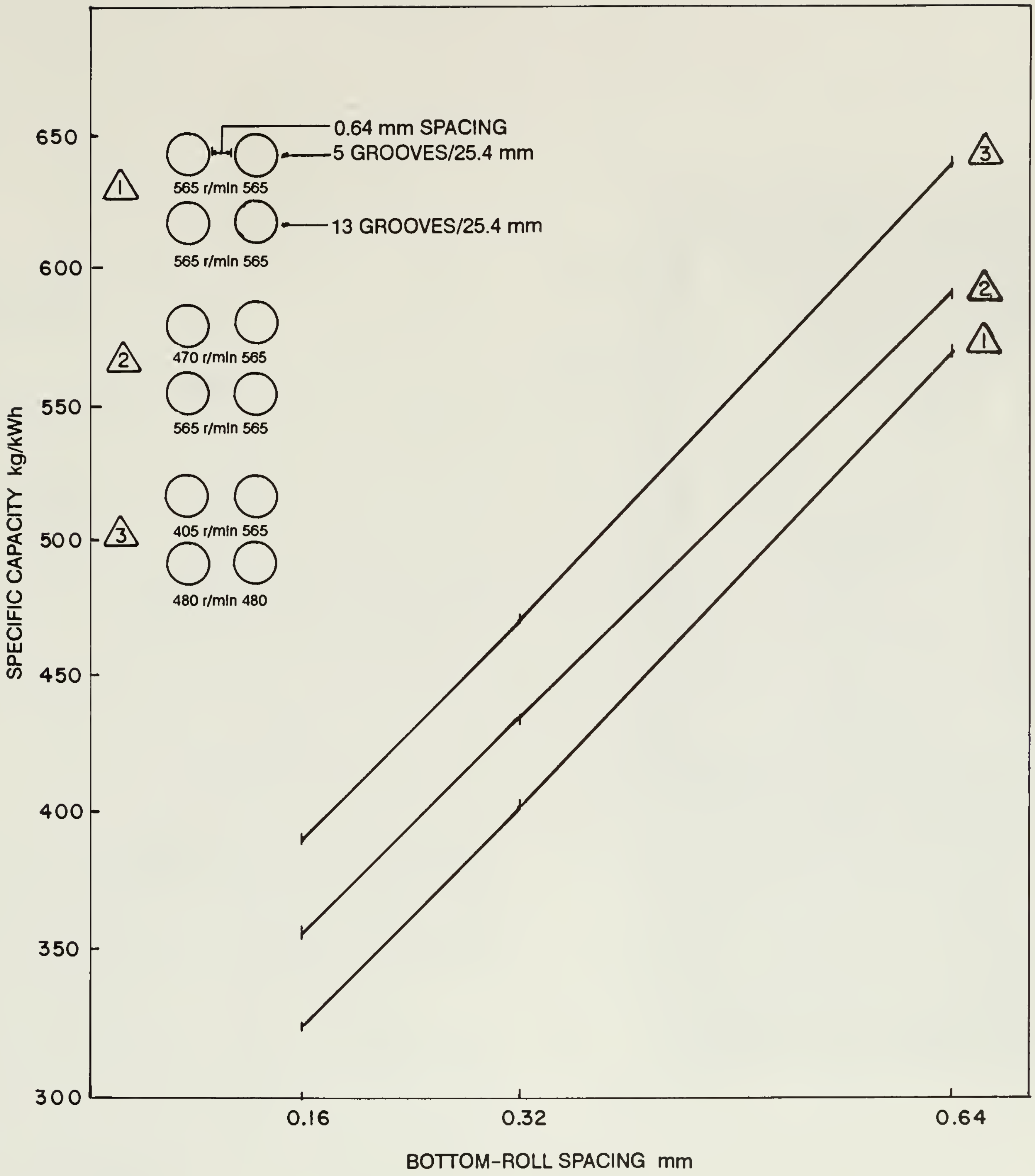

Fig. 26. Effect of bottom roll spacing on corn particle size distribution (Reece and Lott 1985).

then held in a tempering bin for 12–48 h until the water fully penetrates the kernels. Add hot water to speed the rate of absorption.

Tempered grain may attain a moisture content of 20–22% before rolling. Rolling produces a flaked feed that must be used quickly to avoid spoilage. The wetter the grain, the mushier it becomes. Moreover, a moisture content above 30% causes grain to stick to the rollers, even if the system includes scrapers.

Tempering is best used to raise the moisture content of overly dry grain before rolling. This action reduces both the energy required for rolling and the quantity of fines produced. As well, livestock find high-moisture grain more palatable and digest it more easily.

2.24 *Steam rolling* Steam rolling is the conditioning of grain with steam before rolling. A combination of steam rolling and flaking makes grain more palatable and more digestible and virtually eliminates dust. Increasing retention time in the steam chamber, increasing roll pressure, and decreasing roll spacing produces a flatter, or flakier, product.

Fig. 29 shows an industrial steam chamber mounted on a single-pair roller mill.

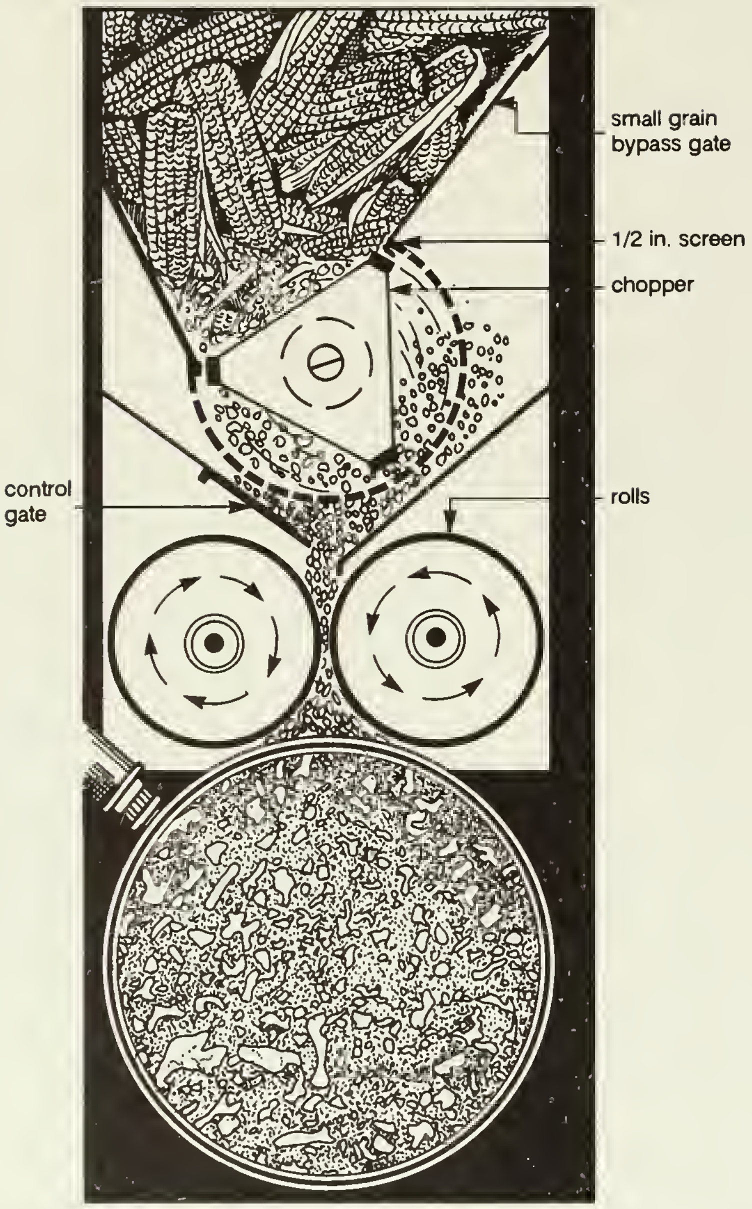

Fig. 27. Feed mechanism for whole corn.

Ensure that the steam supplied to a steam chest is without condensate. High-temperature steam, produced under high pressure, yields better distribution in the steam chamber and allows more uniform and faster absorption into the kernels. It also heats the grain before rolling.

Table 8 presents data useful for choosing an appropriate size of boiler for supplying adequate steam to a steam chamber. The figures are derived by calculating the amount of water required to increase moisture content the desired amount. For example, a steam rolling mill operating at 7.25 t/h theoretically requires 507 kg of steam to raise the moisture content 7%, or 70 kg/t. An allowance of 30–50% compensates for line losses and the escape of live steam from the steam chamber.

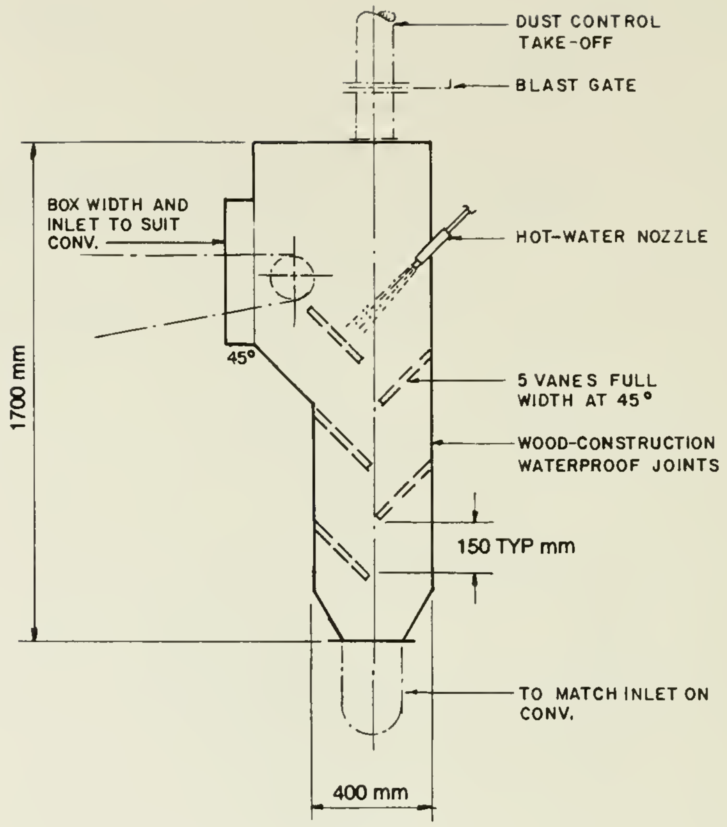

Fig. 28. Water-mixing chamber.

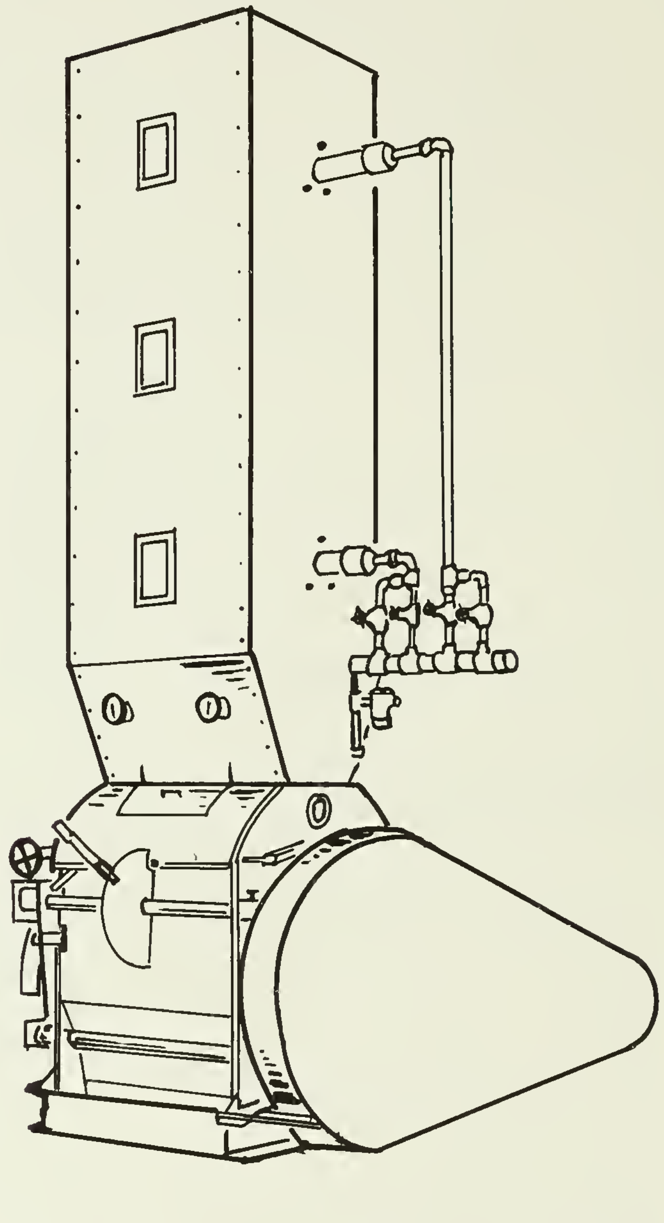

Fig. 29. Steam chest mounted on a one-pair roller mill.
Source: Roskamp Manufacturing, Inc.

Table 8 Boiler requirements for steam rolling

Grain	Steam (kg/t)	Retention time in steam atmosphere (min)
Oats	75	6–10
Barley	100	6–10
Wheat	100	6–10
Corn	150	12–20
Sorghum	150	20–30

Source: Larson (1978).

Calculate the total steam (kg/h) required from the boiler:

$$\begin{matrix}\text{steam} \\ \text{required} \\ \text{(kg/t)}\end{matrix} \times \begin{matrix}\text{mill} \\ \text{capacity} \\ \text{(t/h)}\end{matrix} \times (1.3 \text{ to } 1.5)$$

Because steam generators frequently run longer than actually necessary, estimate an overrun of 20% and add it to the required boiler power.

Then, determine the boiler power (kW) by dividing by 21:

$$\frac{\text{total steam required (kg/h)} \times 1.2}{21}$$

The steam chamber must be an appropriate size. Determine the size by calculating the volume that yields the desired retention time. If the calculations specify chambers that are unrealistically tall, increase the cross-sectional area. Suppliers' literature lists popular cross-sectional areas.

Retention times differ for steam rolling and steam flaking. Steam rolling requires a retention time up to 10 min. The retention time for steam flaking is 15–25 min. Longer retention times produce flatter flakes. Oats and barley require 15–20 min in the steam chamber for flaking; corn and milo require 20–25 min.

Because steam rolling raises the temperature of milled material, cool and dry the feed to keep it from spoiling. Use an aeration bin to supplement an undersized cooler. Add heat to supplement the sensible heat of the material to reduce adequately the moisture content.

When specifying a steam rolling operation, include a condensate drain for the steam-supply header. Without a drain, steam condensate remains in the header and causes corrosion. As well, interlock an exhaust fan with the chamber to remove excess steam.

2.25 *Conveying and storing rolled material* The main problems associated with conveying and storing rolled products are breakage and reduction of temperature and moisture. The type of rolling determines the severity of these problems.

Moving dry, rolled product poses little difficulty. Most installations use gravity discharge into a mechanical conveyor such as a screw or bucket elevator. Material may be delivered to storage, to a mixer, or directly to loadout.

Use a cooler–dryer to control moisture and breakage in steam-rolled or high-moisture grain. Load the grain into the cooler–dryer using a gravity discharge system directly from the mill. Minimize breakage with a slow-speed bucket elevator for vertical conveying or a belt conveyor for horizontal transport.

A steam-rolling operation without a cooler–dryer requires several adjustments. Most importantly, to prevent spoilage the material has to be fed shortly after rolling. Storing warm and wet rolled material causes bridging in the bin and corrosion of the bin walls. Live-bottom bins and aeration fans reduce these problems, to some extent. However, in-bin aeration cannot reduce grain temperature sufficiently to eliminate the need for a cooler–dryer.

Using a pneumatic system to convey steam-rolled material removes excess steam from the mill. This result keeps the mill clean and improves the environment. Although temperature reductions of 11°C and moisture drops of 1% are typical with pneumatic conveying, the mill still requires a cooler–dryer. However, pneumatic conveying can cause product breakage in most grains and is particularly hard on corn and sorghum.

2.26 *Installation and maintenance* Sufficient space is required for removing the rolls when they need regrooving. This factor is the most critical requirement for a roller mill installation. Nevertheless, several other installation specifications are important.

Allow at least 600 mm on the side of the machine for inspection and maintenance. Install rubber or neoprene vibration isolators, similar to those used for hammer mills. Direct the feed to the centre of the feed roll or feeding mechanism; be careful not to angle it sideways. Provide a means to remove material from the mill at least as fast as it is produced. On hydraulically operated units, mount the pump reservoir and control panel independent of the mill.

Maintaining a roller mill is relatively simple. To keep it in good operating condition, periodically lubricate all moving parts and routinely check the condition of various machine parts. Do not allow dust to build up inside or outside of the machine. Inspect rolls for wear and end-to-end adjustment. Check roll scrapers for wear and check fasteners for tightness. As well, maintain the tension of drive belts for maximum efficiency.

Before starting the motor, turn the rolls by hand to ensure that all moving parts operate freely. At the same time, remove stones from the hopper and tramp metal from the magnet.

2.27 Comparing hammer and roller mills

Compared with other mills, roller mills require less power for high capacities. Roller mills also produce feed that is more uniform, with little fine or dusty material. Unlike hammer mills, though, roller mills do not suit operations that process mixtures of grain of various sizes. Roller mills are also more susceptible to damage from foreign materials. They do not heat milled material as much as hammer mills do.

Hammer mills, on the other hand, generate more noise and require more maintenance than do roller mills.

Table 9 compares the grinding rate for hammer and roller mills. In the example, the hammer mill is a full-circle mill using four screen sizes and relying on gravity feed and discharge. The roller mill is a two-pair mill configured with three bottom roll spacings and one roll speed. Specific grinding rates for all three roll spacings exceeded those for the hammer mill with a 4.8-mm screen. And, even at the smallest roll spacing, the geometric mean diameter (GMD) with the roller mill far surpassed that of the hammer mill.

Table 9 Effect of roll spacing and screen size on grinding rate and geometric mean diameter

		Grinding rate (kg/kWh)	Geometric mean diameter (µm)
Roller mill roll spacing (mm)			
Top*	Bottom**		
0.635	0.160	391	1427
0.635	0.318	476	1583
0.635	0.635	644	1769
Hammer mill screen openings (mm)			
3.175		257	679
4.763		352	858
6.350		450	987
9.525		638	1287

* 5 grooves/25.4 mm, 405–565 r/min

** 13 grooves/25.4 mm, 485 r/min

Note: In this example, both mills are used to grind corn for broiler feed. Source: Reece and Lott (1985).

Roller mills are uniquely capable of flaking and crimping grain, using a high-moisture, high-temperature process. They produce highly digestible feed, which is less dusty than feed produced by other reduction methods.

On the other hand, fine grinding to flour-like particles is a very expensive process with roller mills; hammer mills accomplish this reduction best. Hammer mills are best at processing all grains, ear corn, hay, and roughage, whereas roller mills do not handle fibrous material well.

3 MIXING

3.1 Purpose

Mixing is carried out for three reasons:

- to make the proportions of the mix constant throughout a batch
- to increase feed intake by increasing the palatability of a ration
- to ensure no animal receives an overdose when ingredients, such as antibiotics, are added in very small amounts

Only a proper mix guarantees nutritionally balanced rations. As a general rule, the more complex the formula, the greater the need for adequate mixing. Proper mixing ensures that each portion an animal receives contains the same mix as the original batch. Hence every animal in the group receives the same feed formula. Some animals refuse to consume certain ingredients unless they are mixed with other, more palatable ones.

Knowledge of proper mixing strategies ensures a uniform mix. For example, poultry and swine have a low tolerance for ration imbalance. Consequently, operations mixing feed for these animals require more costly equipment than do operations distributing simple rations for beef cattle. Furthermore, feed for young stock must be mixed more accurately than feed for mature animals because young animals only consume small portions and they have a lower tolerance to variation in their diet.

The sequence for adding ingredients and the length of mixing time influence product segregation. Add major ingredients first and follow them with the minor ingredients. This approach also reduces the mixing time required to attain uniform distribution of ingredients. Individual mixers have optimum mixing times for various feed formulations: generally 2–6 min. Use assay testing of samples taken from the mixer at 1-min intervals to determine optimum mixing time for each ration. Mixing times above or below the optimum result in nonuniform mixing.

3.2 Theory

The coefficient of variation (C_V) measures the effectiveness of a mixer. The C_V reflects the extent to which a number of samples taken from a mix vary from the mean. Mathematically, a perfect mix would have a C_V of zero. Hence the lower the C_V, the more uniform the mix.

Use this equation to calculate the coefficient of variation:

$$C_V = (100\, s/\bar{x})$$

where C_V = percentage of the mean that is one standard deviation

s = standard deviation of the samples, based on the normal curve

$\bar{x}$ = mean value of all samples

The C_V is a statistical concept that describes the probability of a given percentage of samples falling within specified tolerance limits. The coefficient of variation is the percentage of the mean that is one standard deviation.

Minimizing the C_V of a feed mix increases the probability of animals getting their proper nutritional requirement at each feeding. In general a C_V of 5–10% would be quite acceptable for most livestock, barring most nutritional problems. For cattle, a C_V of 15–20% is satisfactory but a C_V of 30–50% can produce nutritional problems. For swine and poultry, livestock nutritionists consider a C_V of 11–12% satisfactory.

Some of the factors that affect mixing effectiveness are:

- bulk density
- size and shape of feed materials
- moisture content
- mixing time
- mixer loading and unloading procedures
- agitator design

3.3 *Bulk density* The bulk density (B) of common feed ingredients ranges from 200 to 600 kg/m^3. In general, feed rations with B greater than 380 kg/m^3 have lower C_V values than rations with B less than 380 kg/m^3. B greater than 380 kg/m^3 is typical for 100% grain rations. At the same time, grain–roughage rations typically demonstrate B less than 380 kg/m^3. Because of their wide range of bulk densities, grain–roughage rations generally do not mix as well as other rations. Fig. 30 shows the

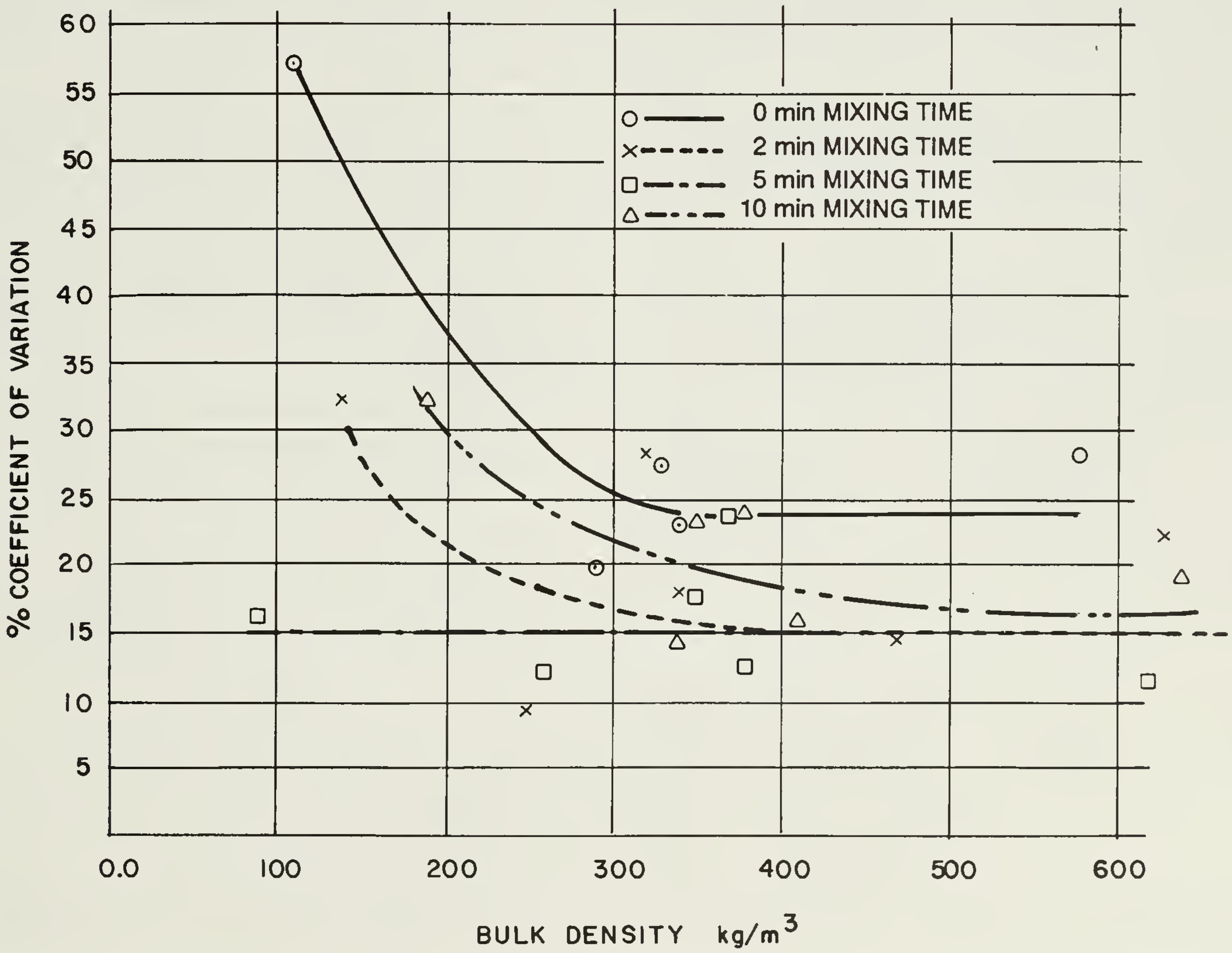

Fig. 30. Coefficient of variation vs. bulk density for a vertical batch mixer (Lenton 1975).

relationship between B and C_v for a vertical grinder–mixer.

3.4 *Size and shape of feed materials* The size and shape of feed materials vary widely and so contribute to the tendency of the material to segregate. The modulus of uniformity (U) describes the proportions of coarse, medium, and fine material in feed rations. For example, U for a well-graded feed sample would be 30% coarse, 40% medium, and 30% fine material (3:4:3). A ration containing 30–40% hay and straw typically has a U of 3:5:2. Table 10 compares the C_v with U for feed rations prepared with a vertical mixer. Feed containing higher proportions of coarse materials are less efficiently mixed than finer grinds and have higher C_v values. Coarse material such as straw allows dense, fine material to filter unevenly through the ration, causing uneven distribution of supplemental ingredients in feed rations.

3.5 *Moisture content* The effect on C_v is inconsistent when the moisture content of the feed ration falls within the normal range of 5–21%. Some particles tend to absorb liquids more than others, which changes density and friction characteristics and alters the performance of a mixer.

3.6 *Mixing time* The uniformity of the ingredients influences mixing time. As shown in Fig. 31, for a 100% grain ration mixed in a vertical mixer, the C_v drops quickly during the first few minutes of mixing and then tends to level out. These results indicate that 2–5 min represents the optimum mixing time for a grain ration. This mixing results in a C_v around 15%. Prolonged mixing adds little to ingredient uniformity and, in fact, may degrade particle-size distribution.

Table 10 Relationship between modulus of uniformity and mixing performance for a vertical batch mixer

	Modulus of uniformity	Coefficient of variability (%)
100% grain	1:5:4	17.5
	1:6:3	12.4
	0:6:4	11.4
Mixture of 60% grain and 40% hay	1:6:3	23.5
	2:5:3	16.0
	-	-

Note: Mixing time is 5 min.

Source: Lenton (1975).

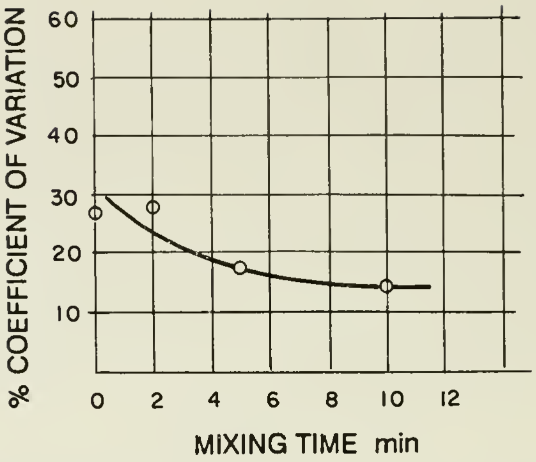

Fig. 31. Coefficient of variation vs. mixing time for a feed ration of 100% grain (Lenton 1975).

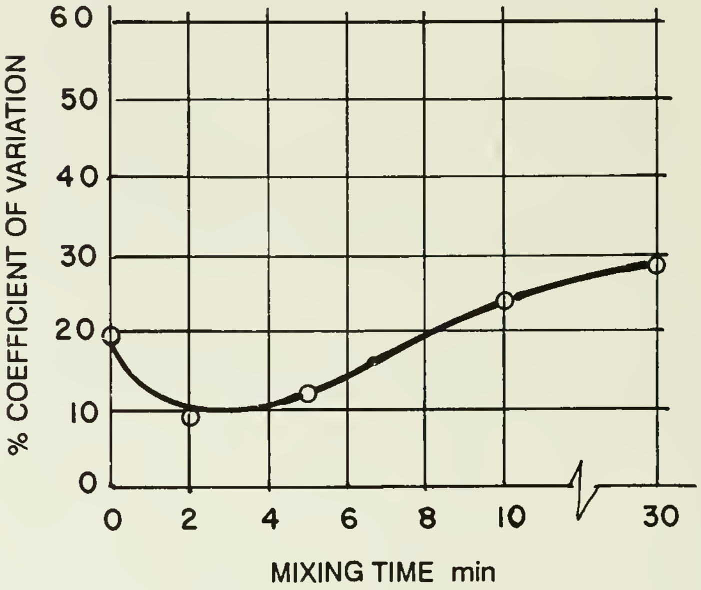

Fig. 32. Coefficient of variation vs. mixing time for a feed ration of 60% grain and 40% hay (Lenton 1975).

Fig. 32 illustrates another example. A ration of 60% grain and 40% hay combined in a vertical mixer–grinder showed C_v initially decreasing with time to a minimum value and then increasing again. In this case, optimum mixing time appears to be 2–5 min, resulting in a C_v about 20%. Mixing times longer than 10 min cause ingredients to segregate.

When mixing a grain–hay ration, take care to ensure that bridging does not occur on the mixing auger supports. If bridging happens, no mixing takes place and C_v values can exceed 25%.

Fig. 33 shows C_v plotted against time for a mixture containing 99.5% high-moisture corn silage and 0.5% salt. The ingredients were combined using a horizontal mixer. Increasing mixing time from 1 min to 10 min decreased C_v from 13.8% to 5.9%. Thus, the optimum mixing time is 5 min, achieving a C_v of 8%.

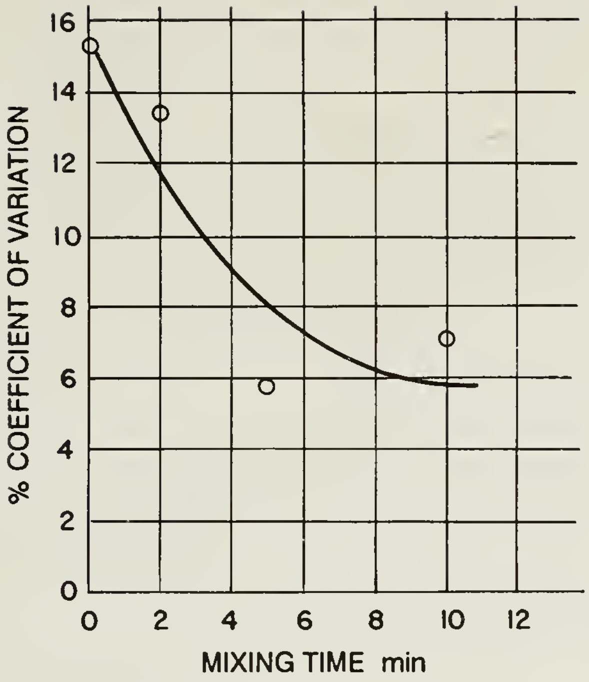

Fig. 33. Coefficient of variation vs. mixing time for a horizontal batch mixer (Lenton 1975).

3.7 *Loading and unloading mixers* To maintain consistently accurate mixing, keep the sequence of loading events constant from batch to batch. Load the major ingredients first and then add minor ingredients. This procedure reduces segregation so mixing time can often be shortened.

When unloading 100% grain ration from a vertical mixer, the uniformity of ingredients is maintained. However, with a ration of 60% grain and 40% hay, samples taken in the first 15 s of unloading may have mineral contents 2.5–6 times the average mineral content.

3.8 *Agitator design* The agitator design significantly affects mixing performance. Fig. 34 illustrates two agitator patterns: uniform flighting and expanded-bottom flighting. According to Lenton (1975), expanded-bottom-flighting designs mix batches containing high mineral concentrations better during the first 15 s of discharge than do agitators with uniform-flighting patterns.

3.9 *Types of mixers* Mixers are classified in this manual as batch or continuous flow. Three types of batch mixers are popular:

- horizontal
- vertical
- tumble

3.10 Horizontal batch mixers

Horizontal batch mixers consist of a trough-shaped container with a semicylindrical bottom, vertical sides, and an open top. One or more agitators join to the main shaft, which runs through the centre of the machine. Several designs for agitators are available. Ribbon and paddle types are most common.

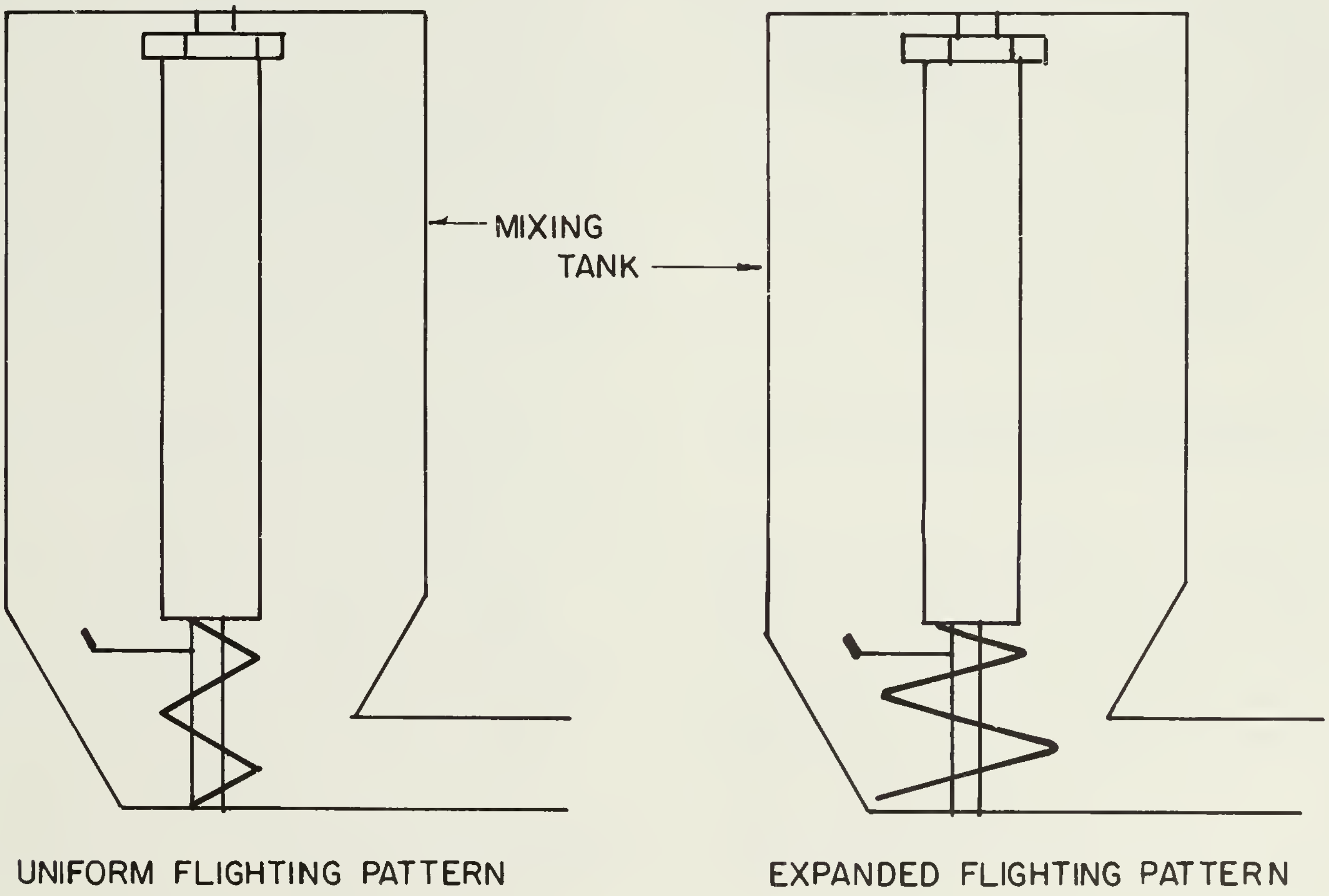

Fig. 34. Uniform and expanded flighting patterns for agitators in vertical batch mixers.

Virtually all mixers are made of steel. Sanitary mixers, constructed from stainless steel, are available for use with corrosive or highly abrasive products or for food applications. The ability of horizontal batch mixers to generate ration formulations with low C_v makes these mixers especially useful for a wide range of material.

In particular, use horizontal batch mixers for liquid feedstuffs and high-moisture rations. Discharge problems can arise when these materials are mixed in vertical mixers. Rations containing forage also mix better in horizontal batch mixers.

Horizontal batch mixers are most often used with a hopper scale. Mixing takes place in the hopper, while the next batch is formulated. The capacity of various horizontal batch mixers currently on the market ranges from 0.05 to 57 m^3.

3.11 *Ribbon agitators* Fig. 35 illustrates a horizontal batch mixer equipped with a double-ribbon agitator. During operation, the outer and inner ribbons move material in opposite directions, resulting in multiple mixing. The outer ribbon moves material toward the discharge; the inner ribbon moves it away. The small clearance between the ribbon and the bottom of the tub facilitates cleanout.

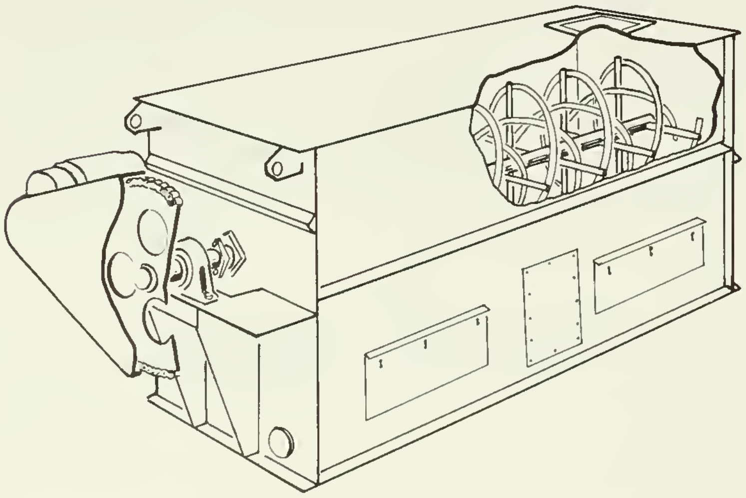

Fig. 35. Horizontal batch mixer with double-ribbon agitator. Source: Koppers Co., Inc.

Some mixers include outer ribbons equipped with wipers made of leather or synthetic material. These wipers aid cleanout and prevent cross contamination of batches. However, users report limited success with cleaning wipers because they wear quickly and require frequent replacement. One manufacturer offers an air-swept agitator with nozzles located on the agitator arms to clean the tank bottom, main shaft, agitator, and wall. This system requires air pressure of 350–700 kPa, depending on the size of the mixer.

Despite these auxiliary features, most feed mill operations do not require exotic cleaning equipment. Minimize the possibility of cross contamination simply by scheduling compatible feed mill production runs. When required, manual cleaning adequately serves the vast majority of agricultural applications.

3.12 *Paddle agitators* Paddle mixers use paddle- or plow-shaped agitators usually spaced in a spiral along the mixer shaft. Paddle blades scoop, lift, and tumble materials, recirculating them in a modified figure 8 pattern. Because of this mixing action, paddle mixers adapt well to fibrous and stringy material. As well, paddle mixers mix feeds with liquid additives more effectively than ribbon mixers. Fig. 36 shows a typical paddle mixer.

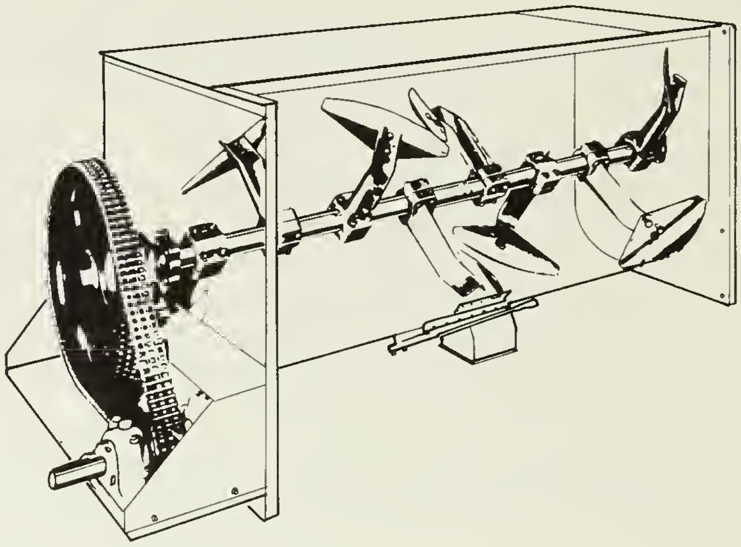

Fig. 36. Horizontal batch mixer with paddle blades. Source: Rapids Machinery Co.

3.13 *Installation* Installing a mixer often involves integration of loading, discharge, and conveying equipment within the confines of an existing structure. The limited headroom required by horizontal mixers makes them suitable in more locations than other types of systems.

Several configurations are possible:

- floor-mounted to discharge to a lower floor
- leg-mounted to discharge to a surge hopper or conveyor
- suspended from the ceiling

Discharge gates can be single or multiple. Indeed, the mixer can empty via complete bottom discharge to expedite unloading and cleanout. Bag dump hoppers and bucket elevators generally feed horizontal batch mixers. Alternatively, overhead scale hoppers and bins or floor-mounted augers deliver material to the mixer.

3.14 *Power requirements* Power requirements for horizontal batch mixers vary with three characteristics of the material:

- bulk density
- moisture content
- stickiness

In general, horizontal batch mixers use about twice as much power as vertical batch mixers of similar capacity. The additional power is required because the horizontal batch mixer accelerates more material at any given time.

Ribbon mixers require approximately 7–10 kW/t, whereas paddle types require about 12 kW/t for dry, free-flowing material. A wet mix is stickier and requires significantly more power because of the increased cohesion between particles.

Horizontal batch mixers operate at 20–50 r/min, depending on the diameter of the agitator. Manufacturers suggest 84–91 m/min as the ideal peripheral speed range. Adjust the speed of the agitator after installation to fine-tune the mixer performance.

3.15 Vertical batch mixers

Vertical batch mixers have a round hopper container with a screw running vertically through the centre. The mixing sequence involves collecting material at the bottom, transporting it vertically, and flinging it out the top. This sequence repeats many times during mixing until the material blends completely. The mixing period generally lasts about 5 min. Standard vertical batch mixers range from 1.4 to 7.8 m^3.

Fig. 37 shows some of the construction and operating details of a typical vertical batch mixer. To prevent segregation caused by material being flung against the mixer wall, install a deflector at the screw outlet. The deflector allows some material to pass while causing other material to drop closer to the centre. This arrangement enhances mix uniformity and reduces mixing time.

3.16 *Loading and unloading* Vertical batch mixers adapt well to various loading methods and locations. They can be loaded from the top via gravity or a pneumatic inlet. When pneumatic conveying equipment is used, locate the inlet tangentially to the mixer body to allow the mixer tank to act as a centrifugal receiver. As well, provide adequate venting. Fit vertical batch mixers between two floors; load it from the upper floor, and unload it from the lower floor.

Many vertical batch mixers can also be loaded from the bottom. In this case, mount a loading hopper on the floor with the cylindrical elevating section extending below floor level. Excavate beneath the floor to the appropriate depth. Fig. 38 illustrates a floor-loading mixer.

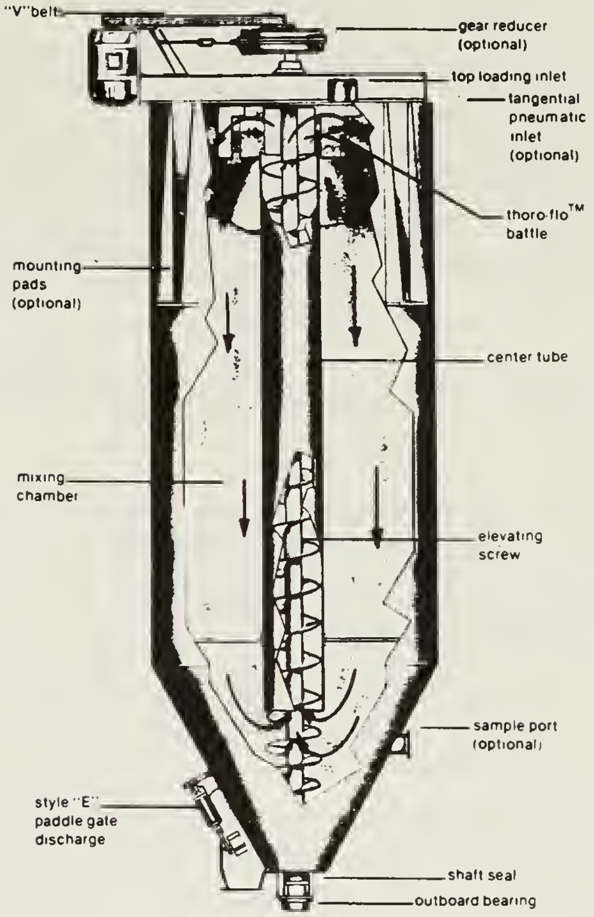

Fig. 37. Construction and operating details of a vertical batch mixer. Source: Koppers Co., Inc.

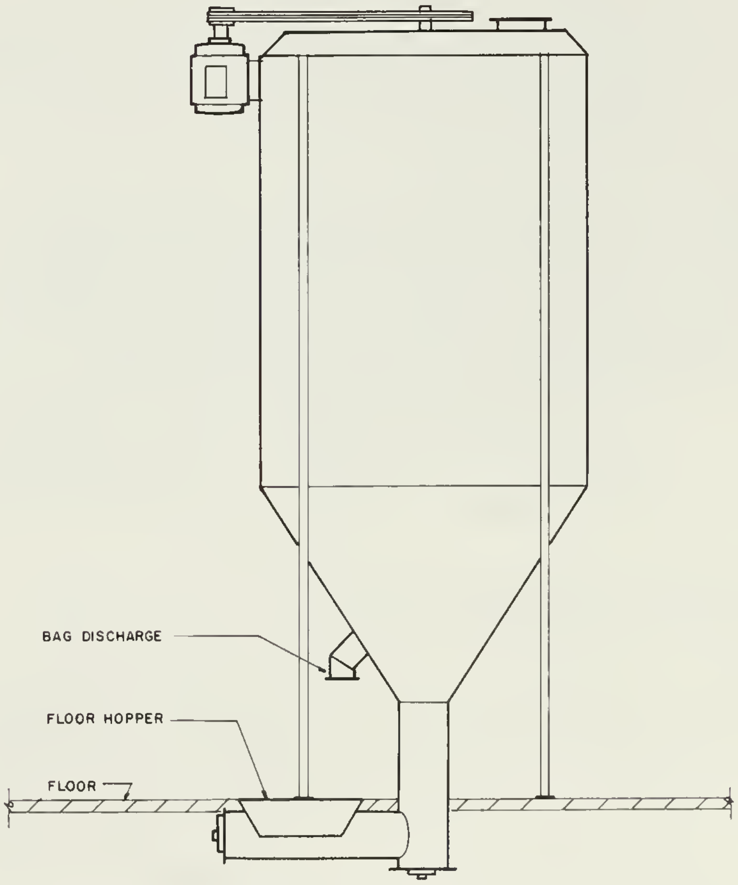

Fig. 38. Floor-loading vertical batch mixer.

Choose from various discharge styles for vertical batch mixers. Most discharge by gravity into a mechanical conveyor. Bagging directly off the mixer is also common. Yet, multiple discharge ports suit operations where flexible production is important.

3.17 *Power requirements* Vertical batch mixers require significantly less power than do horizontal batch mixers. In vertical batch mixers only a fraction of the material accelerates at any instant. For feed products, vertical batch mixers normally require 4.5 kW/t.

3.18 Comparing horizontal and vertical batch mixers

Consider these factors when choosing between horizontal and vertical batch mixers.

- Horizontal mixers initially cost more than do vertical mixers.
- Installing horizontal mixers requires more machinery because intake and discharge are at different elevations.
- Vertical mixers require minimal floor space; however, their headroom requirements are greater.
- Horizontal mixers demonstrate hourly production rates approximately 3 times those of vertical mixers, depending on the installation arrangement.
- Vertical mixers cannot handle liquids because of the flow problems created. Horizontal mixers can handle only nonsticky fluids.
- Cross contamination is a greater risk in vertical mixers than in horizontal ones because the units are not self-cleaning. Cleanout is better controlled in horizontal mixers because inspection is easier.
- The ability to repair or replace agitators varies with individual mixers, whether horizontal or vertical. Investigate this feature before selecting a mixer.

3.19 Tumble batch mixers

A tumble batch mixer consists of an enclosed vessel that mixes the material inside as it rotates. Common mixing vessels include revolving drums, which feature lifter plows on the interior surfaces, or surplus fuel drums mounted to rotate on a diagonal axis from corner to corner.

Tumble batch mixers most frequently handle fertilizer. Mixing times and power requirements are similar to those of horizontal batch mixers.

The mixer must be stopped to load and unload tumble batch mixers through an access hatch. This setup allows for complete cleanout. In contrast, production tumble mixers can often be loaded and discharged through a screw conveyor. This configuration, however, makes cleanout difficult.

Tumble batch mixers do not easily facilitate bagging. The addition of liquid into tumble mixers is not recommended.

3.20 Continuous-flow mixers

Continuous-flow mixers include:

- agitator types
- proportional-blending types

Use continuous-flow mixers to blend feeds and dry fertilizers where high-volume runs are common. Several ingredients can be continuously metered into a stream that enters the mixer. Typical metering devices include proportioning augers, rotary valves, or controlled orifices.

3.21 *Agitator mixers* Basically, agitator mixers are horizontal U-trough screw conveyors equipped with special flighting. Fig. 39 illustrates various flighting styles. Other, more sophisticated continuous-flow mixers have double-paddle agitators. Agitator mixers rely on automatic weighing equipment.

When selecting an agitator mixer, inspect these features:

- dust-tight covers that open easily
- bottom -drop doors to facilitate cleaning
- liquid applicator area

Fig. 40 shows a continuous-flow agitator mixer with these features.

Agitators commonly measure 1.8–6 m long with capacities of 650–900 kg/kWh, depending on the nature of the product, such as whether it is sticky or dry.

3.22 *Proportional-blending mixers* Use proportional-blending mixers when the various ingredients can simply be blended without undue regard for the uniformity of dispersion. Applications for proportional blending include:

- blending high and low grades of grain to receive the highest possible selling price for the whole
- blending high- and low-moisture grain to save the cost of drying and to reduce the financial penalty incurred when marketing over-dried grain

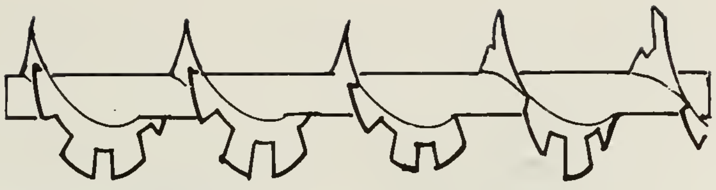

CUT FLIGHTING
Moderate Agitation for Material in Transit

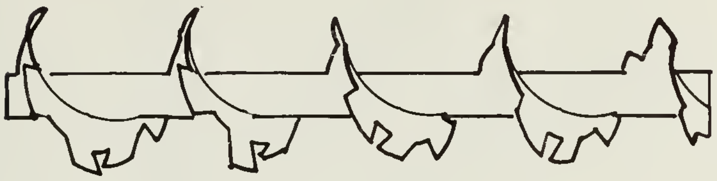

CUT and FOLDED FLIGHTING
Lift and Spill Material in Transit for Aeration and Mixing

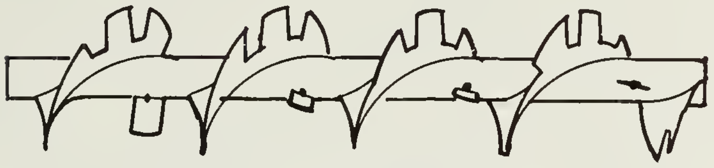

CUT FLIGHTING with PADDLES
High Degree of Mixing and Aeration for Material in Transit

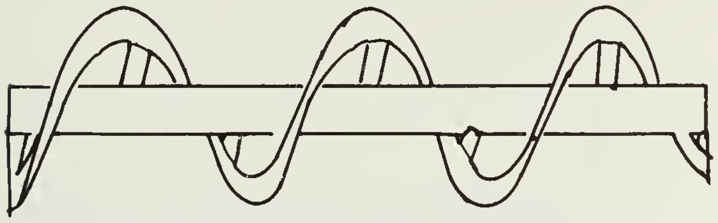

RIBBON FLIGHTING
For Sticky Material

Fig. 39. Flighting styles for agitator mixers.

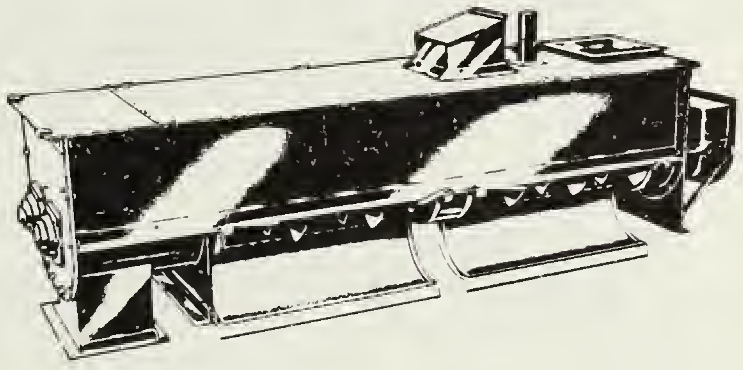

Fig. 40. Continuous-flow mixer. Source: Hayes and Stolz Industrial Manufacturing Co., Inc.

- blending inordinately clean grain with grain having an unacceptably high proportion of material other than grain

As these examples demonstrate, proportional blending best suits situations where sampling results are averaged over the entire load.

Proportional-blending takes place in two ways:

- by amalgamating known quantities of material in a storage or transport vehicle
- by continuously adding several ingredients to a common collection conveyor

Achieve the desired blend of materials in one of two ways. Control the flow rate for each material entering the mixer on a volumetric basis using variable-speed feeder screws or an adjustable feed gate. Alternatively, set the proportions of the materials on a weight basis; use variable-speed belt conveyors with belt weighers controlling the belt speed to yield the preset product ratio. Fig. 41 shows a blending operation.

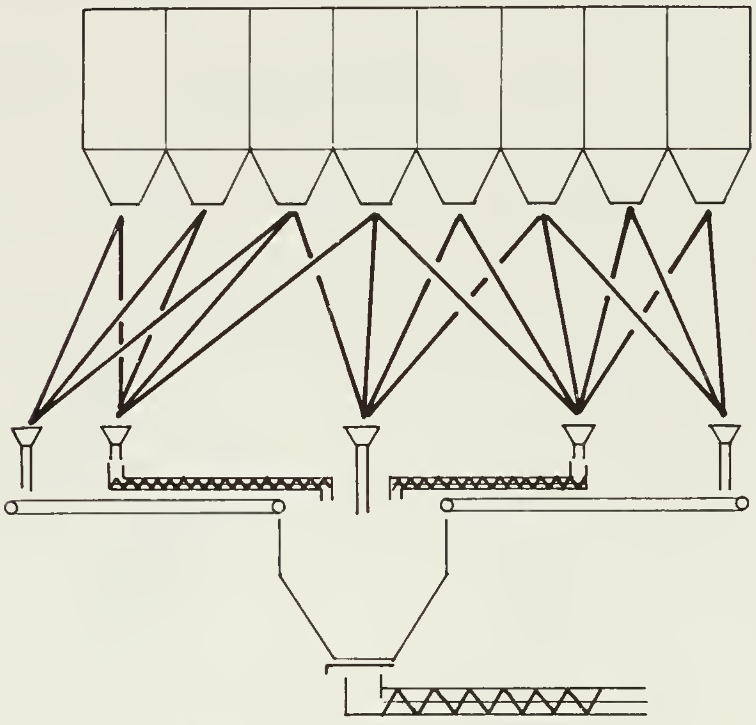

Fig. 41. Schematic view of a blending operation.

For practical purposes, conveying material at least 6 m through a conventional screw conveyor mixes the components adequately, through the action of the screw alone. If, however, the mix includes toxic ingredients such as urea, run the ration through a proper mixer to ensure uniform dispersion.

3.23 Mixer selection

Select a mixer based on its intended function. Choose a horizontal batch mixer for wet mashes, fats and oils, and wet roughage. Rely on a vertical batch mixer for dry grain rations because of its low cost and power requirements. As well, consider any physical constraints in terms of head and floor room and conveyor layout.

In selecting mixers for rations involving hormones, antibiotics, and other medications, ensure that the equipment can mix the ingredients to specifications set by regulating agencies. Moreover, check that the equipment can be cleaned out completely to prevent contamination of other feeds. Makeshift equipment such as cement mixers and augers rarely meet these requirements and cannot provide uniform dispersion of ingredients.

To optimize efficiency, allow the mixer to discharge as fast as possible. Temporary surge hoppers located ahead of the conveyor offer much cheaper storage than does the mixer. Consider hoppers where high capacity is required.

Size the mixer according to the work routine preferred by the operator. Consider these factors:

- quantity of material to be mixed periodically
- number of different mixtures to be prepared
- future expansion anticipated
- availability of mixing time and frequency of mixing

For normal operations of loading, mixing, and unloading, the mixing rates for various sizes of mixers follow:

Mixer size (kg)	Batch cycle time (min)
250	9–10
500	14–20
1000	28–35

The values in this chart assume filling and emptying by conveyor.

Remember, use the size of mixer quoted by the manufacturer only as a guide. The actual capacity in cubic metres depends on the density of the material being mixed. As well, to prevent spillage during mixing, ensure that the gross volume of the mixer is 5–10% greater than the volume occupied by the ingredients.

Livestock rations vary in density from 200 to 600 kg/m^3. Cattle rations are normally at the low end of this range, especially when the ration includes straw or hay. Swine and poultry rations often measure about 450 kg/m^3.

3.24 Sample problem: mixed rations for cows and followers, hogs, and hens

Select a mixer to generate mixed rations to feed 27 cows and 10 followers (heifers and calves), 140 feeder hogs, and 2500 hens.

Determine the maximum weekly rations required for the animals.

27 cows, each at 7 kg/day	=	1323 kg/week
10 followers, each at 3.5 kg/day	=	245 kg/week
140 hogs, each at 3 kg/day	=	2940 kg/week
2500 hens, each at 0.1 kg/day	=	1750 kg/week
Total mixed feed	=	5068 kg/week

As one option, select a 500-kg mixer. Use it daily (except Sunday) for the hog ration and four times a week for cows and hens. At 20 min a batch, excluding preparation and clean-up time, the mixer operates 4 h and 40 min a week.

If the operator prefers to mix all the rations in a single morning, a 1000-kg mixer may be more convenient. The total equivalent mixing time, at 35 min per batch, would be 4 h and 5 min. This time represents a relative reduction in mixing time of 6%. The availability of storage space for finished product and desired freshness of feed are likely to be the deciding factors. Thus the size of the mixer depends more on individual circumstances important to the farmer than on capital cost.

3.25 Seed treating

Seed can be treated with chemical fungicides, insecticides, trace elements, and inoculants. Chemicals can be applied as solutions, powders, and slurries. Because treatment chemicals are normally applied at rates as low as 400 mL/m^3, mixing must be thorough to ensure satisfactory results. Commercial units with capacities of 90–460 m^3/h, as well as smaller batch units of 0.5–2 kg, are available for mixing and treatment functions.

Chemicals are usually sprayed onto the seed as it cascades down through a spray booth. The seed next passes through a coating chamber, essentially a mixing flighting, which tumbles the seed to coat it uniformly. Fig. 42 shows a simple seed treater and Fig. 43 shows the various types of flighting available.

Another approach to seed treatment is to apply the chemical to a high-speed revolving disk. The disk atomizes the chemical into a mist through which the seeds pass. Fig. 44 shows one arrangement for a mist treater. This method is particularly useful for treating irregularly shaped seeds. Seed and chemical are metered separately. In the illustration, seed flows over a dispersion cone and passes through the mist chamber where each seed receives a relatively equivalent dose of chemical. The seed then moves through a coating chamber to ensure thorough mixing.

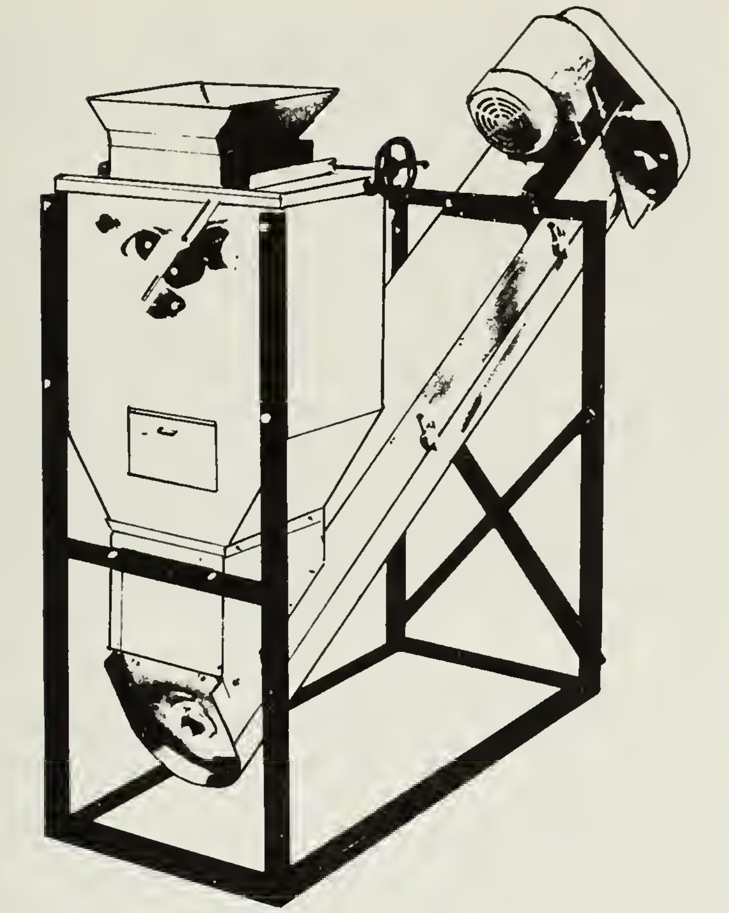

Fig. 42. Seed treater with mounted coating chamber. Source: Gustafson, Inc.

FLIGHTING and MIXING RODS
Standard for Small Grains and Corn Seeds

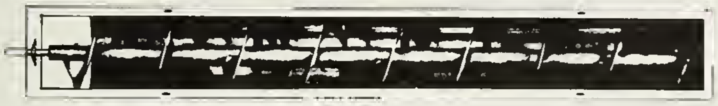

FULL FLIGHTING
High Capacity Treating

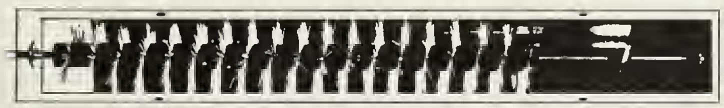

FLIGHTING with NYLON BRUSH
Gentle Seed Handling

FULL BRUSH
Especially Gentle Seed Handling

Fig. 43. Coating chamber flighting types. Source: Gustafson, Inc.

Fig. 45 shows a seed treater designed to apply powdered chemicals. In this case, a vibrating pan feeds chemical into the seed stream. The chemical is applied before the seed reaches the mixing chamber, starting the mixing process sooner than in other systems.

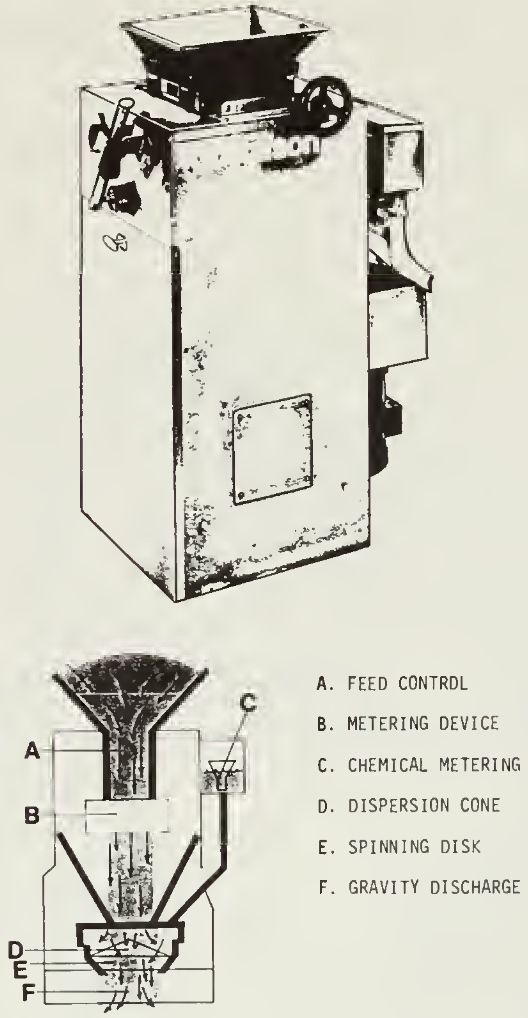

Fig. 44. Mist seed treater. Source: Gustafson, Inc.

Chemicals used in seed treatment are often quite toxic. Hence, take extreme precautions to protect people and livestock that may come in contact with the material. If possible, use all treated seed immediately after treatment. Treated seed requires special storage facilities. In addition, treated seed cannot be used for animal feed, may not meet germination standards if stored over a year, and is awkward to dispose of. Stored seed is also prone to contamination by pesticide residues from other seed and feed supplies. Preferably, treat seed only in amounts that can be used immediately.

Seed treatment is important in controlling seed-borne diseases. Seeds free from disease demonstrate an increase in percentage emergence and in seedling vigor. Table 11 lists typical yield enhancement data obtained from seed-treatment trials.

Table 11 Yield increase with seed treatment

Location	Crop	Yield increase (m^3/ha)
P.E.I.	spring barley	0.35
Sask.	spring barley	0.21–0.24
P.E.I.	winter wheat	0.26
Alta.	spring wheat	0.08–0.16

Source: Edgington, Kelly, and Reinbergs (1973).

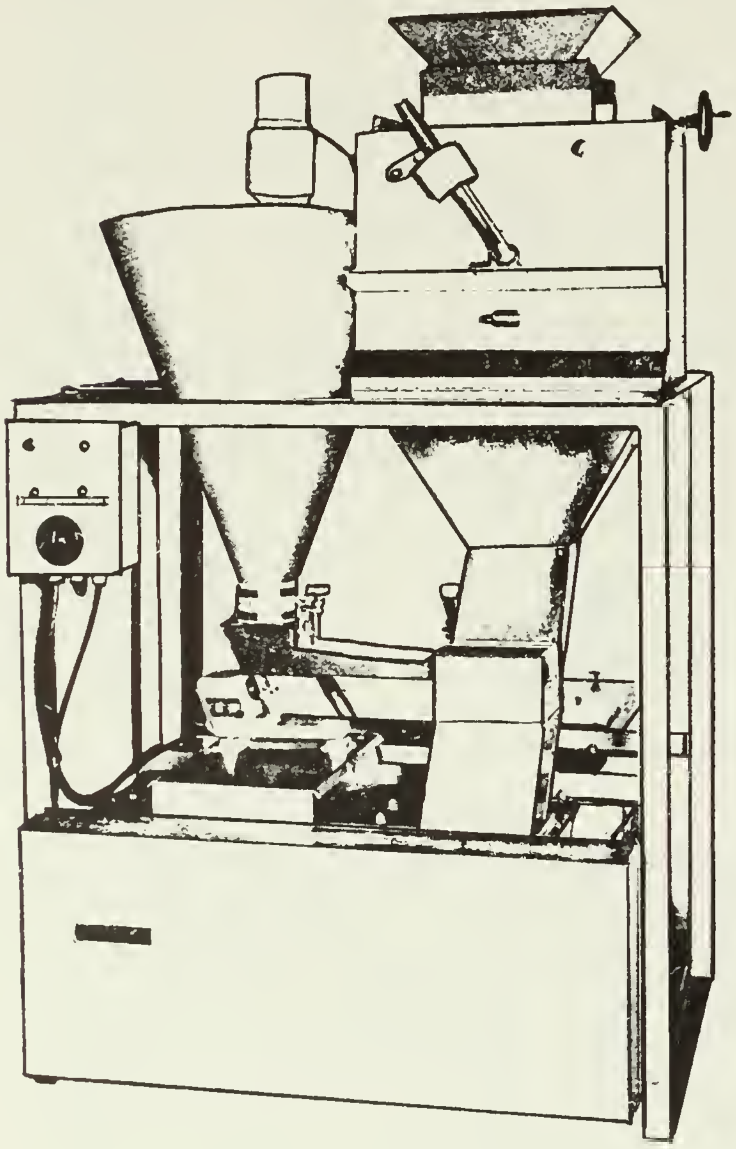

Fig. 45. Dust type seed treater. Source: Gustafson, Inc.

4 COMBINATION MILLS

Combination mills combine the operations of size reduction, mixing, and feeding into a single, multifunctional machine. Several manufacturers have assembled combination units that provide a variety of functions. These units may be either stationary or mobile.

4.1 Stationary mills

Stationary combination mills simplify ration formulation where raw ingredients are stored at a single location. Stationary mills include proportional grinder–mixers and packaged-pelleting plants.

4.2 *Proportional grinder–mixers* Proportional grinder–mixers consist of a hammer mill with four or more variable-speed feeder screws. The feeder screws simultaneously and continuously direct each ingredient into the hammer mill. Fig. 46 illustrates a common mill configuration. Overhead bins supply material to the proportioning screws, which feed the hammer mill. In the mill, material is ground and mixed. Finally, a discharge screw or a gravity discharge system unloads the product.

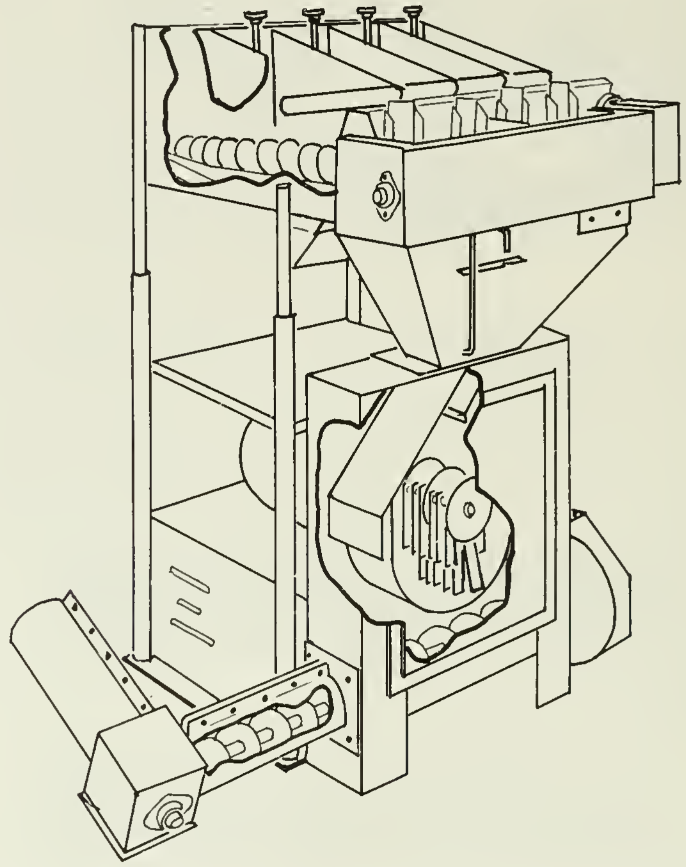

Fig. 46. Proportional grinder–mixer. Source: Clay Equipment Corp.

In an alternate configuration (Fig. 47), a roller mill grinds the material. It discharges into a mixing auger where supplements are metered in through vibratory feeders.

Successful use of a proportional grinder–mixer depends on properly calibrating the ingredient-metering device and frequently checking the system's adjustment. These mills meter ingredients volumetrically. Calibrate them by weighing the output from the separate metering channels. Repeat the procedure for various settings to generate a calibration table. Then adjust the machine to achieve the desired output indicated by the table.

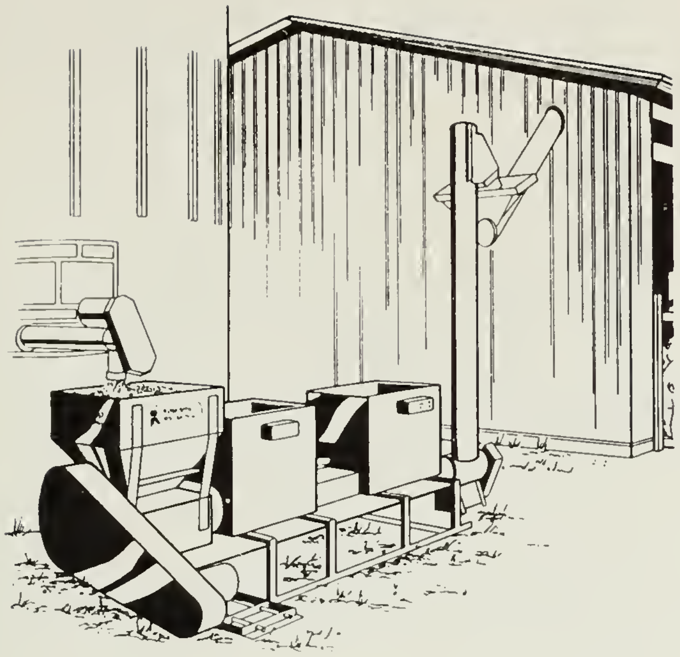

Fig. 47. Proportional grinder–mixer with roller mill. Source: Roskamp Manufacturing, Inc.

Note, however, that rations are formulated by weight but ingredients are metered by volume. Consequently, recalibrate the metering system if the bulk density of the ingredients changes. Rely on information from the equipment supplier for assistance in recalibrating the metering system.

Testing of proportional grinder–mixers on farms in Manitoba and Ontario revealed that 70% of prepared rations were unbalanced in calcium, phosphorus, and protein. The tests found improper mill calibration to be at fault. When properly calibrated, these mills produced rations with coefficients of variation of 11–12%, an acceptable value. See section 3.2 for more information on coefficients of variation.

The capacity of proportional grinder–mixers varies with the type of grain, moisture content, and grinding method. As a rough guide, units equipped with a hammer mill process around 600 kg/kWh of dry shelled corn through a 6.35-mm screen. Units equipped with a roller mill grind 600–2000 kg/kWh of dry shelled corn, depending on the size of the rollers and their groove pattern. Roller mills cannot, however, properly process more than one grain at a time, nor can they process roughage.

4.3 *Packaged-pelleting plants* Packaged-pelleting plants allow owners of small feed operations to produce pellets from individual formulas using local ingredients. The plants have all the components required to produce pellets, cool them, and discharge them by mechanical conveyor or load them into bags. These plants may include grinding units, but more often they require ingredients to be loaded already ground.

Fig. 48 shows a relatively simple plant setup. In this example, a grinder–mixer is used to prepare the ration, and mechanical conveyors supply and remove the product. Pellets

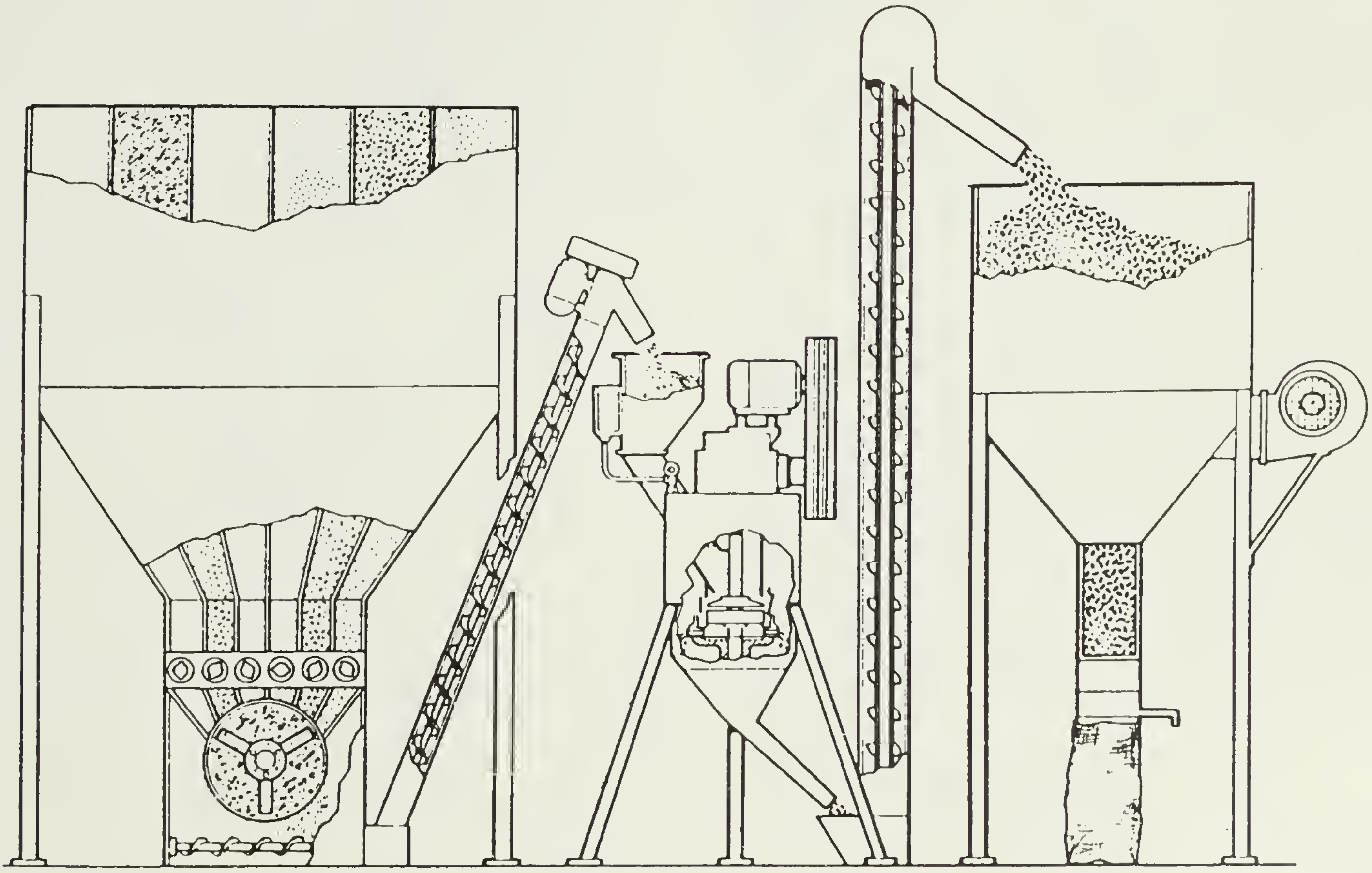

Fig. 48. Simple packaged-pellet plant. Source: Farm Choring Ltd.

discharge into an aerated bin for cooling; loadout is by bag. Water can be added with this system, but no provision is made for steam injection or reclamation of fines. Motors for pelleting plants of this type must provide 7.5–18.5 kW and produce around 40 kg/h with a 3.2-mm screen.

More sophisticated pelleting plants consist of large pelleting mills equipped with steam-injection units and positive-displacement feed intake (Fig. 49). Pneumatic conveyors move pellets produced by this type of plant into a collecting cyclone and then feed them into a cooler. After passing through the cooler, pellets can be left intact or crumbled, before going over a screen where coarse or fine particles are removed. Crumbles or pellets are discharged from the screen to a surge bin for bagging. The system redirects fines into the mash bin ahead of the pelleter.

With a 22-kW pellet mill and water injection, a capacity of about 900 kg/h can be achieved. Steam injection increases capacity to 1300–2300 kg/h.

With pelleting plants of this type, ingredients must be prepared before loading into the mash feed hopper. These plants produce higher-quality pellets at higher capacities than simpler models, mainly because they use more expensive pellet mills that are more versatile.

4.4 Mobile mills

Mobile mills suit applications where raw material is stored in various locations or where the feed must be distributed over a fairly large area or distance. Mobile mills include grinder–mixers, roller–mixers, and mixer–feeders.

4.5 *Grinder–mixers* Mobile grinder–mixers are versatile. They transport, grind, mix, and deliver feed in a single unit. These machines are designed to process grain, silage, and hay. The versatility of mobile grinder–mixers makes them useful as the initial processing system on small livestock operations.

Basically, a mobile grinder–mixer integrates a hammer mill and a vertical mixer on a trailer (Fig. 50). The system may also include scales, which are accurate only for measuring the major ingredients, such as grains. Supplementary feeds are added manually to the mixer through a separate hopper.

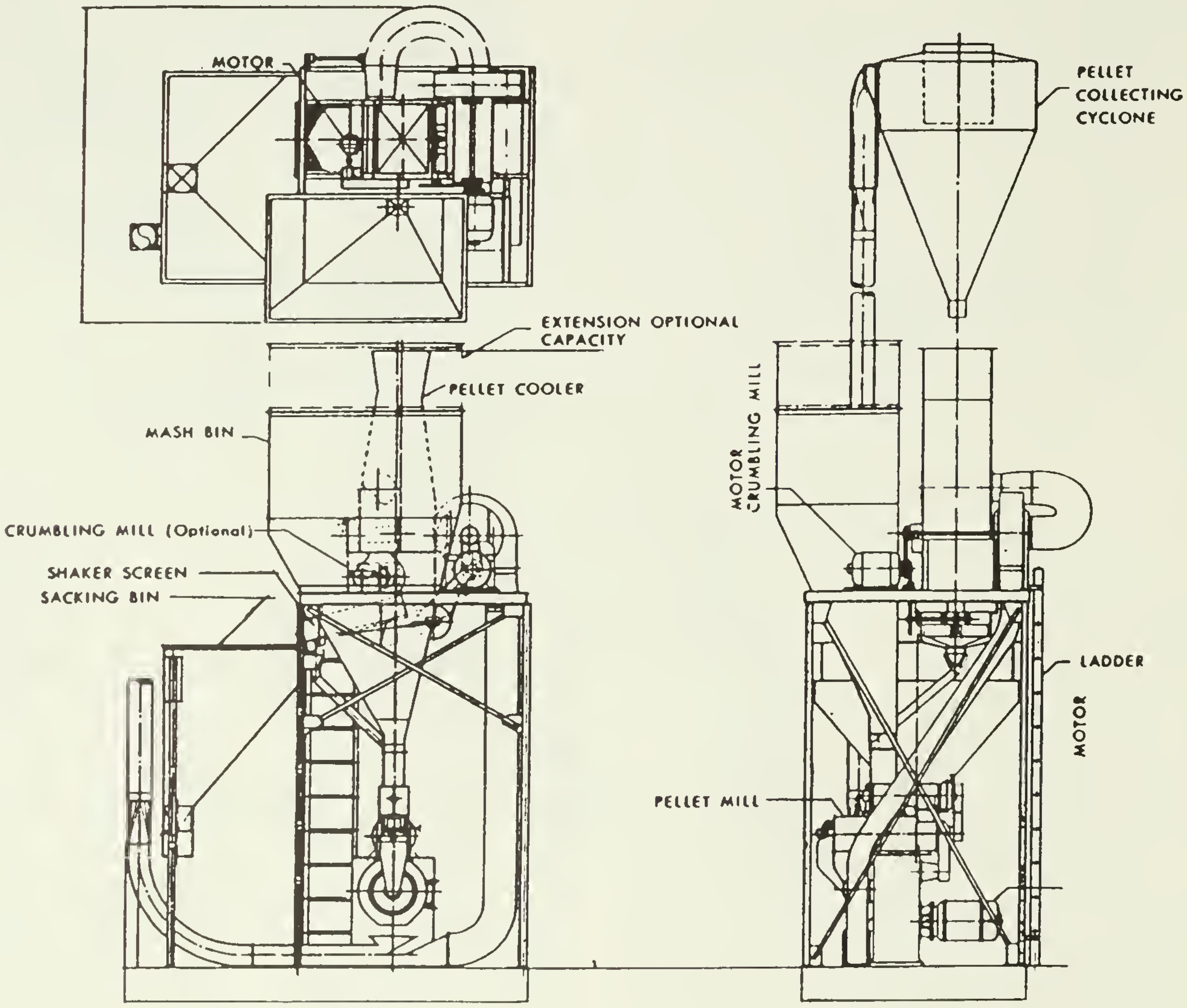

Fig. 49. Sophisticated packaged-pellet plant. Source: CPM Co.

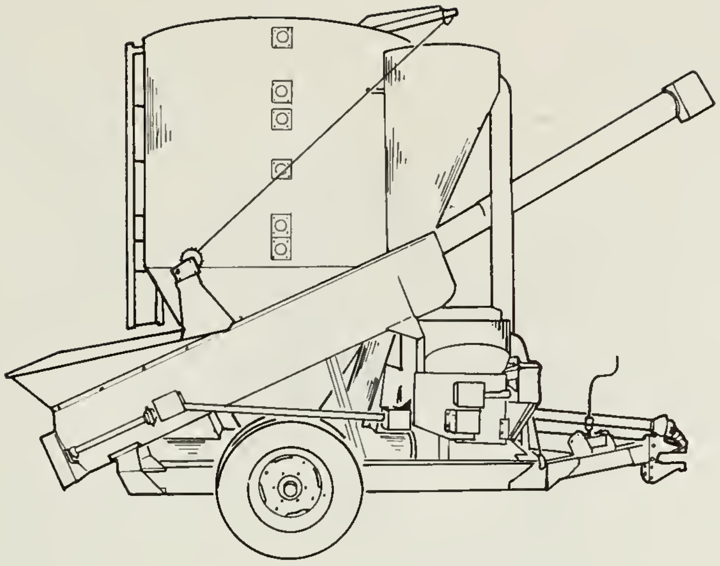

Fig. 50. Mobile mixer–grinder. Source: New Holland Division, Sperry Rand Corp.

High labor requirements, high operating costs, and restricted capacity limit the usefulness of mobile grinder–mixers. Farm tests conducted in Manitoba suggest the following procedure:

- Add supplements after at least 5% of the mixer volume is filled with grain.
- After all ingredients are added, run the mixer for 5 min. When grain and hay are being mixed, they begin to separate after 10 min.
- If any potentially harmful ingredients such as urea are included in the ration, discard the first 15 s of discharge.

Mobile grinder–mixers are powered by power takeoff (PTO). To drive a single grinder–mixer requires a tractor motor of 45–75 kW. Typical mixer tank capacities range from 2 to 3 t. Although grinding rates can reach 6–9 t/h, feed-preparation rates, including time for collecting ingredients, grinding, mixing, and feed delivery, measure 2–3 t/h.

4.6 *Roller–mixers* Mobile roller–mixers resemble mobile grinder–mixers. The roller–mixer is used in a roller mill, whereas the grinder–mixer is used in a hammer mill.

The size of the mixer governs the capacity of mobile roller–mixers. Hence, power requirements and capacities are similar for both grinder and roller mills.

4.7 *Mixer–feeders* Mobile mixer–feeders are typically horizontal mixers equipped with an unloading device designed to discharge into a feed bunk or a self-feeder. Various models come mounted on either trucks or trailers. Agitator elements are usually augers, although reel agitators are also available. Most mobile mixer–feeders are designed to handle small grains, shelled corn, and ground feed. Some models are available with conveyors large enough to handle silage and other roughage.

Generally, mobile mixer–feeders load from the top and discharge through a side-mounted chute, an elevator auger, or a chain conveyor. Electronic weighing systems may also equip these systems to gage the quantity of ingredients during loading and the discharge rate during feeding.

Fig. 51 shows a cross section of a mobile mixer–feeder with three auger agitators and a side chute discharge. Fig. 52 shows a unit with an auger elevator discharge mounted on a trailer.

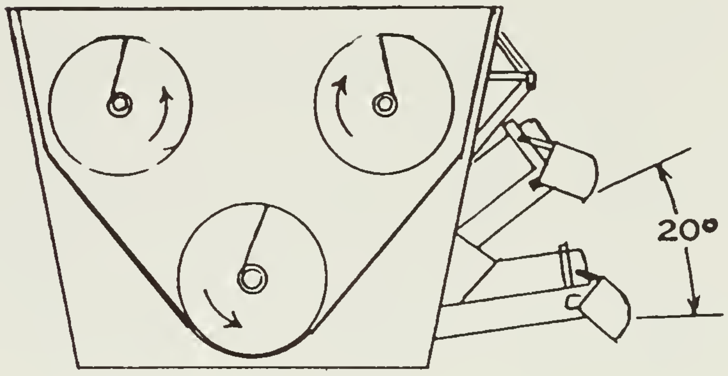

Fig. 51. Cross section of a mobile mixer–feeder. Source: Henke Machine, Inc.

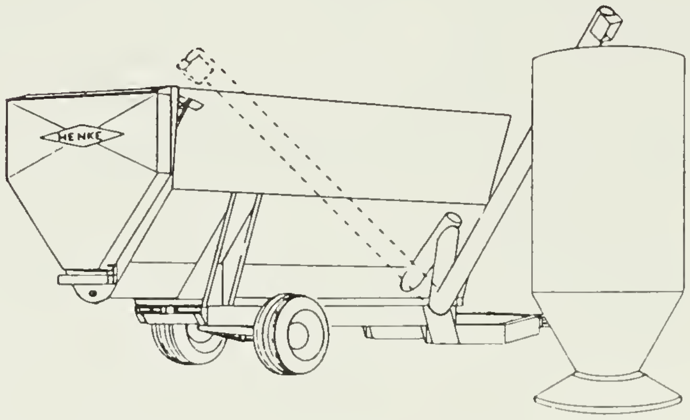

Fig. 52. Trailer mixer–feeder. Source: Henke Machine, Inc.

Capacities of mobile mixer–feeders range from 4.8 to 12 m^3. Power requirements depend on the type of ration, but as a rule haylage and molasses require more power than dry grains. Tractor or truck PTOs drive the units. Alternatively, smaller models come equipped with motors capable of generating 7.5–15 kW. Motors generating 30–37.5 kW may equip some large units.

Horizontal mixers better suit mobile applications than do vertical mixers. Horizontal mixers are more versatile and their centre of gravity is lower.

4.8 Hay grinders

Grinding to improve feed conversion of hay and straw and to decrease waste is becoming more common on Canadian farms. Ground hay is normally fed at the same time as the grain ration, either combined with it or as a separate offering.

The two machines most often used to grind hay are:

- small bale grinders
- tub grinders

4.9 *Small bale grinders* Small bale grinders shred solid bales of hay or straw through a hammer mill or a set of rotating knives. A screen behind the grinding area controls particle size. These machines are available with capacities of 5.5–18 t/h through a 25 mm screen. They have high power requirements because of the high fiber content of the material being ground and the shock of loading as each bale is forced into the grinding area. Small bale grinders require tractors with PTO power of 20–120 kW. Actual power requirements fluctuate with hay type, moisture content, size of the unit, and feed rate.

4.10 *Tub grinders* Tub grinders are portable PTO-driven hammer mills that are integrated into the floor of a rotary feed tub. They grind loose or baled straw and hay.

Tub grinders are designed to be batch fed with a front-end loader. As the tub rotates it regulates feed to the hammer mill. The size of the screen located below the hammer mill determines the fineness of grind. Ground material falls through the screen onto a screw or apron conveyor. The conveyor delivers the material to a slatted belt conveyor. Fig. 53 shows a typical tub grinder.

The grinding rate and power requirements for tub grinders depends on:

- the type of hay being ground
- whether the hay is baled or loose
- the hay moisture content and temperature
- the screen size used
- the available tractor power

Grinding capacity increases at low temperatures because hay becomes more brittle. High moisture content seriously reduces grinding capacity.

Tub grinders are rather inefficient, requiring high power inputs to produce modest throughput. Screen size is the most important operating factor directly influencing grinding rate, power consumption, and specific capacity.

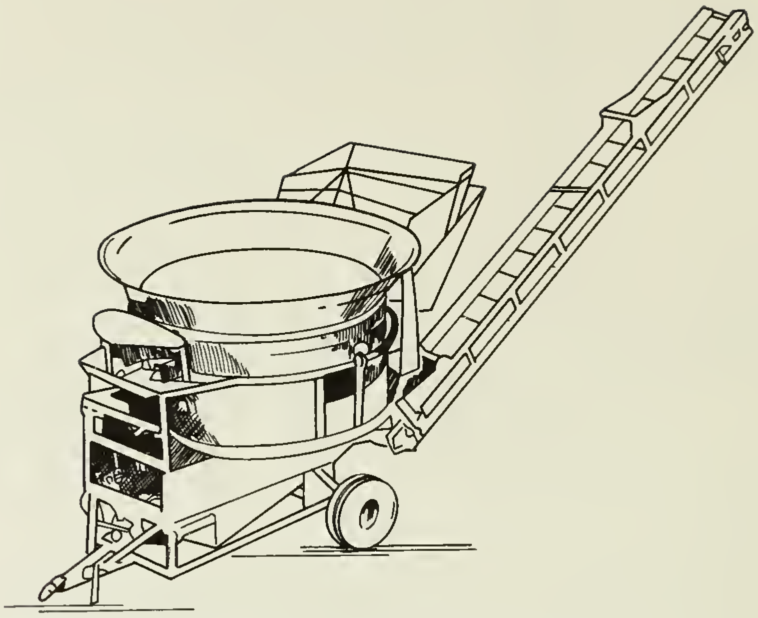

Fig. 53. Tub grinder. Source: Haybuster Manufacturing, Inc.

Reducing screen size by a factor of two generally doubles power consumption and halves grinding rate and specific capacity.

Tub grinders normally feed from a loader that dumps bales of hay into the tub. The heavy shock this imposes on the power train causes wide power fluctuations. Tests conducted by the Prairie Agricultural Machinery Institute (PAMI) indicated that available PTO power must be 50–90% higher than the average power input to prevent the tractor from stalling. Most tub grinders are equipped with tub governors to adjust the grinding rate so smaller tractors can be used.

PAMI tested five tub grinders sold in Canada between 1976 and 1977. Table 12 presents the institute's findings.

Table 12 Performance of a tub grinder with a 51-mm screen

Product	Grinding rate (t/h)	Average PTO power (kW)	Specific capacity (t/kWh)
Baled alfalfa	4.2–13.0	9.0–52.0	
Stacked alfalfa	3.4–16.0	13.0–54.0	0.16–0.37
Stacked barley straw	3.7–10.0	24.0–53.0	
Baled barley straw	2.8–18.6	33.0–100.0	0.08–0.20

Source: Prairie Agricultural Machinery Institute Evaluation Reports E0475A, E0475B, E0475C, E0475D, and E0475F.

REFERENCES

Batch and continuous-paddle-blade mixers for the processing industries. 1980. Marion, Iowa: Rapids Machinery Company. Catalog No. 180.

California master model pellet plant. San Francisco, Calif.: California Pellet Mill Co. Form 5641-R.

Clay meter/mill. Cedar Falls, Iowa: Clay Equipment Corp. Bulletin MM-307.

Edgington, L.V.; Kelly, C.B.; Reinbergs, E. 1973. *Availability of cereal seed treatment in Ontario.* Ontario Ministry of Agriculture and Food. Agdex 110/23.

Ensminger, M.E.; Olentine, C.G. 1978. *Feeds and Nutrition.* Clovis, Calif.: Ensminger Publishing Company.

Larson, F.D. 1978*a*. *Reduction hammer mill.* International Feed Milling, Production, and Grain Processing Seminar. Winnipeg, Man.: Underwood McLellan Ltd.

Larson, F.D. 1978*b*. *Reduction roller mill.* International Feed Milling, Production, and Grain Processing Seminar. Winnipeg, Man.: Underwood McLellan Ltd.

Larson, F.D. 1978*c*. *Mixing fundamentals.* International Feed Milling, Production, and Grain Processing Seminar. Winnipeg, Man.: Underwood McLellan Ltd.

Lenton, K.G. 1975. *Evaluation of mixing performance of on-farm feed-mixers.* Canadian Society of Agricultural Engineers. Paper No. 75-109.

Lewis, J.E. 1978. *Roller mills in grain processing.* Ottawa, Ont.: Canadian Feed Industry Association.

Lister farm feed pelleters. Edmonton, Alta.: Farm Choring Limited.

Naylor, J.L.; Smith, R. 1981. *Roller mills vs. hammer mills on corn.* American Society of Agricultural Engineers. Paper No. 81-3028.

Naylor, J.L.; Smith, R. 1981. *Roller mills (current state of the industry).* American Society of Agricultural Engineers. Paper No. 81-3027.

Nyborg, E.O. 1978. *Sperry New Holland model 379 tub grinder.* Prairie Agricultural Machinery Institute. Report No. E0475A.

Nyborg, E.O. 1978. *Farmhand model F890-A tub grinder.* Prairie Agricultural Machinery Institute. Report No. E0475B.

Nyborg, E.O. 1978. *Haybuster model C-9 tub grinder.* Prairie Agricultural Machinery Institute Evaluation. Report No. E0475C.

Nyborg, E.O. 1978. *Bearcat Tub-Master feed grinder model 4200.* Prairie Agricultural Machinery Institute. Report No. E0475D.

Nyborg, E.O. 1978. *Haybuster model H-1000 tub grinder.* Prairie Agricultural Machinery Institute. Report No. E0475F.

Operation and instruction manual for Bliss eliminator hammer mills, model E-1912-TF. Newkirk, Okla. : Bliss Industries.

Prew, S.R. 1981. *Increasing hammermill efficiency: a need in an era of rising power costs.* Pointers for profits reprint SR-1. Muncy, Penn.: Koppers Engineered Products.

Protz, A. 1976. *Farm feed processing and handling.* Ottawa, Ont. : Agric. Can. Publ. 1572.

Reece, F.N.; Lott, B.D. 1985. *Roller mills found competitive in broiler feed production.* Feedstuffs November 25, 1985.

Roskamp feed processing centers. Cedar Falls, Iowa: Roskamp Manufacturing, Inc. RFPC-80-CP.

Roskamp 12 × 30 roller mill operation manual. Waterloo, Iowa: Roskamp Manufacturing, Inc.

Roskamp pork producer. Cedar Falls, Iowa: Roskamp Manufacturing, Inc.

Summerfield, A.J. 1984. *Feed preparation on the farm.* Agricultural Engineer, Winter 1984.

Tailor-made crushing. Hamburg, West Germany: Gebr. Bauermeister and Co.

Thomas, G.F. 1958. *Basic facts in focus of grinding, mixing conveying with air.* The Feed Bag 4:88–90.

Weeden, J.K.; Norrish, J.G. 1981. *Stationary blender/grinders—A field evaluation.* Canadian Society of Agricultural Engineers. Paper No. 81-101.