DESIGN OPTIONS FOR BARRIER-FREE AND ADAPTABLE HOUSING

PE 0185

Canada Mortgage and Housing Corporation offers a wide range of housing-related information. For details, contact your local CMHC office or call 1-800-668-2642.

Cette publication est aussi disponible en français sous le titre :
Solutions applicables à la conception de logements accessibles et adaptables
PF 0185

Canada

DISCLAIMER

Canada Mortgage and Housing Corporation (CMHC), the Federal Government's housing agency, is responsible for administering the National Housing Act.

This legislation is designed to aid in the improvement of housing and living conditions in Canada. As a result, CMHC has interests in all aspects of housing and urban growth and development.

Under Part IX of this Act, the Government of Canada provides funds to CMHC to conduct research into the social, economic and technical aspects of housing and related fields, and to undertake the publishing and distribution of the results of this research. CMHC therefore has a statutory responsibility to make widely available, information which may be useful in the improvement of housing and living conditions.

This publication is one of the many items of information published by CMHC with the assistance of federal funds. The views expressed are those of the author(s) and do not necessarily represent the official views of Canada Mortgage and Housing Corporation.

ISBN 0-660-16620-8
Cat. No. NH15-146/1996E

Printed in Canada
Produced by CMHC

SOLUTIONS FOR THE DESIGN OF BARRIER-FREE AND ADAPTABLE HOUSING

PART 1: PERFORMANCE CRITERIA AND ARCHITECTURAL CHARACTERISTICS

Design guide for developers of residential projects

presented to:

Tom Parker, Project Manager
Canada Mortgage and Housing Corporation
700, Montréal Road
Ottawa (Ontario) K1A 0P7

by:

Société Logique Inc.
Pierre Richard, architect
Patricia L. Falta
3250, boulevard St-Joseph Est
Montréal (Québec) H1Y 3G2

October 1995

TABLE OF CONTENTS

DESIGN OPTIONS
FOR BARRIER-FREE AND ADAPTABLE HOUSING

Foreword

As you read this book, you will discover that **barrier-free and adaptable housing** is a simple, inexpensive architectural concept that can be easily integrated into building projects. Some of its characteristics are flexibility, increased security, improved functionality, and ease of maintenance. However, its main characteristic is that it can be easily adapted to meet the changing needs of occupants. Builders who incorporate this concept into their plans are likely to find a broader market for their product.

This publication grew out of a series of consumer focus groups held in major Canadian cities by Canada Mortgage and Housing Corporation in 1993. It reflects what participants said about the housing characteristics they most desired and answers a number of questions, including the following:

What is barrier-free and adaptable housing?

Who can use this type of housing?

How does is it differ from traditionally designed housing?

How can a developer make projects barrier-free and adaptable? How much more will this approach cost?

This publication provides design information that will enable developers to make informed decisions on accessibility. It aims to stimulate the production of housing that responds better to social and demographic trends so that the residential stock remains adequate to house Canadians.

We have tried to produce a document that can benefit all developers of residential projects, private, public and non-profit. We hope that it will be a source of encouragement and a reference for your future projects.

La Société Logique Inc.
Patricia L. Falta
Pierre Richard

Introduction

This document is divided into two parts.

Part 1 contains four sections:

1) The **introduction** introduces the concept of barrier-free and adaptable housing and describes its client groups.

2) The **implementation section** aims to help developers adapt the proposed designs to fit their projects.

3) The **technical section** describes the architectural characteristics of barrier-free and adaptable housing, and outlines performance criteria for building components and dwelling units. It contains 31 themes.

   The first 13 themes deal with multi-family housing:

   1. Access to multi-family buildings
   2. Vestibule and entrance hall
   3. Public corridors
   4. Elevator
   5. Public stairs
   6. Fire safety measures
   7. Garbage chute
   8. Community room
   9. Semi-public toilet
   10. Laundry room
   11. Common storage
   12. Exterior pathways
   13. Parking area for multi-family buildings

   Two themes are specific to small residential buildings.

   14. Access to small residential buildings
   15. Parking area for small residential buildings

   Nine themes focus on the dwelling unit:

   16. Entry to dwelling unit
   17. Circulation within dwelling unit
   18. Kitchen
   19. Bathroom
   20. Bedroom
   21. Living room
   22. Balcony
   23. Storage space
   24. Laundry space

   Seven themes deal with common elements, which are found in most of the spaces described:

   25. Doors and thresholds
   26. Hardware
   27. Electric switches and outlets
   28. Lighting
   29. Windows and glazed panels
   30. Heating and air-conditioning
   31. Paving and flooring

4) The last two themes treat special issues:
   Meeting special needs
   Home automation

Part 1 may be used alone as a reference document by developers, architects, occupational therapists and others interested in the barrier-free and adaptable housing. Those who use it in conjunction with Part 2, however, will be in a better position to grasp the architectural and economic implications of the proposed concept.

Part 2, a cost estimate study, contains the following sections:

* methodology, including references used to establish the costs presented
* tables, consisting of cost estimates which correspond to themes outlined in the technical section of Part 1.

Part 2 was prepared by Roy LGL Inc., a Montréal consultant in construction cost estimates affiliated with SNC-Lavalin.

Increased need for barrier-free and adaptable housing

The Canadian population is aging. In 1986, 10.7 percent of Canadians surveyed for the Census were 65 years old or more. By 1991, the number had increased to 11.6 percent, and by 2011 it is expected to include one Canadian in five.

The growth of the elderly population will bring about significant changes in the housing market. As early as 2017, about 50 percent of households will be headed by a person 55 years or more. These changes will be seen in the architectural design of dwelling units and residential buildings, as well as in materials and equipment.

Many of the needs of an aging population can be satisfied by safer and better-lit premises, materials that are easier to maintain, equipment that is easier to manipulate, and pathways that are easier to use. If these features become realities, a greater percentage of seniors will be able to remain in non-institutional residential settings for longer than is possible today.

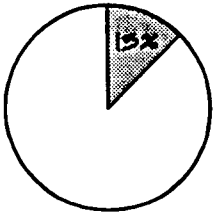

% of Canadian population with functional limitations in 1986

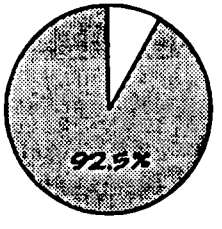

% of Canadian population with functional limitations and living in standard residential settings in 1986

A large proportion of the population has some limitations. The Health and Activity Limitations Study carried out by Statistics Canada in 1986 indicated that 13 percent of Canadians were functionally limited in mobility, agility, hearing, vision or speech. The number grew to 15 percent in 1991.

It is true that not all people experience the same level of limitation. For its survey, Statistics Canada established three levels of functional limitation: slight, moderate and severe. As a consequence, the housing problems of people who fit these categories can be expected to differ. Some people cannot leave their living unit in case of emergency; others cannot use the bathroom without help; still others cannot hear a fire alarm. However, standard residential settings pose some inconvenience for all of them.

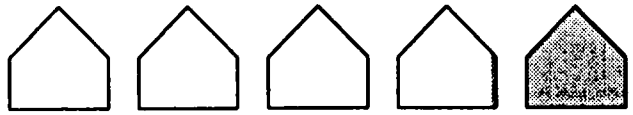

% of Canadian households having at least one person with limitations

An important clientele

These people comprise a significant proportion of the population. In 1986, fewer than eight percent of all people with functional limitations (mostly 65 years of age or older) were living in institutions. By far, the large majority lived in standard residential settings. They are vitally concerned with making their environment accessible and barrier free,

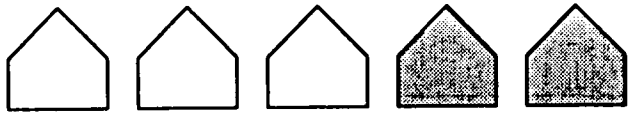

% of Canadian households made up of people 65 years of age and older having at least one person with limitations

and they could all benefit from housing that takes their needs into account.

In 1986, more than a fifth of all Canadian households included at least one person with functional limitations. This means that more than one fifth of all households could benefit from barrier-free and adaptable features. The implications are obvious for developers who may be looking for a wider range of clients.

The housing occupied by households that include people with limitations does not differ significantly from that occupied by other Canadian households. In 1986, approximately 64 percent of these households were home owners and 36 percent were tenants.

But the percentage of individuals affected by the accessibility issue is far greater than the 15 percent of the population with limitations identified by Statistics Canada in 1991. Consider the households formed by people 65 years of age and over. Approximately 40 percent include at least one person with functional limitations. These households are all part of a wider social network, of friends, relatives and neighbours. Many of them will want to make some adjustment in their houses for the comfort of these seniors. Thus, the pressure generated by the limitations of each individual may extend far beyond a single household.

Financial capacity of households

The efforts invested since 1981 to integrate persons with limitations, particularly in education and the professions,have raised their income levels. As a result, although many households with at least one person with limitations still have an income below the poverty line, a surprisingly high number have incomes higher than the Canadian average.

Table 1 indicates that in 1986, 37 percent of such households had annual incomes of at least $30,000. These people are full-fledged consumers, and their purchasing power will continue to increase along with their degree of integration in society.

Table 1: Household incomes

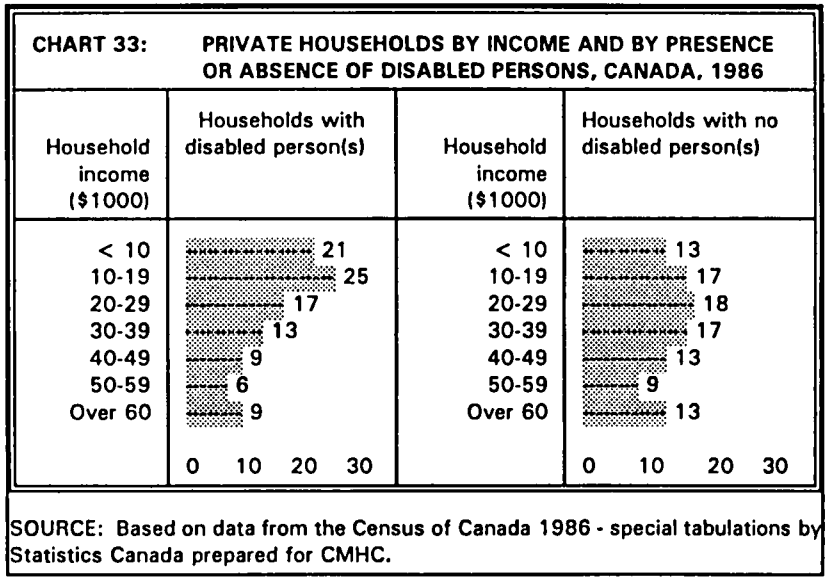

Those in this client group who are housed in the private sector market are poorly served by traditionally designed housing. Whether they are interested in modest or luxury accommodations, all will seek housing that is barrier free and adaptable.

Characteristics of barrier-free and adaptable housing

In a barrier-free and adaptable housing project, all interior and exterior public spaces, as well as the housing units, are built so that they are accessible to all residents and visitors, regardless of their personal requirements.

This type of housing is also designed so that it can be easily adapted to accommodate people in wheelchairs, those with reduced mobility, and people with visual or hearing limitations, as well as people with no evident limitations.

A few major characteristics assure good performance in barrier-free housing:

1) It allows free access to buildings, housing units and services for people with mobility, hearing or vision limitations.

2) It provides adequate turning and working space (1500 mm) for wheelchairs in housing units and public spaces.

3) It improves the safety of people engaged in normal daily activities.

4) It provides features that increase safety in emergencies.

5) It provides features that make it easier to use and maintain the building, dwelling units and equipment.

Manoeuvring space

The turning space described in this guide allows a wheelchair to be turned fully. It also enables people using walkers or manipulating a child's stroller or packages to manoeuvre in critically small areas, such as a vestibule, corridor, kitchen, balcony or bathroom.

This turning space is normally shown to be beyond the reach of swinging doors. Except in kitchens and bathrooms, turning spaces that encroach on the door swing area may be equally acceptable, although limiting the space may present difficulty for certain users.

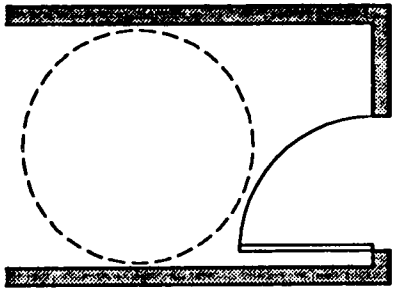

TURNING SPACE LOCATED BEYOND THE DOOR SWING

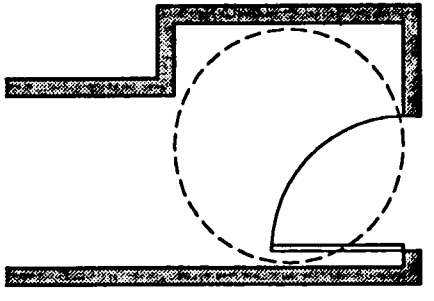

TURNING SPACE ENCROACHING ON THE DOOR SWING

Size of buildings and dwelling units

In general, both in multi-family buildings and single-family houses, barrier-free and adaptable dwellings require no more space than comparable dwellings. The challenge in either case is to design the building and dwelling units properly and to choose products wisely.

To be sure, barrier-free and adaptable design is easier in dwellings with generous spaces than in those with limited space. When additional space is required (such as turning space for wheelchairs, which may require enlarged entryways and bathrooms), it is often possible to compensate by reducing less critical areas in the dwelling.

The two examples on the next page show accessible and adaptable units with floor areas comparable to those minimally recommended by CMHC for conventional units of the same type.

Adaptability

Barrier-free housing may not respond fully to the functional needs of some individuals. When this is the case, adaptability may play an important role.

An adaptable dwelling is designed to simplify modification or the installation of equipment to meet the changing needs of occupants, such as elderly persons who lose their mobility. Such occupants would normally have to move, and lose the social network they have established in their neighbourhood.

Like people with functional limitations, many elderly persons can take advantage of adaptable elements in dwelling units, such as reinforced walls that allow for the installation of grab bars in the bathroom.

Cost implications

Since barrier-free and adaptable housing can be built to occupy the same area as traditional units, increased space costs need not be a consequence of barrier-free requirements. In very small units, where additional space is required to ensure access, the cost of such space is lower than the average cost per unit area of the dwelling.

This guide has attempted to balance acceptable performance levels with economy and to ensure that projects are economically feasible. Accordingly, it proposes designs and features that result in costs that are as near as possible to those for traditional designs. It also focuses on features than can benefit all segments of the population, rather than on custom designs and special equipment that may be required by persons with a particular disability.

Opportunities for developers

It is clear that the principles outlined in this guide can satisfy the needs of a changing and diverse population. Barrier-free and adaptable housing can be used to advantage by people who live in modest or luxurious projects, in single-family housing, condominium housing or rental units.

Developers have a choice: they can limit themselves to units intended solely for a single client group, or they can produce units that can accommodate both their regular client groups and the growing market that has been described.

The latter course offers many advantages, both for developers and for their clients.

- Developers and landlords can satisfy a growing, new client group, and add to their regular client pool.

- With barrier-free and adaptable housing, residents can remain in their housing units even when their needs change as they age or if they are suddenly required to cope with temporary or permanent limitations.

- Developers can offer a product that better satisfies the needs of consumers and presents a significant competitive advantage.

- By offering a product that can meet short- and long-term client needs, developers can help maintain property investment value for home owners and landlords.

- A dwelling that takes advantage of barrier-free and adaptable elements will be more functional, safer and more flexible. It can be of significant advantage to all residents, not just those with limitations.

BARRIER-FREE AND ADAPTABLE DWELLING UNIT

EXAMPLE 1: ONE-BEDROOM, 54 M^2 (580 FT^2)

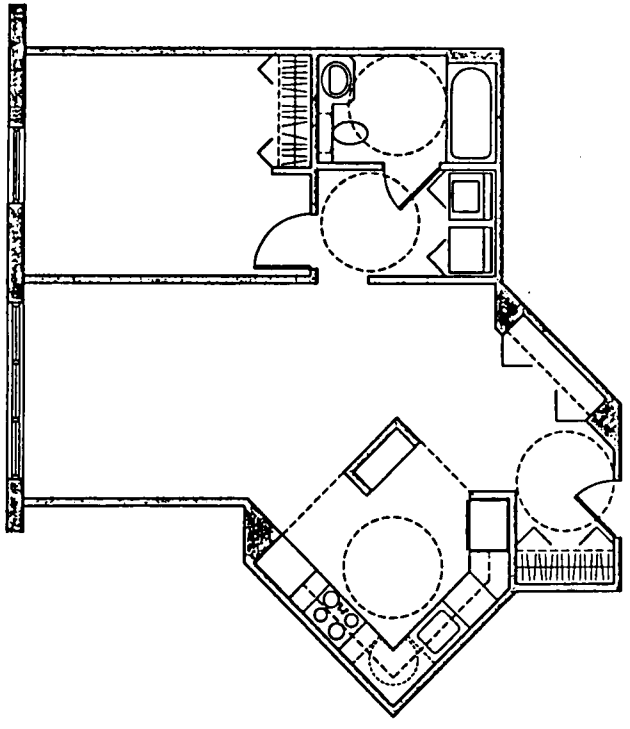

EXAMPLE 2: ONE-BEDROOM, 57 M^2 (610 FT^2)

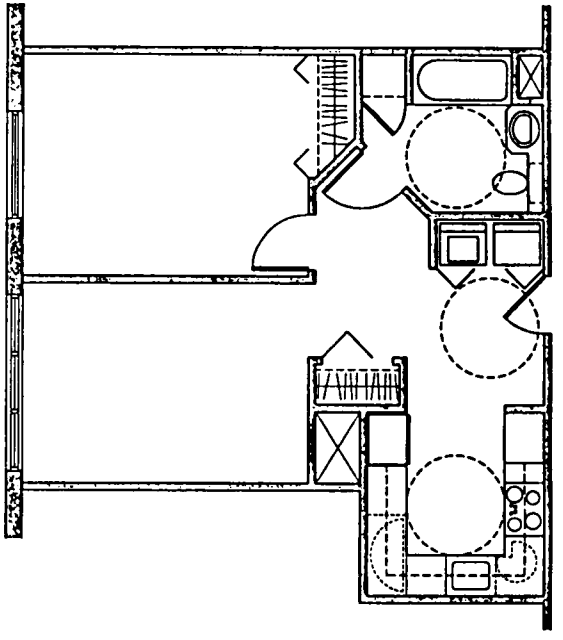

2.0 IMPLEMENTATION: ADAPTING THE PROPOSED DESIGNS TO YOUR PROJECT

The objective of this section is to assist the developer in integrating the proposed barrier-free and adaptable housing requirements into his own project design.

The design features are examples of barrier-free and adaptable layouts which function well. Our intention is not to present them as being THE only solution possible. On the contrary, each developer wants to personalize his projects and contribute to creating the diversity and wide range of housing choices offered to Canadians. We believe that barrier-free and adaptable housing must also offer a variety of options in order to be compatible with the particular tastes, budgets and lifestyles of individuals. The designs presented are thus to be considered as references or examples only.

An integrated concept

The technical section of the document is divided into themes which make it possible to deal with each space and each layout in a clear and detailed manner.

In actual fact, however, the various functional areas and components of the building and of the dwelling unit are interconnected. The reader must make the connections between these in order to obtain an integrated concept for the whole project. Considerations regarding these connections are identified in each of the themes.

For example, the "bedroom" theme includes characteristics of the clothes closet, while the "corridor" theme presents certain elements associated with the linen closet. On the other hand, the clothes closet and the linen closet are dealt with in detail under the theme "storage space".

The objective of this document is not to offer an exhaustive catalogue of barrier-free and adaptable house and building models. What we wish to do is provide developers with the tools necessary to adjust their design. We have, therefore, chosen the "theme" approach while being aware of the effort that developers and designers must make to integrate the themes to form a whole.

How to use this document

The basic model

For each of the themes in the technical section (for example, the bathroom) we propose a basic model. The **basic model presents the minimum characteristics considered to provide a barrier-free and adaptable layout.**

This basic model must thus be used as a minimum standard and reference.

A developer who observes that the basic model (the minimum) offers a higher standard than that which he intends to execute, should decide whether he really wishes to provide barrier-free and adaptable units and, if so, whether certain other features of the project may be waived in order to incorporate the minimum requirements for access and adaptability.

On the other hand, for the developer who considers that the basic model is below the standard he intends to provide, we recommend that he ensure that all the characteristics set forth are effectively covered in his project. A vast bathroom with luxurious features may well not be barrier-free...

The other examples

Beside the basic model, other examples of layout variations are also proposed for most of the themes. **These examples also represent the minimum requirements, but in different contexts.**

Take the "bathroom" theme, for example. One of the examples describes the barrier-free and adaptability characteristics which are minimal for a bathroom with washer and dryer. Another example describes a bathroom with a bathtub, but also with a shower, an additional washbasin and a window. The accessory features are not required in a barrier-free and adaptable bathroom. However, if the developer intends to integrate these features into his project, the example indicates the characteristics required so that the layout, as a whole, remains barrier-free and adaptable.

The required characteristics: a marketing tool for the client groups

For each theme, the required characteristics are grouped around the major principles explained on page viii, thereby ensuring a good performance in terms of barrier-free access and adaptability.

In general, the five following groups are treated:

- Access and turning space
- Functional safety
- Ease of use
- Emergency Measures
- Adaptability

Grouping these various characteristics under a sub-heading allows a better understanding of the objectives sought and suggests to the developer a consumer-oriented *marketing* strategy to differentiate his projects from others.

For example, the basic model for the "bathroom" theme lists under the heading "functional safety" characteristics such as slip-resistant flooring, lighting, etc.

As previously mentioned, these groupings, as well as many of the characteristics found therein, were identified during the focus group discussions of consumers which were held by Canada Mortgage and Housing Corporation in major cities in Canada.[1]

They reflect the concerns of Canadians regarding the barrier-free design issue and may, therefore, become important elements of quality distinction and promotion for housing developers.

The guide and the regulations in force

This document is directly in line with the orientation of the recent design standards, such as the CSA Standard and the ADA regulation, to propose integrated design concepts which offer a higher performance in terms of barrier-free access.

This guide, therefore, goes beyond the actual code requirements presently in force in Canada.

However, the reader will notice that several elements described in the document already form part of the current practice in residential construction.

The document thereby elaborates on the construction requirements and shows how to appropriately integrate the design, the equipment and the products so as to maximize their barrier-free potential.

---

1 Focus Group Sessions to Examine Barrier-Free and Adaptable Housing Designs, Hickling, 1993

3.0 PERFORMANCE CRITERIA AND ARCHITECTURAL CHARACTERISTICS

Note:
The performance criteria and architectural characteristics outlined under the following themes comply with the National Building Code of Canada of 1990 as developed by the National Research Council of Canada. The requirements of Section 3.7 "Barrier-Free Design" are identified by a note at the bottom of the page.

However, given the wide range of provincial and municipal regulations regarding construction and accessibility, the responsibility for ensuring that the architectural characteristics listed comply with the regulations in force where individual projects are being built, is ultimately the designer's and the developer's.

The themes presented in this section are organized as follows:

MULTI-FAMILY RESIDENTIAL BUILDING

1. Access to multi-family buildings
2. Vestibule and entrance hall
3. Public corridors
4. Elevator
5. Public stairs
6. Fire safety measures
7. Garbage chute
8. Community room
9. Semi-public toilet
10. Laundry room
11. Common storage
12. Exterior pathways
13. Parking area for multi-family buildings

SMALL RESIDENTIAL BUILDING

14. Access to small residential buildings
15. Parking area for small residential buildings

DWELLING UNIT

16. Entry to dwelling unit
17. Circulation within dwelling unit
18. Kitchen
19. Bathroom
20. Bedroom
21. Living room
22. Balcony
23. Storage space
24. Laundry space

COMMON ELEMENTS

25. Doors and thresholds
26. Hardware
27. Electric switches and outlets
28. Lighting
29. Windows and glazed panels
30. Heating and air-conditioning
31. Paving and flooring

The themes regarding the dwelling unit apply to units in both multi-family buildings and small residential buildings (single-family, plexes).

The themes describing the common elements apply equally to the common spaces in multi-family and small residential buildings and to the individual dwelling units.

1. ACCESS TO MULTI-FAMILY BUILDINGS

GUIDELINES

The main entrance to a multi-family residential building must be accessible. It should communicate directly with a passenger loading area, close to a main street.

All other entrances to the building should also be accessible to enable all the residents to access the building by using the entry of their choice and to have the entrances useable as a means of evacuation.

The building must be sited in such a way as to allow for access pathways to the building that have the lowest possible slope. The ground floor level should be only slightly higher than the street level in order to allow for a pathway with a slope that does not exceed 1:20.

The site conditions or the project characteristics (dwelling units in semi-basement) may result in the slope of the access pathway being steeper than 1:20. These pathways should then be treated as access ramps.

In a multi-family building, the use of a vertical or inclined lift to compensate for a difference in level is not an acceptable solution.

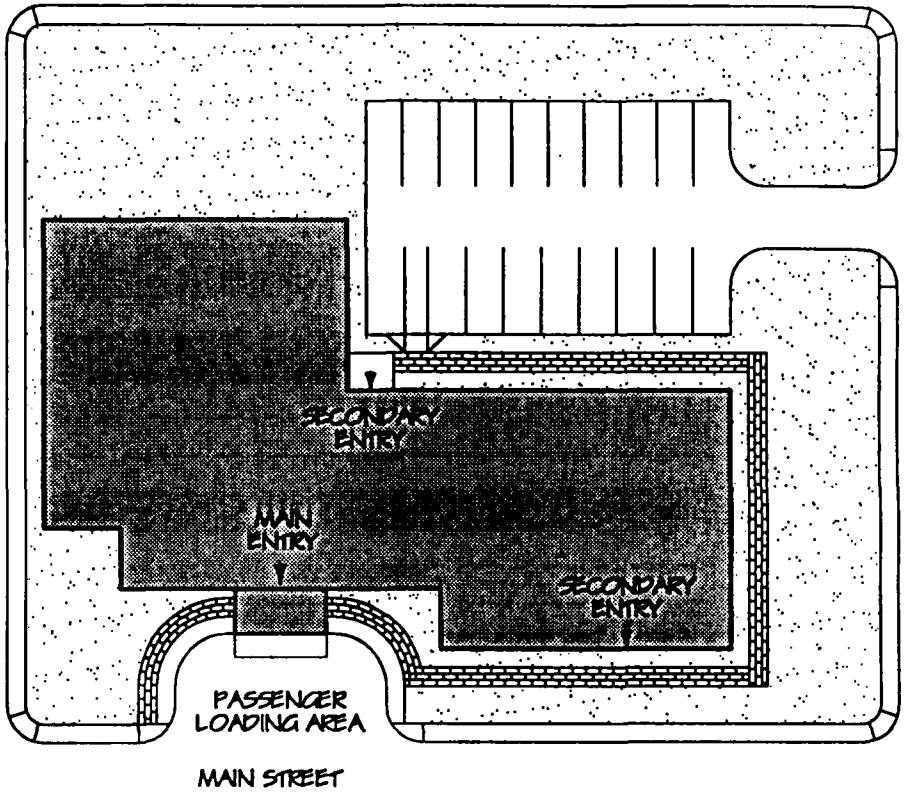

SITE LAYOUT

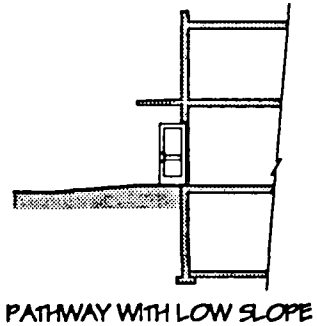

PATHWAY WITH LOW SLOPE
BASIC MODEL

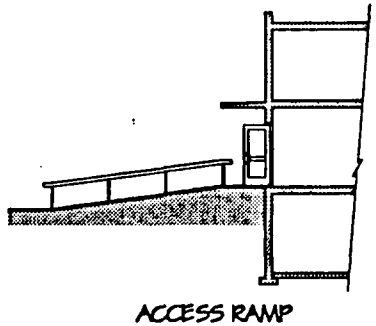

ACCESS RAMP
ALTERNATIVE

ACCESS TO THE BUILDING: BASIC MODEL
Performance criteria and characteristics

Building entry on grade with a low-sloping pathway (less than 1:20)

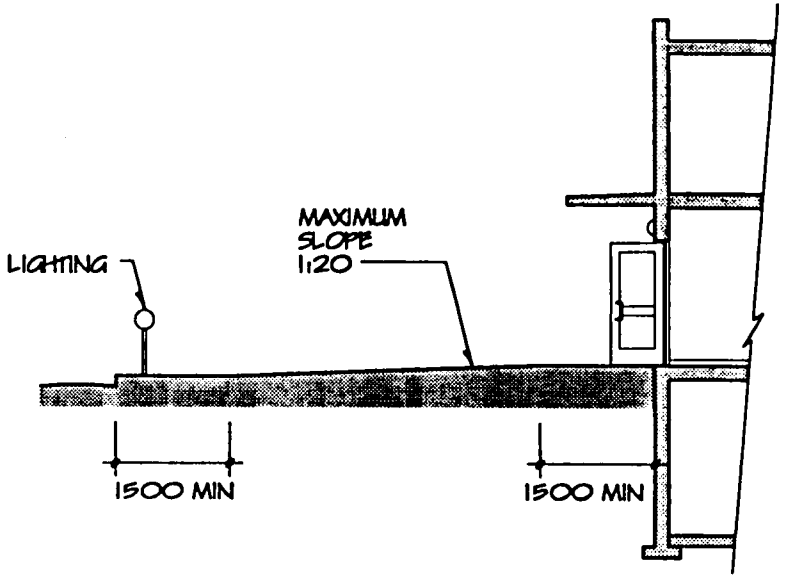

☐ **Access and turning space**

1. continous pathway, without steps and with a maximum slope of 1:20
2. maximum cross slope of 1:50
3. minimum width of pathway 1100 mm[1]
4. turning space 1500 mm in diameter, outside of the door swing

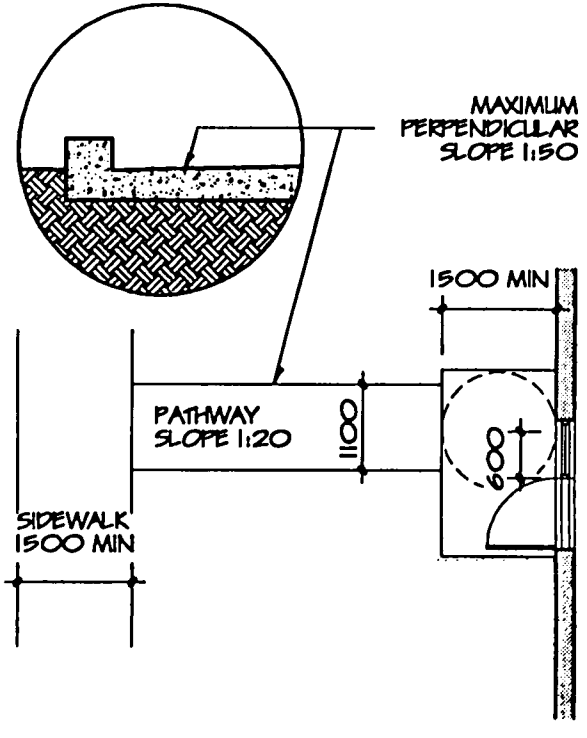

☐ **Functional safety**

5. slip-resistant, stable, firm and uniform surface (without hollows or projections)
6. lighting 100 lux along pathways
7. lighting 200 lux at entry

☐ **Ease of use**

8. building number well lighted, in contrasting colour, and large enough to be easily visible (200 mm minimum height)

[1] CNB 1990

OTHER EXAMPLES OF ACCESS TO THE BUILDING

The following examples illustrate alternative access solutions depending on the building's configuration, the topography of the site and the site layout.

Pathways with a low slope (less than 1:20) integrated into these designs must respect the performance criteria and characteristics listed in the basic model.

☐ Access ramp: entry with a pathway slope in excess of 1:20

In situations where the approach has a slope in excess of 1:20, it must be designed as an access ramp.

All access ramps must be complemented by stairs that comply with the performance criteria and characteristics required for public stairs.

☐ **Access and turning space**

9. maximum slope of 1:12[1]
10. clear width of ramp 900 mm
11. maximum length of ramp between landings: 9 meters[1]
12. intermediate landing 1200 mm long where there is no change of direction[1] and 1500 mm long where there is a change of direction
13. upper and lower landings 1500 mm x 1500 mm minimum[1]

[1] NBC 1990

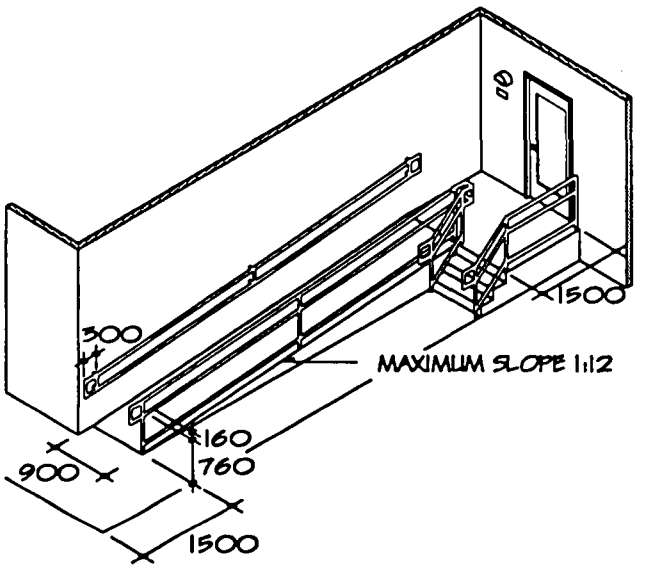

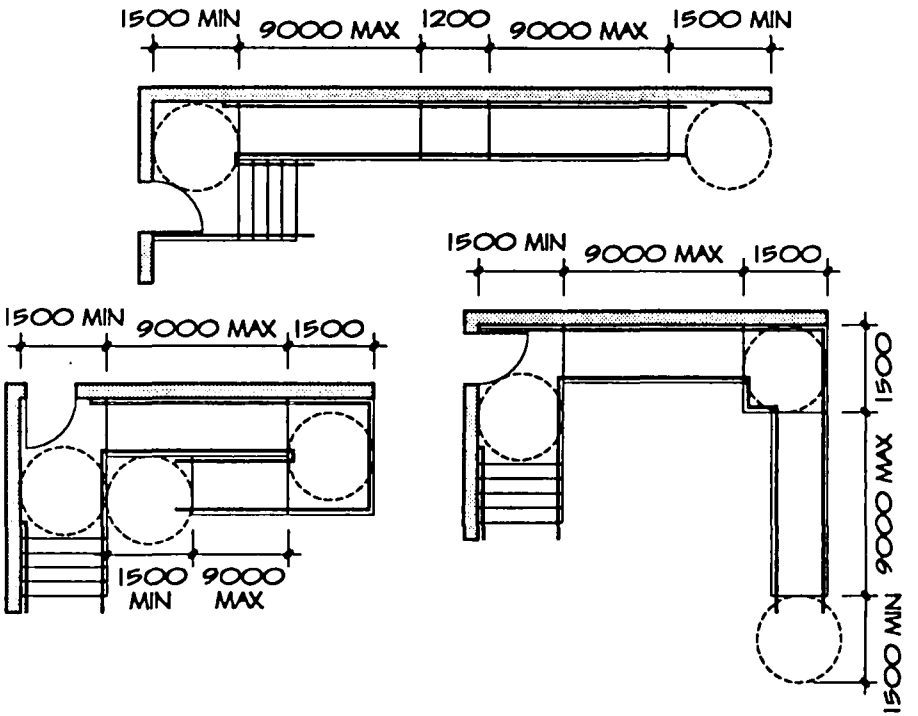

☐ Functional safety

14. slip-resistant surface for ramp and landings
15. upstanding edge 100 mm high (or alternatively a rail 100 mm high) on each side of the ramp
16. handrails installed on each side of the ramp
17. continuous handrails on landings[1]
18. ends of handrails curved either downward or toward the wall
19. general lighting 200 lux

☐ Easy of use

20. handrails 30-40 mm diameter with a shape and sufficient clearance for a good grip
21. handrails extending horizontally 300 mm beyond the inclined surface[1]
22. handrails installed at 760 mm and 920 mm from ramp surface

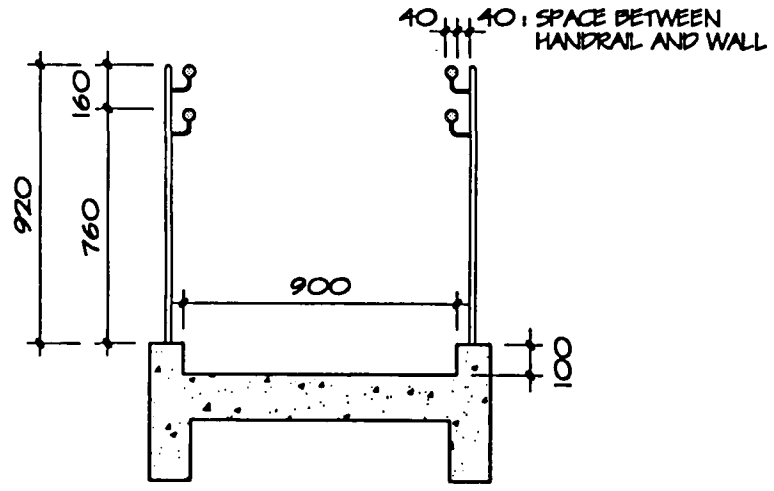

[1] NBC 1990

☐ Entry with passenger loading area

Providing a sheltered passenger loading area assures greater comfort for the residents.

A loading area in front of the main entrance should be provided on site.

☐ Access and turning space

22. loading area measuring 3000 mm x 6000 mm adjacent to the vehicular access
23. minimum vertical clearance of 2750 mm
24. no change in level between the landing in front of the entry door and the loading area
25. where there is a change in level between the vehicular access and the pathway, sidewalk or loading area, install inclined curb cuts

☐ Ease of use

26. where the loading area is located near the building, install a canopy above it

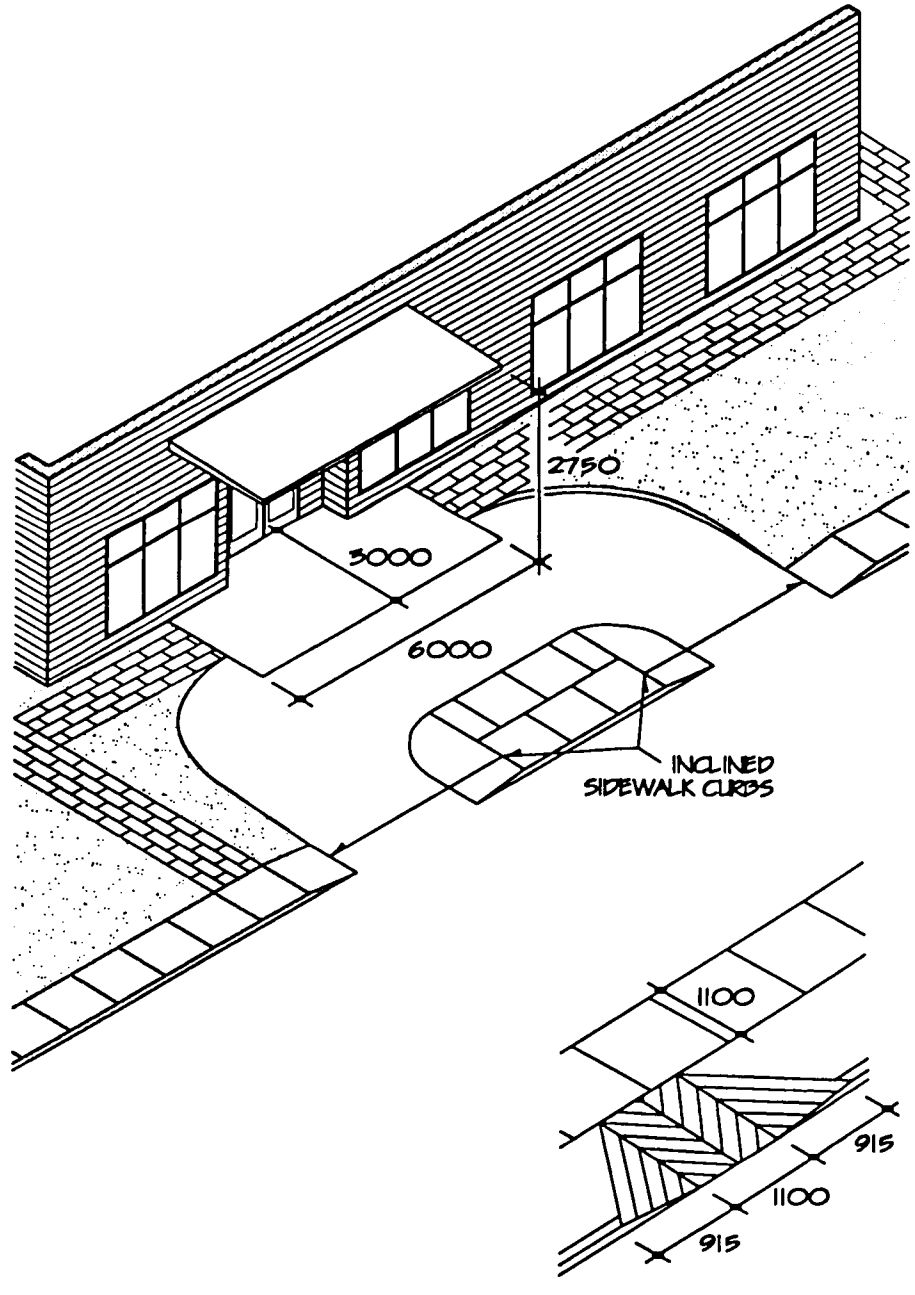

2. VESTIBULE AND ENTRANCE HALL IN MULTI-FAMILY BUILDINGS

GUIDELINES

The vestibule and the entrance hall are transition areas between the exterior and interior spaces of the building and therefore offer natural areas for residents of the building to meet.

The dimensions of the vestibule and entrance hall must be sufficient to allow access to all the residents. The equipment which is found there (intercom, letter boxes) must be easy to access and to use.

Where the building has an elevator, it must be visible or clearly indicated from the entrance hall.

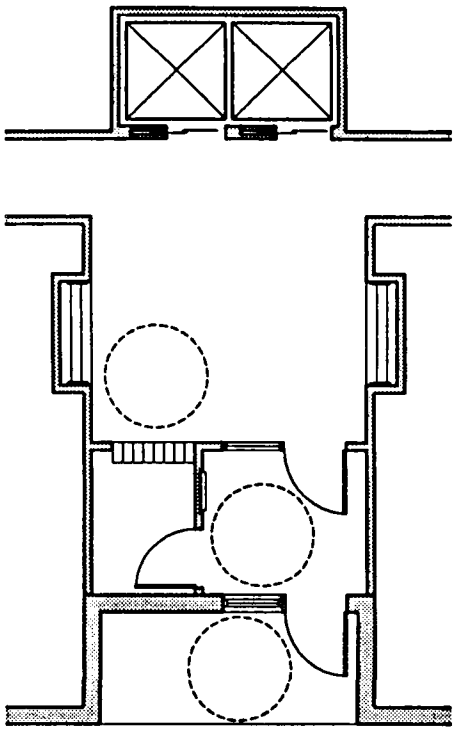

VESTIBULE AND HALL
BASIC MODEL

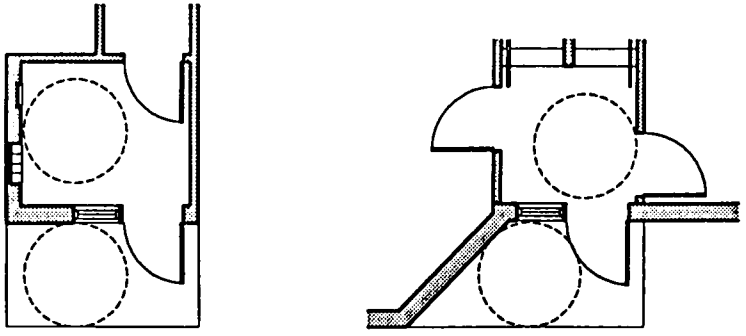

VESTIBULE WITHOUT HALL

HALL WITHOUT VESTIBULE

ALTERNATIVES

VESTIBULE AND ENTRANCE HALL: BASIC MODEL

Performance criteria and characteristics

☐ Access and turning space

1. door width minimum 865 mm with glazed sections located no higher than 1050 mm from floor; door swing not to encroach upon the turning space
2. bevelled threshold 13 mm maximum[1]
3. turning space 1500 mm diameter in the vestibule, in front of the intercom
4. turning space 1500 mm diameter in front of the letter boxes
5. wall clearance 600 mm beside the handle edge of the door, on the pull side
6. wall clearance 300 mm beside the handle edge of the door, on the push side
7. clearance 300 mm between any equipment and the adjacent wall

☐ Functional safety

8. slip-resistant floor
9. general lighting 100 lux
10. lighting 200 lux over intercom and letter boxes

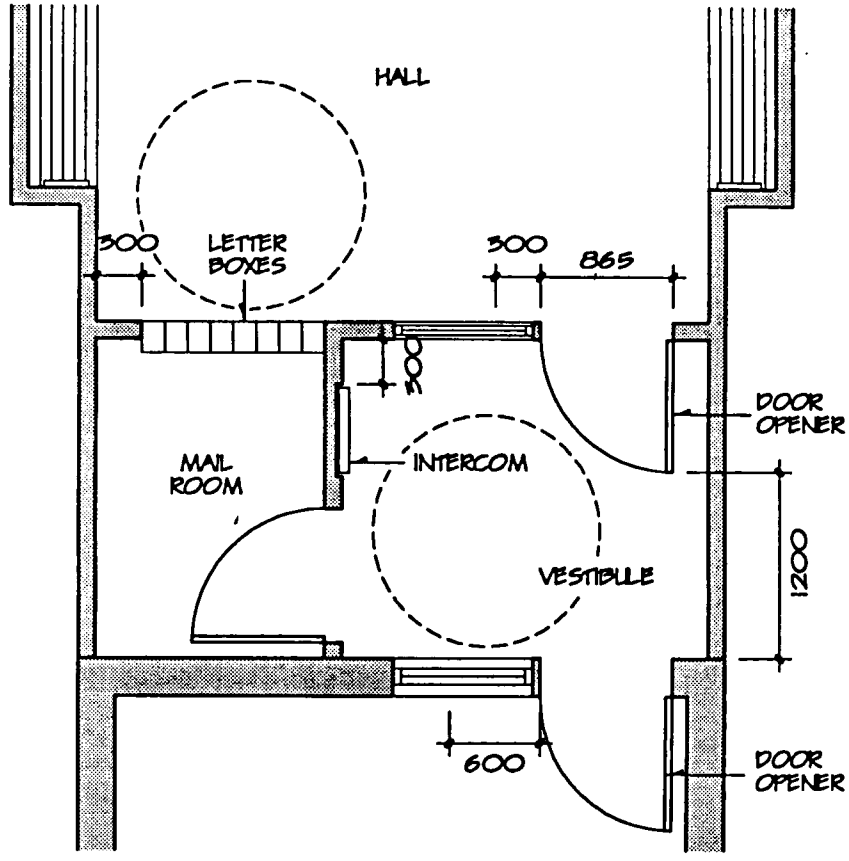

[1] NBC 1990

☐ Ease of use

11. Mail room door:
    a) lever handle

12. Doors in vestibule and entrance hall:
    a) stationary D-shaped handle
    b) automatic door-opening device
    c) lever handle

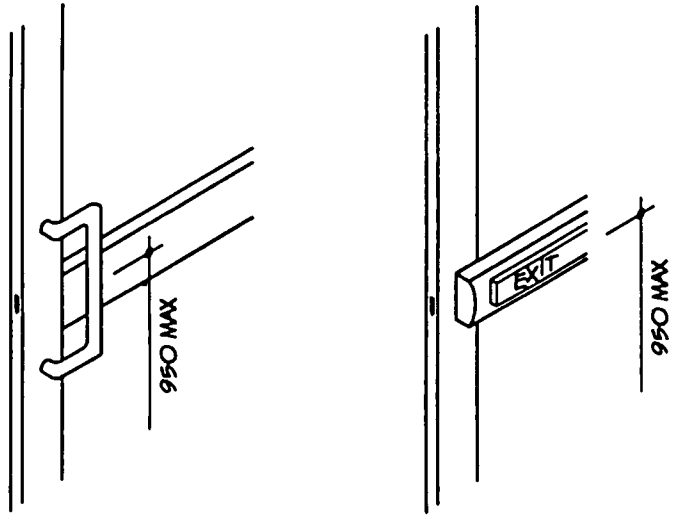

13. Intercom:
    a) control buttons between 1050 and 1400 mm from floor
    b) signs and indicators in contrasting colour, characters minimum 16 mm high, projecting 0.75 mm minimum
    c) intercom connected to telephone in dwelling units

14. Scraping floor mat, when provided:
    a) same level as adjacent floor
    b) laths spaced at 13 mm maximum, perpendicular to the circulation

15. Letter boxes:
    a) located between 900 and 1400 mm from floor level
    b) two of the boxes with a minimum height of 300 mm and a minimum depth of 250 mm (for Braille publications)
    c) marked with arabic numerals at least 16 mm high and projecting 0.75 mm minimum

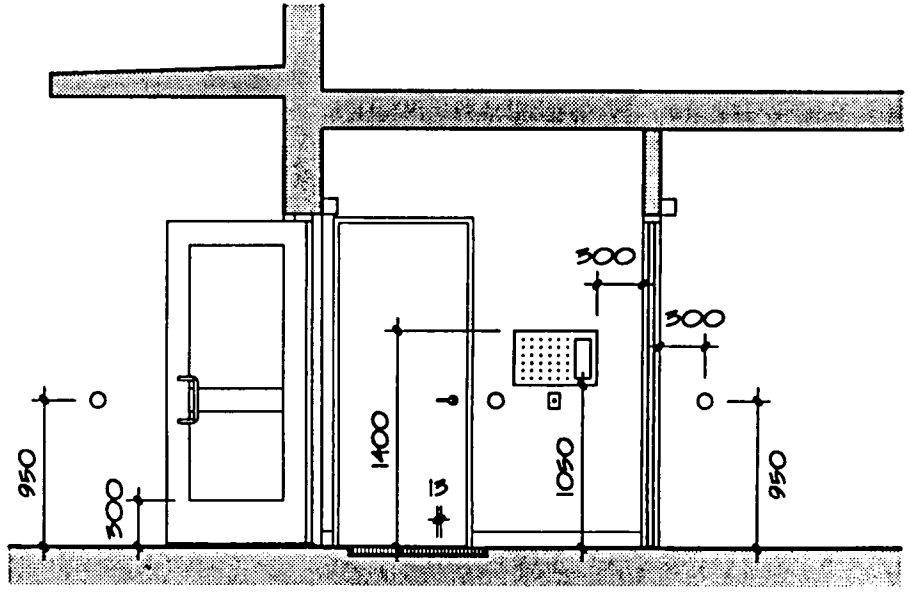

OTHER EXAMPLES OF VESTIBULE AND ENTRANCE HALL

The following variations are examples of vestibule and entrance hall layouts which correspond to different design contexts, depending on the type of housing in which they are found. The performance criteria and the characteristics of the basic model apply to these variations.

☐ Vestibule without entrance hall

Usually buildings incorporating this type of entry contain a limited number of dwelling units.

The letter boxes are located in the vestibule. Residents must be able to reach and use the equipment while remaining outside the range of the door swing. A 1500 mm diameter turning space is required in front of each piece of equipment.

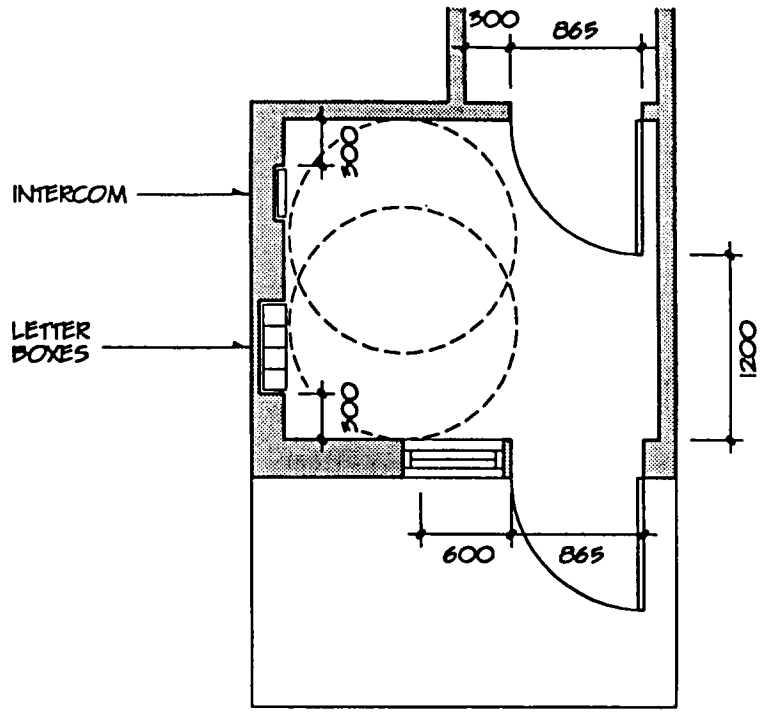

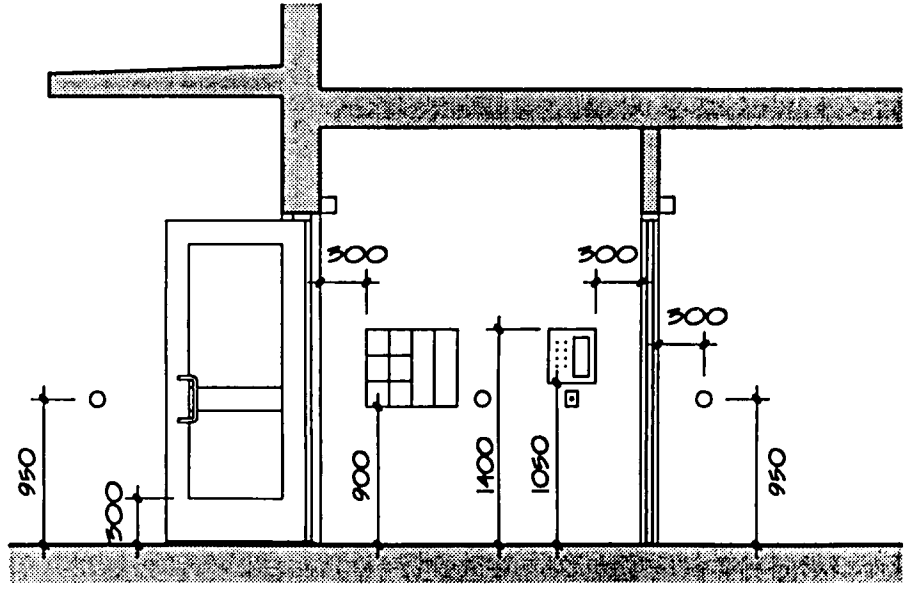

☐ Entry without vestibule

Usually buildings incorporating this type of entry contain one or two housing units per floor.

The intercom and/or the door bell are located outside the building. The letter boxes can be located outside or on the inside (on the lower landing of the public stairway).

A turning space 1500 mm diameter beyond the range of the door swing must be located on the outside, in front of the door bell and/or intercom, as well as on the inside in front of the letter boxes.

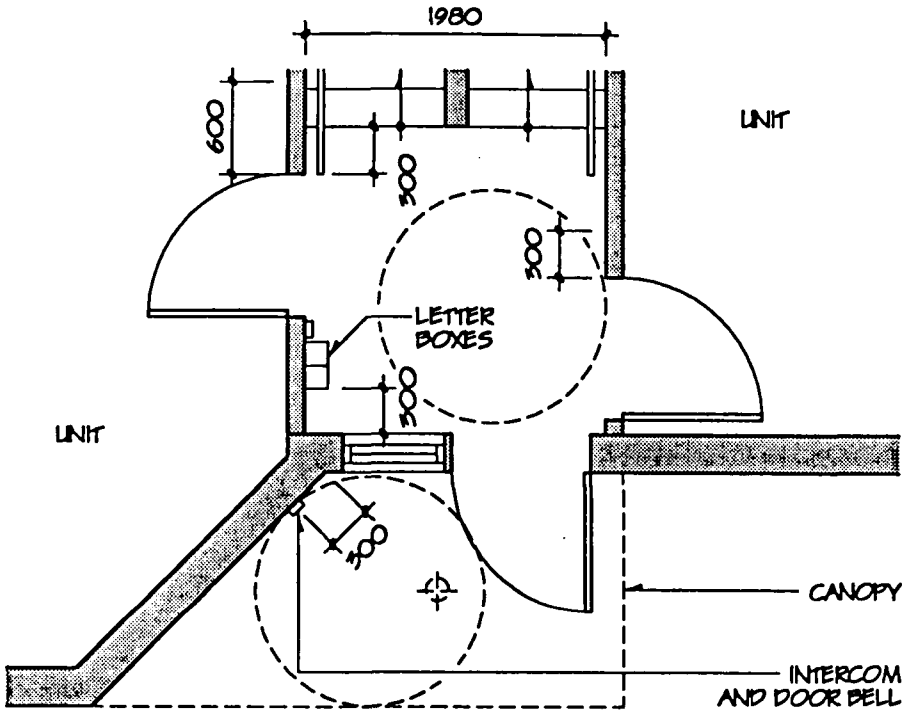

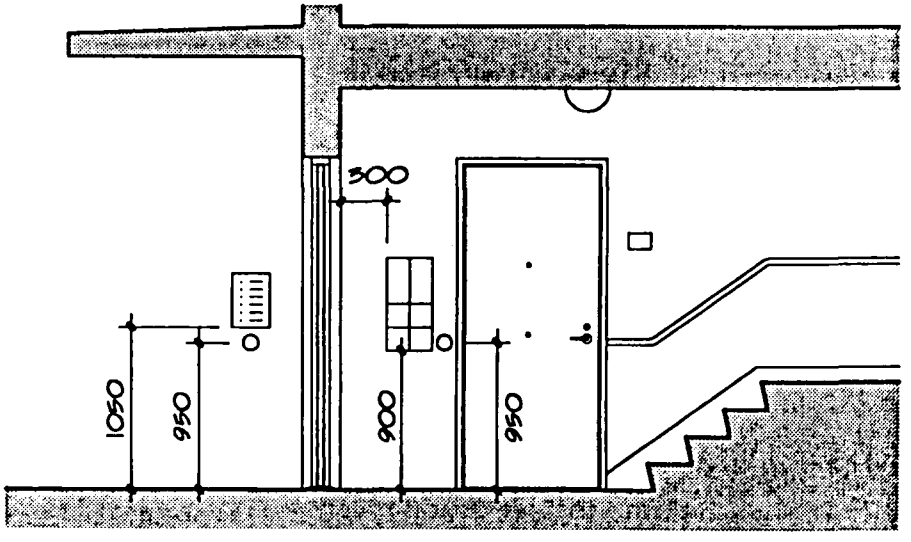

WALK-UP BUILDING WITH TWO ACCESSIBLE UNITS

☐ Entrance hall with bench

Seating in the entrance hall promotes social mixing among the residents, and provides for waiting and rest areas.

A turning space 1500 mm diameter should be provided in front of the benches.

The seat should be 450 mm from floor level with a minimum depth of 450 mm.

Benches should be equipped with arm rests.

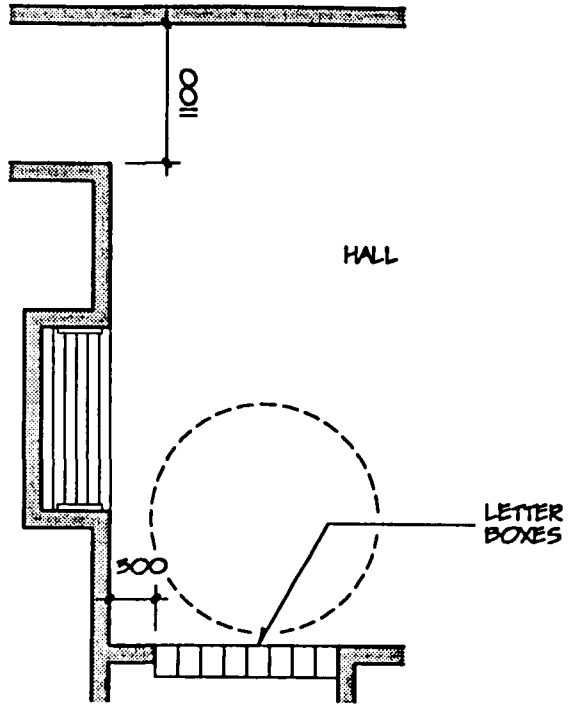

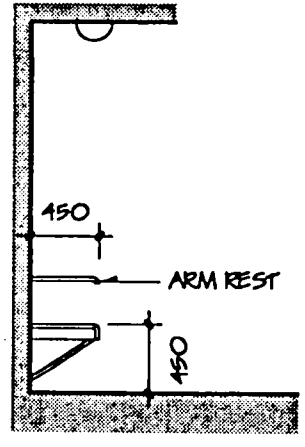

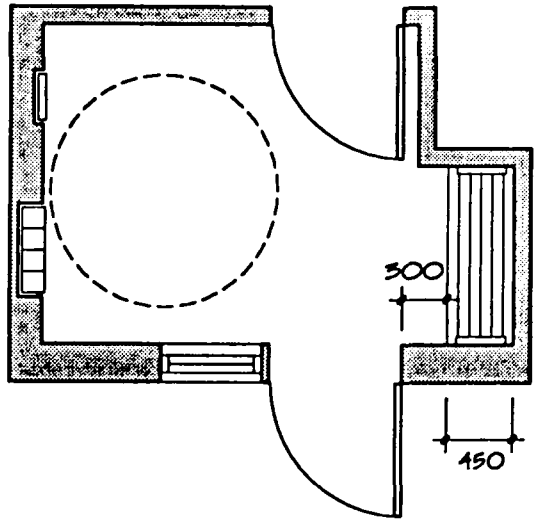

3. PUBLIC CORRIDORS

In multi-family housing, public corridors provide access from the entrance to the units, common spaces, elevators and stairs, and therefore represent an important circulation link.

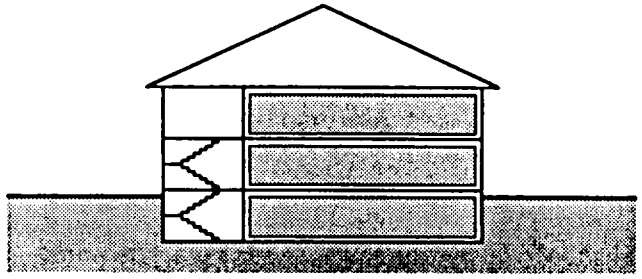

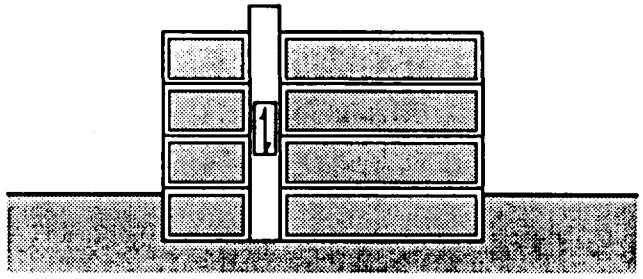

GUIDELINES

All public corridors in multi-family buildings, including those located on floors not served by elevators, **must comply with the following performance criteria and characteristics to make them accessible and adaptable.**

Accessible public corridors must be wide enough to allow for two persons to pass each other. This width requirement can be met by widening the corridors at doorways only.

PUBLIC CORRIDOR
Performance criteria and characteristics

☐ Access and turning space

1. widening of corridor to allow for a clearance of 1500 mm x 1500 mm in front of doors to the units, to the common spaces, at the end of the corridors and in front of elevators.

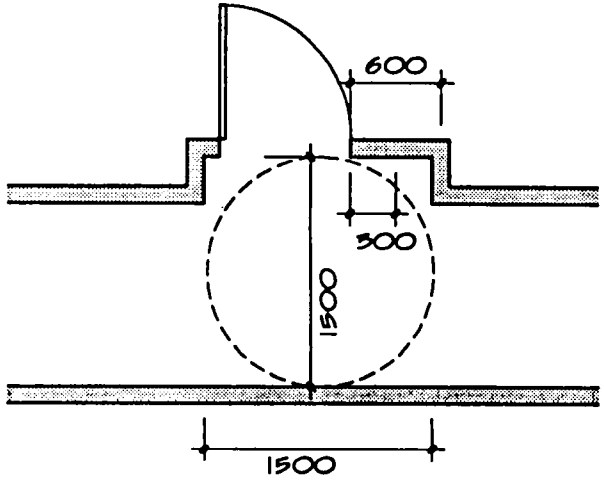

☐ Functional safety

2. corridor free of all obstacles for a vertical clearance of 1980 mm
3. projections of 100 mm are allowed in the corridor; these projections may exceed 100 mm where the lower edge of the projecting object is located less than 680 mm from floor level[1]
4. general lighting 100 lux
5. directed lighting 150 lux over unit doors, in the common spaces, in stairs and at elevators

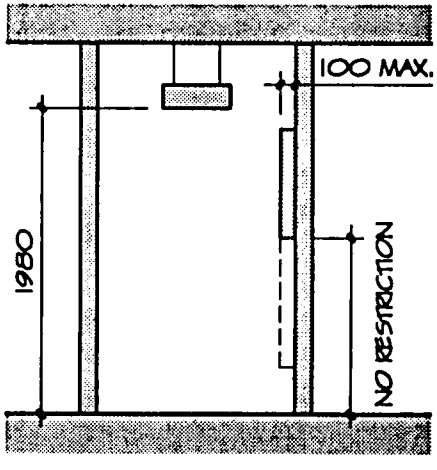

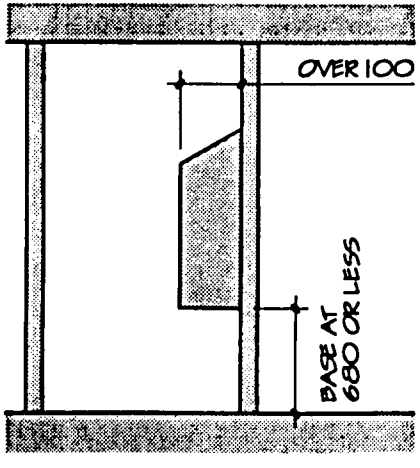

☐ Ease of use

6. signage (unit number, name of common space) placed on the wall, at the handle edge of door, 1500 mm from floor level
7. projecting letters, 50 mm high, in a light colour on a dark background

[1] NBC 1990

☐ Adaptability

If future installation of handrails is planned:

8. the width required for the corridor must be increased to compensate for the horizontal projection of the handrails
9. for metal frame walls, wall reinforcing must be provided to ensure that the handrails can be securily anchored on each side

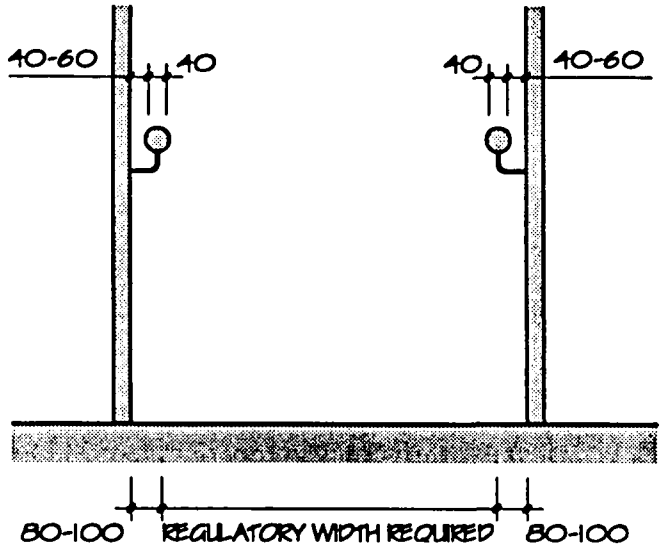

4. ELEVATOR

GUIDELINES

The elevator is a feature which allows for barrier-free access to all floors of the building.

All elevators in a residential building must respect the following performance criteria and characteristics.

It is desirable that one elevator in a building meets the requirements of a fire fighters' elevator and can accommodate a stretcher.

Performance criteria and characteristics

☐ **Access and turning space**

1. at each floor in front of the elevator a 1500 mm diameter turning space
2. inside the elevator, a minimum 1500 mm turning space
3. door clearance 910 mm[1]
4. automatic leveling device with a range of ± 13 mm[1]

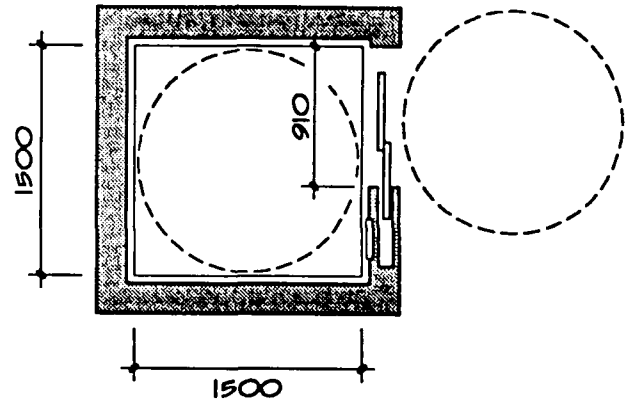

BASIC MODEL

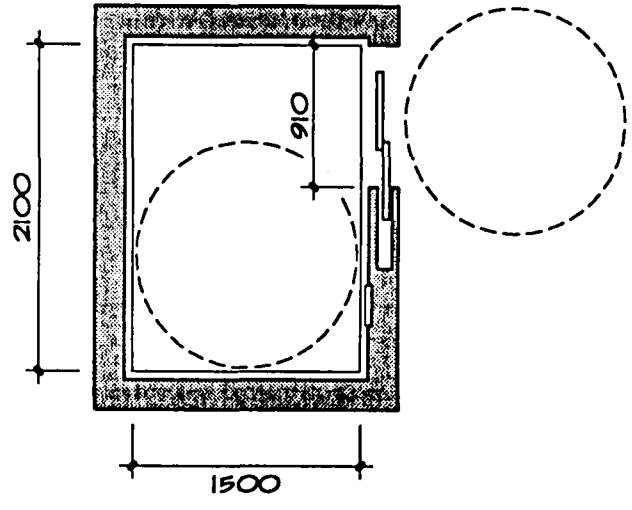

OTHER EXAMPLE

[1] CSA-B44-M90 Appendix E - Elevator Requirements for the Handicapped

☐ Functional safety

5. device for stopping and reopening doors, which does not require contact, and which can detect an obstruction located between 125 and 735 mm from floor level
6. handrail providing a wall clearance and shape appropriate for a good grip, at 800 mm from floor level, on the lateral walls and at the back of the cabin
7. general lighting 200 lux

☐ Emergency measures

8. telephone at 1200 mm maximum from floor level, equipped with a cord 900 mm[1] long minimum
9. telephone compartment identified by an international pictogram 38 mm high, projecting 0.75 mm[1]
10. D-shaped handle on telephone compartment, 100 mm long
11. telephone receiver with volume control

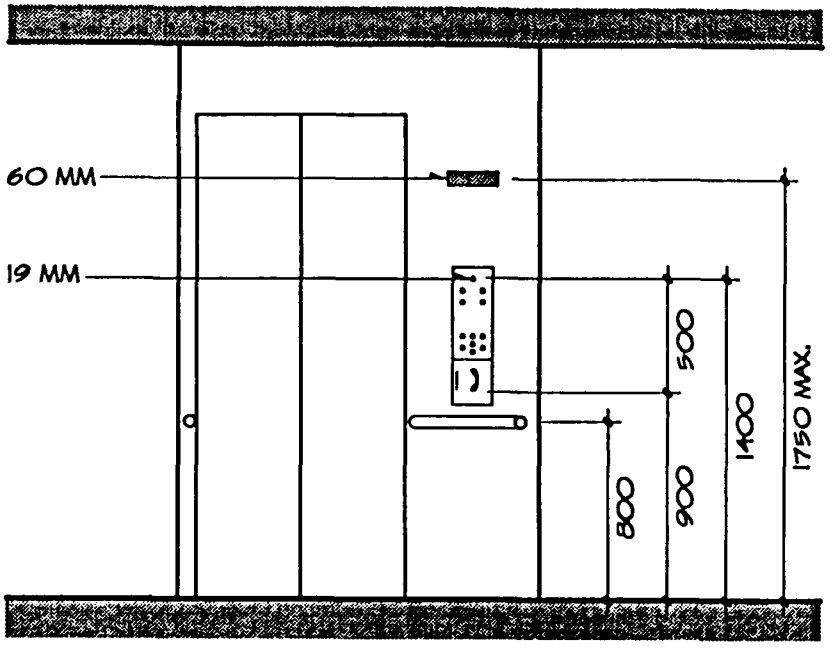

[1] CSA-B44-M90 Appendix E

☐ **Ease of use**

12. door remains open at least 5 seconds and closes slowly

13. control buttons (general):
    a) diameter minimum 19 mm[1]
    b) when pushed, buttons should be recessed 10 mm maximum[1]
    c) not heat sensitive
    d) to the left of the buttons, arabic numerals or pictogram 16 mm minimum high, projecting a minimum of 0.75 mm[1]
    e) braille characters under the arabic numerals or pictograms

14. in the elevator cabin:
    a) control buttons at 900-1400 mm from floor level[1]
    b) door and emergency controls located at the bottom of the panel[1], in contrasting colour
    c) vocal synthesizer announcing floor arrivals
    d) lights, indicating the direction and location of the cabin, 60 mm high, at 1750 mm maximum from floor level

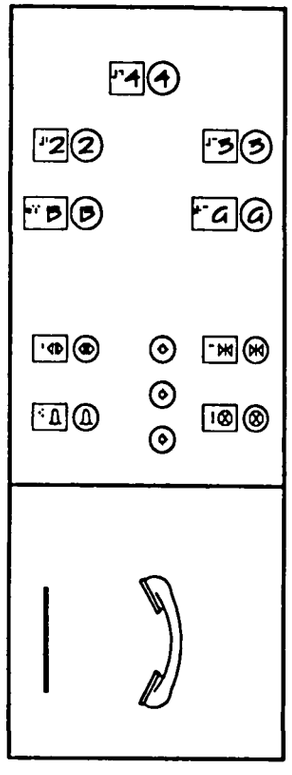

[1] CSA-B44-M90 Appendix E

7. GARBAGE CHUTE

The fire safety requirements for garbage chutes often make it difficult for persons with physical limitations to use the equipment. Management should therefore provide alternative arrangements for taking out the garbage for persons who have major difficulties using the chute.

GUIDELINES

All garbage chutes in residential buildings, including those which are located on floors not served by an elevator, should offer barrier-free performance criteria and characteristics.

Access to garbage storage areas and to receptacles such as those used for recycling, should comply with the requirements for access to the garbage chute.

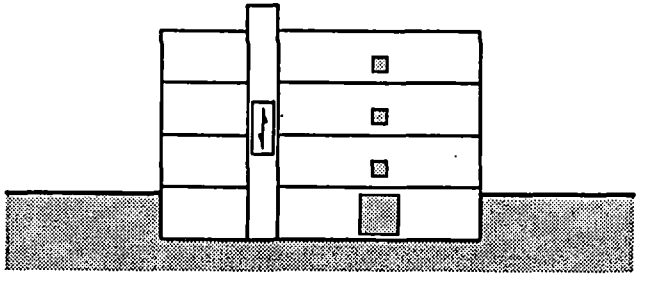

GARBAGE CHUTE
Performance criteria and characteristics

A safe and barrier-free garbage chute allows all persons to have frontal access to the hatch. The user should be able to manipulate the hatch while holding the door to the garbage compartment open, in order to be able to back out of it when finished.

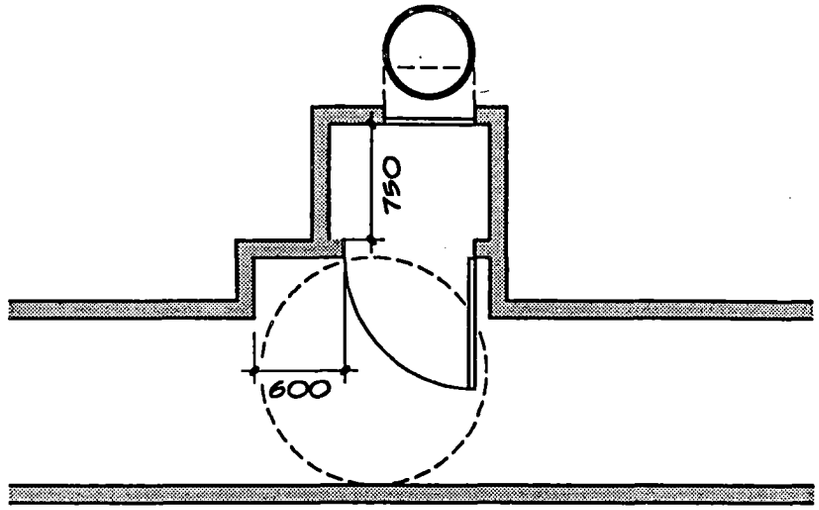

☐ **Access and turning space**

1. depth of garbage chute compartment 750 mm
2. door 865 mm wide, swinging into the corridor
3. bevelled threshold 13 mm maximum
4. wall clearance 600 mm in the corridor at the handle edge of the door
5. turning space 1500 mm diameter in the corridor

☐ **Functional safety**

6. lighting 150 lux
7. light turns on automatically when door is opened

☐ **Ease of use**

8. door opener with light pressure
9. lever handle
10. lower part of the hatch at 700 mm from floor level
11. hatch handle at 1050 mm from floor level
12. where provided, recycling box with opening mechanism at 1050 mm maximum from floor level

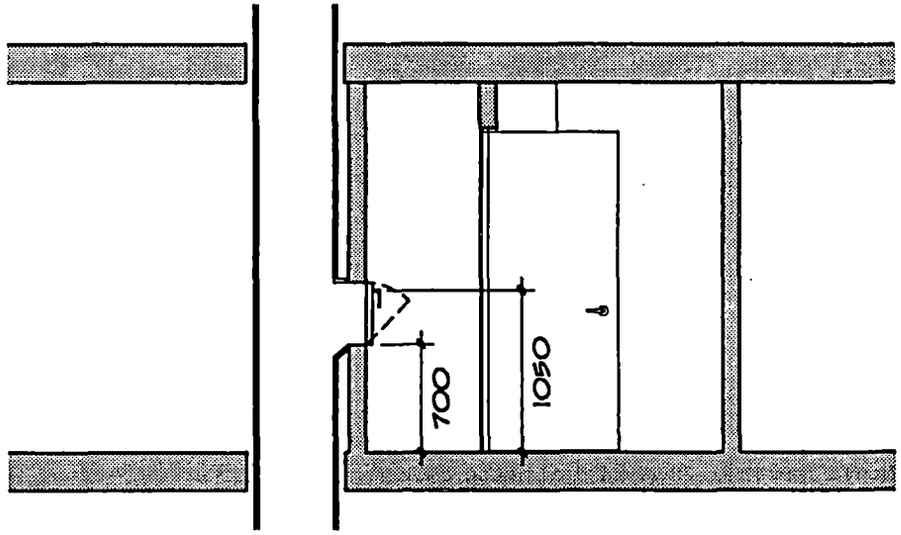

COMMUNITY ROOM
Performance criteria and characteristics

☐ Access and turning space

1. doors 865 mm wide
2. bevelled threshold, 13 mm maximum
3. no change of level within the community room

☐ Functional safety

4. door with glazed section whose lower edge is at a maximum 1050 mm from floor level
5. general lighting 100 lux
6. where direct access to the outside area is provided, exterior lighting 150 lux located beside the door

☐ Ease of use

7. lever door handles
8. locks easy to manipulate
9. window sills 750 mm maximum from floor level
10. window opening handle easy to manipulate
11. light switch 1050 mm from floor level
12. wall thermostat 1200 mm from floor level
13. electric outlets 450 mm from floor level

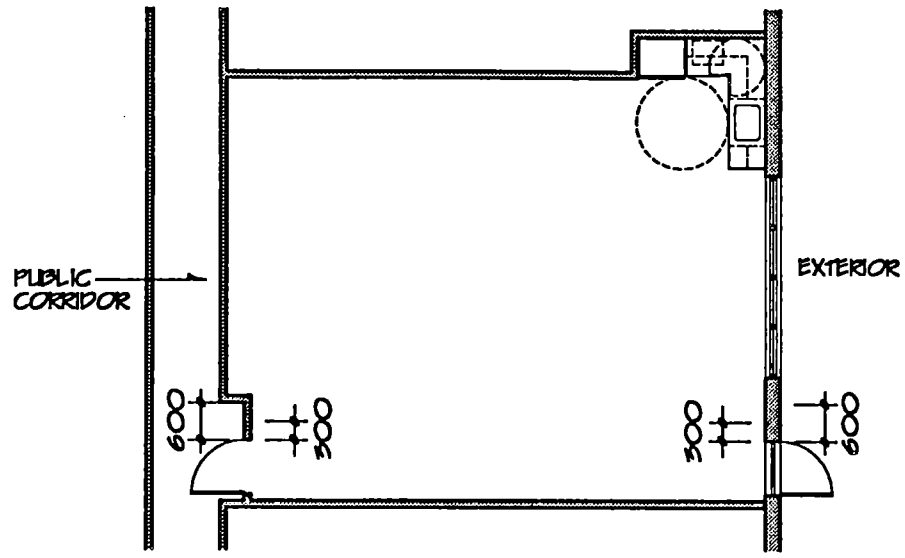

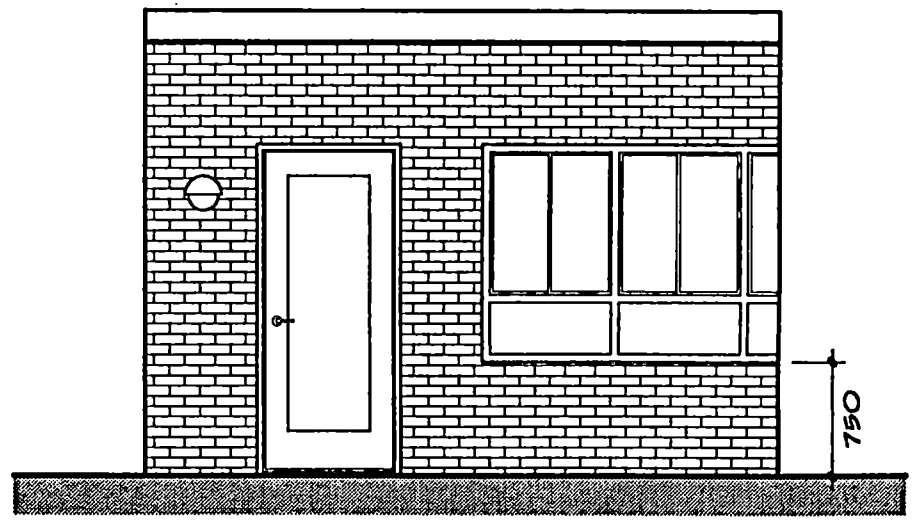

☐ Adaptability

14. for a door leading to the public corridor and for a door leading to the exterior space, provide an electric outlet above the doors on the interior side of the community room, for the possible installation of automatic door-opening devices

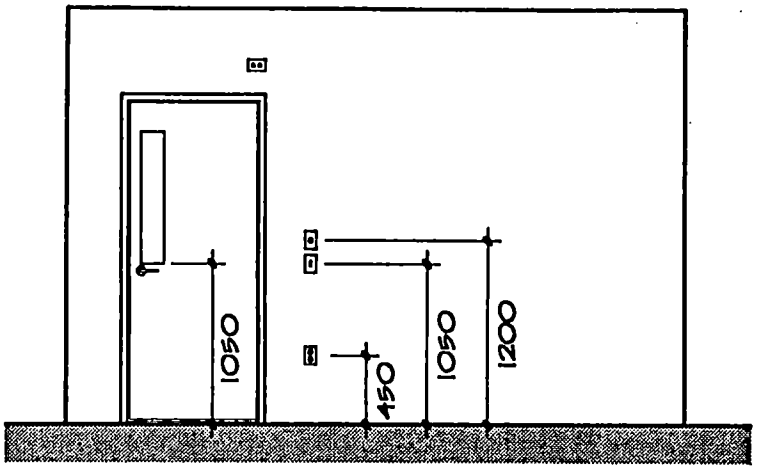

COMMUNITY KITCHENETTE
Performance criteria and characteristics

An accessible kitchenette requires sufficient turning space to manoeuver adequately in front of the counters, storage and appliances.

Strategic layout of the furnishings and appliances reduces movement and facilitates the activities. An L-shaped layout meets these conditions by offering a continuous work surface between the main work areas.

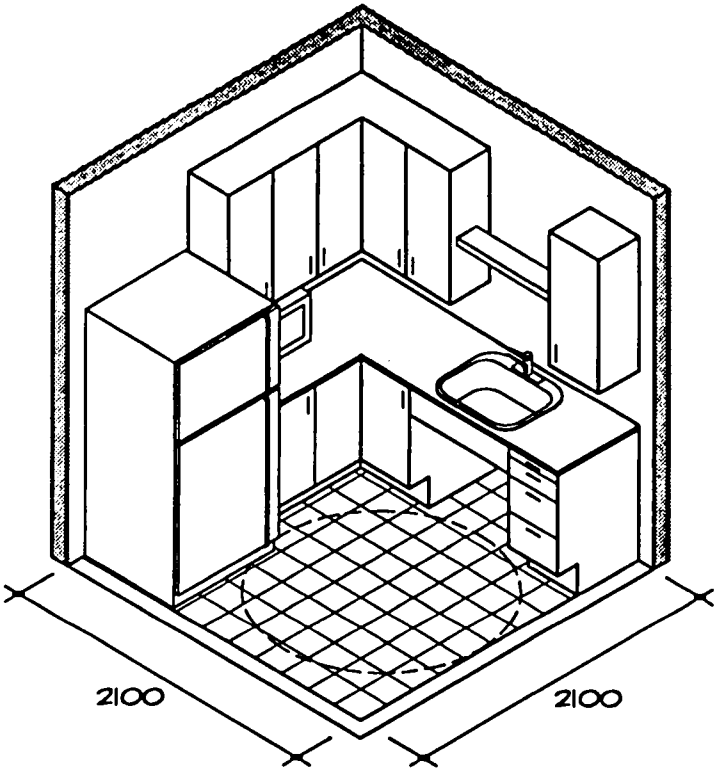

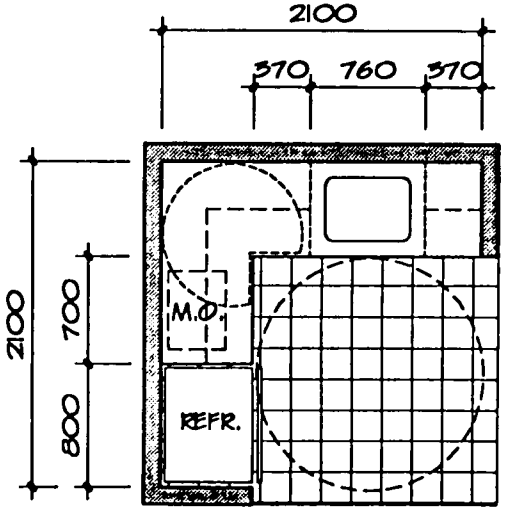

☐ Access and turning space

15. no thresholds
16. turning space 1500 mm diameter in front of counters, storage and appliances
17. clearance under sink 680 mm high and 760 mm wide
18. toe recess 180 mm high and 150 mm deep

☐ Functional safety

19. sink with offset drain and insulated trap, located at the back, parallel to the wall
20. continuous work surface between cook top and sink, permitting sliding utensils from one to the other
21. general lighting 200 lux

22. directed lighting 250-500 lux at the sink, cooking elements and work surface (light fixture under the upper cabinets)

☐ **Emergency measures**

23. portable extinguisher

☐ **Ease of use**

24. counter height at 880 mm from floor level (instead of 915 mm) to meet the needs of children as well as of persons working in a seated or a standing position
25. upper kitchen cabinets at 360 mm above the counter
26. hinges opening 180° for lower cabinet doors
27. D-shaped handles on cabinet doors and drawers
28. fully extensible sliding drawers
29. rotating storage shelves (lazy Susan) in corner cabinet
30. lever faucet at sink
31. light switch at 1050 mm from floor level
32. electric wall outlets above counter at 1050 mm from floor level

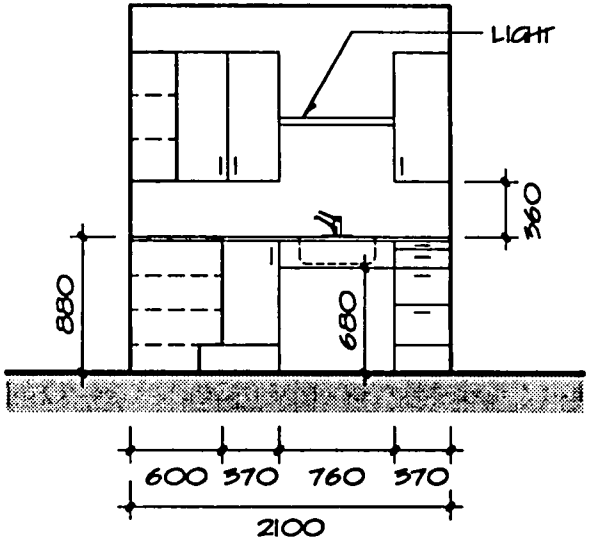

ANOTHER EXAMPLE OF COMMUNITY KITCHENETTE

☐ In-line kitchenette

The in-line kitchenette provides the same performance in terms of access as the L-shaped kitchenette. It allows manoeuvering in front of appliances, work surfaces and storage.

However, it is usually found in a situation where the available space for the kitchenette is limited.

The 1500 mm diameter turning space in front of the counters and appliances is thus shared between the kitchenette and the community room.

In order to allow easy access to the storage and appliances located at the ends, the doors must open fully to allow access along the whole length of the kitchenette.

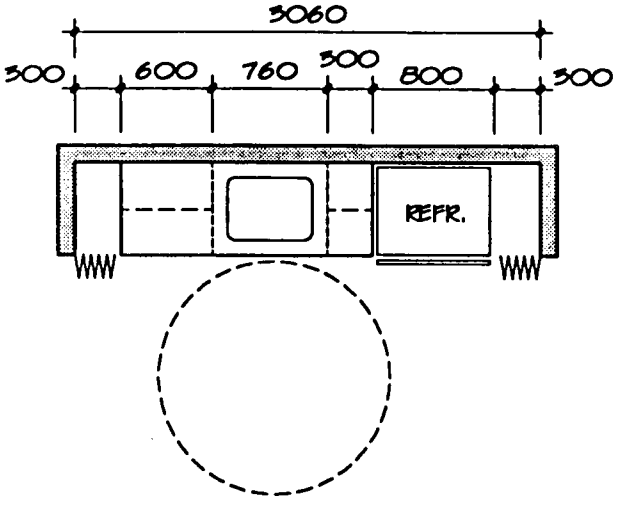

9. SEMI-PUBLIC TOILET

GUIDELINES

In residential buildings without elevators, the semi-public toilet should be **located on the ground floor or on the main entry level.**

The semi-public toilet is used by numerous residents with varied needs. Thus, it must be designed to meet these needs.

An accessible semi-public toilet must offer adequate turning space to provide access to the various facilities found there.

BASIC MODEL
Performance criteria and characteristics

☐ **Access and turning space**

1. door 865 mm wide, door swing not encroaching on turning space
2. bevelled threshold 13 mm maximum
3. turning space 1500 mm diameter
4. clearance under washbasin 680 mm high and 760 mm wide

LOCATION

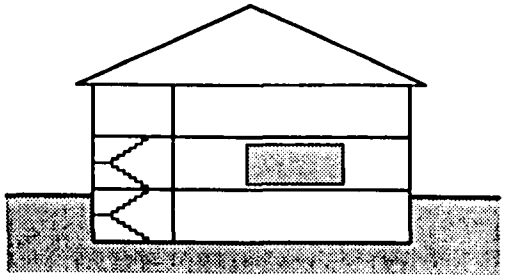

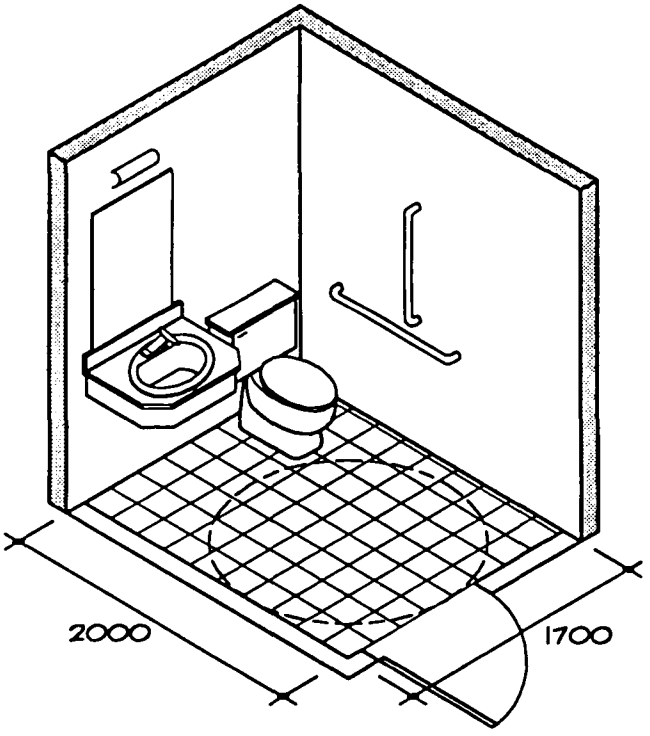

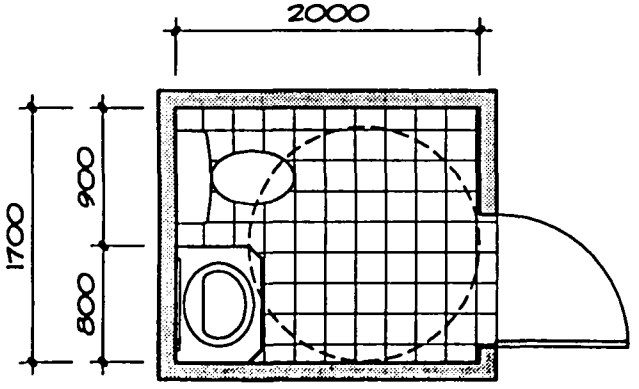

☐ Functional safety

5. slip-resistant floor
6. washbasin with offset drain and insulated trap located at the back, parallel to the wall
7. grab bar 40 mm diameter, with rough gripping surface, 900 mm[1] long, placed horizontally on the lateral wall of the toilet, 300 mm from the wall corner, at a height of 750 mm from floor level
8. grab bar 40 mm diameter, with rough gripping surface, 750 mm long, placed vertically on the lateral wall of the toilet, 900 mm from the wall corner, above the horizontal bar
9. lighting 200 lux

☐ Ease of use

10. lever door handle with lock that can be unlocked from the outside[1]
11. on the inside of the door, a pull handle[1] 140 mm long minimum, the center of which is between 200 mm and 300 mm from the hinge edge of the door, 950 mm from floor level
12. counter at 865 mm from floor level
13. elongated toilet bowl 400 mm high, with its axis 460 mm[1] from the lateral wall
14. lever faucet on washbasin[1]
15. mirror 600 x 900 mm, 920 mm from floor level
16. coat hook[1] at 1200 mm from floor level
17. accessories (towel, soap distributor, waste paper basket, etc.) at 1050 mm maximum from floor level
18. light switch at 1050 mm from floor level

[1] NBC 1990

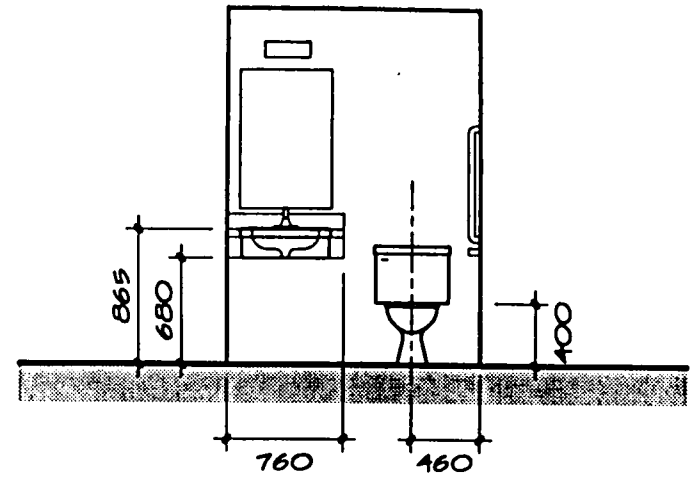

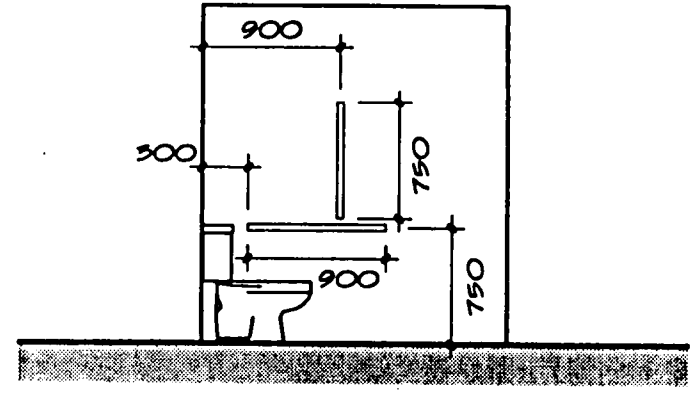

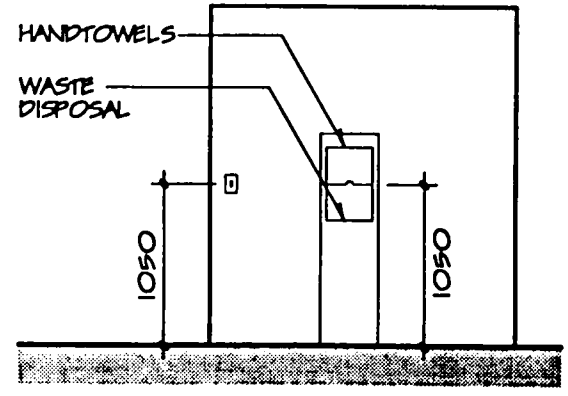

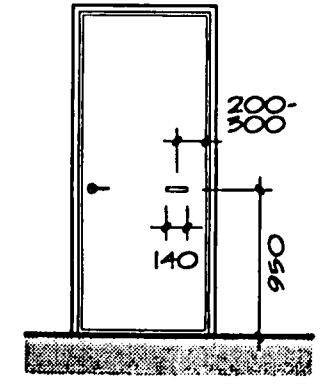

ANOTHER EXAMPLE OF SEMI-PUBLIC TOILET

☐ With lateral clearance beside the toilet

Another layout for a semi-public toilet provides a 760 mm wide space on one side of the toilet.

As with the proposed basic model, this alternative makes it possible to meet adequately the needs of a wide range of users.

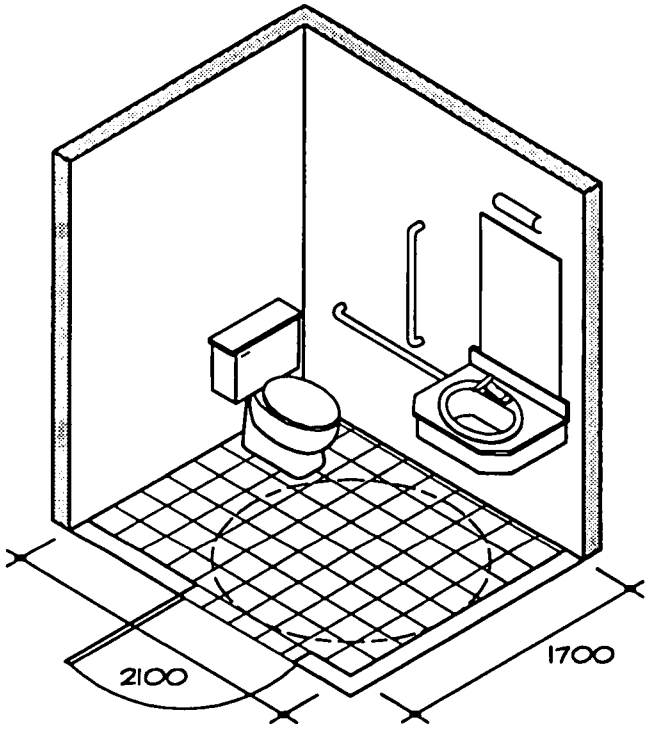

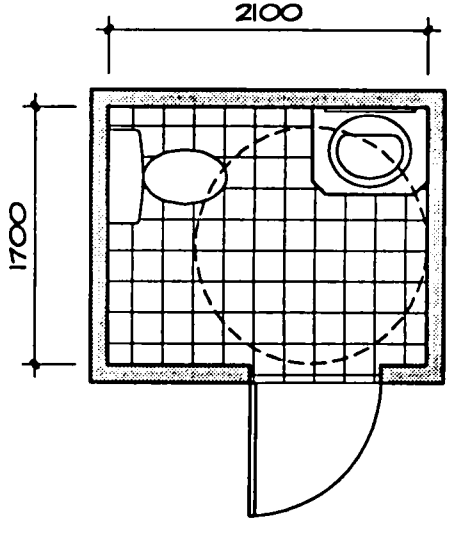

10. LAUNDRY ROOM

GUIDELINES

In **residential buildings with elevators**, where washers and dryers are not included in the dwelling unit, a laundry room should preferably be **installed on each floor.**

In a **residential building without elevators**, the laundry room must be **located on the ground floor or on the main entry level.**

An barrier-free and adaptable laundry room provides sufficient turning space on the floor to manoeuver adequately in front of the counter and the washer and dryer.

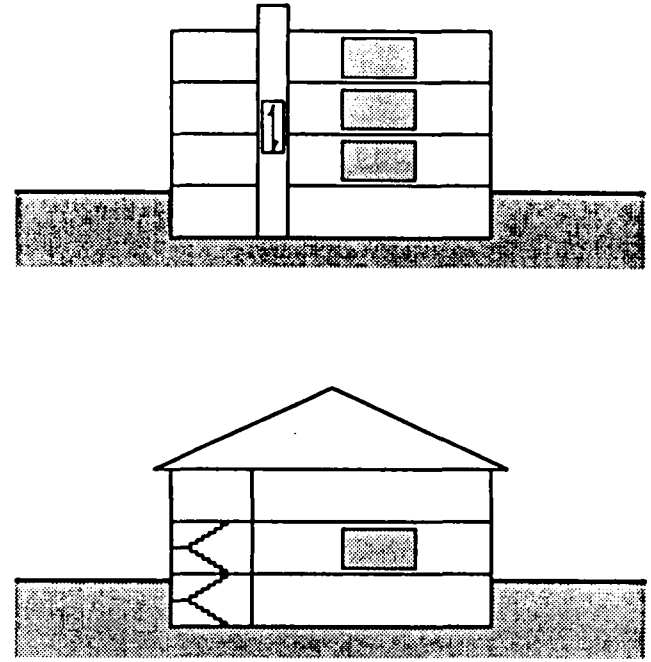

LOCATION

Performance criteria and characteristics

☐ **Access and turning space**

1. door 865 mm wide, with door swing not encroaching on the turning space
2. bevelled threshold 13 mm maximum
3. turning space 1500 mm diameter in front of counters and washer/dryers
4. clearance 300 mm between an appliance and an adjacent wall
5. clearance 680 mm high under the counter

☐ Functional safety

6. door with glazed section whose lower edge is maximum 1050 mm from floor level
7. lighting 200 lux
8. sink with offset drain and insulated trap located at the back, parallel to the wall

☐ Ease of use

9. lever door handle
10. counter at 880 mm from floor level
11. lever faucet at sink
12. light switch at 1050 mm from floor level

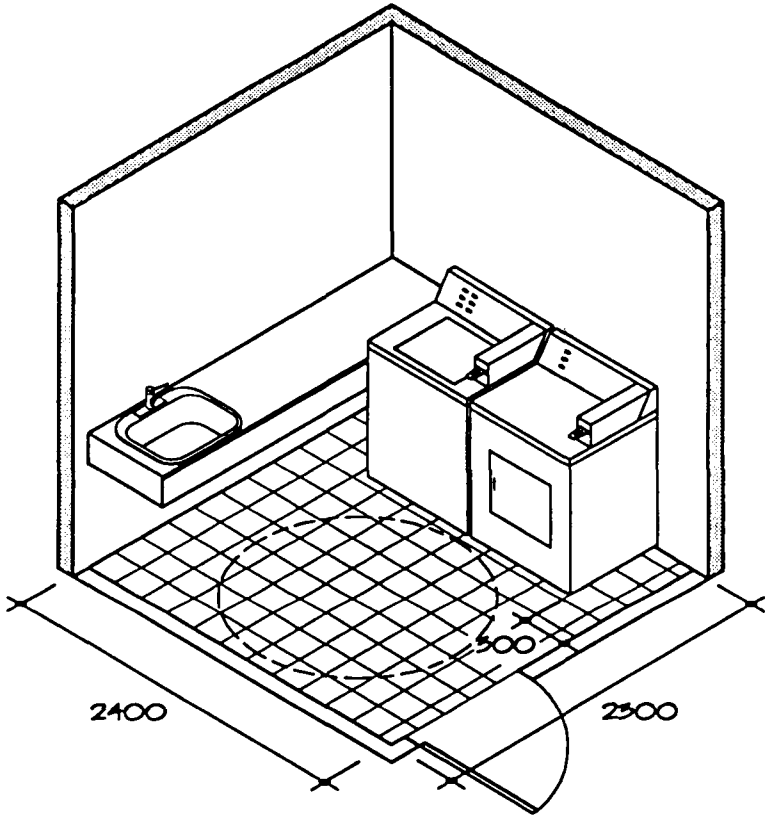

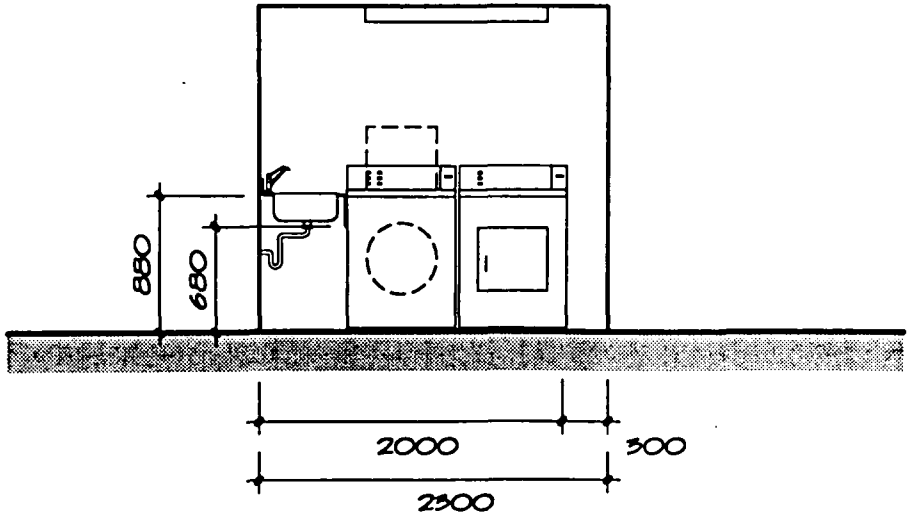

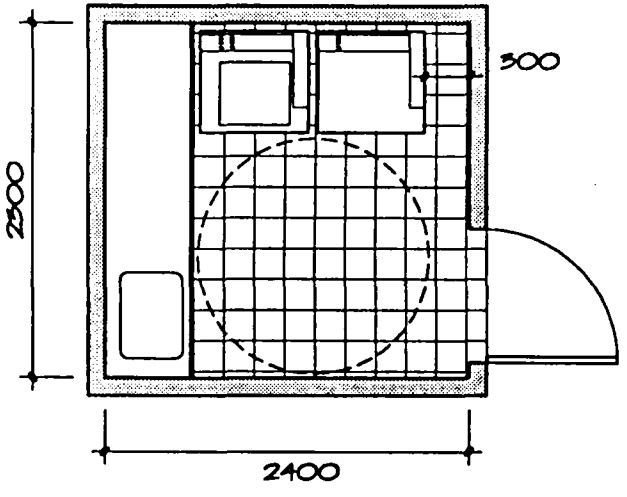

11. COMMON STORAGE

GUIDELINES

Common storage areas are often used to store seasonal articles. These areas must be barrier-free and some of the individual lockers should provide manouvering space despite the presence of stored articles.

Performance criteria and characteristics

☐ **Access and turning space**

1. door 865 mm wide opening to the outside or not encroaching on turning space
2. bevelled threshold 13 mm maximum
3. turning space 1500 mm diameter not encroached by stored articles

☐ **Functional safety**

4. lighting 100 lux

☐ **Ease of use**

5. lever door handle
6. light switch at 1050 mm from floor level
7. electric outlet at 450 mm from floor level

12. EXTERIOR PATHWAYS

GUIDELINES

All the pathways on a residential building site must be barrier-free. If the topography does not allow for this, it will be necessary to provide at least one accessible route. This route must be clearly identified by signs.

A pathway that has a slope higher than 1:20 should be treated as an access ramp (see Theme 1. Access to Multi-family buildings).

☐ **Access and turning space**

1. continuous pathways, without steps
2. maximum slope of 1:20
3. maximum perpendicular slope of 1:50
4. minimum width of pathway 1100 mm, free of obstacles for a height of 1980 mm
5. horizontal surface widened to 1500 mm x 1500 mm every 15 meters
6. horizontal surface widened to 1500 mm x 1500 mm at change of direction

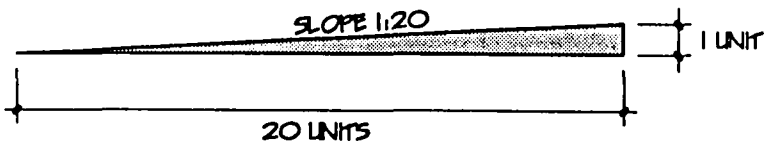

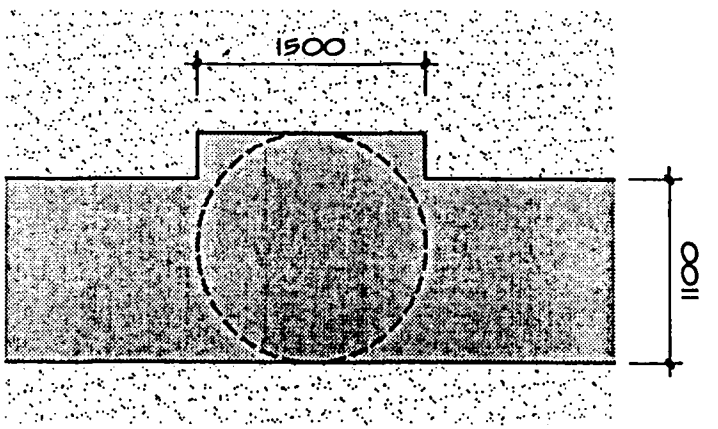

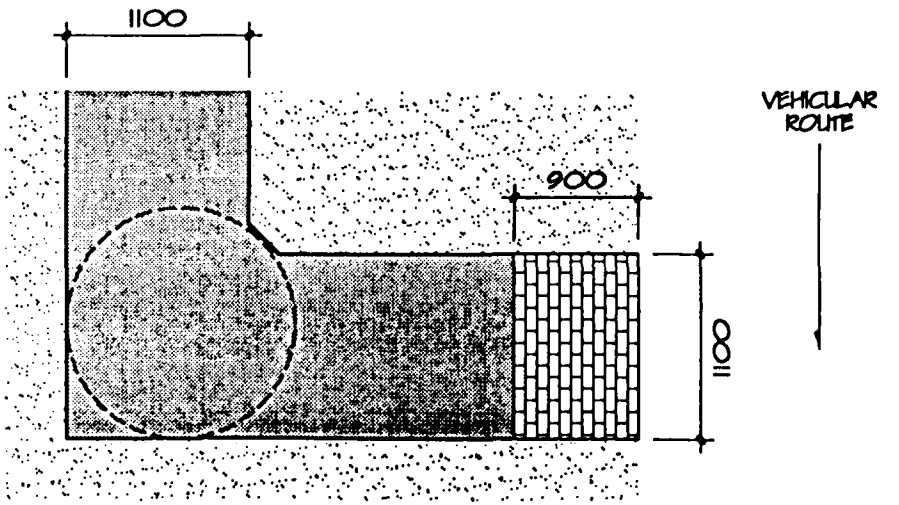

☐ Functional safety

7. exterior lighting 100 lux
8. different texture of pathway to that of the adjacent surface (for example, pedestrian and vehicular path)
9. no change in level between pathway and adjacent surface, or
10. where there is a change in level between pathway and adjacent surface, provide for a 100 mm edge and a railing 1070 mm high
11. pathways adjacent to or within vehicular areas marked with a different texture and colour for a width of 900 mm
12. where provided, furniture with rounded corners

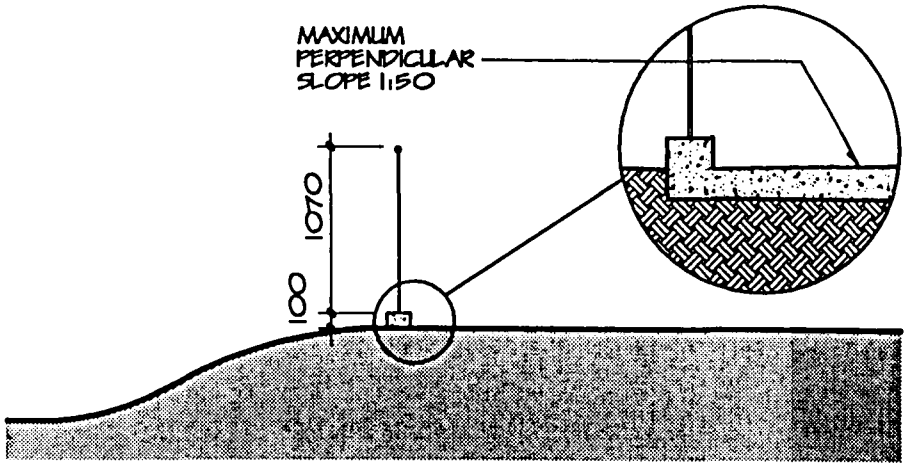

☐ Ease of use

13. pathway surface with the following characteristics:
    a) slip-resistant, stable, firm and uniform (without hollows or projections)
    b) no openings greater than 13 mm diameter; all slots perpendicular to the path of travel
14. locate furniture, if provided, beside the path of travel
15. benches, if provided, with seat 450 mm high, armrests and back supports
16. flower beds, if provided, mounted 450 to 600 mm above ground

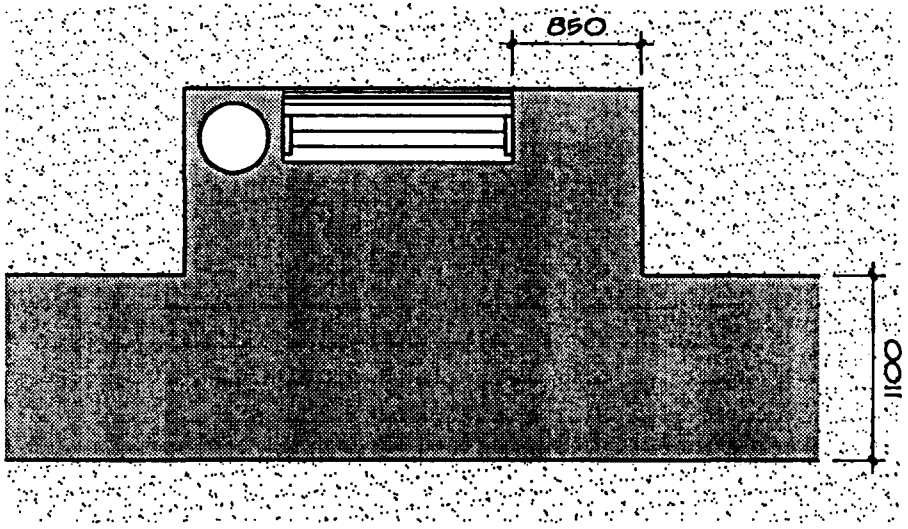

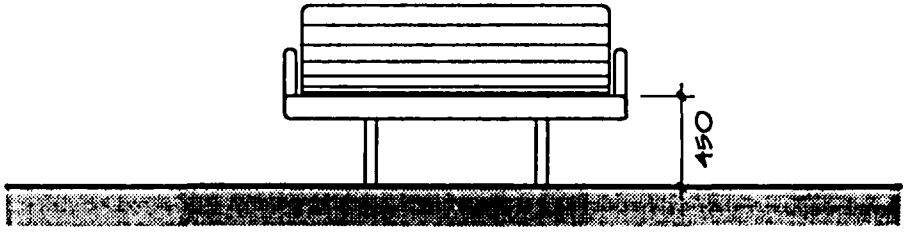

13. PARKING AREA FOR MULTI-FAMILY BUILDINGS

Parking for multi-family residential buildings must offer spaces which meet the varied needs of the residents.

In addition to regular parking spaces, provision must be made for accessible parking spaces reserved for people with functional limitations.

GUIDELINES

Among the parking spaces intended for the residents, a certain number must be accessible. The table in the column at right indicates the recommended proportion.

Moreover, at least one parking space for visitors should be accessible.

The accessible spaces must be located close to an accessible entry or close to an elevator vestibule in an interior parking facility.

Certain vehicles with a mechanical lift need wider access paths than those presented in this section in order to accommodate the lift and the person. For the spatial needs of such vehicles, refer to the section "Meeting Special Needs".

Total number of parking spaces intented for residents			Minimum number of accessible spaces intended for residents
1	to	10	1
11	to	20	2
21	to	30	3
31	to	40	4
41	to	50	5
51	to	60	6
60	and	more	10% minimum required

Source: Société Logique Inc.

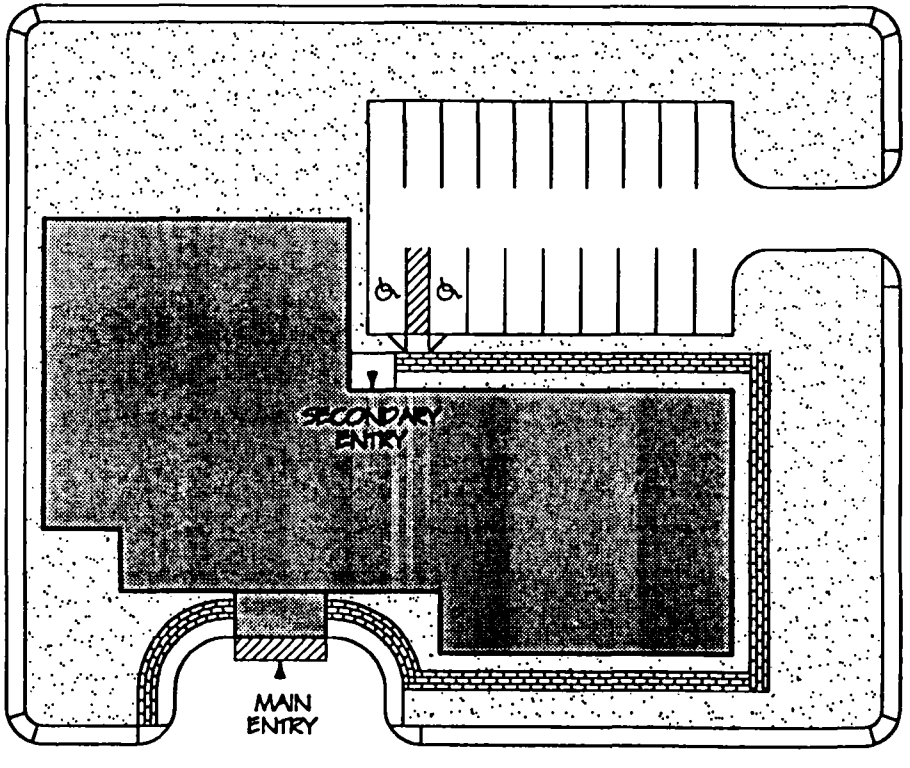

ACCESSIBLE PARKING SPACE:
BASIC MODEL
Performance criteria and characteristics

☐ Access and turning space

1. parking space minimum 2400 mm wide with access path 1500 mm wide parallel to the parking space; each access path can be shared by two parking spaces
2. pathway minimum 1100 mm wide linking the accessible space to the entrance or to an elevator vestibule; this path should not pass behind parked vehicles
3. no change in level between the accessible parking space and the pathway; if there is a change in level, provide an inclined curb cut

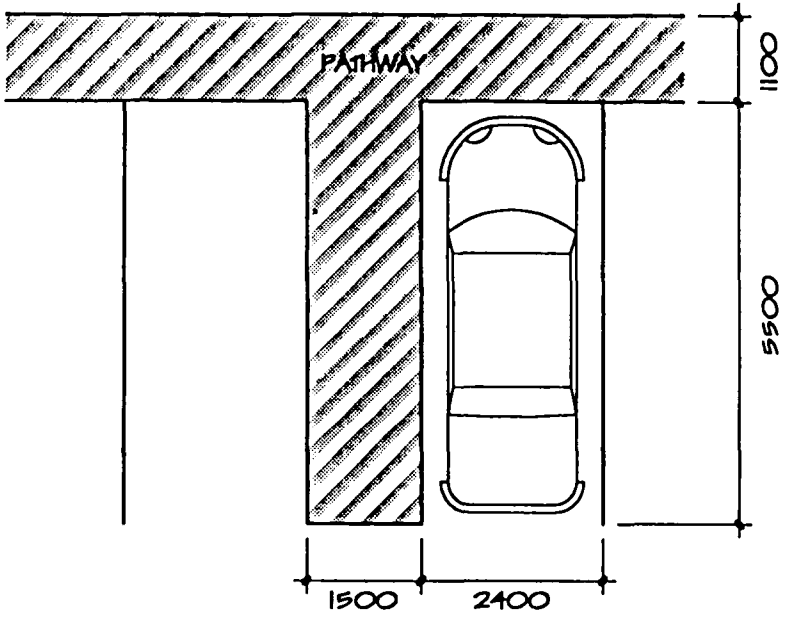

☐ Functional safety

4. general lighting 100 lux

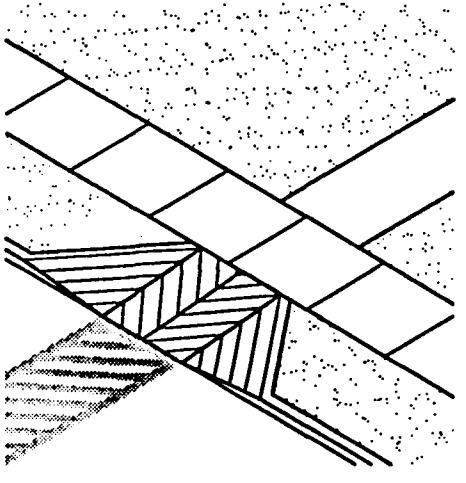

☐ Ease of use

5. stable, firm and uniform surface
6. access paths identified by visual contrast, such as diagonal lines 50 mm wide, painted in bright colour
7. accessible parking space indicated by accessibility pictogram placed on a wall or post, 1500 mm from ground level
8. in interior parking facilities or in covered parking, vertical clearance at 2300 mm minimum
9. in interior parking, garage door with an electric opening device activated by remote control

☐ Adaptability

10. in interior parking facilities, electric outlet above the door of the elevator vestibule for the installation of an automatic door-opening device, if required

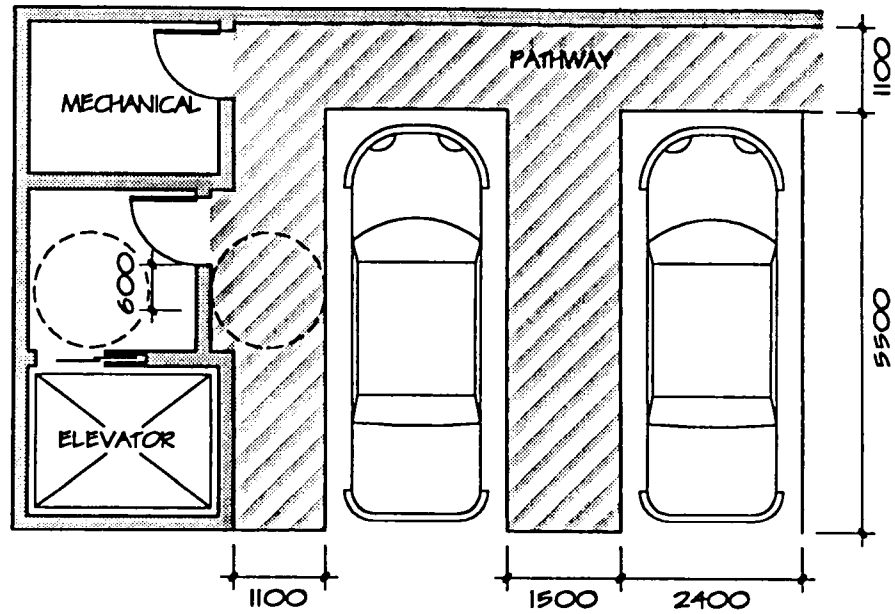

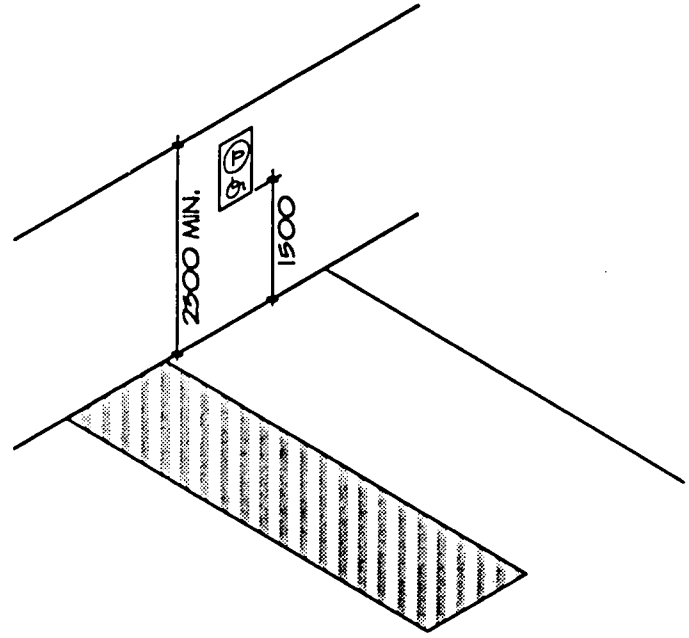

14. ACCESS TO SMALL RESIDENTIAL BUILDINGS

GUIDELINES

The ground floor entrance in small residential buildings should be barrier-free.

A preferred layout would position the building so as to minimize the difference in level between the ground floor and the sidewalk. It would then be possible to provide a pathway with a gentle slope (height/length ratio less than 1:20) to the building.

In situations where the ground floor is above grade, the siting of the building must allow for adaptability, that is, for the eventual installation of an access ramp or a lift.

An alternative approach would be to provide a split-level entrance vestibule at grade, with provision for the installation of an interior vertical lift, if required.

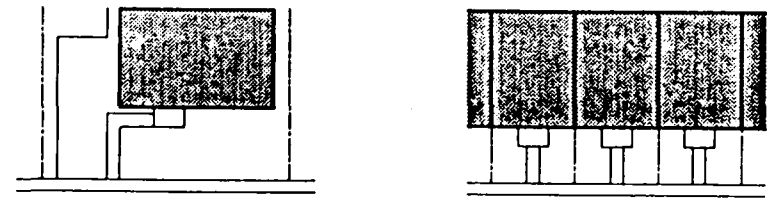

PATHWAY WITH LOW SLOPE
BASIC MODEL

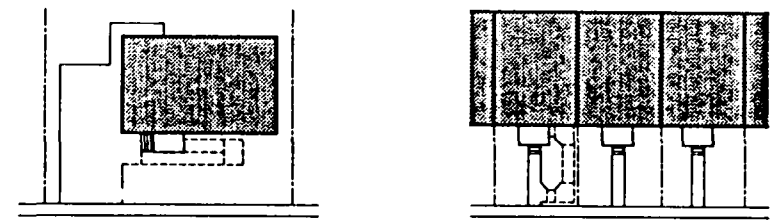

LAYOUT PERMITTING AN EVENTUAL INSTALLATION OF AN ACCESS RAMP

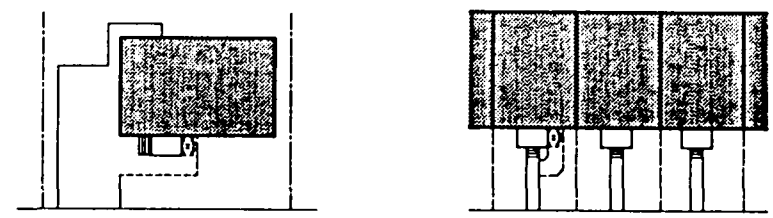

LAYOUT PERMITTING AN EVENTUAL INSTALLATION OF AN EXTERIOR LIFT

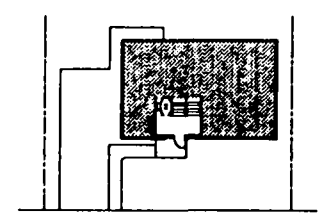

SPLIT-LEVEL LAYOUT PERMITTING AN EVENTUAL INSTALLATION OF AN INTERIOR LIFT
ALTERNATIVES

ACCESS TO SMALL RESIDENTIAL BUILDING: BASIC MODEL

Performance criteria and characteristics

Access at grade, with low sloping pathway (less than 1:20)

☐ **Access and turning space**

1. continuous pathway, without steps and with a maximum slope of 1:20
2. maximum perpendicular slope of 1:50
3. minimum width of pathway 900 mm
4. landing with 1500 mm diameter turning space, beyond the door swing

☐ **Functional safety**

5. slip-resistant, stable, firm and uniform surface (without hollows or projections)
6. lighting at entry 200 lux

☐ **Ease of use**

7. house number 100 mm minimum high, in contrasting colour, with direct lighting 100 lux
8. letter box at 1050 mm maximum from ground level
9. lighted door bell at 1050 mm maximum from ground level

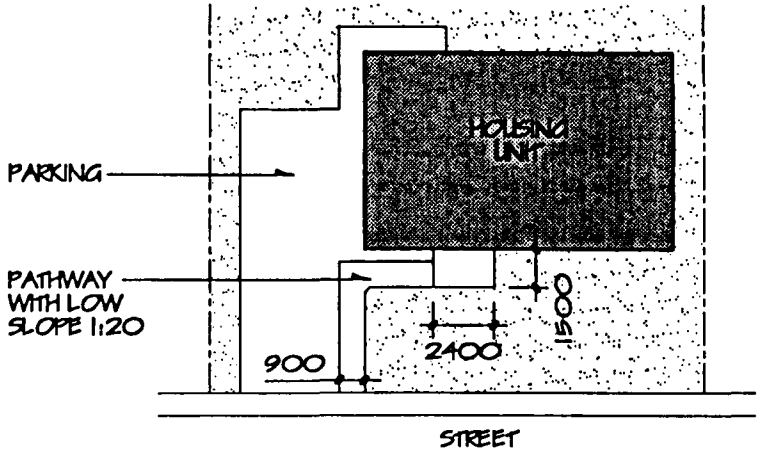

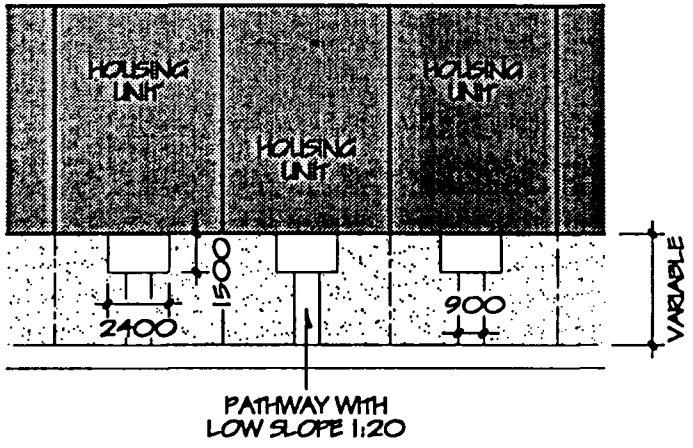

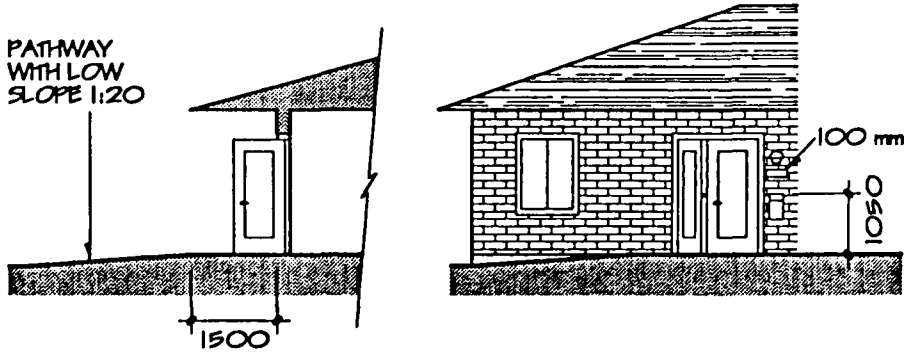

ANOTHER EXAMPLE OF ACCESS TO SMALL RESIDENTIAL BUILDINGS: ADAPTABLE ACCESS

These alternatives allow for the use of the basement either as storage or as an additional living space. They must have the same characteristics as the basic model. (See also Theme 16. Entry to dwelling unit)

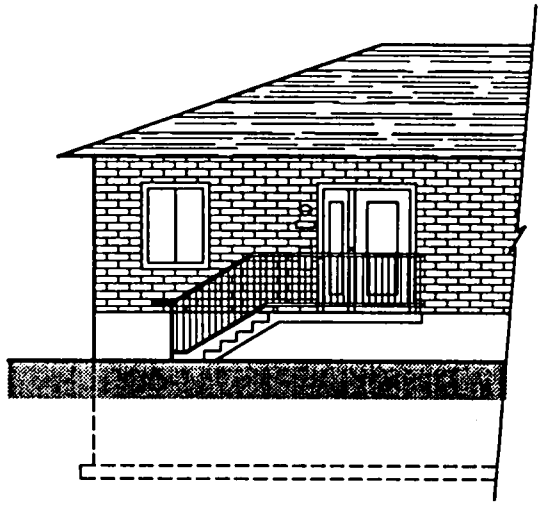

☐ Access above grade

The proposed layouts allow for the entry to be adapted. The equipment used to adapt the entry (with a ramp or a lift) will depend on the site area available and on the difference in levels involved.

To allow for the eventual installation of an access ramp or a lift, the balcony must be a minimum 1500 mm x 2400 mm with a turning space 1500 mm in diameter beyond the door swing.

The stairs should have handrails on both sides, extending 300 mm beyond the steps at the top and 300 mm and one tread depth at the bottom. The step nosing must be slip-resistant.

The door should have a bevelled threshold, a maximum 13 mm high.

The balcony railings should have vertical bars or be of transparent material.

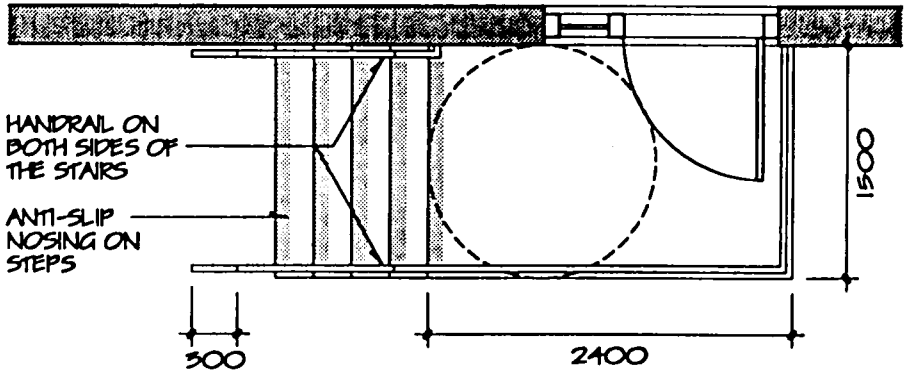

ADAPTATION - ACCESS RAMP

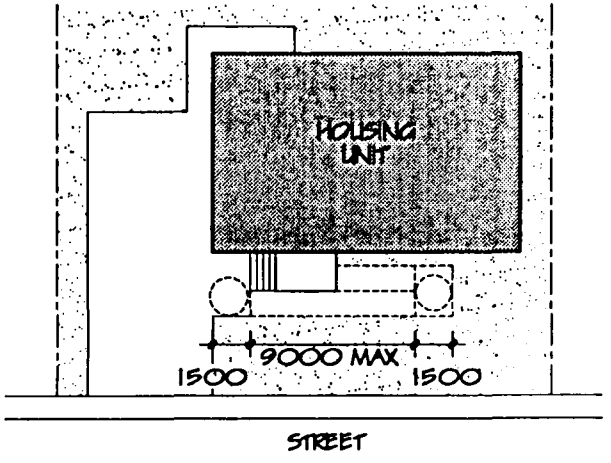

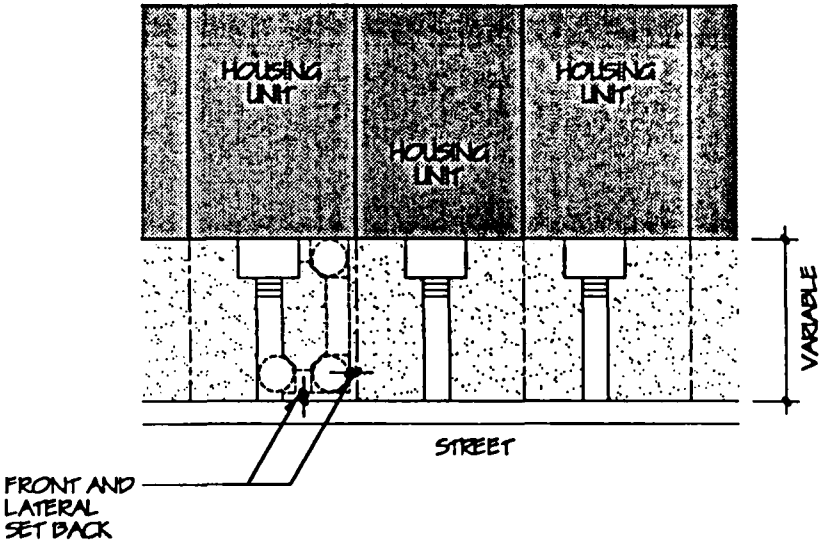

ADAPTATION - EXTERIOR VERTICAL LIFT

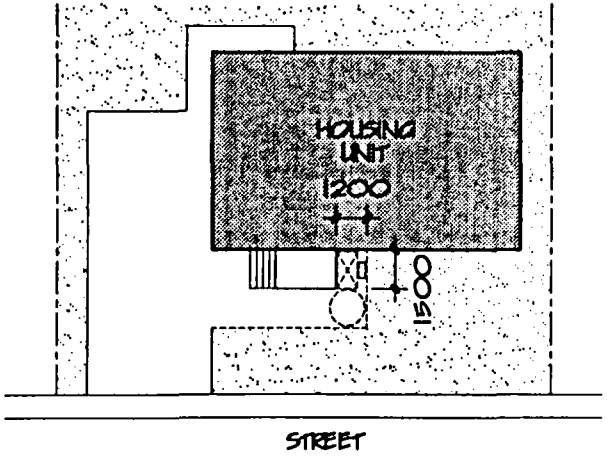

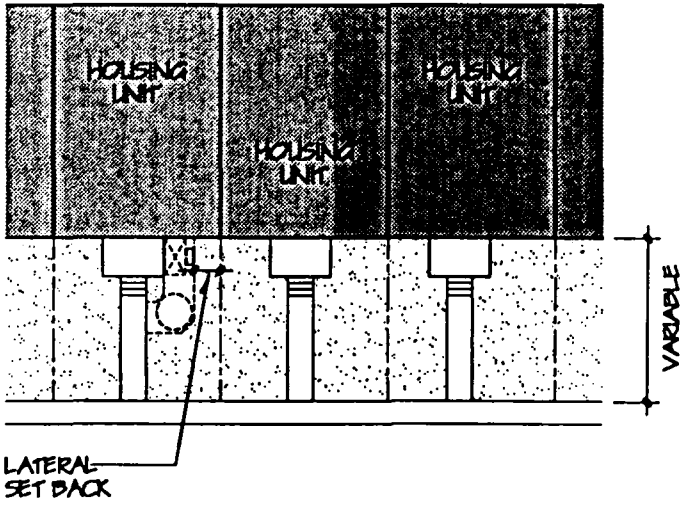

☐ Access at grade level with a split-level entry

It is possible to design a building layout which can benefit from the advantages of a grade level access and a liveable basement, and where the adaptations can be carried out within the building, in the entry vestibule (see page 16.5 for details).

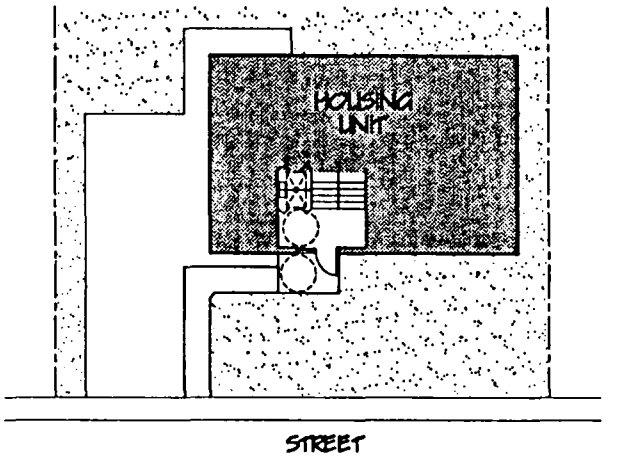

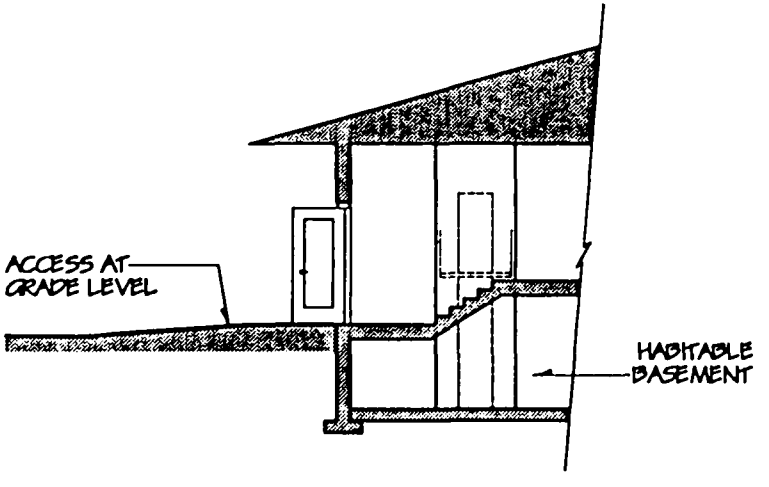

15. PARKING AREA FOR SMALL RESIDENTIAL BUILDINGS

GUIDELINES

The parking space must be located as close as possible to the building's main entry.

It is recommended that provision for a parking space be virtually on the same level as the entry.

The parking space must be adequate for different types of vehicles to meet the varied needs of the residents.

It is preferable to protect the parking space from weather by providing a carport or a garage.

Some vehicles equipped with a lift require parking spaces that are wider and higher than those presented in this section. To accommodate such vehicles, refer to the Theme "Meeting Special Needs".

Parking located in a semi-basement may be interesting solution if the entry to the building is at split-level and if a provision for a vertical interior junction has been provided (see page 14.5 and page 16.5).

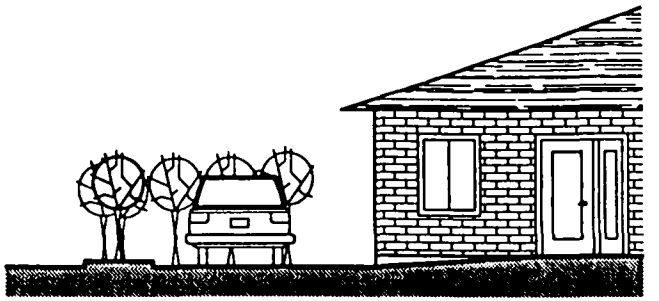

BASIC MODEL

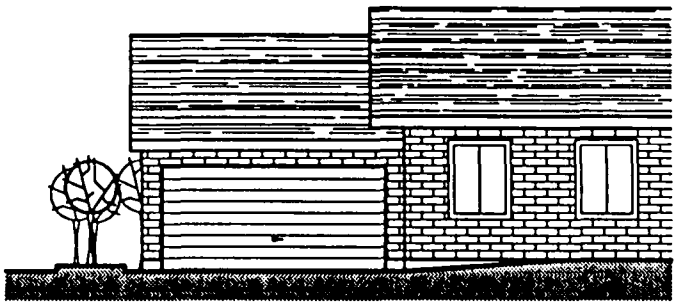

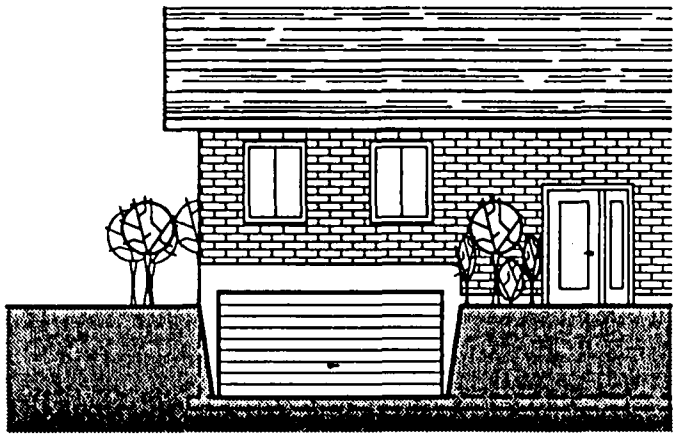

GARAGE
ALTERNATIVES

PARKING SPACE: BASIC MODEL
Performance criteria and characteristics

☐ **Access and turning space**

1. parking space minimum 3900 mm wide
2. pathway 900 mm wide at each end of the space

☐ **Functional safety**

3. general lighting 100 lux

☐ **Ease of use**

4. stable, firm and uniform surface

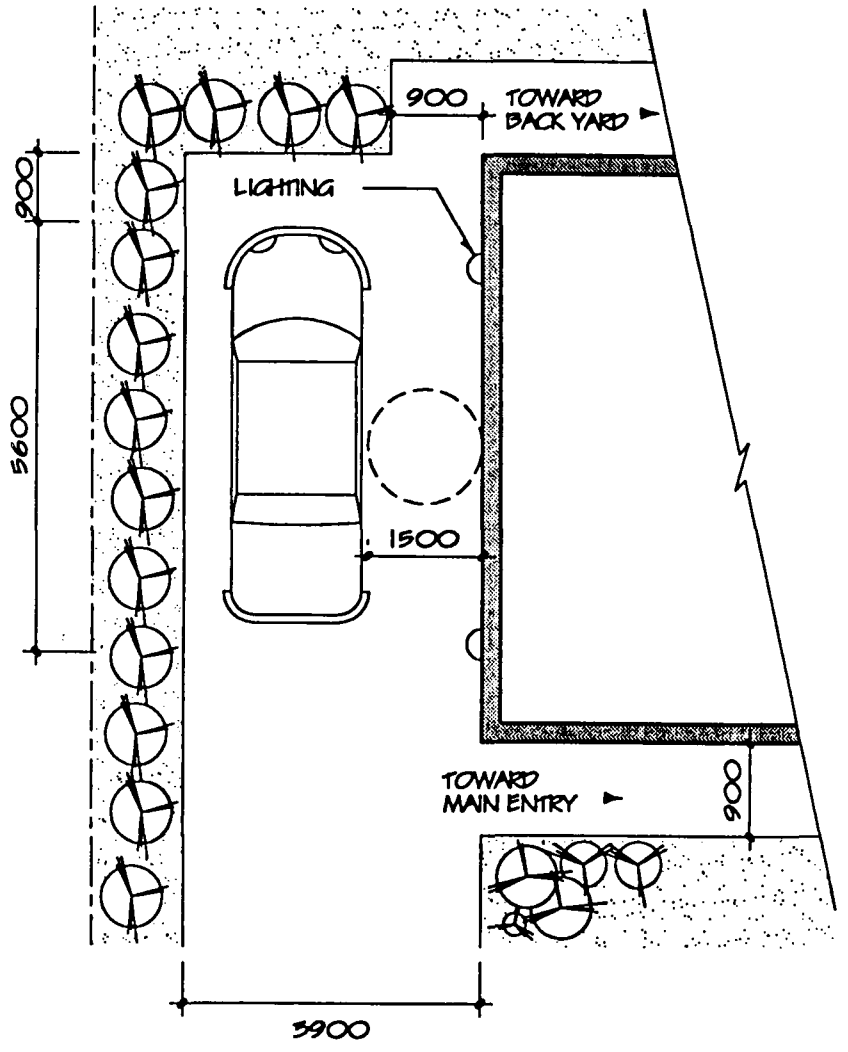

OTHER EXAMPLE OF PARKING SPACE

The proposed alternative deals with parking space protected from the weather. The performance criteria and characteristics of the basic model apply here also.

☐ Garage

The garage should allow direct access to the residence. The garage may be in a semi-basement or at grade, according to the entry and vestibule relation chosen.

The vertical clearance in the garage should be 2300 mm minimum.

The interior dimensions of the garage allow for a 1500 mm diameter turning space on one side of the vehicle. It is preferable to allow a clearance of 900 mm on the other three sides.

The doors are 865 mm wide, with a bevelled threshold 13 mm maximum and a lever handle at 950 mm from ground level. An electric outlet above the entry door to the house, on the inside of the garage, allows for the eventual installation of an automatic door-opening device.

The garage door should be electrically operated by a remote control.

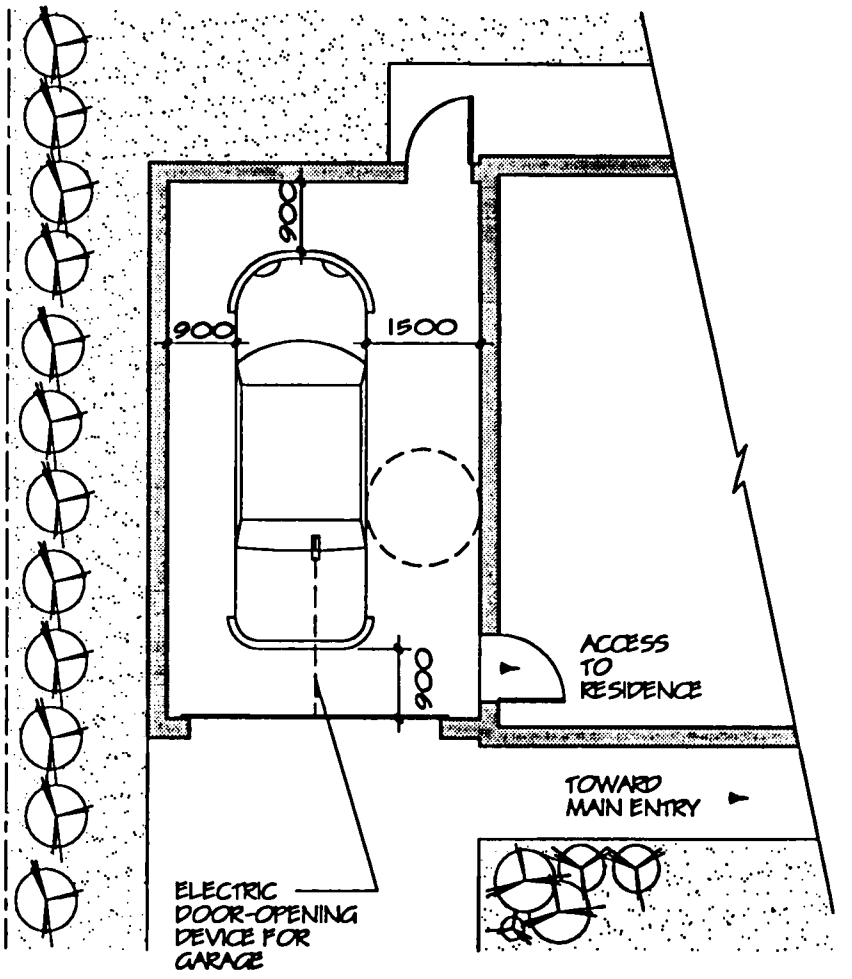

16. ENTRY TO DWELLING UNIT

The performance criteria and characteristics of the unit entry presented in this section apply to the vestibule of a small residential building (access from the outside) as well as to the entry for dwelling units in residential buildings (access from public corridor).

GUIDELINES

The vestibule provides an adequate turning space. The entry area allows for clear access to the storage space, to other equipment, and to allow closing the exterior door before opening the interior one (where the latter exists).

The light switch must be located in the entry, adjacent to the entry door.

The storage space and some equipment (such as a bench, alarm system, etc.) may be located inside or outside the vestibule.

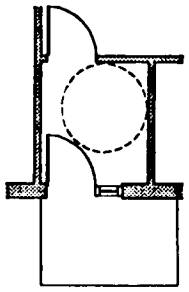

ACCESS FROM EXTERIOR

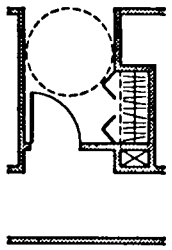

ACCESS FROM PUBLIC CORRIDOR

BASIC MODEL

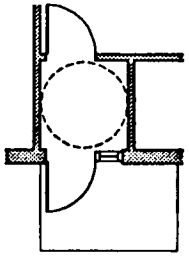

DOOR OPENING TO THE OUTSIDE

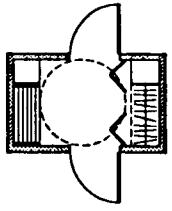

WITH BENCH AND CLOTHES-CLOSET

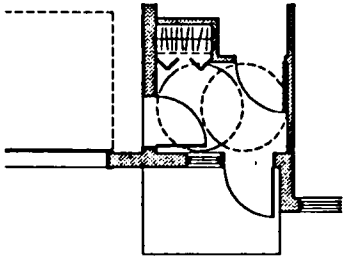

DIRECT ACCESS FROM CARPORT OR GARAGE

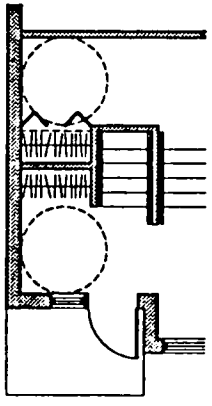

SPLIT LEVEL ENTRY ADAPTABILITY OF STORAGE AREA

ALTERNATIVES

DWELLING UNIT VESTIBULE: BASIC MODELS

Performance criteria and characteristics

In general, doors in small residential buildings open toward the inside of the unit.

However, certain situations enable the installation of an entry door that opens to the outside. Thus the area required for the vestibule is diminished.

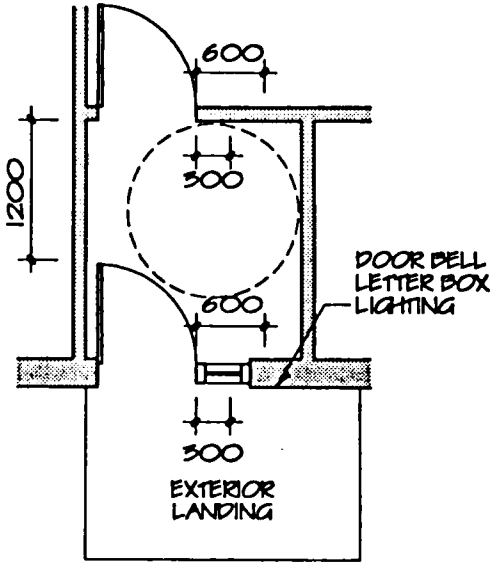

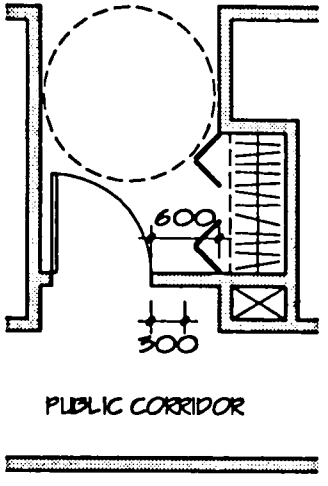

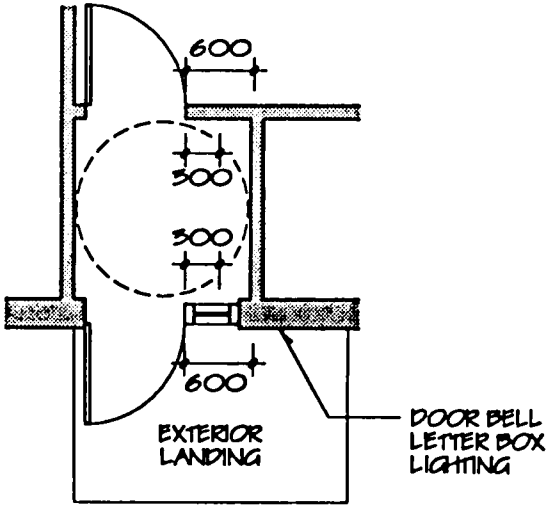

☐ **Access and turning space**

1. turning space 1500 mm diameter, beyond the door swing
2. doors 865 mm wide
3. bevelled threshold 13 mm maximum
4. wall clearance 600 mm at handle edge of door, in the pull direction
5. wall clearance 300 mm at handle edge of door, in the push direction

☐ Functional safety

6. for a vestibule with direct access to the outside, an exterior door with a glazed section whose lower edge is at 1050 mm maximum from floor level, or a glazed side panel
7. for a vestibule opening onto a public corridor, a door with two peepholes, one at 1100 mm and the other at 1500 mm from floor level
8. general lighting 200 lux

☐ Ease of use

9. lever door handle
10. lock easy to manipulate
11. light switch at 1050 mm from floor level
12. where provided, thermostat at 1200 mm from floor level
13. where provided, electric outlet at 450 mm from floor level
14. where provided, alarm control panel at 1050 mm from floor level

☐ Adaptability

15. electric outlet above the door, on the inside of the unit, allowing for possible installation of an automatic door-opening device

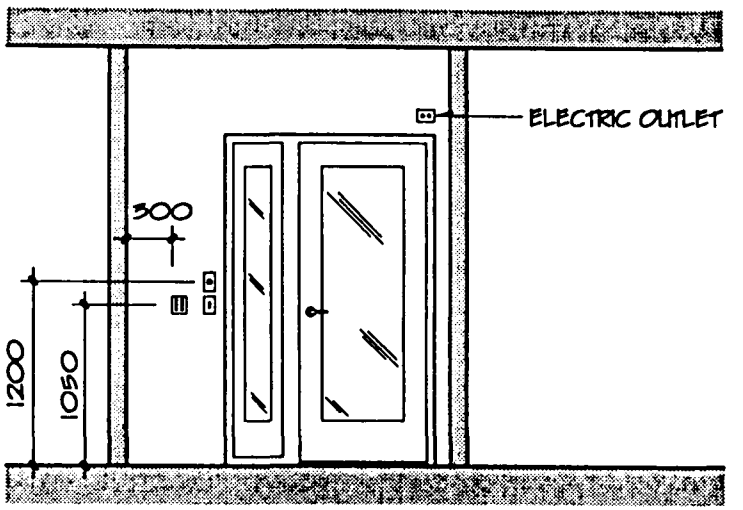

EXTERIOR ACCESS: INTERIOR SIDE OF VESTIBULE

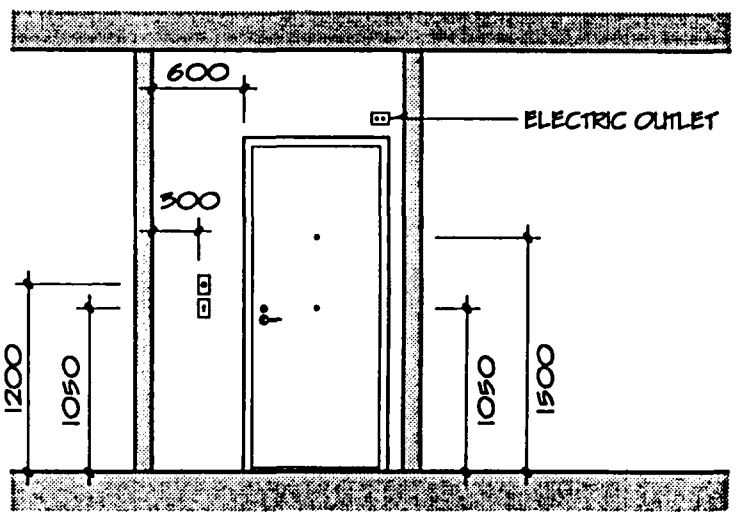

ACCESS FROM A PUBLIC CORRIDOR: INTERIOR SIDE OF UNIT

OTHER EXAMPLES OF UNIT VESTIBULES

The performance criteria and characteristics listed for the basic model must be respected for the following alternatives.

☐ Vestibule with bench and clothes closet

A 1500 mm diameter turning space should be provided in front of the bench and clothes closet.

The bench seat at 450 mm above the floor level.

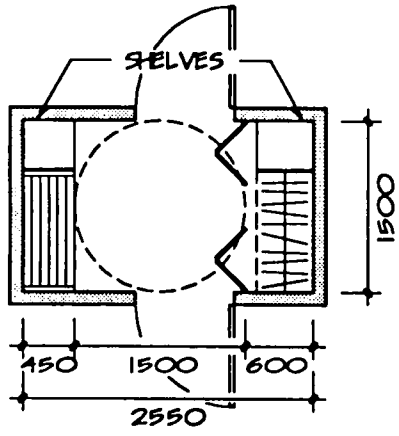

☐ Vestibule opening directly onto garage or carport

The vestibule forms a transition zone between the garage or carport and the dwelling unit.

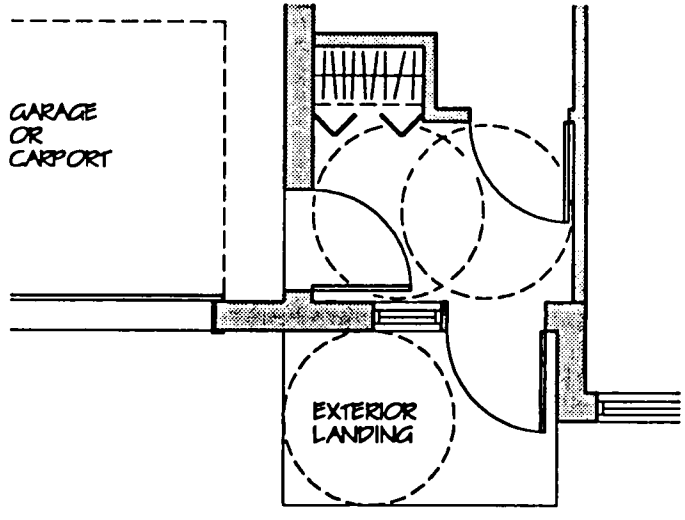

☐ Vestibule with split-level unit entry, with adaptable storage space

This vestibule layout is part of the concept of a split-level building which was introduced in the Theme 14 "Access to Small Residential Buildings" (page 14.5) and in the Theme 15 "Parking area for small residential buildings" (page 15.3).

To take advantage of both grade entry and a habitable basement, the unit vestibule has a storage area which could be eventually converted into a home lift shaft.

The characteristics of the storage space are the following:

- combined interior dimensions 1200 mm x 1420 mm*
- turning space 1500 mm diameter in front of storage doors

* It is recommended to verify the dimensions of various home lifts available on the market before deciding on the final dimensions.

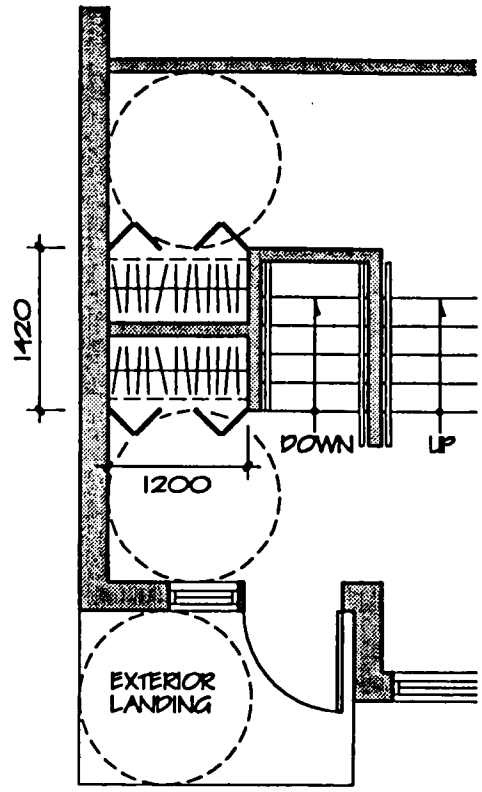

17. CIRCULATION WITHIN DWELLING UNIT

The circulation spaces in dwelling units are the corridors and stairs.

In barrier-free and adaptable units, particular attention must be given to the design of these elements.

GUIDELINES

All the corridors of a housing unit must respect the barrier-free performance and characteristics, including corridors located on floors other than the ground floor or the main entry level.

All stairs in housing units must have characteristics that ensure functional security and ease of use. At least one stair serving all levels shall be designed to eventually accommodate an inclined platform lift.

Vertically-aligned storage areas also offer an alternative to enable the eventual installation of a vertical lift to serve all floors.

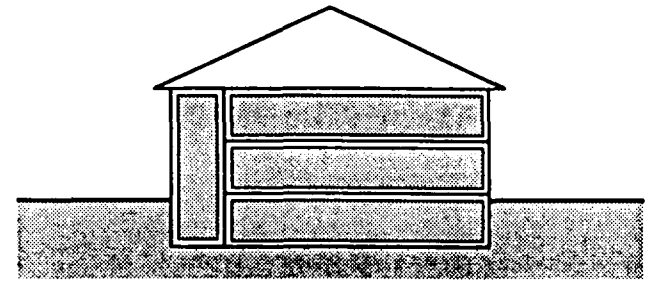

LOCATION

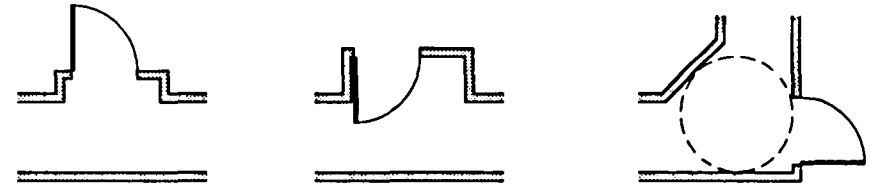

DOOR OPENING TO THE INSIDE OF UNIT

DOOR OPENING TO THE CORRIDOR

CHANGE OF DIRECTION

HORIZONTAL CIRCULATION

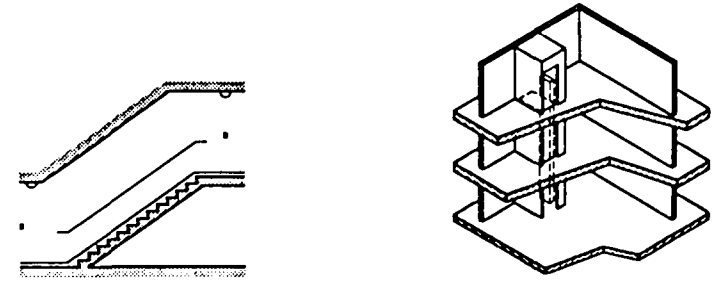

STRAIGHT FLIGHT OF STAIRS

VERTICALLY-ALIGNED STORAGE AREA

VERTICAL CIRCULATION

HORIZONTAL CIRCULATION WITHIN THE DWELLING UNIT
Performance criteria and characteristics

The corridor must be sufficiently wide to allow for the unobstructed passage of residents and for adequate clearance to access the rooms. One clearance area may allow access to a number of rooms.

☐ Access and turning space

1. minimum clear width 900 mm
2. to access a room where the door opens to the inside of the room:
   a) minimum corridor width 1200 mm
   b) door width 865 mm
   c) wall clearance 300 mm at the handle edge of the door
3. to access a room where door opens onto the corridor:
   a) minimum corridor width 1500 mm
   b) door width 865 mm
   c) wall clearance 600 mm at the handle edge of the door
4. for changing directions, minimum 1500 mm diameter turning space; an interior 45° corridor corner makes it possible to obtain this space
5. at the end of corridors, minimum 1500 mm diameter turning space

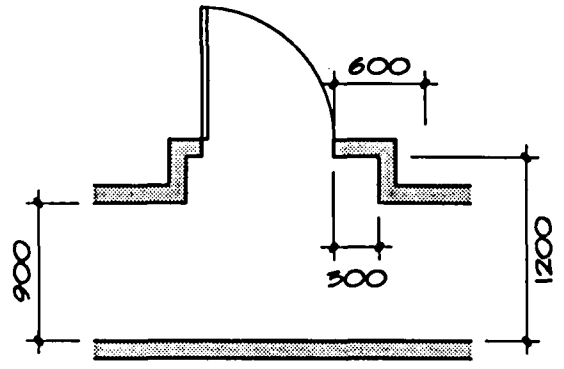

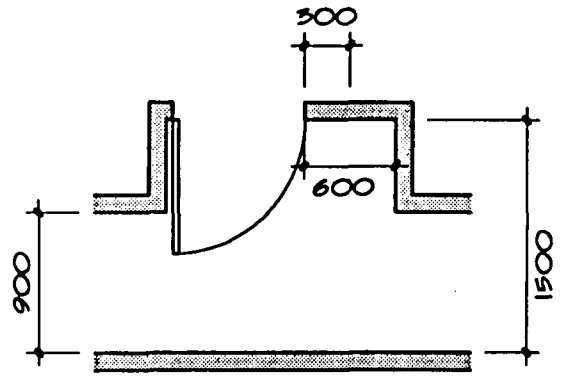

☐ Functional safety

6. 3-way switch at end of corridors
7. general lighting 100 lux

☐ Ease of use

8. lever door handles or D-shaped handles
9. light switch at 1050 mm from floor level
10. electric outlet at 450 mm from floor level

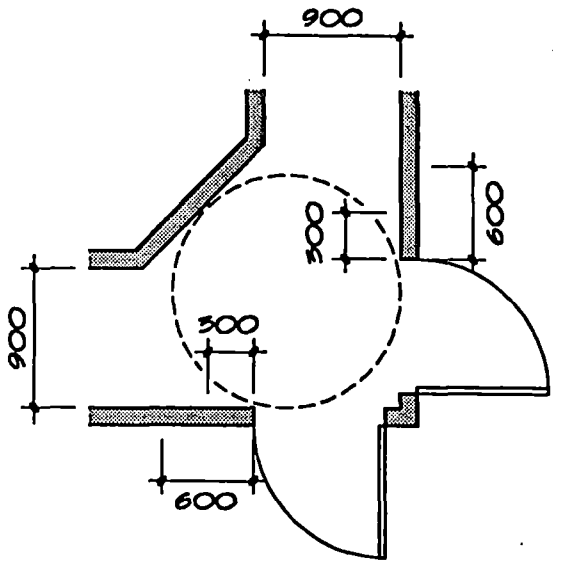

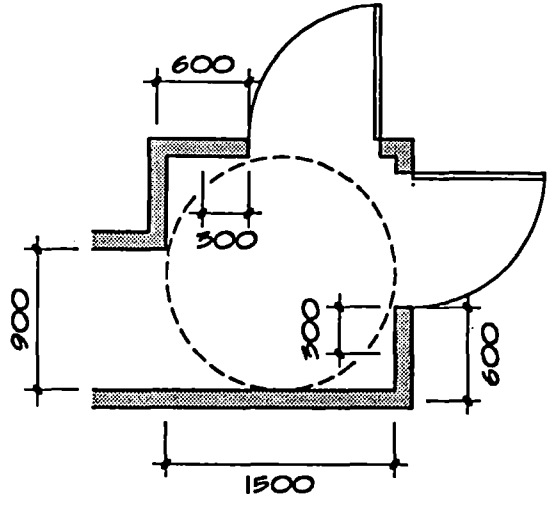

VERTICAL CIRCULATION WITHIN THE DWELLING UNIT
Performance criteria and characteristics

Stairs must be designed so that they are safe and easy to use.

Adaptability characteristics make it possible for stairs to accommodate specialized equipment such as an inclined platform lift.

☐ Functional safety

11. constant tread/riser ratio within the same flight
12. closed risers
13. handrails on both side of stairs with 3 steps or more
14. general lighting 200 lux

☐ Ease of use

15. tread depth 250 mm minimum and riser height 180 mm maximum
16. handrails 30-40 mm diameter with wall clearance and shape appropriate for a good grip
17. handrails installed between 800 and 920 mm from step nosing
18. handrails extending 300 mm beyond the steps at the top of the stairway, and 300 mm plus one tread depth at the bottom of the stairway
19. 3-way switch at the bottom and top of stairway, at 1050 mm from floor level

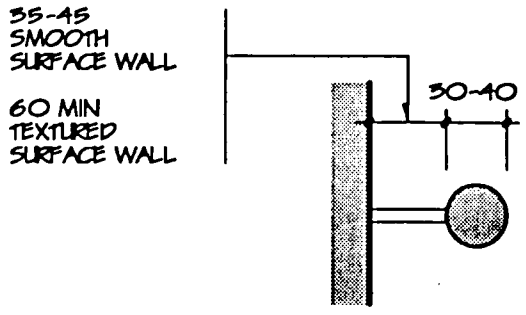

☐ Adaptability

20. stairway in one straight flight, with a minimum width of 900 mm
21. minimum clear space at bottom of stairway 1500 mm long
22. turning space 1500 mm diameter at top of stairway

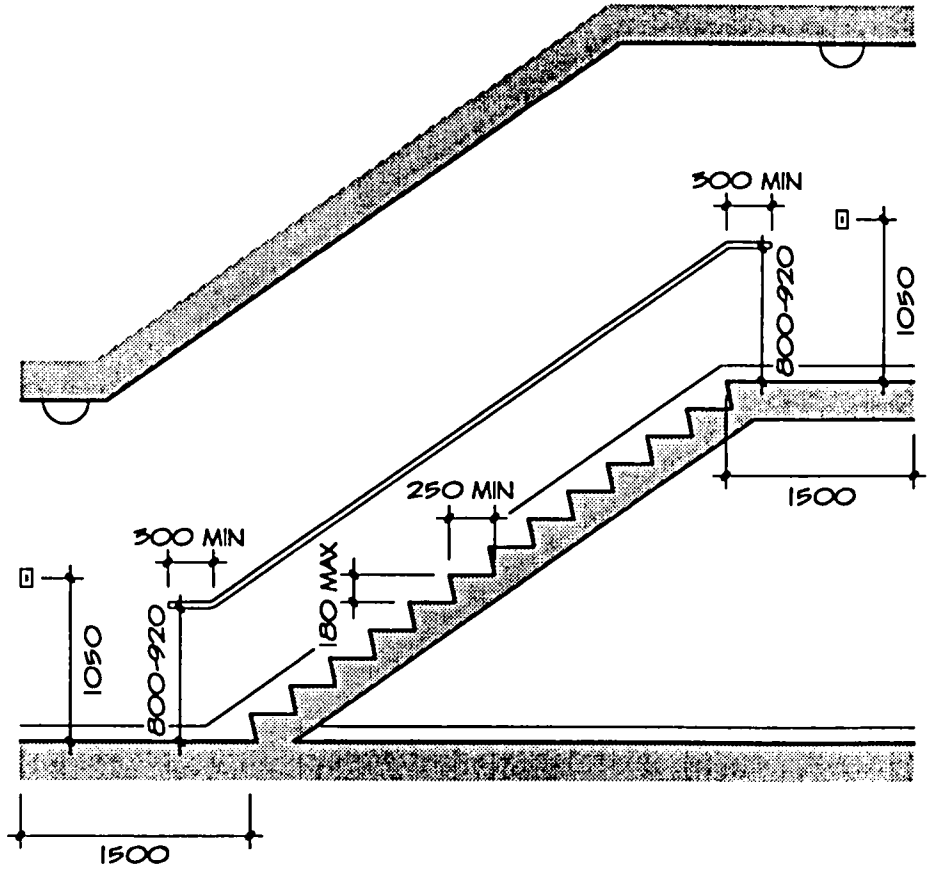

ANOTHER EXAMPLE OF ADAPTABILITY IN VERTICAL CIRCULATION

It is possible to vertically align a large storage space (1200 mm x 1420 mm)* on each floor.

These storage spaces could eventually be converted into a shaft for a vertical lift.

* It is recommended to verify the dimensions of the various home lifts available on the market before deciding on the final dimensions of the storage.

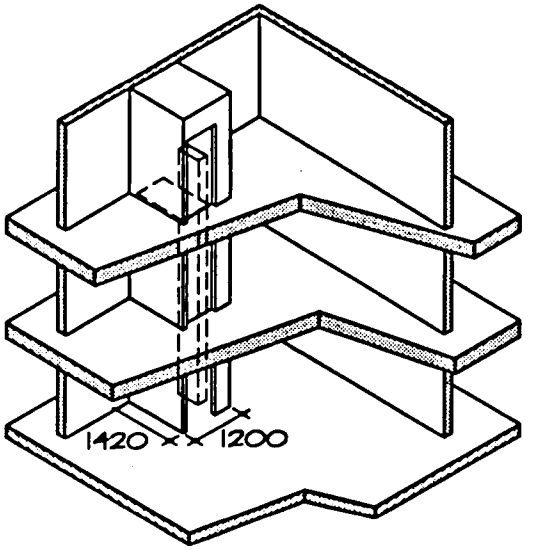

18. KITCHEN

The kitchen is the place where numerous activites occur that require movement and manipulation.

A judicious layout will promote the functional and safe use of the equipment and appliances.

GUIDELINES

The kitchen must **communicate directly with an accessible eating area** or a dining room.

This accessible eating area or dining room is a space which accomodates a table seating at least four people. An adequate approach to the table and a turning space at one end are required.

The layout of an accessible and adaptable kitchen assures an open floor area to allow sufficient manouvering space in front of the work counters, storage spaces and appliances.

An appropriate layout of the furnishings and appliances reduces displacements and makes it easier to perform kitchen duties. Kitchen layouts in an " L" or a " U" shape offer a continuous work surface between the main cooking activities, and minimize travel and reaching distances. The "corridor" kitchen does not provide continuous work surfaces, and is, therefore, not appropriate.

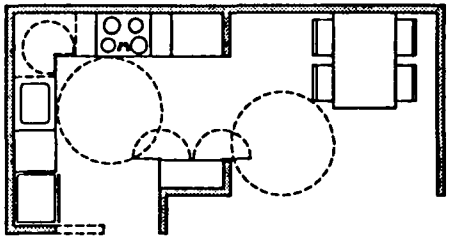

"L" SHAPED KITCHEN

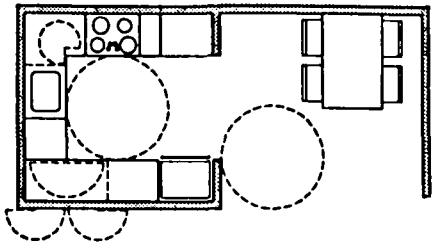

"U" SHAPED KITCHEN

BASIC MODELS

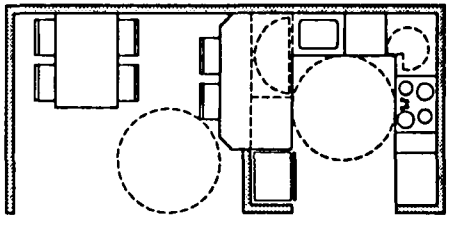

WITH EATING COUNTER

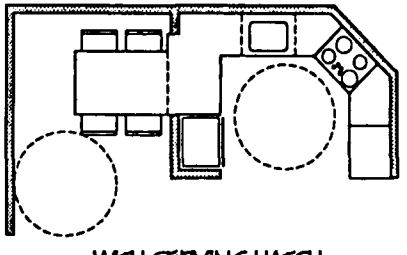

WITH SERVING HATCH

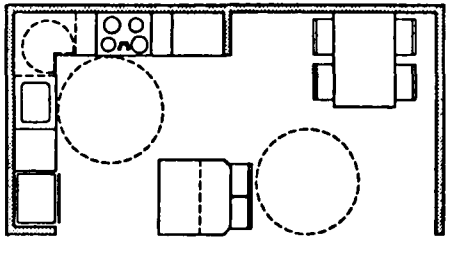

WITH ISLAND

ALTERNATIVES

The layout of the appliances and the counters must facilitate the relation between the main activity areas: sink, cook top, work surface, storage. It is also essential that the eating area be located close to the food preparation area.

KITCHEN: BASIC MODEL
Performance criteria and characteristics

☐ **Access and turning space**

1. door 865 mm wide or minimum clear passage width 810 mm
2. no threshold between kitchen and adjacent areas
3. turning space 1500 mm diameter in front of counters, storage and appliances
4. counter under sink to allow for a possible clearance 680 mm high and 760 mm wide
5. toe recess 180 mm high and 150 mm deep

☐ **Functional safety**

6. sink with offset drain and insulated trap located at the back
7. continuous work surface between cook top and sink to permit sliding equipment instead of carrying it
8. general lighting 200 lux
9. directed lighting 250-500 lux at the sink, cooking elements and work surfaces

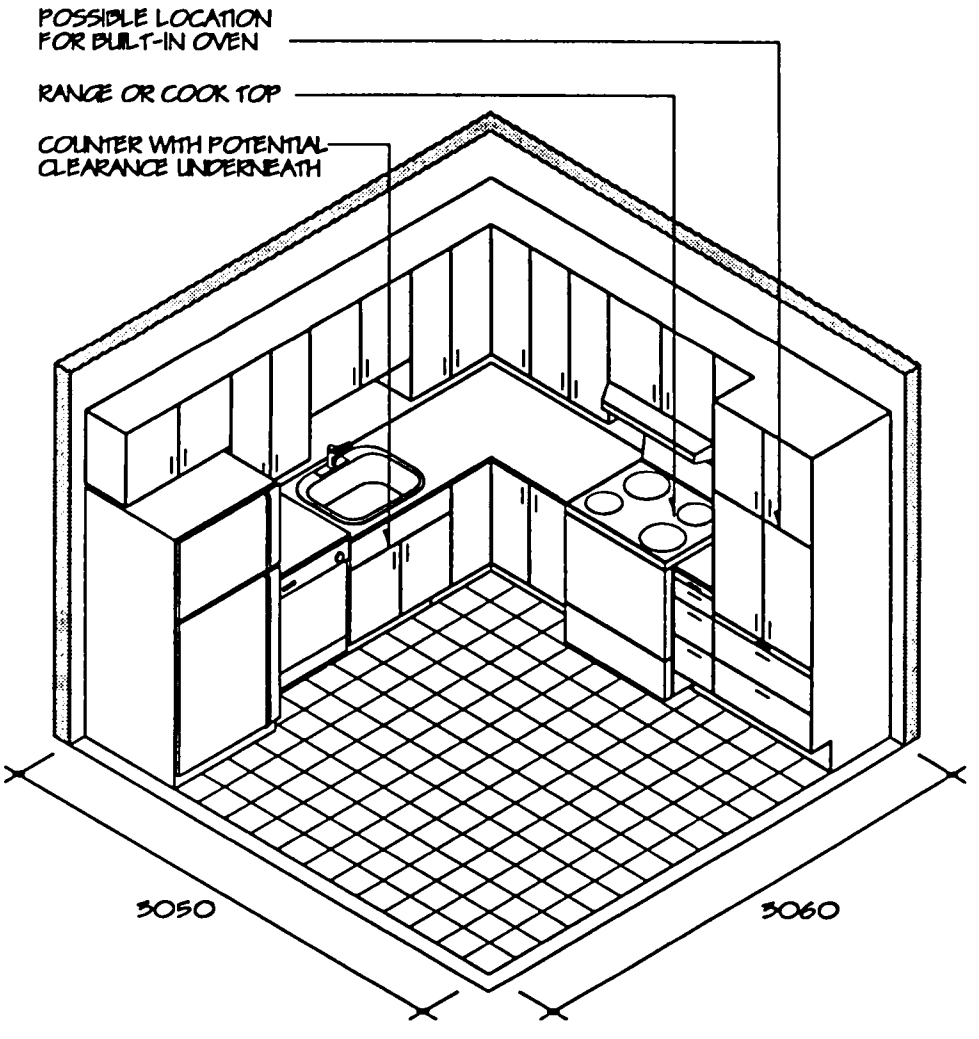

10. where provided, a built-in oven with door opening to the side
11. where provided, electric range or cook top with offset elements and with controls at the side or at the front

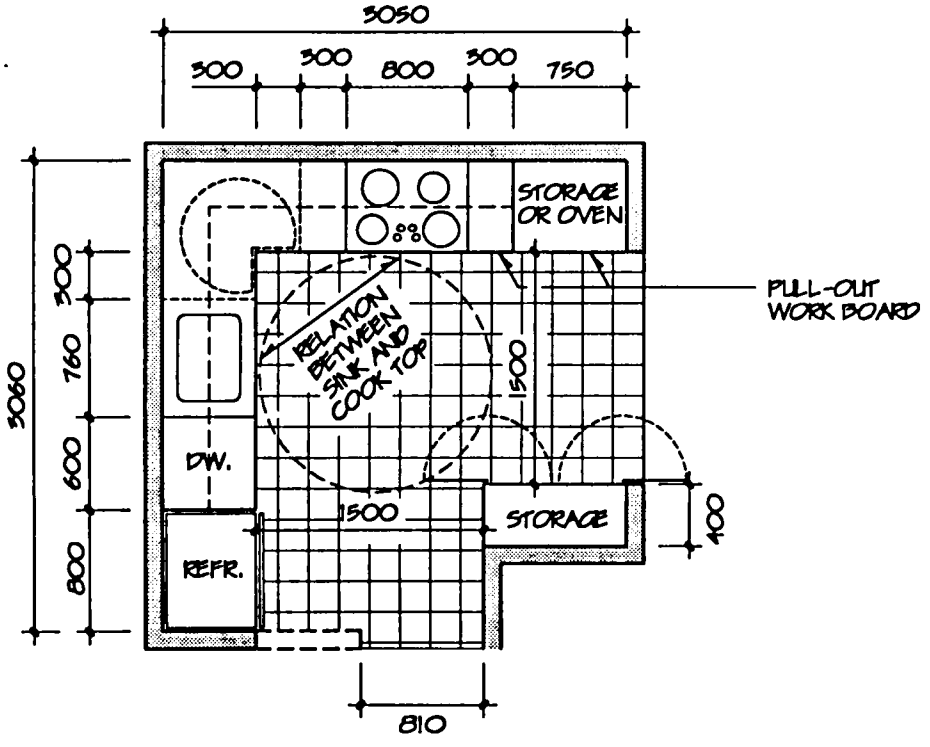

"L" SHAPED KITCHEN

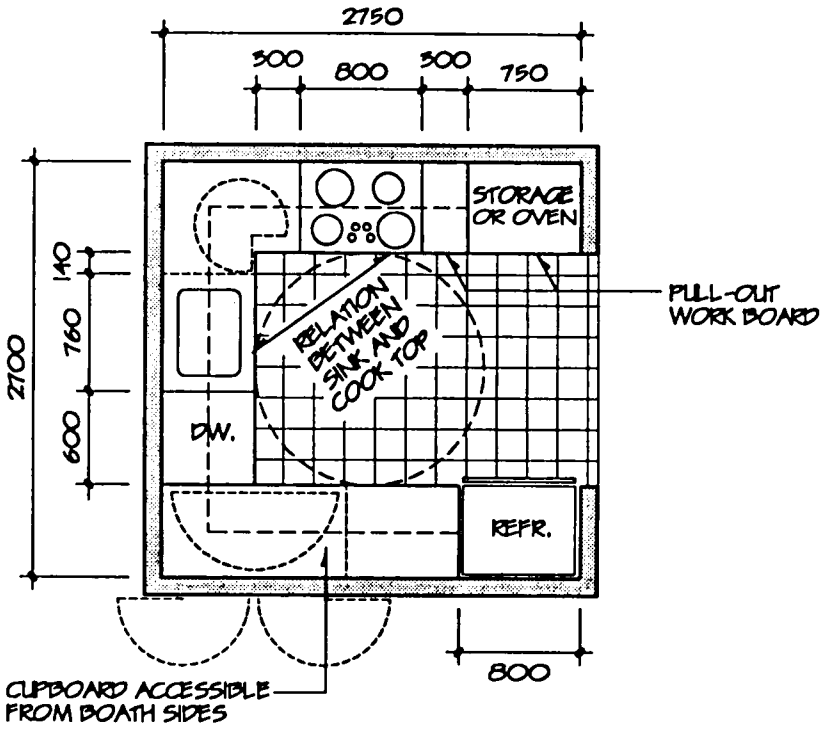

"U" SHAPED KITCHEN

☐ **Emergency measures**

12. portable extinguisher

☐ **Ease of use**

13. counter 880 mm from floor level (instead of 915 mm) to meet the needs of children as well as persons who work in a seated or a standing position
14. upper cabinets at 360 mm above the counter
15. pull-out work surfaces providing a minimum 680 mm clearance underneath
16. hinges opening 180° on lower cabinet doors and on full-height vertical cabinets
17. D-shaped handles on cabinets and drawers
18. adjustable shelves in storage areas
19. fully extensible drawers
20. rotating shelves (lazy Susan) in corner cabinets
21. lever faucet at sink
22. light switch at 1050 mm from floor level
23. electric wall outlets above the counters at 1050 mm from floor level
24. electric outlets with breakers on the counter edge, child-proof
25. ventilator hood controls on the counter edge: separate switch for light and fan

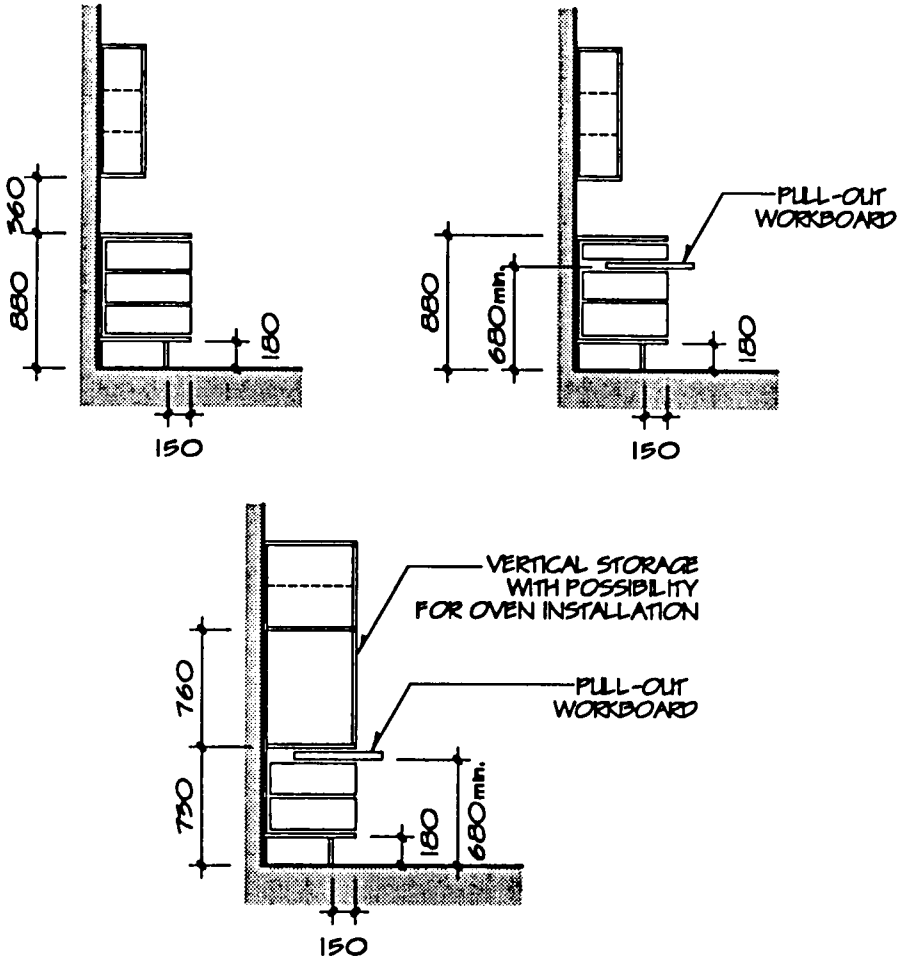

☐ Adaptability

26. moveable storage module under the sink
27. potential for replacing the electric range by a cook top with knee clearance underneath
28. potential for a built-in conventional or microwave oven in full-height vertical storage: electric outlet provided inside storage for this purpose

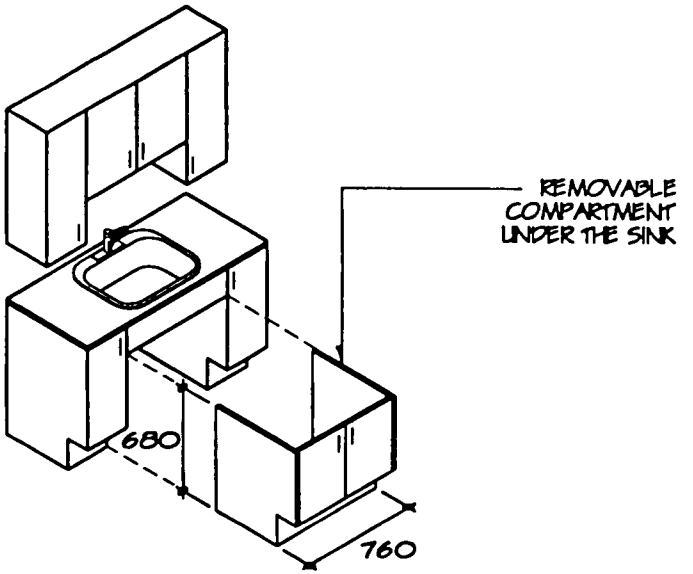

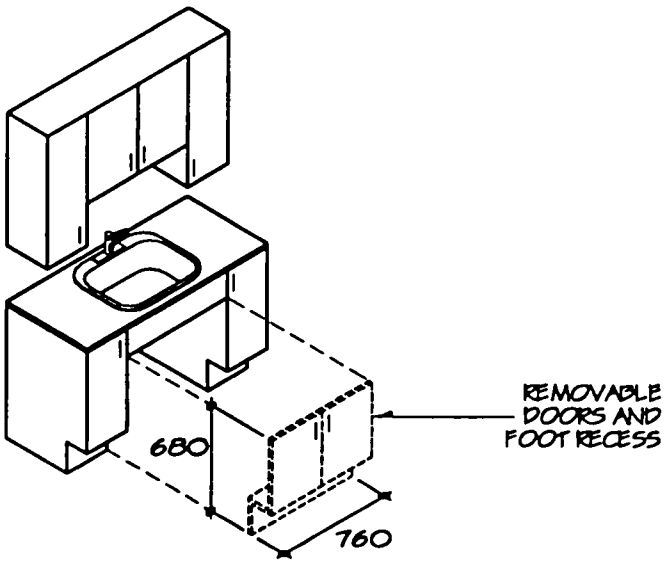

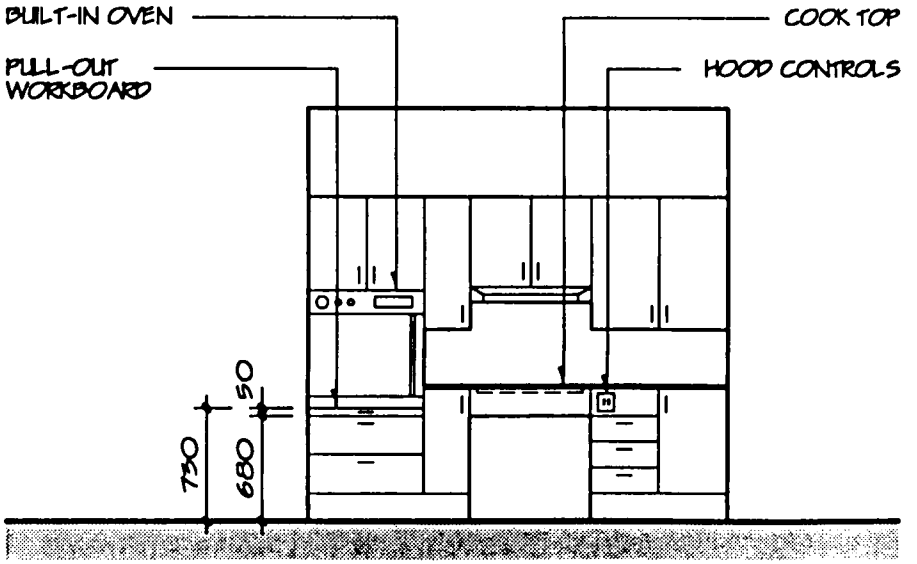

OTHER EXAMPLES OF KITCHEN LAYOUT

The following variations are examples of kitchen layouts offering accessibility and adaptability characteristics. They provide the same performance as the basic kitchen layouts. They allow for easy access and manouevering space in front of the appliances, work surface and storage areas.

They present examples of different situations, depending on the general configuration of the unit and on the type of housing provided.

☐ Kitchen with eating counter

A built-in eating counter as part of the kitchen makes it possible to eat light meals there occasionally.

The counter should have a clearance 680 mm high and 450 mm deep for a minimum length of 760 mm.

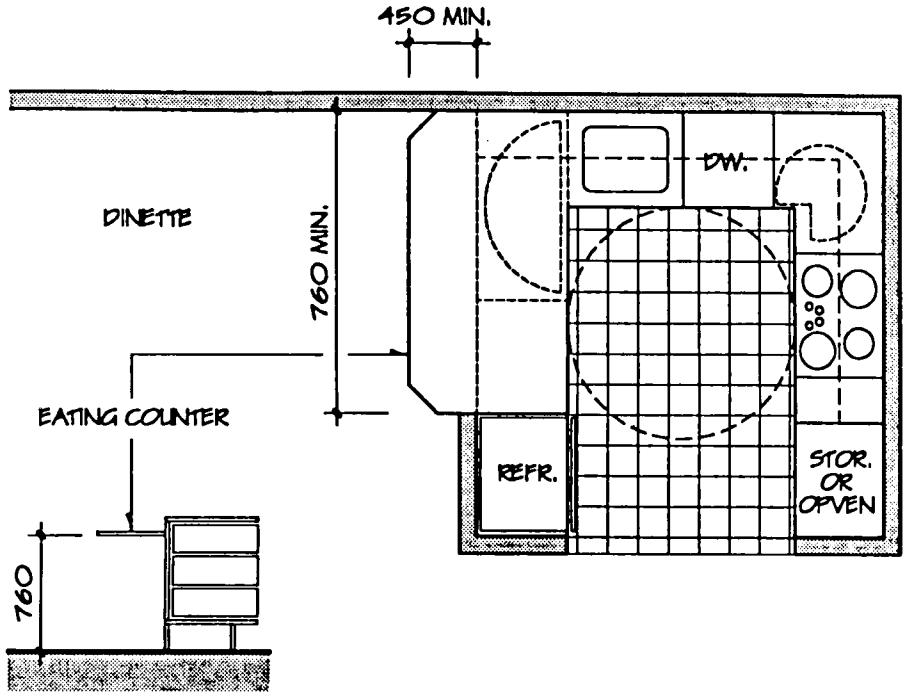

☐ Kitchen with serving hatch

Adding a serving hatch reduces the manouvering required between the eating corner and the kitchen and may allow for natural light to come from the living area.

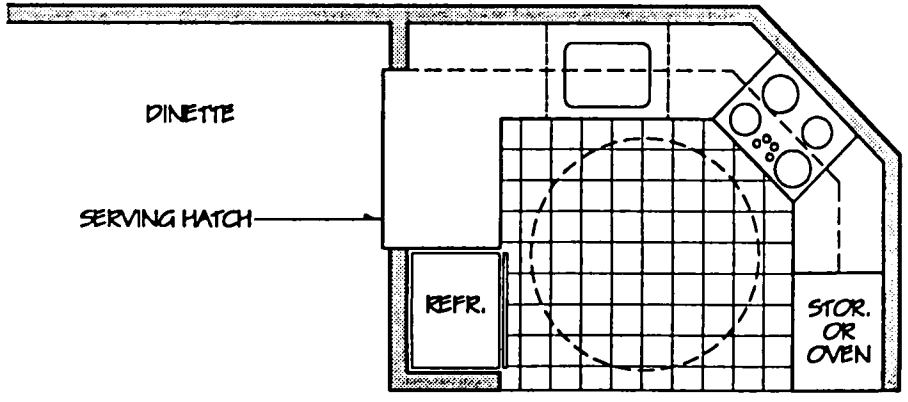

☐ Kitchen with island

An island incorporating a cook top or a sink is not an ideal layout since it separates the cooking surface from the sink and makes it necessary to carry food and utensils to and fro.

A central kitchen island may be useful as a work surface or an eating counter.

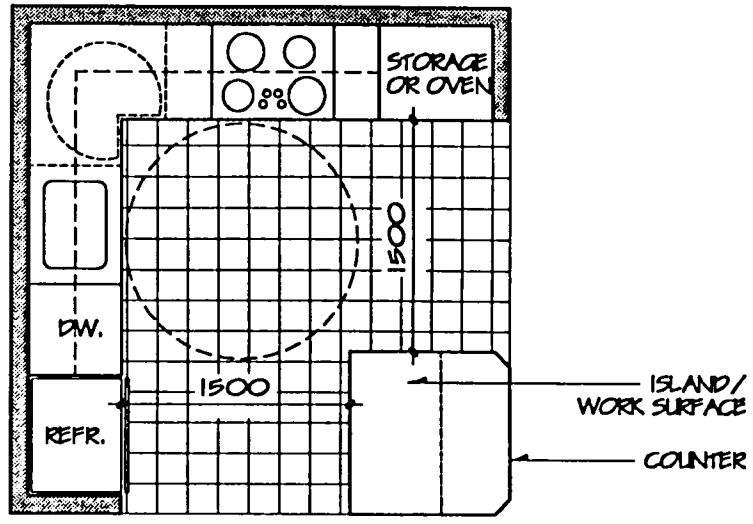

19. BATHROOM

In order to assure the residents' independence and privacy, the equipment and facilities in the bathroom must be laid out in an optimal manner.

Given the activities which occur in the bathroom, particular attention must be paid to the functional as well as safety aspects of this space.

GUIDELINES

In all dwelling units, **at least one bathroom** must respect barrier-free and adaptability characteristics. This bathroom must be **located near an accessible bedroom.**

In a dwelling unit with more than one floor, **at least one barrier-free and adaptable bathroom or washroom must be located on the same floor as the day-time space** (living room, kitchen, dining room). This requirement makes it possible for any visitor to use the toilet.

In addition, the design should facilitate creating a bedroom and a bathroom, which are barrier-free, on the main entry floor, should the need arise.

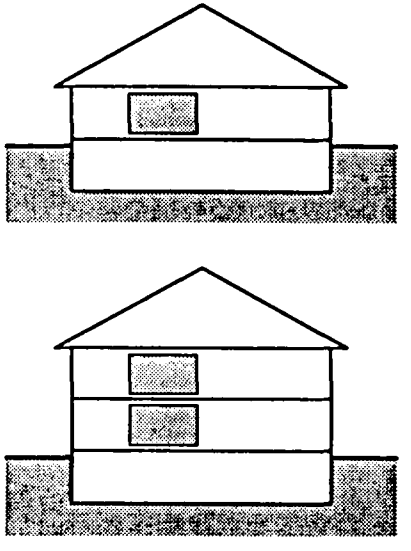

LOCATION

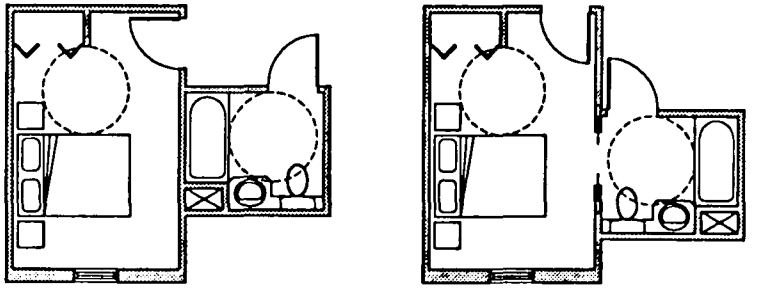

PROXIMITY OF BEDROOM-BATHROOM

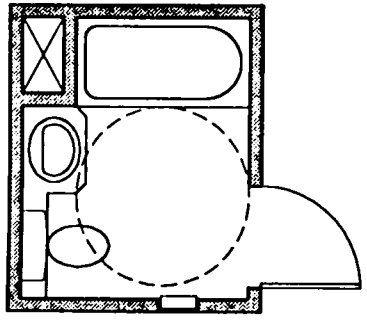

BASIC MODEL

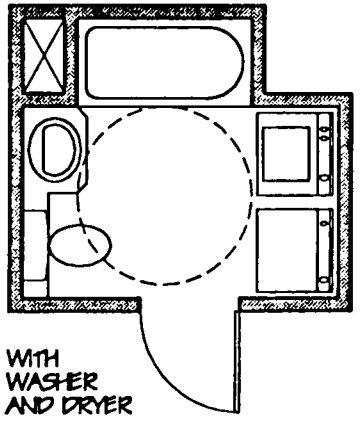

WITH WASHER AND DRYER

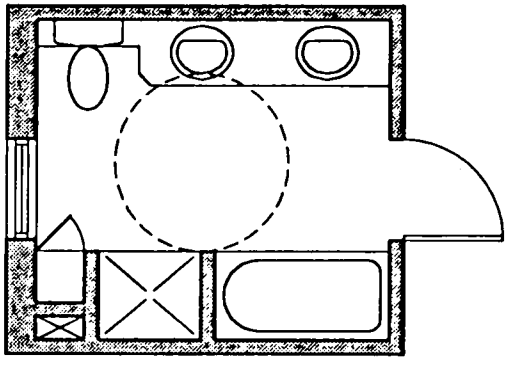

WITH SHOWER AND TWO WASHBASINS

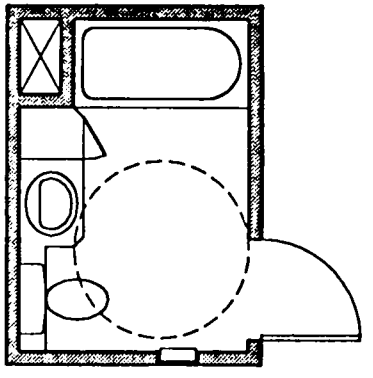

WITH STORAGE AREA

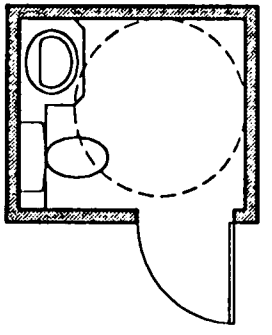

WASHROOM

ALTERNATIVES

BATHROOM: BASIC MODEL
Performance criteria and characteristics

☐ Access and turning space

1. door 865 mm wide
2. bevelled threshold 13 mm maximum
3. turning space 1500 mm diameter, free of all equipment
4. clear space along the total length of the bathtub
5. washbasin counter with potential for providing knee-space clearance 680 mm high and 760 mm wide

☐ Functional safety

6. slip-resistant floor
7. washbasin with offset drain and insulated trap located at the back, parallel to the wall
8. pressure balancing device on bathtub/shower faucets
9. bathtub with slip-resistant bottom
10. lighting 200 lux
11. directed lighting 250-500 lux at the washbasin

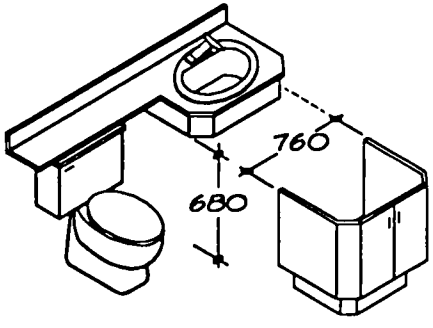

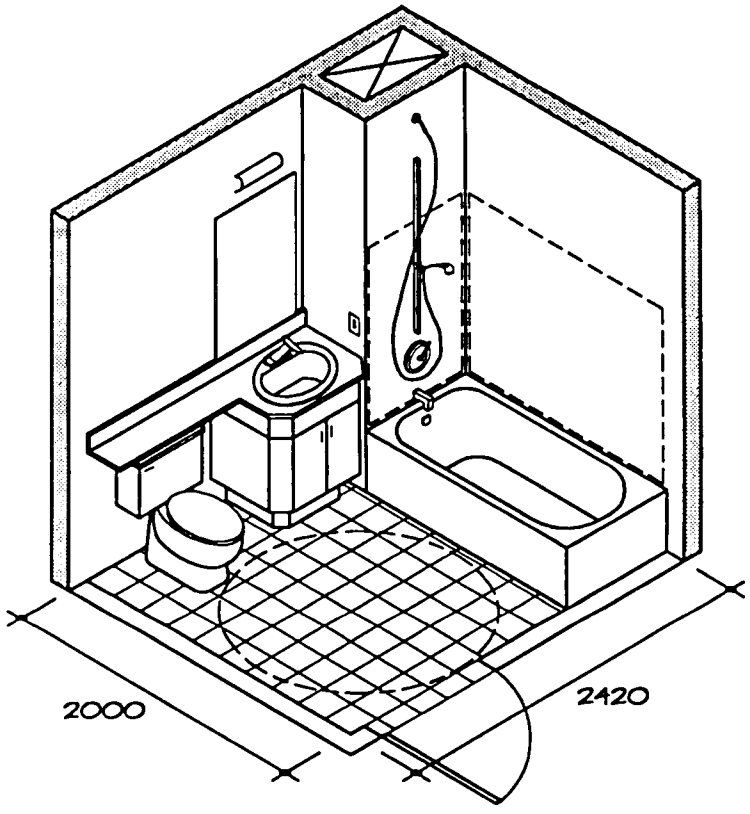

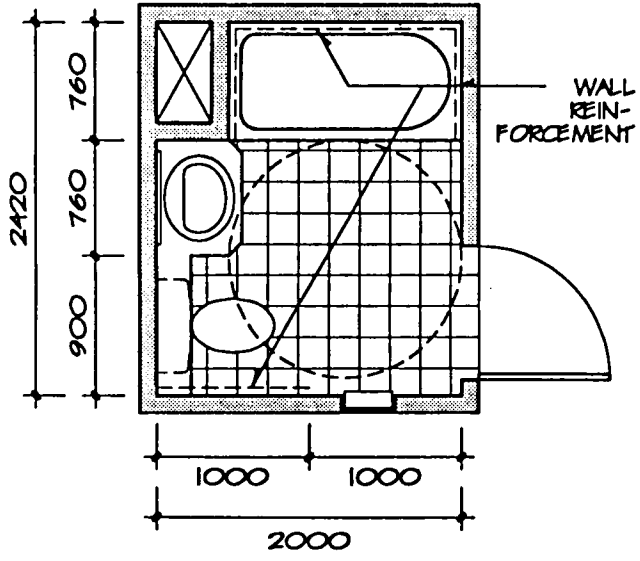

☐ Ease of use

12. lever door handle, lock can be unlocked from the outside
13. elongated toilet 400 mm high, its central axis 460 mm from a side wall
14. lever faucet on washbasin
15. lever faucet on bathtub, at the head of the bathtub, at a maximum height 850 mm from floor level
16. shower lever easy to manipulate
17. mirror 600 mm x 900 mm, at 920 mm from floor level
18. lower edge of medicine cabinet at 1000 mm from floor level
19. built-in soap holder at bathtub, without handle
20. towel rack at 1050 mm from floor level
21. light switch at 1050 mm from floor level
22. thermostat at 1200 mm from floor level
23. electric outlet with breaker on wall adjacent to counter, at 1050 mm from floor level
24. D-shaped handles on storage
25. where provided, hand-held shower with flexible hose 1800 mm long, attached to wall-mount 1000 mm long (not intended for use as a grab-bar) with upper end at 1950 mm from floor level

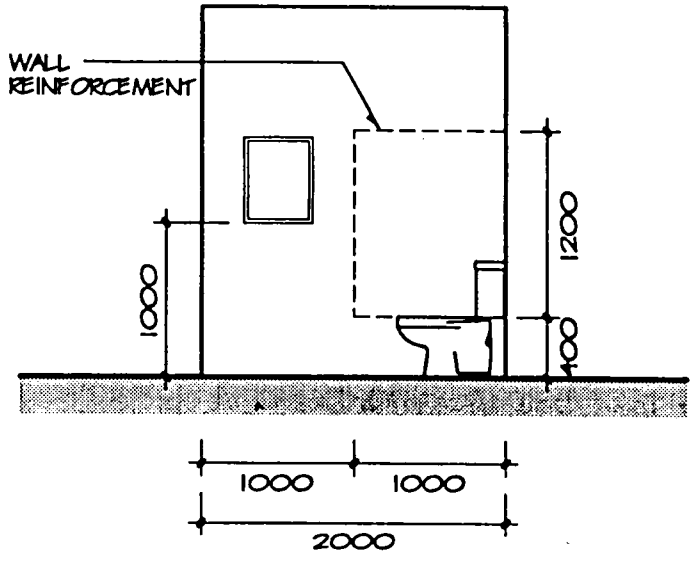

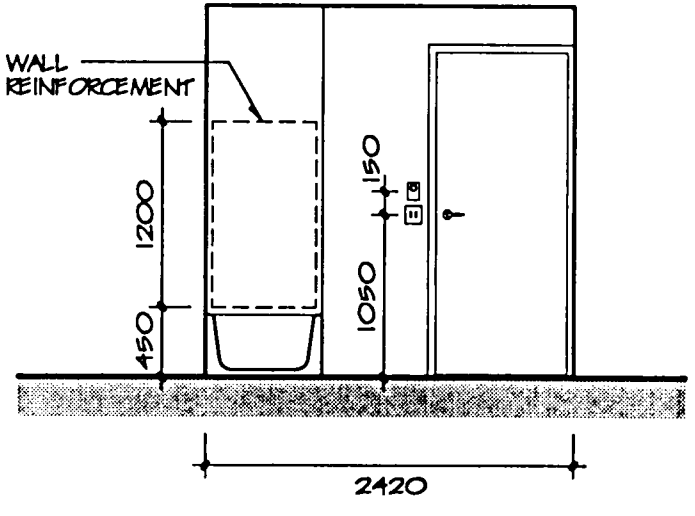

☐ Adaptability

26. 16 mm plywood wall reinforcement on wood or metal frame walls for eventual installation of grab bars:
    - for a height of 1200 mm on walls around the bathtub, starting at the top of the bathtub
    - for a height of 1200 mm on walls behind and beside the toilet, starting at 450 mm from floor level
27. moveable storage module under the washbasin counter to permit the provision of knee-space clearance

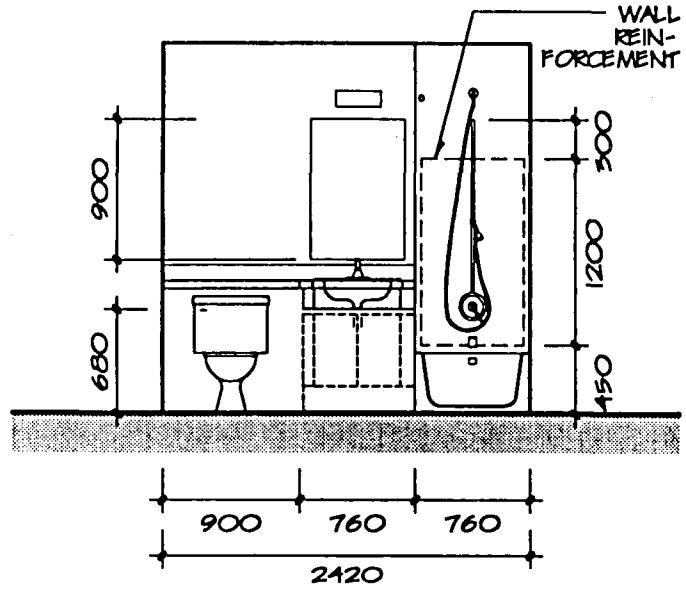

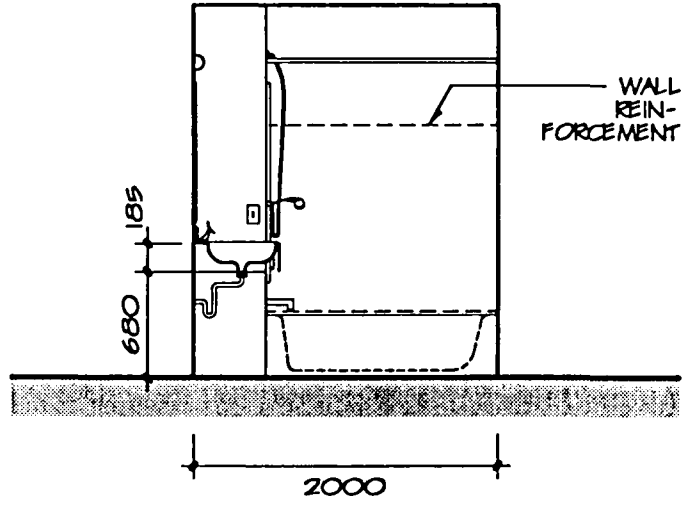

OTHER EXAMPLES OF BATHROOM LAYOUT

The following alternatives are examples of layouts offering barrier-free and adaptability characteristics. They provide the same performance as the basic bathroom.

They present examples for different contexts, depending on the general configuration of the unit and of the type of housing where it is found.

They allow for safe and easy access to the various facilities.

The layout of the equipment must provide for a full-length clearance along the total length of the bathtub as well as for a turning space 1500 mm in front of each element.

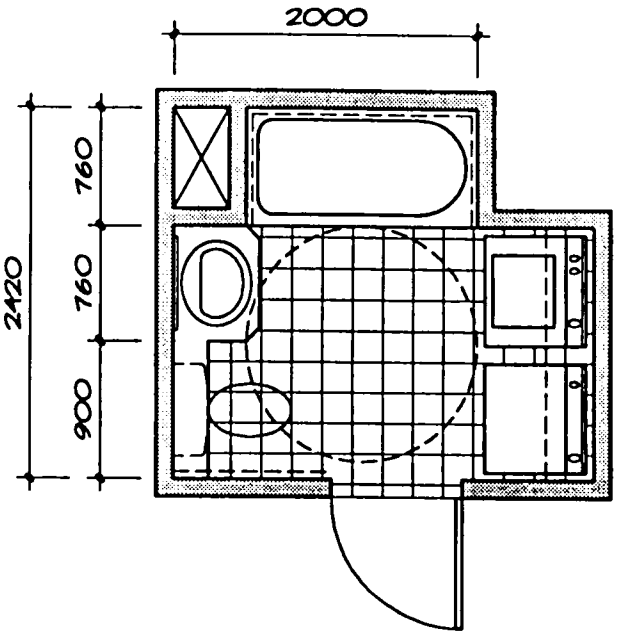

☐ Bathroom with washer and dryer

The turning space provided in the basic bathroom serves also the washer and dryer. The additional space required, therefore, corresponds only to the space necessary for the appliances.

The storage shelves above the appliances, installed at 1350 mm from floor level, make the lower shelf reachable.

Where they exist, folding doors in front of the appliances must open fully to provide unobstructed frontal clearance.

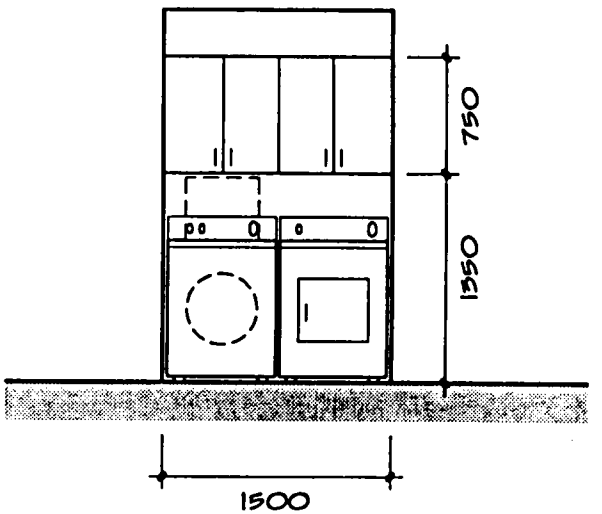

☐ Bathroom with shower compartment, two wash-basins and a window

This bathroom may meet the needs of a family. Clearance in front of the window allows access to it. The window opening mechanism, at 1050 mm from floor level, should be easy to manipulate.

Under one of the washbasins, a moveable storage module can easily create a knee-space clearance 680 mm high and 760 mm wide. The washbasin drain is offset and the trap is insulated, located at the back.

Both washbasins have lever faucets, 75 mm long and easy to operate.

The shower stall shown here is not accessible to a person with mobility limitations. It is possible to replace it with a prefabricated accessible shower stall installed in the combined space occupied by the shower and linen closet.

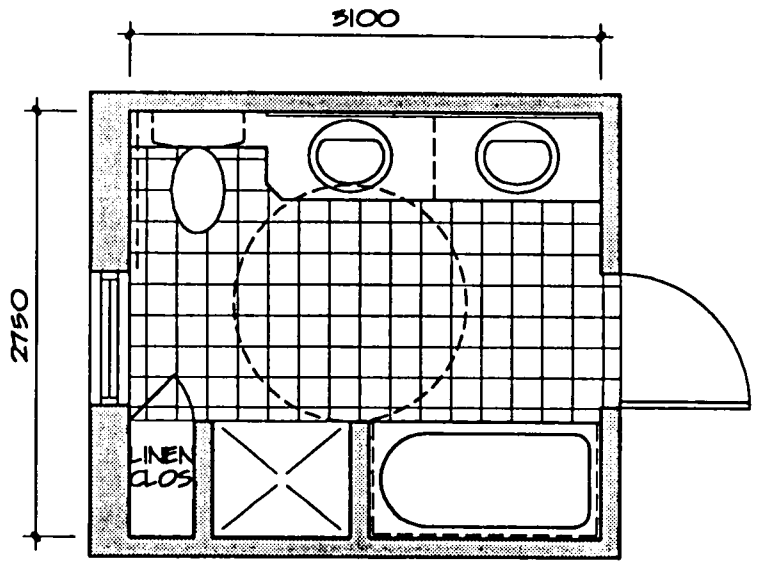

☐ Bathroom with storage space

A full-height cupbaord in the bathroom makes it possible to store linen and toilet products normally used in the bathroom.

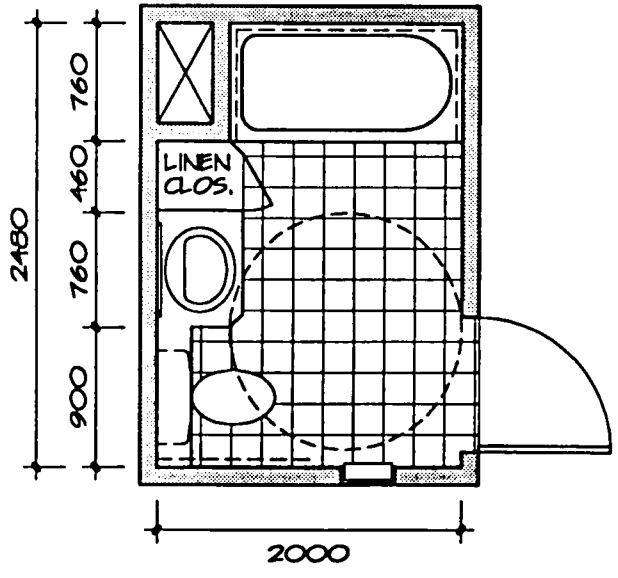

☐ Washroom

This washroom serves those using the day-time spaces, particularly where no barrier-free and adaptable bathroom is located on the same level.

The barrier-free and adaptable washroom must present the same characteristics as the basic bathroom, including the turning space.

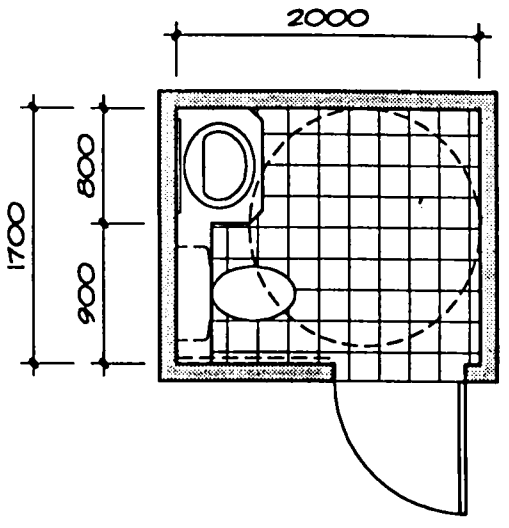

20. BEDROOM

The bedroom is an area with little fixed equipment. It must be large enough, however, to allow for an adequate layout of the furniture.

GUIDELINES

The dwelling unit must provide at least one bedroom with barrier-free and adaptability characteristics, and this bedroom must be located near a barrier-free bathroom.

In a dwelling unit which comprises more than one floor, the design should facilitate creating a bedroom and a bathroom on the ground floor or on the main entry level, should the need arise.

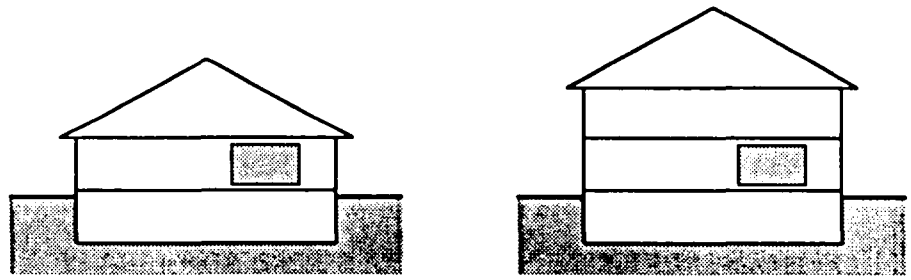

LOCATION

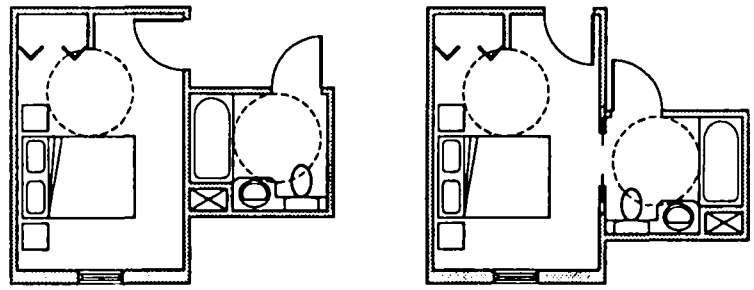

PROXIMITY OF BEDROOM-BATHROOM

Accessible bedrooms offer adequate turning space in order to move around the bed and to have access to the storage area and to the window.

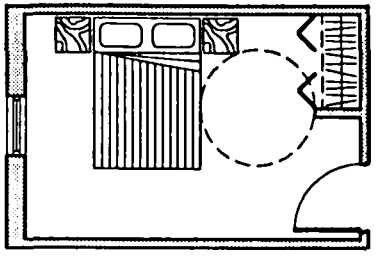

WITH DOUBLE BED

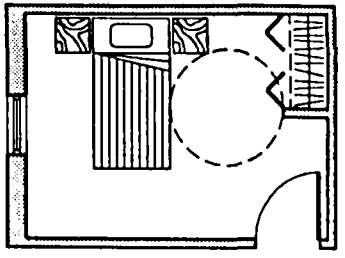

WITH SINGLE BED

BASIC MODELS

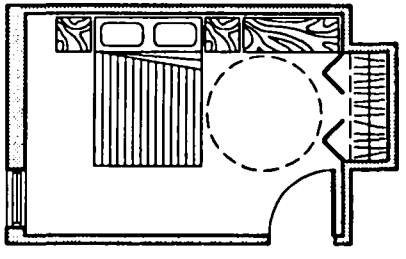

WITH FURNITURE

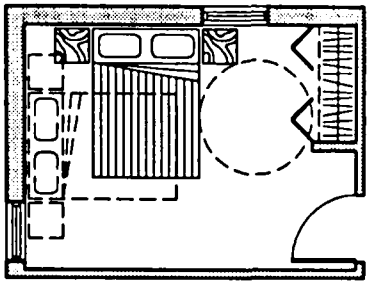

BED OPPOSITE STORAGE AREA

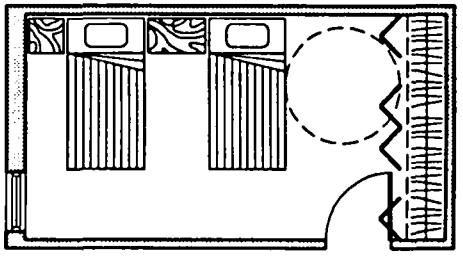

WITH TWO SINGLE BEDS

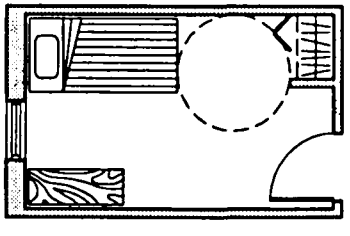

SECONDARY BEDROOM

ALTERNATIVES

BEDROOM: BASIC MODELS
Performance criteria and characteristics

The models presented here show minimum dimensions for a bedroom with one bed and built-in storage space.

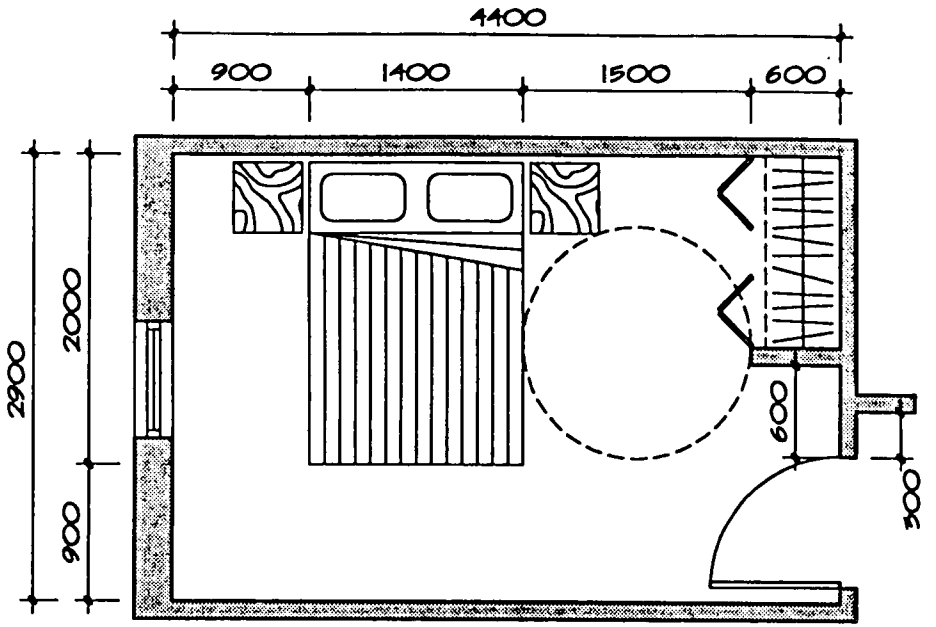

☐ **Access and turning space**

1. door 865 mm wide
2. no threshold
3. turning space 1500 mm diameter near the bed and in front of the storage space
4. minimum 900 mm clearance on both sides and at the foot of the bed
5. wall clearance 600 mm on the handle edge of door

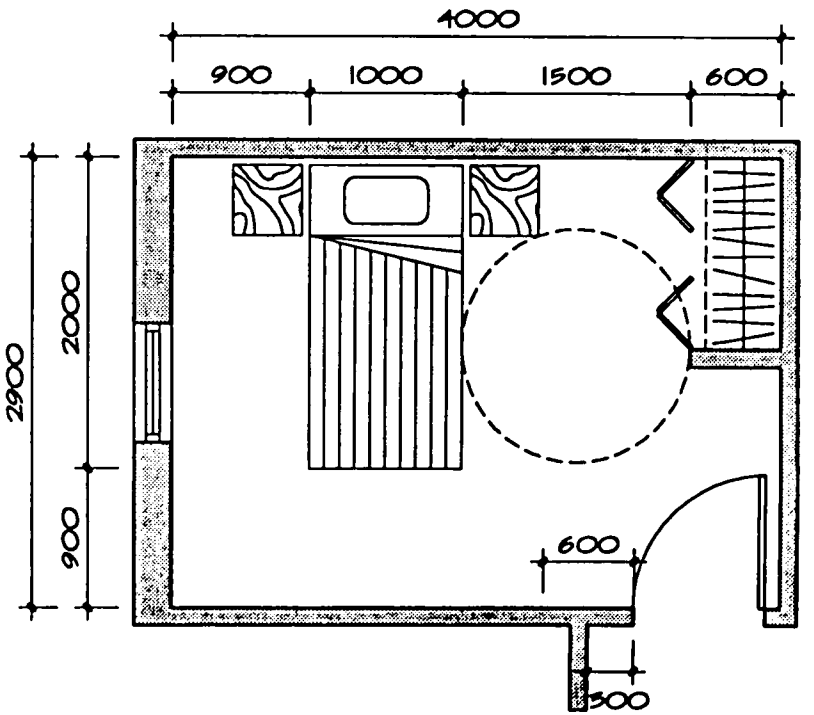

☐ **Functional safety**

6. ceiling light fixture
7. one electric outlet connected to a switch near the door and to a switch near the bed
8. telephone jack close to an electric outlet near the bed

☐ Ease of use

9. lever door handle
10. light switch at 1050 mm from floor level
11. wall thermostat at 1200 mm from floor level
12. electric outlet at 450 mm from floor level
13. sufficient number of electric outlets to allow for a flexible layout
14. lighting 200 lux minimum in the clothes closet, switch on the outside
15. D-shaped handles on clothes closet doors
16. window sill at 750 mm maximum from floor level
17. window opening device at 1050 mm from floor level and at least 300 mm from a wall corner
18. tandem locking mechanism for those windows requiring two vertical locks

☐ Adaptability

19. in the clothes closet, two positions for the rod and shelf: 1200 mm and 1500 mm from floor level

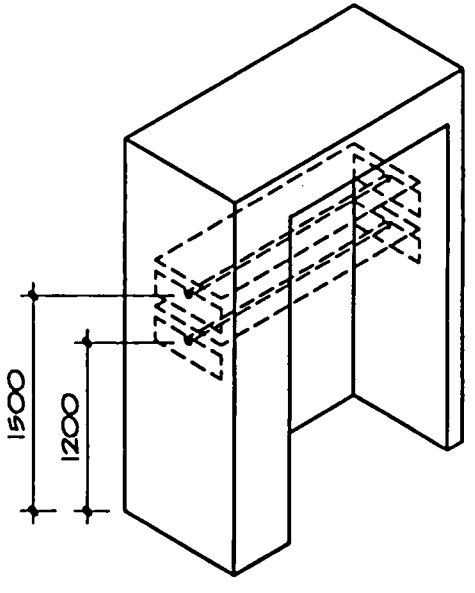

OTHER EXAMPLES OF BEDROOM LAYOUT

The following alternatives are examples of bedrooms providing barrier-free and adaptability characteristics and the same performance as the basic model.

They allow for different layouts which may more adequately meet the needs and tastes of various consumers.

The furniture layout must always respect the turning space near the bed and storage area, as well as the minimum 900 mm clearance around the bed and access to the window.

☐ **Bedroom to enable positioning the furniture on the wall opposite the storage space**

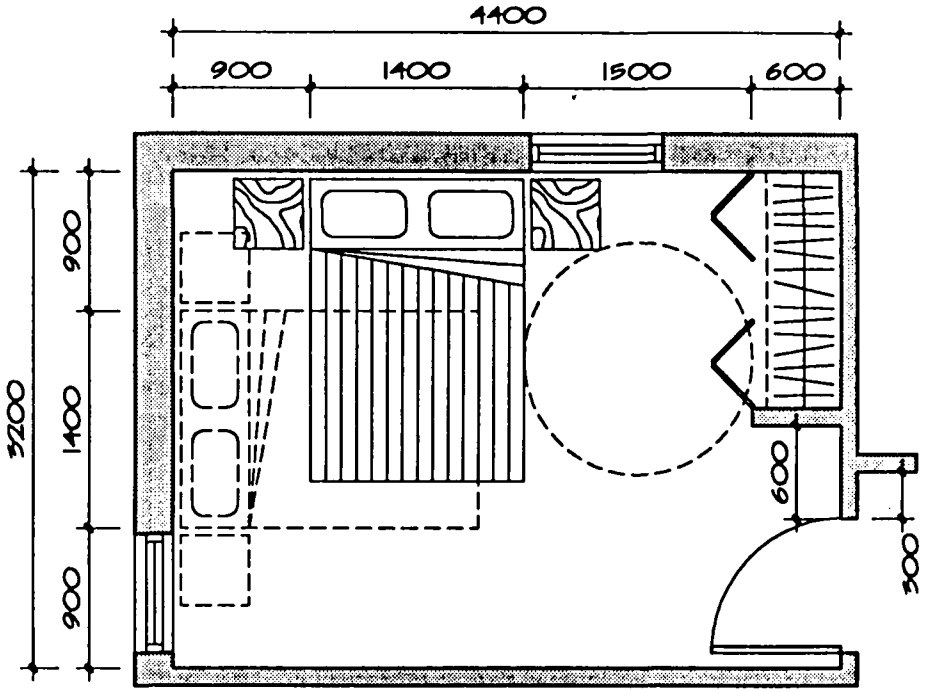

☐ **Bedroom with chest of drawers**

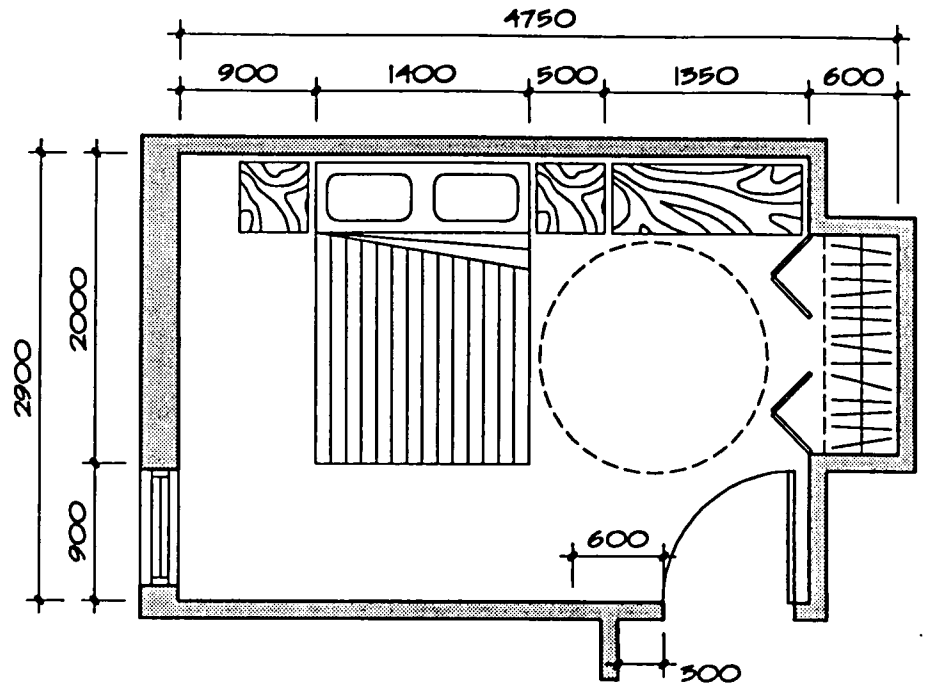

☐ **Bedroom with two single beds**

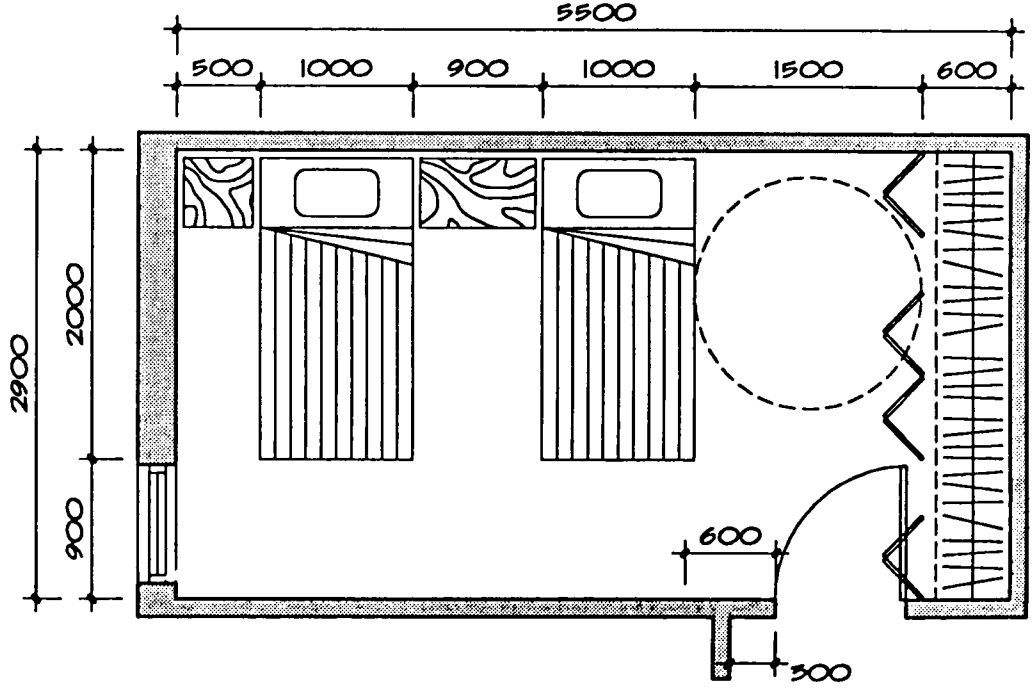

☐ Single bedroom

This example illustrates how accessibility can be achieved in a small bedroom, designed to accommodate a single bed, by respecting the following conditions:

- turning space near the storage area
- minimal 900 mm clearance on one side of the bed
- access to the window
- wall clearance 600 mm at the handle edge of the door

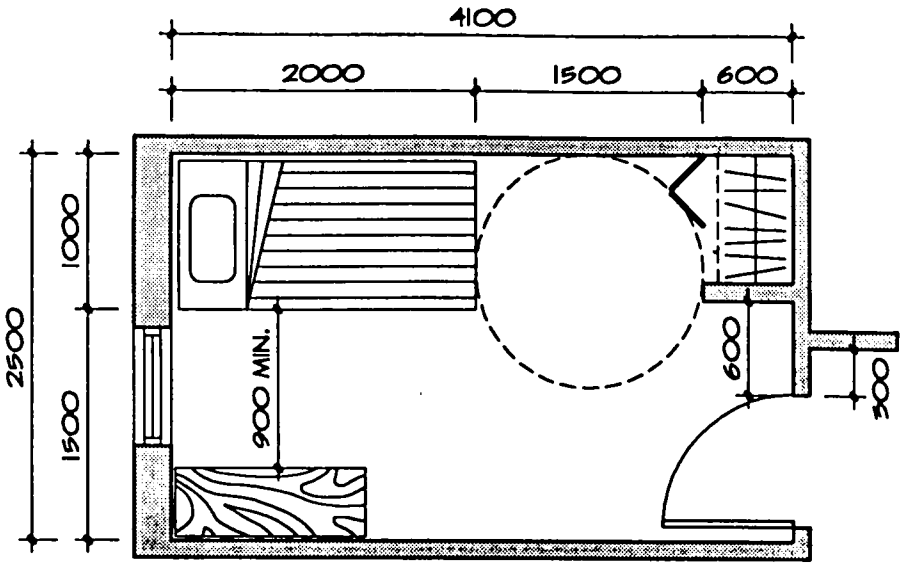

21. LIVING ROOM

GUIDELINES

The living room is an area with few fixed elements. It must offer sufficient space, however, to allow for adequate layout of furniture and circulation. Often, the living area communicates directly with a balcony or terrace.

Performance criteria and characteristics

The living room must be barrier-free. It should be on a single level and have no change in level with the adjacent rooms.

The living room is an area where windows are particularly important. The positioning of the window sills and of the horizontal mullions in the windows should respect the angle of vision. A large window should be divided into smaller sections which are easy to open.

☐ **Access and turning space**

1. minimum dimensions of the living room 3000 mm x 3800 mm
2. door 865 mm wide or clear passage of at least 810 mm
3. no threshold at interior doors

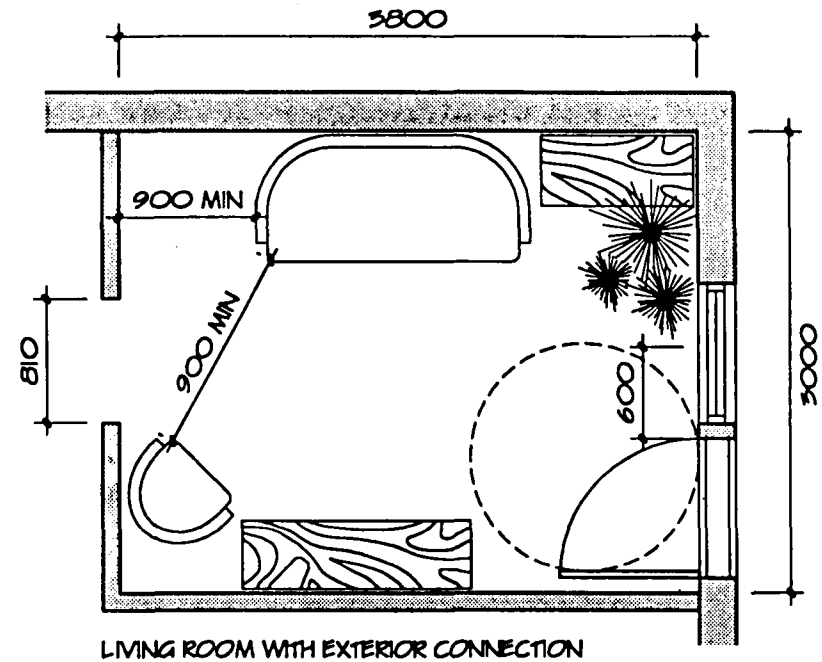

LIVING ROOM WITH EXTERIOR CONNECTION

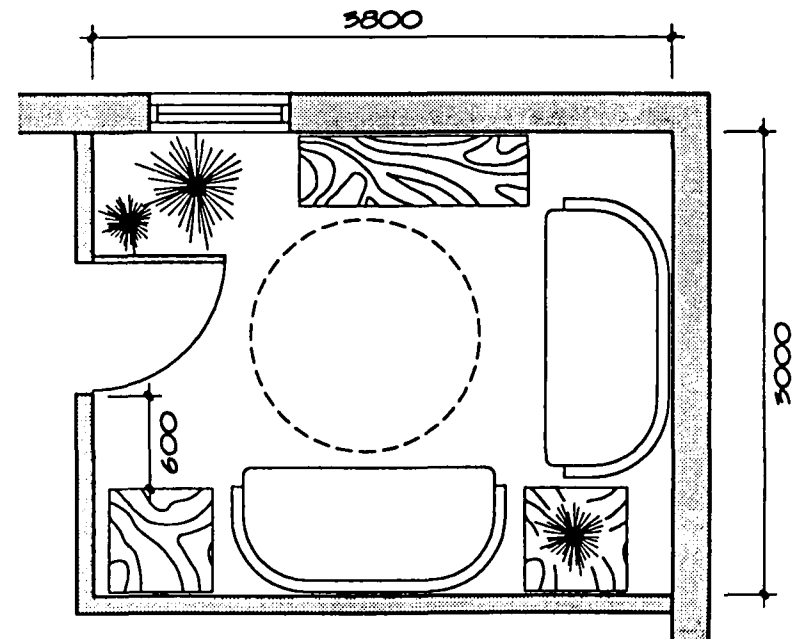

LIVING ROOM WITHOUT EXTERIOR CONNECTION

4. bevelled threshold 13 mm maximum at exterior doors, if they exist
5. minimum 900 mm clearance to be able to move around furniture
6. wall clearance 600 mm at the handle edge of swing doors, in the pull direction
7. in situations where the living room adjoins a balcony or terrasse, 1500 mm diameter turning space near the door

☐ Functional safety

8. ceiling light fixture
9. electric outlet connected to a switch near the entry
10. telephone jack close to an electric outlet

☐ Ease of use

11. lever door handles
12. light switches at 1050 mm from floor level
13. wall thermostat at 1200 mm from floor level
14. electric outlets at 450 mm from floor level
15. sufficient number of electric outlets to allow for flexible layout
16. window sill at 750 mm maximum from floor level
17. window opening device easy to manipulate
18. tandem locking mechanism for windows requiring two vertical locks

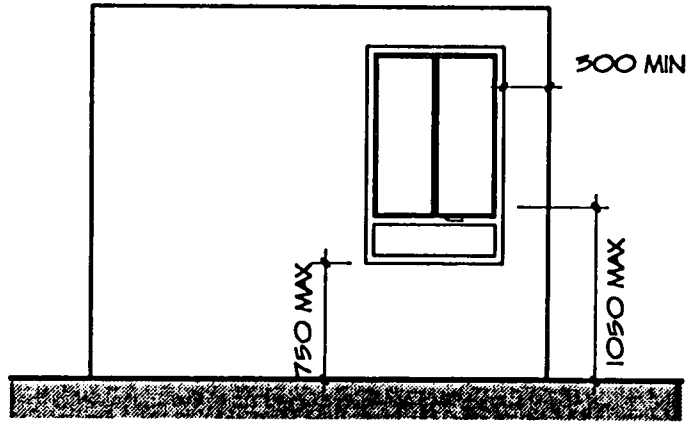

22. BALCONY

GUIDELINES

The balcony may communicate directly with the kitchen, the living room or a bedroom.

Provision must be made for space within the unit to access the balcony door.

Performance criteria and characteristics

☐ **Access and turning space**

1. swinging or sliding door with minimum clear opening of 810 mm
2. bevelled threshold 13 mm maximum
3. turning space 1500 mm diameter on the balcony, beyond the door swing
4. turning space 1500 mm diameter in front of the door inside the unit

☐ **Functional safety**

5. exterior lighting 100 lux

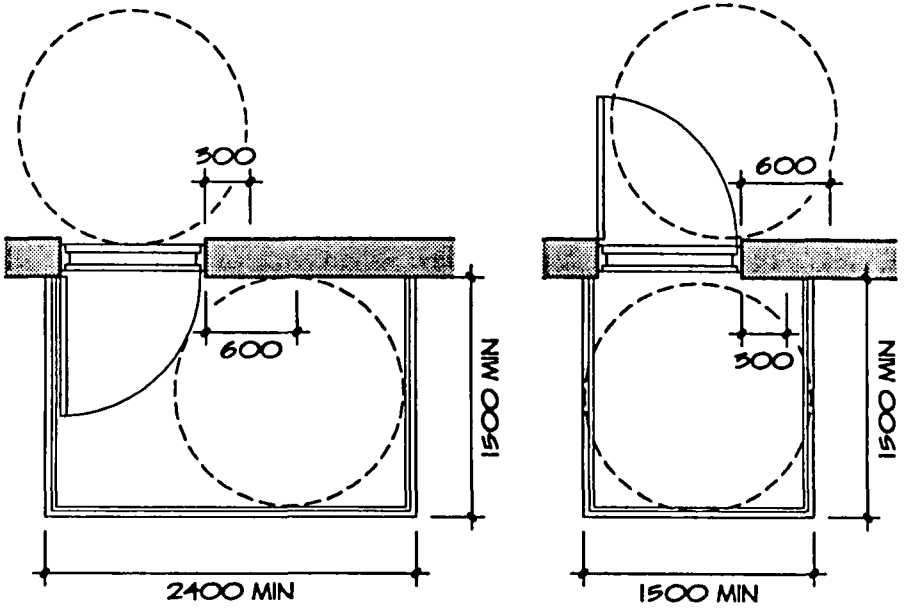

SWINGING DOOR OPENING TO EXTERIOR

SWINGING DOOR OPENING TO INTERIOR

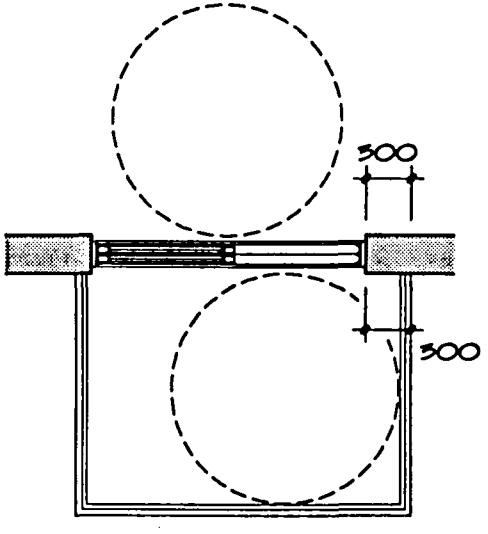

SLIDING DOOR

☐ Ease of use

6. railing and handrail that do not interfere unduly with the view
7. lever door handle
8. lock at 1050 mm from floor level
9. light switch in the living area, at 1050 mm from floor level

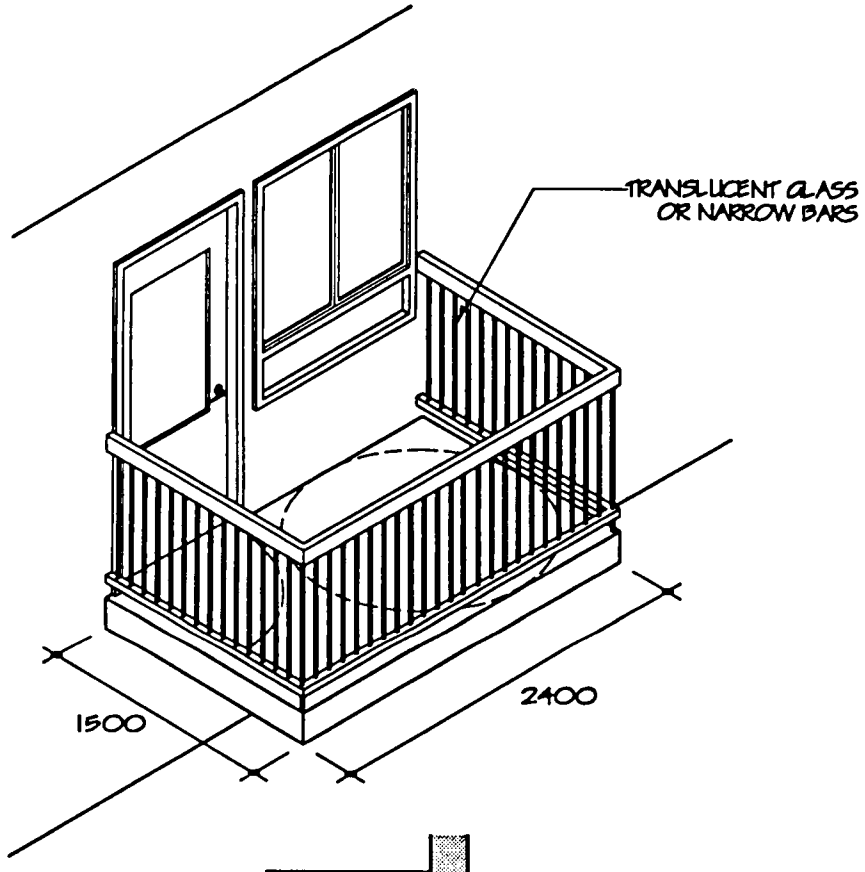

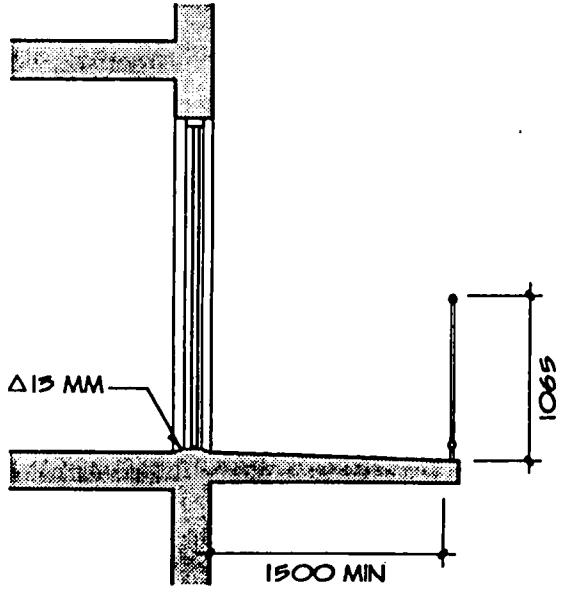

23. STORAGE SPACE

The dwelling unit can include storage space, a linen closet and clothes closets at the entry and in the bedrooms.

GUIDELINES

Storage spaces must be easily accessible.

In apartment dwellings, it is preferable to have a storage space outside the unit for seasonal articles (see Theme 11. "Common storage").

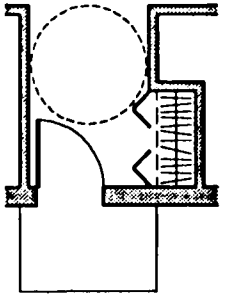

CLOTHES-CLOSET AT ENTRY

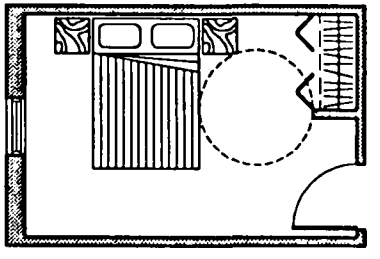

CLOTHES-CLOSET IN BEDROOM

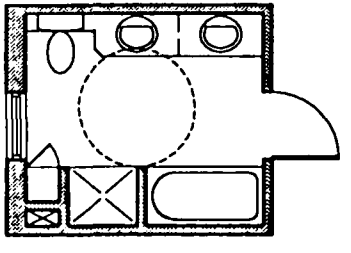

LINEN CLOSET

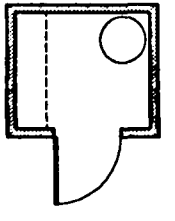

STORAGE ROOM

BASIC MODELS

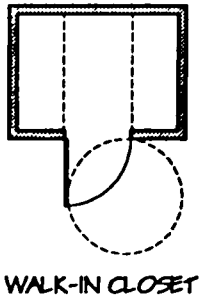

WALK-IN CLOSET

ALTERNATIVE

STORAGE SPACE: BASIC MODELS
Performance criteria and characteristics

Accessible and adaptable storage space includes the following general characteristics:

☐ **Access and turning space**

1. Dimensions in front of storage or clothes closet related to the type of door used:
   a) where the clearance in front of the storage space is between 900 mm and 1500 mm wide, sliding doors must be chosen. Provision must be made for a 300 mm minimum clearance along the wall on both sides of the storage area. Door opening width may vary.
   b) where there is a 1500 mm diameter turning space in front of the storage space, swinging, sliding or folding doors may be used, with a minimum clear opening of 810 mm. If a sliding door model has a clear opening less than 810 mm, provision must be made for a 300 mm clearance along the wall on both sides of the storage area.

☐ **Functional safety**

2. lighting 200 lux inside the storage area
3. switch outside the storage area at 1050 mm from floor level

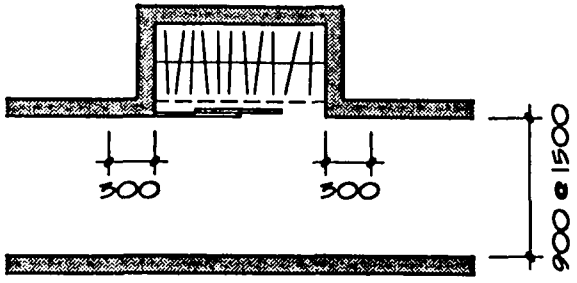

LESS THAN 1500 MM CLEARANCE
SLIDING DOORS
300 MM MINIMUM CLEARANCE ALONG THE WALL
VARIABLE DOOR OPENING

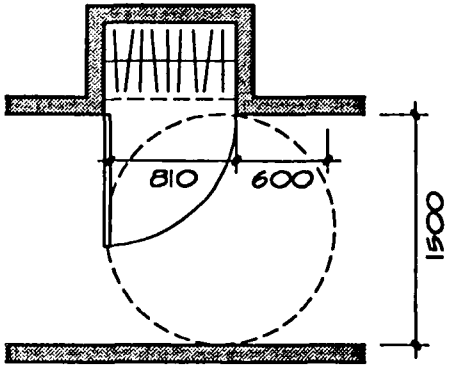

1500 MM CLEARANCE
SWINGING DOOR
810 MM MINIMUM CLEAR
DOOR OPENING

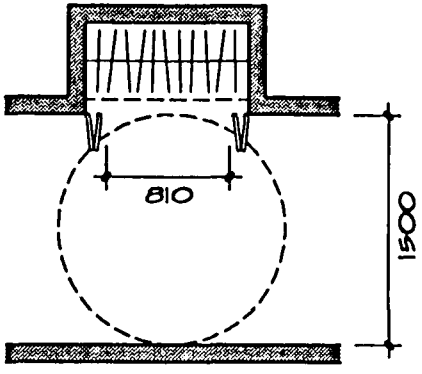

1500 MM CLEARANCE
FOLDING DOORS
810 MM MINIMUM CLEAR
DOOR OPENING

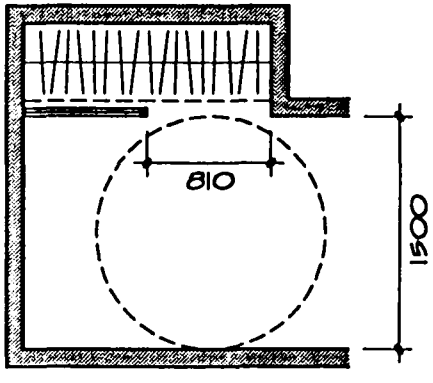

1500 MM CLEARANCE
SLIDING DOORS
810 MM CLEAR DOOR OPENING

☐ **Ease of use**

4. lever handle for a swinging door
5. D-shaped handle for a folding or sliding door

In addition to the general characteristics mentioned above, accessible storage spaces shall have the following the specific characteristics:

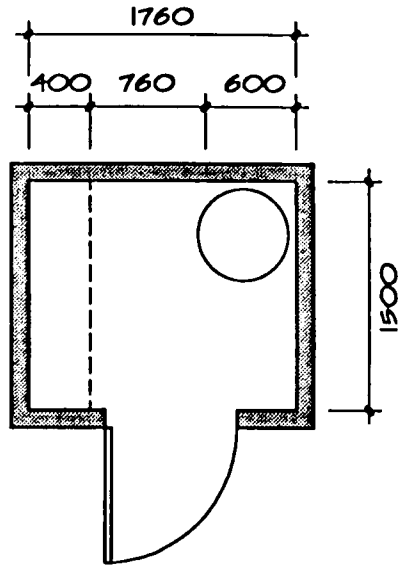

STORAGE ROOM

6. swinging door 865 mm wide, opening to the outside
7. no threshold

LINEN CLOSETS

8. linen closet within, or close to, the bathroom

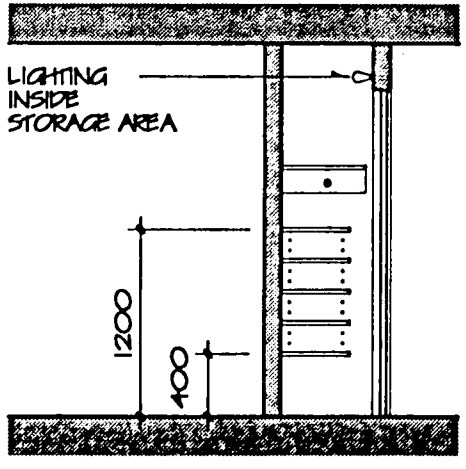

CLOTHES CLOSET

9. rod and shelf adjustable in two positions: 1200 mm and 1500 mm from floor level

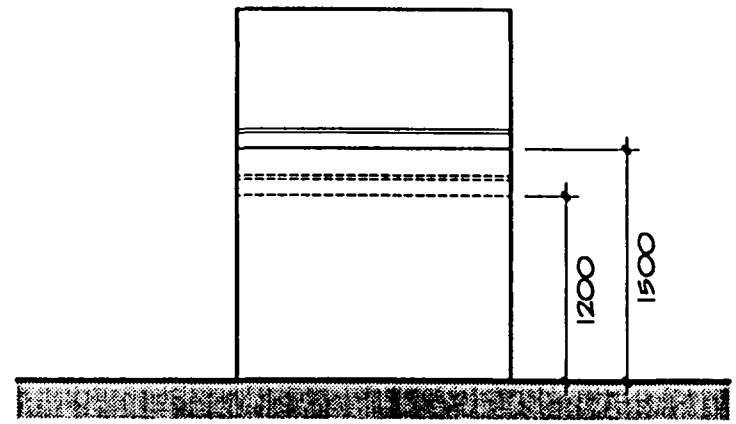

WALK-IN CLOTHES CLOSET

10. swinging door 865 mm wide, opening to the outside, or folding or sliding door providing a clear opening of 810 mm
11. minimum 900 mm clear width on the inside
12. rod and shelf adjustable in two positions: 1200 mm and 1500 mm from floor level

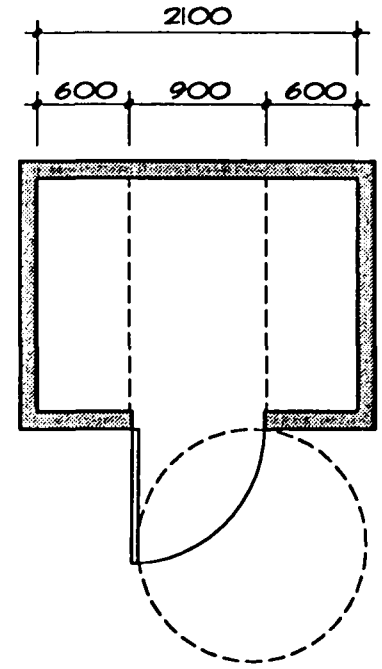

24. LAUNDRY SPACE

Adequate layout of the laundry space and the appropriate choice of appliances simplify the execution of tasks performed there.

GUIDELINES

In a housing unit comprising more than one level, it is preferable that the laundry space be located on the main floor of the unit.

In residential buildings, providing an individual laundry space within each unit is desirable. This space can be incorporated within another room (bathroom, kitchen, corridor) or left as a separate space.

An accessible laundry implies that there is sufficient clearance to manoeuver in front of the appliances. Generally, a dryer placed on top of a washer or vice versa does not meet the desired performance criteria.

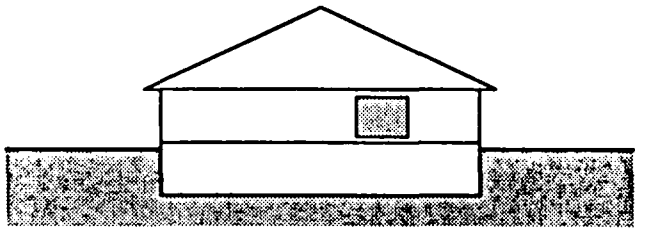

LOCATION

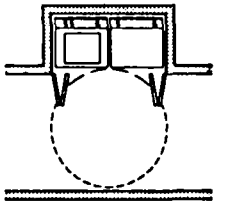

IN A CORRIDOR

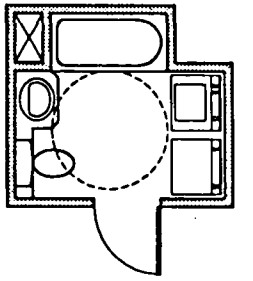

IN THE BATHROOM

BASIC MODELS

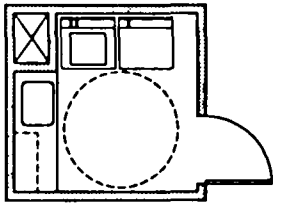

LAUNDRY ROOM

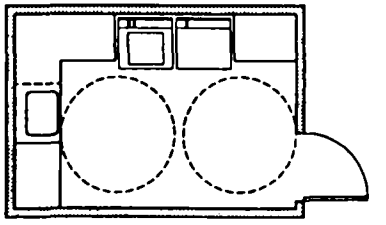

LAUNDRY AND STORAGE ROOM

ALTERNATIVES

LAUNDRY SPACE: BASIC MODEL
Performance criteria and characteristics

☐ Access and turning space

1. turning space 1500 mm diameter in front of appliances
2. folding doors to allow a complete horizontal clearance in front of appliances (if necessary, with hinges opening 180°)

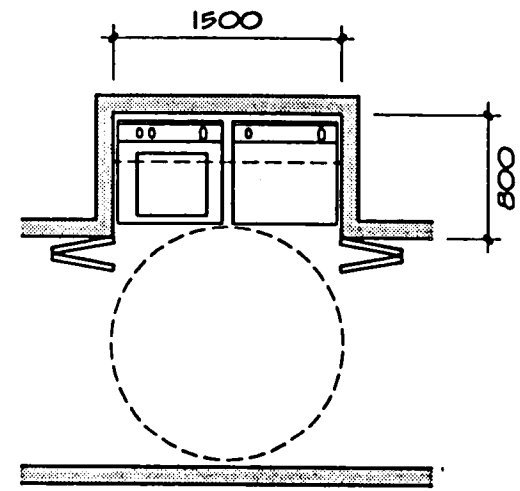

☐ Functional safety

3. directed lighting of 250 lux on appliances

☐ Ease of use

4. D-shaped handles
5. electric switch at 1050 mm from floor level, outside the laundry space
6. storage shelves above the appliances at 1350 mm from floor level in order to reach the lower shelf

OTHER EXAMPLES OF LAUNDRY LAYOUT

An accessible room reserved for the laundry shall have the following characteristics:

☐ **Access and turning space**

7. door 865 mm wide, opening to the outside or not encroaching on turning space
8. bevelled threshold 13 mm maximum
9. turning space 1500 mm diameter in front of appliances and counter
10. clearance 300 mm between an appliance and adjacent wall
11. knee-clearance 680 mm high and 760 mm wide under the sink

☐ **Functional safety**

12. slip-resistant floor
13. general lighting 200 lux
14. directed lighting of 250 lux on appliances and on ironing facilities

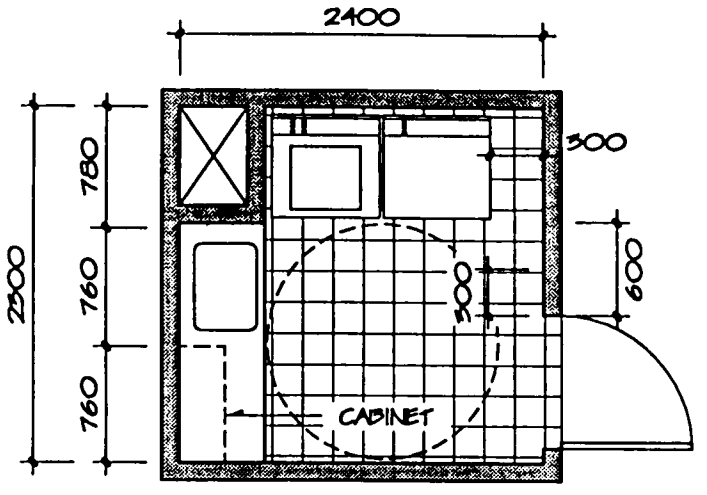

LAUNDRY ROOM: MINIMAL DIMENSIONS

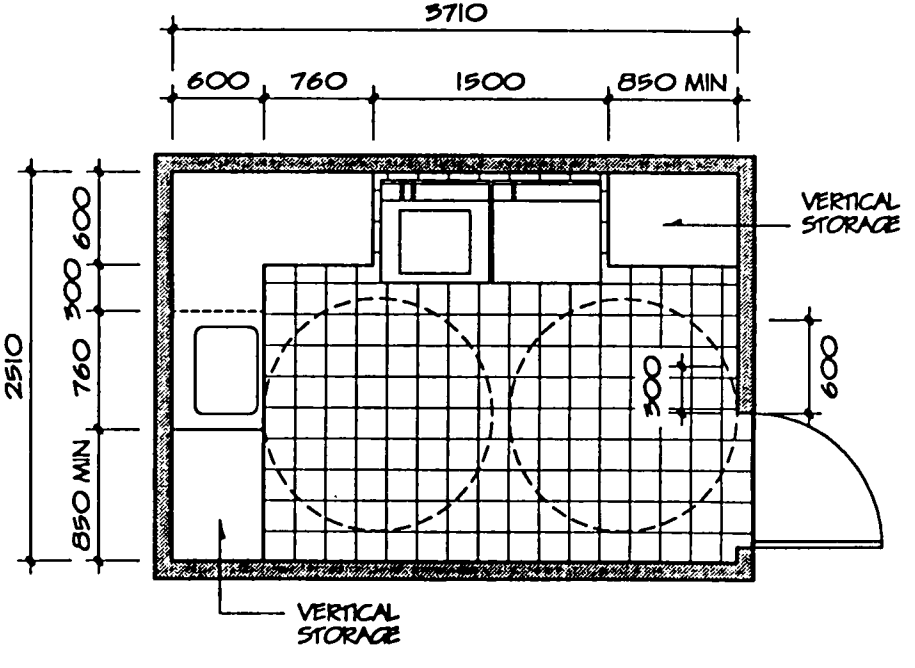

LAUNDRY AND STORAGE ROOM

☐ Ease of use

15. lever door handle
16. counter at 880 mm from floor level
17. upper cabinet at 360 mm from counter
18. light switch at 1050 mm from floor level
19. wall thermostat at 1200 mm from floor level
20. electric outlet with breaker on edge of counter
21. electric outlet at 450 mm from floor level
22. lever faucet at sink
23. where provided, vertical cabinet with shelves between 400 mm and 1200 mm from floor level and toe recess 180 mm high and 150 mm deep

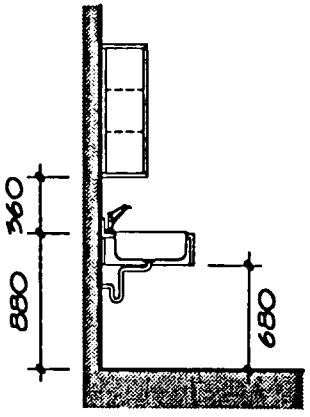

25. DOORS AND THRESHOLDS

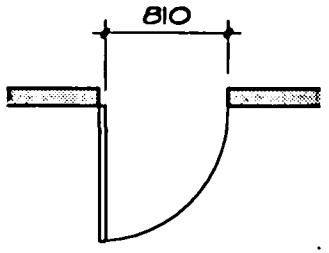

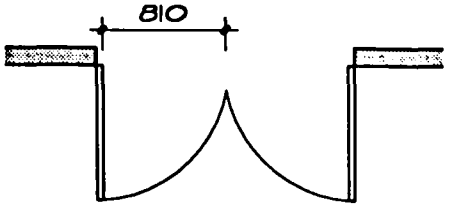

- ☐ Doors must allow for a minimum clear opening of 810 mm. Swinging doors 865 mm wide usually provide this clear opening. However, where the door hardware encroaches on this clearance (for example, a panic bar on fire exit doors) a wider door is required.

  For double swinging doors, the clear opening of one door must be 810 mm minimum.

  Patio doors must also meet the 810 mm clear opening criteria. Patio sliding doors 1500 mm wide do not meet these requirements. They must be 1800 mm wide or more, depending on the type of hardware chosen.

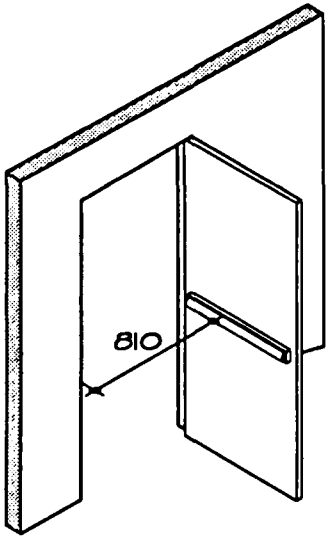

- ☐ Use of a storm door is not recommended since it adds to the number of opening and locking operations. It also requires large manouvering areas on both sides of the door. It is preferable to choose an insulated door for balconies, terrasses and entries of small buildings.

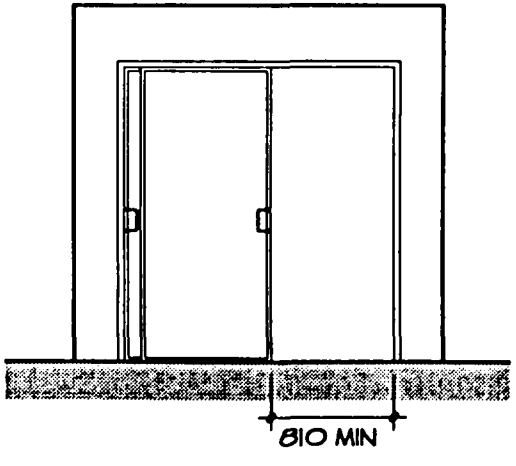

- It is preferable for doors to have no thresholds. Other products, such as automatic door bottoms, can effectively replace thresholds in certain circumstances.

  Where a transition occurs between two types of flooring (bathroom and corridor, for example) or where regulations make thresholds mandatory, the threshold shall be bevelled and have a maximum height of 13 mm.

  Exterior entrance doors and doors to balconies and patios should have bevelled thresholds with a maximum height of 13 mm. To meet this requirement, the tracks of any sliding door must be inset. Electric baseboard heating should not be installed in front of doors leading to balcony, patio or terrasse.

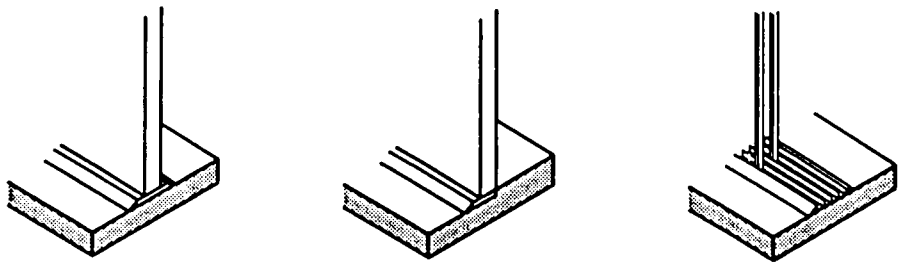

- The lower edge of glazed sections in doors must be between 300 mm and 1050 mm from floor level.

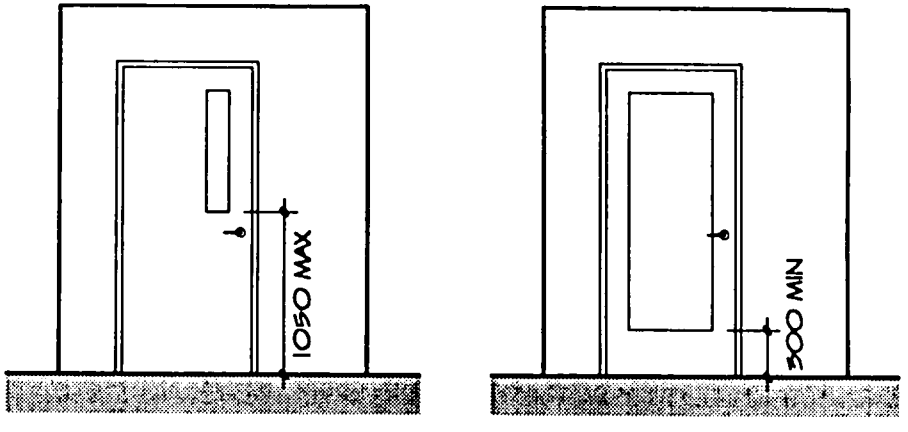

- To allow all residents to open and close swinging doors easily, a lateral wall clearance on both sides of the door must be provided. This clearance must be located at the handle edge of the door and be at least 300 mm on the push side of the door, and at least 600 mm on the pull side of the door.

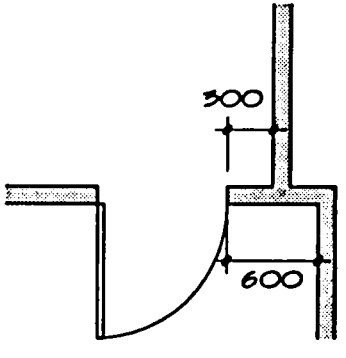

26. HARDWARE

- ☐ Door handles with a latch should be lever-type. The lever should be at least 75 mm long and preferably curve toward the door.

  Fixed door handles should be D-shaped, a minimum 100 mm long. A 40 mm clearance is required between the door and the handle grip.

  Door handles should be mounted 950 mm from floor level.

- ☐ Locks should be operable with only one hand, and be mounted at 1050 mm maximum from floor level. Washroom or bathroom door locks must be openable from the outside.

- ☐ Where door-closers are required, they should be adjustable in order to be able to reduce the force required to open the door.

  The closing delay for a door with a door-closer must be at least 3 seconds, measured from its 70° open position to within 75 mm of its closed position[1]. Preferably the door-closer will be a delayed action model.

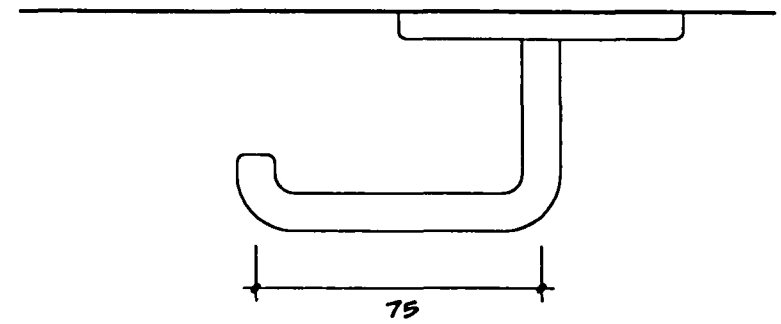

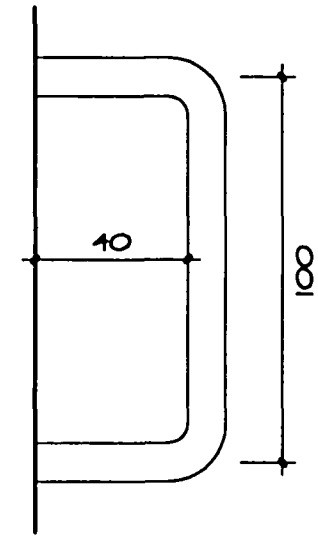

(1) NBC 1990

- ☐ Automatic door-openers should be installed on the vestibule and entry hall doors in multi-occupancy residential buildings. They may also be installed on doors used in the circulation route, at exits, common spaces, etc.

  Automatic door-openers must be equipped with an emergency battery in case of power failure. Doors with automatic door-openers must be manually operable at all times. Door-openers must be activated by push-plate controls located on the wall, beyond the door swing, at 950 mm from floor level and no closer than 300 mm from an interior wall corner.

  A door-opener on a non-locking door should be openable by a movement detector, by a push-plate device or by a sensor that can be activated by a remote control.

  A locking door with an automatic door-opener should be activated by a key-control or a card-reader located beyond the door swing, at 950 mm from floor level and not less than 300 mm from an interior wall corner. It should also include a sensor so that it can be activated by remote control.

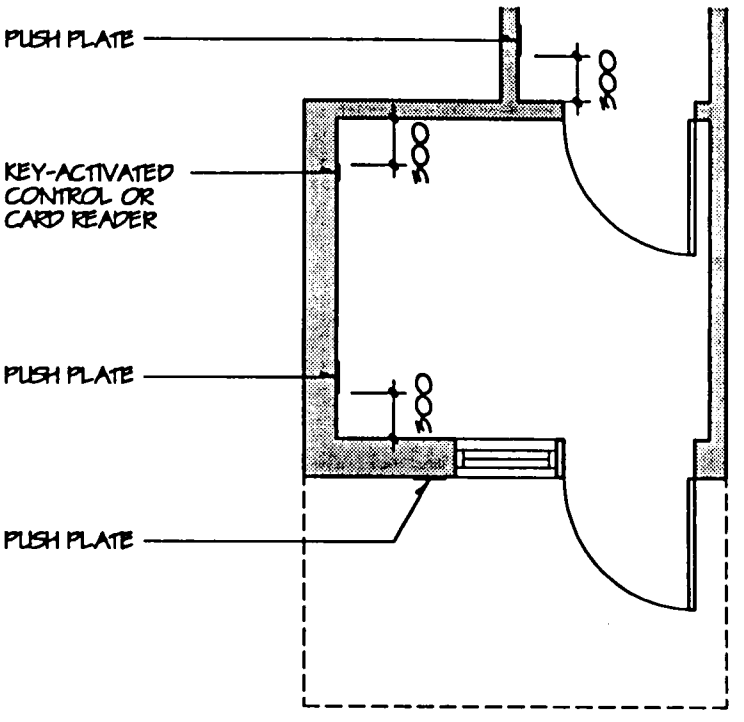

27. CONTROLS AND ELECTRIC OUTLETS

Controls should be located at least 300 mm from an interior wall corner:

- at 1050 mm maximum from floor level for switches, manual fire alarm and wall outlets placed above a counter;

- at 1200 mm maximum from floor level for thermostats, intercoms, active breakers, main electric panel and burglar alarm system;

- at 450 mm minimum from floor level for electric wall outlets, telephone jacks and cable outlets.

The controls are easy to manipulate using one hand; the information is in large letters and easy to read.

Illuminated rocker switches are recommended.

An electric outlet is required beside each telephone jack.

Three-way switches are required at the top and bottom of stairways.

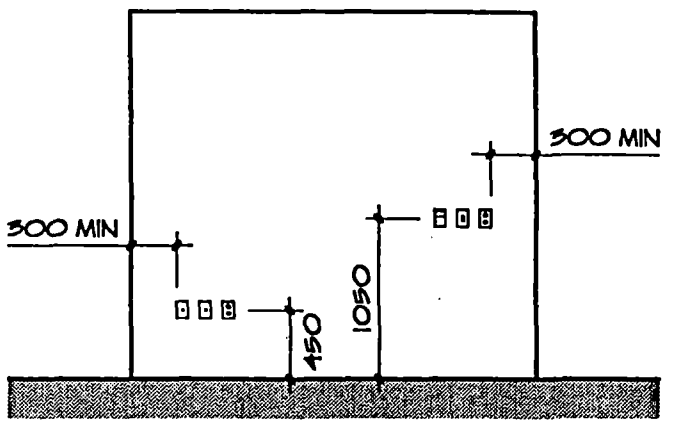

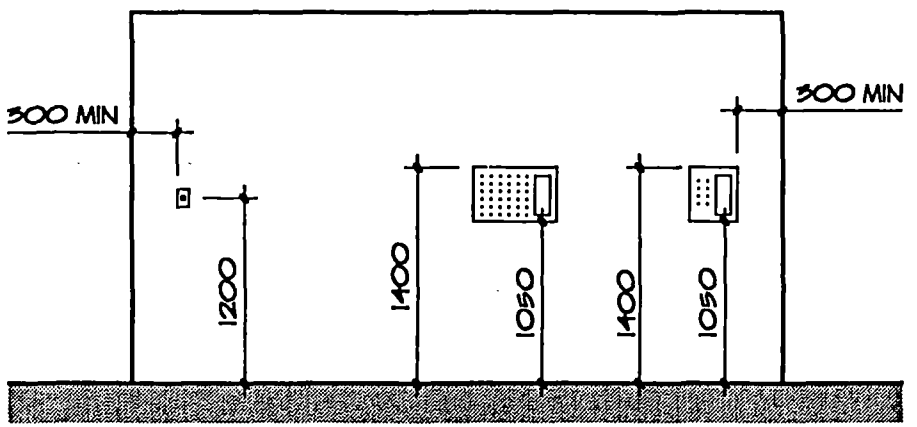

28. LIGHTING

The performance required for lighting the different spaces in residential buildings and in the housing units is indicated in lux.

Several factors influence the performance obtained by a light fixture:

- type of bulb used: incandescent, fluorescent, halogen, etc.
- type of fixture: diffuser, directed, etc.
- wattage
- environment: room dimensions, colour and texture of wall and ceiling, etc.
- maintenance: accumulation of dust, etc.
- manufacturer.

Choosing the light fixtures in order to meet the required performance is the responsibility of the developer or designer.

Information should be obtained from manufacturers on the performance data of their products considering the context of a specific installation. The manufacturers are usually in a position to provide this information concerning their products.

The following rule does not replace the information provided by the manufacturer, but it offers a general idea of the impact of the performance required in terms of lighting.

In an office or a residential space, a diffuser light fixture at 2400 mm from floor level (8 foot ceiling) has the following performance:

- 1 watt/square foot of floor in fluorescent = 300 lux
- 1 watt/square foot of floor in incandescent = 100 lux

For example, an incandescent 100 watt bulb in a room 10 feet x 10 feet (100 square feet) will produce 100 lux.

29. WINDOWS AND GLAZED PANELS

WINDOWS

Casement or awning-type windows are recommended. Large windows should be divided so as to allow residents to open smaller, lighter sections. The window sill should be between 250 mm and 750 mm from floor level.

The handle used to open and close the window shall be between 600 mm and 1050 mm from floor level, and at least 300 mm from a wall corner.

Lever type handles, a minimum 100 mm long, are recommended for easy grasping and manipulation.

The locking system controls should be between 600 mm and 1050 mm from floor level and easy to manipulate. If casement windows are fitted with two vertical locks, these should be activated in tandem.

The choice of a window model which is compatible with an automatic window-opener may eventually prove helpful in meeting the special needs of some individuals. Such a window model is particularly appropriate where it is difficult to reach the window opening mechanism (above a kitchen sink, for example).

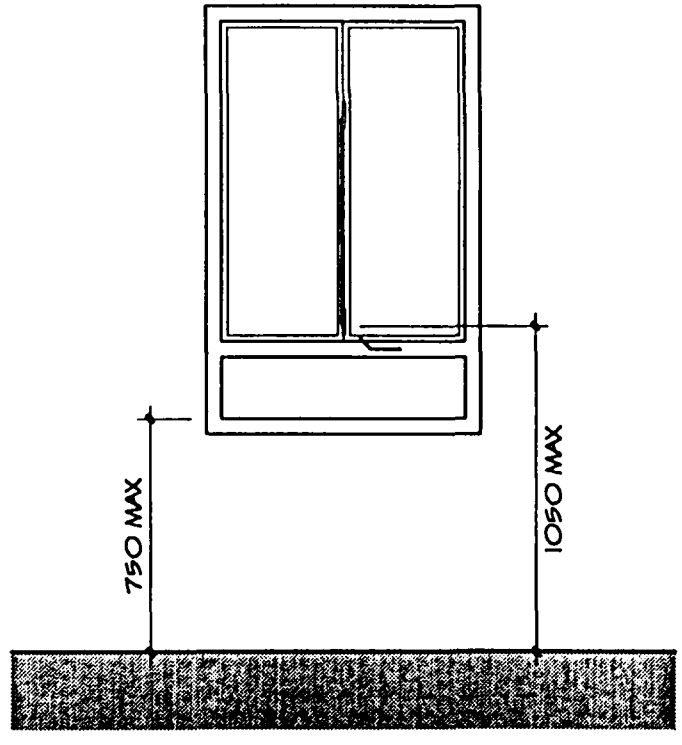

GLAZED PANELS

In public corridors, vestibules and entrance halls in multi-family residential buildings, windows and glazed panels should be placed judiciously so that glaring light will not dazzle residents and visually obstruct signage and equipment (letter boxes, intercom, etc.).

The use of diffusers (filters, blinds or sun screens) facilitates glare reduction.

All full-height glazed panels should have colour-contrasted markings, 130 mm high, at 1350 mm from floor level.

30. HEATING AND AIR CONDITIONING

The modes of home heating offered to developers are varied, and new products appear regularly on the market, particularly in relation to the importance placed on energy conservation and on air quality.

The type of heating chosen for a project is the developer's responsibility and should take into consideration the following characteristics to meet the barrier-free and adaptability requirements:

- allow for control of air quality (temperature, humidity, circulation, freshness);
- allow for control of temperature by zones;
- allow for the addition of filtering devices; and
- have controls which are easy to use and independently controled in the living spaces of the dwelling unit.

31. PAVING AND FLOORING

The slip-resistance capabilities of various types of flooring available on the market are described in Appendix A of the CAN/CSA-B651-M90 "Barrier-Free Design".

For interior areas where slip-resistant flooring is required, it is recommended to use non-varnished ceramic tiles or PVC with a slip-resistant grainy surface.

For interior premises where anti-slip flooring is not required, it is possible to use PVC, clay tiles or hardwood. Rubber and carpets (even if they are low-pile and densely woven) offer a roll resistance (to persons using wheelchairs, for example) and should be avoided in the common spaces of residential buildings (corridors, community room, etc.)

In the common areas of residential buildings it is interesting and useful to vary the colour and texture of the floor covering in order to provide visual and tactile reference points for the users (between the vestibule and the corridor, between the corridor and the area in front of the elevator, etc.)

For the exterior, it is recommended to use poured asphalt, concrete, concrete paving blocks, and crushed granite fair-faced concrete. Stone dust is acceptable provided that it is very well compacted.

Appendix A

Slip-Resistance of Floor Finishes

Note. *This Appendix is not a mandatory part of the standard.*

Table A1
Slip-Resistance of Typical Flooring Surfaces

Source: British Sandard 5395 Part I: 1977, *Code of Practice for the Design of Straight Stairs*

	Slip-Resistance*		
Materials	**Dry and unpolished**	**Wet**	**Remarks**
Clay tiles (carborundum finish)	Very good	Very good	May be suitable for external stairs.
Carpet	Very good	Good	
Clay tiles (textured)	Very good	Good	May be suitable for external stairs.
Cork tiles	Very good		
PVC with nonslip granules	Very good	Good	
PVC	Very good	Poor to fair	Slip-resistance when wet may be improved if PVC is textured. Edges of sheet liable to cause tripping if not fixed firmly to base.
Rubber (sheets or tiles)	Very good	Very poor	Not suitable near entrance doors.
Mastic asphalt	Good	Good	
Vinyl-asbestos tiles	Good	Fair	

Linoleum	Good	Poor to fair	Edges of sheets may cause tripping if not securely fixed to base.
Concrete	Good	Poor to fair	If a textured finish or a nonslip aggregate is used, slip-resistance value when wet may be increased to good.
Granolithic	Good	Poor to fair	Slip-resistance when wet may be improved to good by incorporating carborundum finish.
Cast iron	Good	Poor to fair	Slip-resistance may be acceptable when wet if open treads are used.
Clay tiles	Good	Poor to fair	Slip-resistance when wet and polished very poor.
Terrazzo	Good	Poor to fair	Nonslip nosing necessary on stairs. Slip-resistance when polished or if polish is transferred by shoes from adjacent surfaces very poor.

**"Very good" means surface suitable where special care is required, approximates to c.o.f. >0.75.*
"Good" means a surface satisfactory for normal use, approximates to c.o.f. 0.4 to <0.75.
"Poor to fair" means surface below acceptable safety limits, approximates to c.o.f. 0.2 <0.4.
"Very poor" means surface unsafe, approximates to c.o.f. <0.2.

32. MEETING SPECIAL NEEDS

The designs proposed in the preceeding sections meet the needs of the great majority of Canadians with regard to barrier-free access in their homes. They also make provisions for future improvements (adaptability) if and when they are required.

Nevertheless, for some individuals (who represent a very small percentage of the population) the proposed characteristics and performance criteria will not prove sufficient.

This is where the idea of meeting special needs comes into play.

Such situations require a case by case analysis and the chosen solution will basically depend on the capacity and needs of each individual concerned.

Developers or builders wishing to construct special projects for people with identified disabilities are advised to determine, in collaboration with the potential residents and their occupational therapists, the items to be added to the barrier-free and adaptable features already proposed.

Some Canadian provinces offer grant programs to help subsidize the acquisition and installation of equipment required to meet some special needs.

Before undertaking such a project, developers and landlords are advised to enquire about these aid programs.

There is a wide range of solutions available to meet special needs. Technological evolution combined with the adoption of the Americans with Disabilities Act in the United States (1990) has given rise to the development of various specialized equipment.

To provide the reader with an overview of the diversity of solutions and equipment available, this section presents a list of some of the interventions that meet special needs.

These interventions focus on the following client groups:

- people with visual limitations (storage, colour contrast, audible and tactile clues, etc.);
- people with auditive limitations (adaptations of communication means, signage, etc.);
- people in wheelchairs (additional space, technical aids, home automation, heights, clearances etc.);
- people with reduced mobility (security, emergency call systems, etc.).

☐ MEETING SPECIAL NEEDS
...in the bathroom

- Clearance of 760 mm at one side of the toilet, thus facilitating lateral transfers
- Direct relation with the bedroom to facilitate the installation of a transfer lift between the bed and the bathroom
- Installation of a barrier-free shower stall with no change in level
- Sliding door or door with reduced swing range to reduce encroachment on the turning space
- Thermostatic control for bathtub, shower and washbasin
- Emergency alarm connected to a monitoring system
- Installation of contrasting colour band at the counter edge
- Wall painted in a colour which contrasts with the sanitary facilities
- Task lighting at the vanity counter
- Magnifying mirror

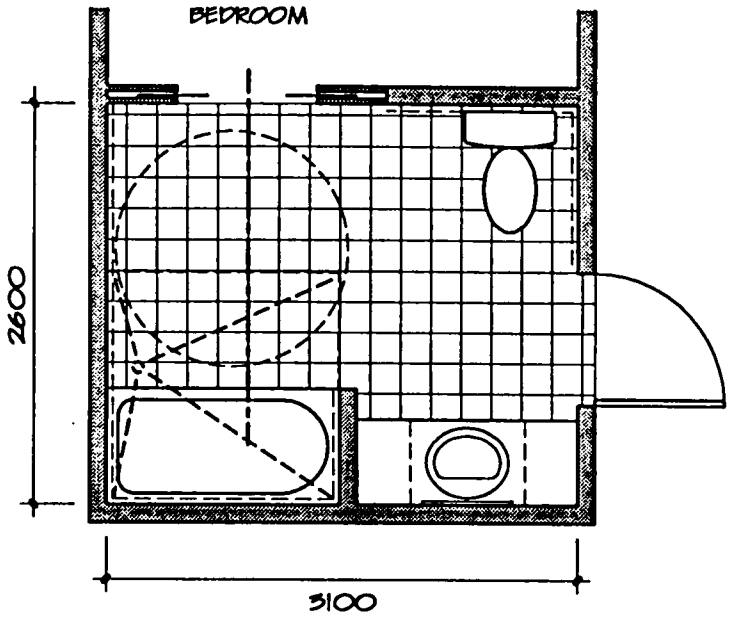

BEDROOM-BATHTUB RELATION

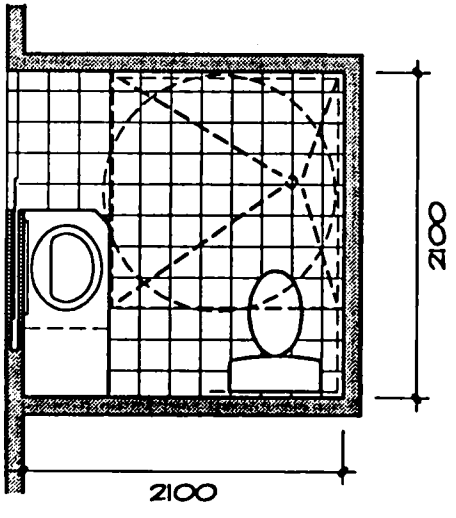

SHOWER STALL WITH NO CHANGE IN LEVEL

☐ MEETING SPECIAL NEEDS
... in the kitchen

- Folding or sliding doors for cabinets
- Automatically closing hinges for cabinet doors and drawers
- Contrasting colour for cabinet handles and for strip along cabinet edge
- Counter with rounded corners
- Portion of counter lowered and clearance underneath provided (permanently or by means of a removeable unit)
- Installation of adjustable brackets to reposition the height of counters or upper cabinets, as desired (occasional adjustment)
- Motorized counters and cabinets allowing for height adjustment (frequent adjustment)
- Storage space with sliding shelves, baskets or drawers
- Thermostatic control to limit maximum water temperature
- Shallow sink (125 mm deep)
- Wide space for side-by-side refrigerator
- Retractable work surface 750 mm from floor level with a 200 mm diameter hole to hold mixing bowl
- Drawer with retractable ironing board (can be integrated into laundry area)
- Mechanically-opening window with remote control

☐ MEETING SPECIAL NEEDS
... in the bedroom

- Electric lock for dwelling entrance door which can be activated from the bedroom (remote control or other means)
- Emergency call alarm located near the bed and connected to a monitoring system
- Located next to a bathroom to facilitate the installation of a ceiling rail for a transfer lift between the bed and the bathroom facilities
- Wall grab-bar near the bed
- Installation of a trapeze on the ceiling
- Sliding or folding doors which do not encroach on the turning space

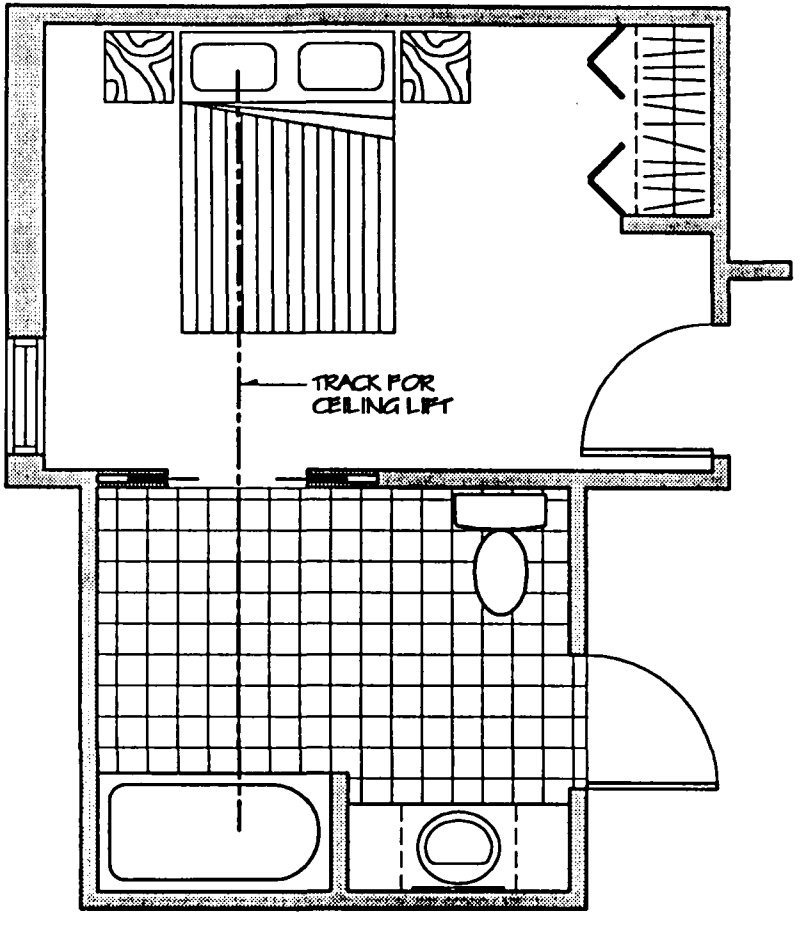

☐ MEETING SPECIAL NEEDS
... in the laundry

The following solutions can be used in the laundry space of a dwelling unit or in a laundry room of a residential building.

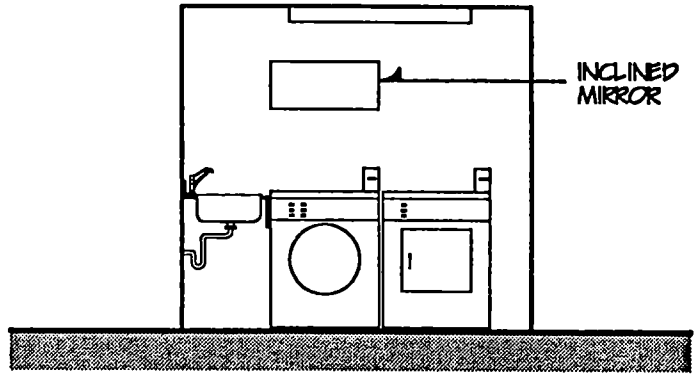

- Controls on the front of the laundry appliances
- Controls with tactile markings and large visible markings
- Front-loading washer or inclined overhead mirror
- Cabinet with retractable ironing board which can be installed at various heights
- Sliding shelves in the cabinets

☐ MEETING SPECIAL NEEDS
... in the parking area

The following solutions can be used for parking areas of small residential buildings or for interior and exterior parking for large buildings.

Some persons use mechanical lifts to enter and leave their vehicles. Parking spaces for them must be wider than shown in the basic model to allow for lifts to operate outside the vehicle. A manouvring space is also necessary beyond the lift.

Such parking spaces must:

- measure at least 2400 mm in width (space for the vehicle)
- allow for lateral access space of 1370 mm (space for the lift)
- allow for a manouvering area of 900 mm (circulation space)

for a total width of 4670 mm.

To accommodate such residents, it is possible, in small buildings, to widen the outdoor parking space by reducing the area reserved for lawn, flower beds, etc. On the other hand, it will be difficult to accommodate this type of vehicle in a carport or garage unless adequate width has been provided.

To meet these special needs in multi-family residential buildings, it is possible to reserve two regular spaces (2 x 2400 mm = 4800 mm) and to clearly identify one of them as the required access space, with diagonal lines painted in a contrasting colour.

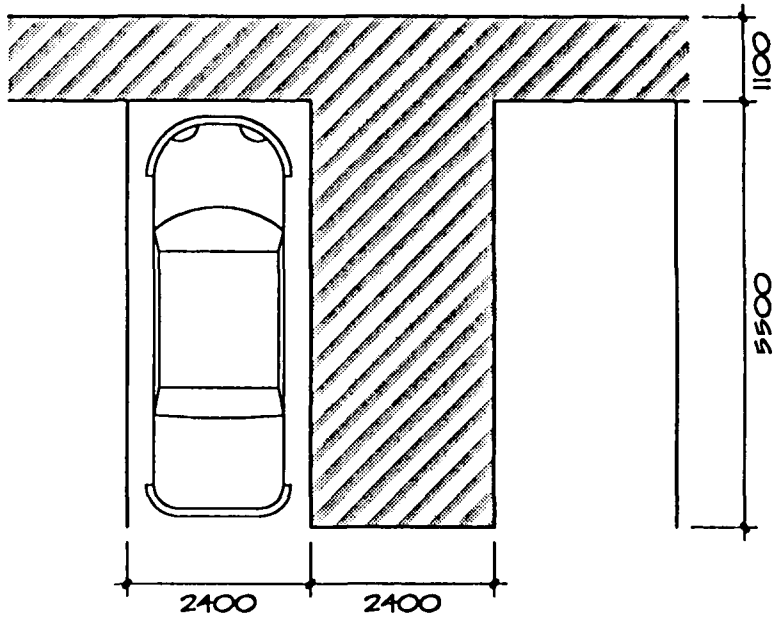

33. HOME AUTOMATION

Over the past few years, we have witnessed many developments in terms of communication and computerization.

New technological applications in the home make it possible for residents to control their environment both in terms of distance (telephone, remote control) and of time (programming an action to occur later).

Home automation is still relatively new. The main functions of the systems currently available on the market focus on anti-burglary security, security in case of emergency and on energy management. However, many other functions are being introduced.

Such technologies can improve access for people with visual or auditory limitations, functional security during the execution of daily activities for people with special needs, and security in case of emergency.

Although the cost of systems currently available on the market may not justify including them among the minimal barrier-free and adaptability characteristics presented in this guide, it could be advisable for developers and designers to make provision for such systems by prewiring when projects are being built.

As this is a relatively new industry, a variety of standards and protocols are currently being used and developed, and to date none has clearly emerged as the dominant standard. Developers interested in this subject are advised to research the field and ensure that the prewiring or system chosen will be compatible with the products that will be offered by the industry.

BIBLIOGRAPHY

Two documents in particular were used to prepare this guide.

The first, "Focus Group Sessions to Examine Barrier-Free and Adaptable Housing Designs", was commissioned in 1993 by Canada Mortgage and Housing Corporation and prepared by Hickling Corporation. This document summarizes the information gathered during more than 15 focus group sessions held with consumers in the major Canadian cities. During these sessions consumers of all ages and living in all types of housing identified the elements which they deemed to be important in barrier-free and adaptable housing. These elements were integrated into the various themes in the technical section of this guide.

A second important document, "Performance and Universal Accessibility Criteria" was prepared in 1993-1994 by Société Logique Inc. under a grant from Canada Mortgage and Housing Corporation's External Research Program. It is a survey of residents living in barrier-free dwelling units that verifies whether the particular characteristics of their barrier-free and adaptable units adequately meet their needs.

The results of this survey enabled Société Logique Inc. to improve the architectural accessibility concept which had been developed, and most of the subsequent design modifications are included in this guide.

Other documents were also consulted in the production of this guide.

1. Housing Choices for Canadians, Ottawa, Ontario: Canada Mortgage and Housing Corporation, 1992

2. Martel, Sylvie et Marthe De Sart. Accès Cible, Montreal, Québec; Institut de réadaptation de Montréal, 1988

3. Maintaining Seniors' Independence: A Guide to Home Adaptations. Ottawa, Ontario: Canada Mortgage and Housing Corporation, 1992

4. Prescriptions fonctionnelles, Québec, Québec: Société d'habitation du Québec, 1992

5. Keys to Freedom Manuel: Housing alternatives for quadriplegics, Vancouver, B.C.: British Columbia Rehabililation Society, 1990

6. Fair Housing Amendments Act: Adapt to a Better Design. Jackson Heights, N.Y.: Eastern Paralyzed Veterans Association

7. A Modification Checklist: Accessibility using RRAP for Disabled Persons (NHA 5895). Ottawa, Ontario: Canada Mortgage and Housing Corporation, 1986, revised 1991

8. Simon, Joan, Andrew Aitkens et al., Housing an Aging Population: Guidelines for Development and Design, Ottawa: National Advisory Council on Aging; 1988

9. Accessible Housing: A Manual on North Carolina Building Code Requirements for Accessible Housing, Barrier-Free Environments Inc., Raleigh, N.C.: Insurance Comissionner's Office, North Carolina Department of Insurance, 1980

10. Mace, Ronald L. The Accessible Housing Design File. Raleigh, N.C.: Barrier-Free Environments Inc., 1991

11. Eligible Modifications for Residential Rehabilitation Assistance Program for Disabled Persons: A Guide for RRAP Delivery Agents (NHA 6342). Ottawa, Ontario: Canada Mortgage and Housing Corporation, 1990, 1991

12. Falta, Patricia. Vers l'accessibilité universelle, Office des personnes handicapées du Québec, Drummondville, Québec : Actes du Colloque scientifique international, 1992

13. Lanctôt, Sophie. Accessibilité universelle en habitation, Office des personnes handicapées du Québec, Drummondville, Québec: Actes du Colloque scientifique international, 1992

14. Falta, Patricia. Accessibility Costs for Housing, Ottawa, Ontario: Canada Mortgage and Housing Corporation, 1983

15. Falta, Patricia. Étude comparative des coûts de construction des logements adaptés et des logements universellement accessibles, Montréal, Québec: Société Logique Inc., 1990

16. Habitations Perras : 44 unités de logement universellement accessible, Montréal, Québec: Société Logique Inc., 1992

17. Évaluation des adaptations dans quatre logements situés à Ville St-Laurent (Domotique), Montréal, Québec: Société Logique, 1994

18. Richard, Pierre. Sécurité et évacuation des personnes handicapées en milieu résidentiel, Office des personnes handicapées du Québec, Drummondville, Québec, 1987

19. Richard, Pierre. L'accessibilité à domicile, Office des personnes handicapées du Québec, Drummondville, Québec, 1982

20. Grosbois, Louis. Handicap physique et construction, Publications Le Moniteur, 3e Édition, Paris, 1993

21. Access, a Guide for Architects and Designers, The Canadian Paraplegic Association, Manitoba Division, Second Édition, 1989

22. The Source Book: Architectural Guidelines for Barrier-Free Design, Barrier-Free Design Centre, Toronto, Ontario, 1989

23. Adaptation des installations terminales, INCA and Transportation Development Center, Montreal, Québec

24. Accessibility Evaluation Guide (AR711), Ottawa, Ontario: Public Works Canada, 1992

25. Goldsmith, Selwyn. The Ideology of Designing for the Disabled, University of Nebraska, Lincoln, NB: Proceedings of the Fourteenth International Conference of the Environmental Design Association, 1983, pp. 198-214

26. Falta, Patricia L. Barrier-Free Design for Disabled Persons: Evaluation Framework for Assessing the Quality of Accessibility in Public Buildings, University of Nebraska, Lincoln, NB: Proceedings of the Fourteenth International Conference of the Environmental Design Association, 1983, pp. 215-222

27. Building Design and Hospitality: To better serve your clients, Montréal, Québec: Kéroul, Association de développement touristique pour les personnes handicapeés du Québec, 1986

28. Richard, Pierre. Guide normatif d'accessibilité universelle, Ville de Laval, Québec, 1992

29. Barrier-Free Design: CSA\CAN-B651-M90. Toronto, Ontario: Canadian Standards Association, 1990

30. Cost of Accessible Housing. Washington, D.C.: U.S. Department of Housing and Urban Development, Office of Policy Development and Research, 1993

31. Barrier Free Environments. Adaptable Housing: Marketable Accessible Housing for Everyone. Washington, D.C.: U.S. Department of Housing and Urban Development, 1987

32. Liebrock, C. and S. Behar. Beautiful Barrier-Free: A Visual Guide to Accessibility. Florence, KY.: Van Nostrand Reinhold, 1992

33. Girardin, Pierre. La domotique dans l'habitat québécois, étude prospective. Québec, Québec: Société d'habitation du Québec, 1991

34. National Building Code of Canada, 1990 Edition, National Research Council of Canada, Ottawa, Ontario

35. Règlement sur l'application du Code du bâtiment 1990, Gouvernement du Québec, 27 octobre 1993

36. Proposed Modifications to the National Building Code of Canada, 1990 Edition, Société Logique, Montréal, Québec, December 1992

37. Comments and Proposals for National Research Council for Reviewing the National Building Code of Canada, 1990 Edition, Société Logique, Montréal, Québec, December 1993

38. Lighting Handbook: Reference and Application. (Mark S. Rea, Rensselear Polytechnique Institute) New York, N.Y.: Illuminating Engineering Society of North America

39. A Socio-demographic Profile of Canadians Experiencing Health or Activity Limitations. TEEGA Research Consultants Inc. for Canada Mortage and Housing Corporation, 1991