ᐃᓚᓗ ᐊᒪᓗ ᐅᑯᖅᐅ

THE STOVE AND HEATER

Education Division
Northern Administration Branch
Department of
Indian Affairs and Northern Development
Ottawa, Canada
1967

E100.E36
N332
c.1

ᑭᐊᓴᐅᑎᑲ ᐊᒪᓗ ᐅᑯᓴᐅᑎᑲ

THE STOVE AND HEATER

ᑲᓄᐃᓕᒫᒃᐊᑲᓂᕐᑲᑲ ᑲᒪᒋᐊᓗᒃ

Prepared by:

G.H. Needham

ᐃᓄᑐᒪᓕᒫᑎᑕᐅᔪᑦ ᑲᐳᐊᒍᓗ ᔪᐊᓇᓕᒍᓗ

Translated by:

Harriet Ruston and Joanasie Salomonie

ᐃᓄᐃᑦ ᐃᓕᓴᕐᓂᖅ ᐱᓇᓕᐊᑎᑦ
ᐃᓄᐃᑦ ᐊᑐᒪᑎᑦ ᐃᓅᓂᑦ

Adult Education Program
Eskimo Rental Housing

ᐱᒋᐊᑕᒋᑦ

ᐅᑯᐊ ᐊᓕᓪᓕᐊᑎᐊᓂᒪᕐᓂᖅ ᐅᐃᒍᒋᓪᓕᐅᑎᑐᐃᓐᓇᑐᑦ (ᑯᓂᓚ ᐊᐃ-
ᕿᐱᓂᑦ ᐃᓕᓴᐊᑎᓂᔨᐅᓴᒃ ᐱᕐᓂᑦ ᐊᑐᒪᒋᓂᑦ ᐃᓗᓐᓂ (ᐃᒪ ᖃᐅ-
ᐳᒪᐅᑎᓵᐃᑦ ᖃᓄ ᑭᐊᓵᐅᑎᓴᒃ ᐃᓗᕈᖃᐅᒋᐊᒥᖅ.

Wm Simpson

ᐊᒪᓂᖅᖃᒪ ᐃᓕᓵᐃᐳᑦ

Foreword

This booklet is prepared as part of Phase II, Adult Education Program, of the Eskimo Rental Housing project to give factual information on the cook stoves and space heaters in the new rental houses.

It is experimental and therefore subject to revision.

D H Simpson

Chief, Education Division

ᐅᖃᓕᒍᖏᑐᖅ

1. ᐅᑲᓪᓚᔭᑲ ᐱᒋᓚᒃᓴᓕᐅᑎᓪ

ᐅᑲᓪᓚᔭᓕᒫᓂ ᐸᐊᕆᐅᑎᐅᓪ ᐊᒪᔭ ᐅᑯᕆᐅᑎᐅᓪ.....1

ᐃᒪᐃᔪᑲ ᐅᑲᓪᓚᔭᑲ.....2

ᐅᑲᓪᐊᔭᑦᐅᑎᑲ.....2

ᐅᑲᓪᐊᔭᑕᑎᑲ.....3

ᑦᐅᐳᕆᐅᑎᓂ ᐅᑲᓪᐊᔭᑦᐅᑎᐅᓪ.....3

2. ᐃᓂᔪᑎᑲ ᐸᐊᕆᐅᑎᑲ

ᐸᐊᕆᐅᑎᐅᓪ ᐃᓕᓂ.....4

ᑦᓄ ᐃᐸᒋᐊᓂ ᐸᐊᕆᐅᑎᑲ.....5

ᐊᓯᒋᔭ ᑦᐅᐳᒪᓴᐅᒋᐊᓕᑦ.....7

ᐃᓂᔭᑎᑦ ᐸᐊᕆᐅᑎᐅᓪ ᑦᓂᓂ.....8

ᐊᑐᔭᔪ ᐅᓯᕕᓂ ᓂᐊᑯᓴᓕᐅᑐᕕᑦ.....9

ᑦᓄ ᐅᓇᓯᔭᔪ ᐅᓯᕕᑲ.....10

ᐅᓯᕕᑲ ᐅᑯᕆᐅᑎᒋᔭᔪ.....11

ᐅᔭᑕᒪᑦ ᕿᔭᒪᕿᑎᐊᑲᓂᓂ ᐸᐊᕆᐅᑎᑲ.....12

ᐱᓇᓯᐊᑐᓯᑕᒪᑦ ᕿᔭᒪᒋᐊᑲᓂᓂ ᐸᐊᕆᐅᑎᑲ.....13

ᐸᐅᑲ ᐱᖃᓗᒍ ᑭᒧᖅᑎ.....14

ᓴᓗᒪᓴᓗᒋᓐ ᑐᓂᐊᑦ.....17

ᓴᓗᒪᓴᓗᒍᑕᐅᑲ ᑐᓂᐊᑲ ᓂᓪᑎᑐᑲ.....18

3. ᐅᑯᓴᐅᑎᑲ

ᐅᑯᓴᐅᑎᐅᐸ ᐃᓪᓚ.....19

ᐅᑯᓴᐅᑎᑲ.....20

ᑲᓄ ᐃᑯᒪᓗᒍ ᐅᑯᓴᐅᑎᑲ.....22

ᐅᓗᑕᒪᑦ ᓴᓗᒪᓴᑎᐊᖃᓂᒃ ᐅᑯᓴᐅᑎᑲ.....23

ᐱᓇᓂᐊᑭᓂᑕᒪᑦ ᓴᓗᒪᓴᓗᒍ ᐅᑯᓴᐅᑎᑲ.....24

ᐸᐅᑲ ᐱᖃᓗᒍ ᐅᑯᓴᐅᑎᑎᒥ.....25

4. ᑭᐊᓴᐅᑎᑲ ᐊᒪᓗ ᐅᑯᓴᐅᑎᑲ

ᓂᓚᒥ ᑭᐊᓴᐅᑎᓄ ᐅᑯᓴᐅᑎᓗ ᓴᓗᒪᓂᐊᖃᑐᑦ.....26

ᑲᓄ ᑭᐊᓴᐅᑎᓗ ᐅᑯᓴᐅᑎᓂ ᐱᖏᐊᖃᖅᓂᑦ.....27

5. ᑭᐊᓴᐅᑎᑦ ᐊᒥᐊᒪ ᐊᒪᓗ ᐅᑯᓴᐅᑎᐅᐸ ᐊᒥᐊᒪᓐ.....30

ᓂᓇᒪ.....31

6. ᐊᓂᐸᓇᐃᓂᑕᐃᓇᓂᖅ

ᐃᑯᐊᓇᑎᓂᒍᔭᓐᑐᖅ.....32

ᐊᓂᐸᓇᐃᓂᑕᐃᓇᓂᖅ ᑭᐊᓴᐅᑎᒥᖅ ᐊᒪᓗ ᐅᑯᓴᐅᑎᒥᖅ ᐊᑐᓗᓂ.34

ᐃᑯᐊᓇᒥᖅ ᖃᒥᓂᑎᖅ.....39

7. ᑭᐊᓴᐅᑎᐅᐸ ᐃᑯᒪᒪ.....40

Contents

1. Fuel page

Fuel for the Stove and Heater 1
Type of Fuel Oil 2
Fuel Oil Tank 2
Delivery of Fuel Oil 3
Reading the Gauge on the Oil Tank 3

2. The Cook Stove

Parts of the Cook Stove 4
How to Light the Stove 5
Other Things to Know 7
Cooking on Top of the Stove 8
The Oven of the Stove
Using the Oven for Baking 9
How to Heat the Oven 10
Using the Oven for Heating 11
Daily Cleaning of the Stove 12
Weekly Cleaning of the Stove 13
Removing Soot from the Cook Stove 14
Cleaning the Stove Pipes 17
Cleaning the Chimney 18

3. The Heater

Parts of the Heater 19
The Heater 20
How to Light the Heater 22
Daily Cleaning of the Heater 23
Weekly Cleaning of the Heater 24
Removing Soot from the Heater 25

Contents (continued)

4. The Stove and Heater
Why the Stove and Heater May Need Cleaning 26
How the Stove and Heater Should Work 27

5. Finishes on the Stove and Heater
Porcelain Enamel 30
Chrome 31

6. Safety
Fire Hazard 32
Safety In Using the Stove and Heater 34
The Fire Extinguisher 39

7. The Life of the Stove 40

ᑭᐊᖅᑕᑎᒃ

THE STOVE

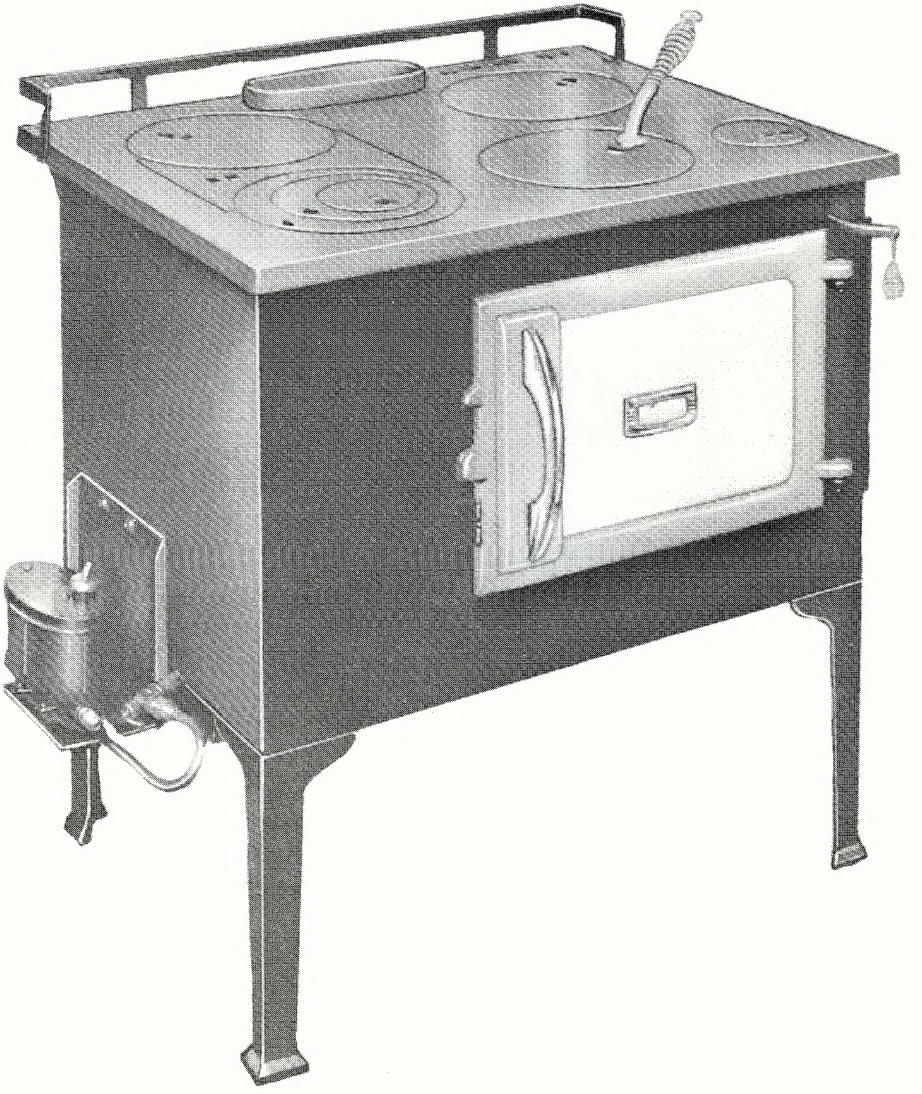

ᐅᒃᓭᔨᓕᒐᓕ ᑭᔪᕆᐅᑎᐅᓪᓗᒍ ᐅᑯᕆᐅᑎᐅᓄᑦ

Fuel for the Stove and Heater

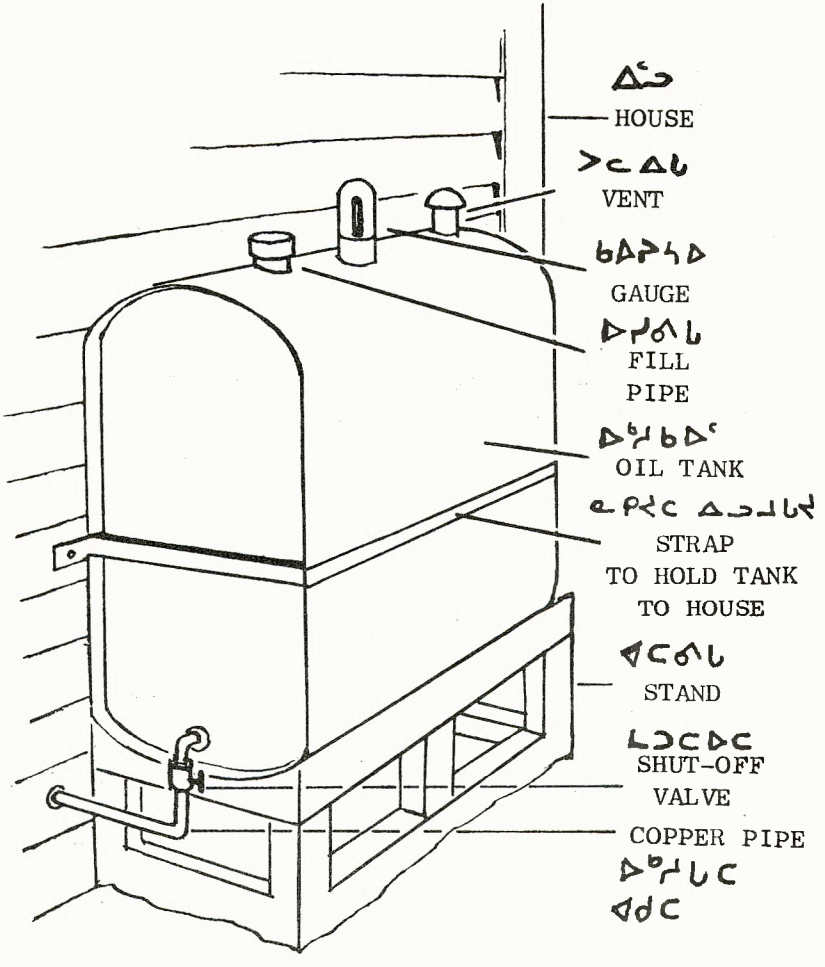

ᐅᒃᓭᐊᓗᒃᐅᑎᒃ ᑭᓪᓭᒪᔪᒃ ᐃᓗᓪ ᐊᑭᓚᓂ ᓭᓪᒥ

The oil tank strapped to the outside wall of the house

ᐃᒪᐃᐧᐣᑲ ᐅᑲᓯᐊᓗᑲ

Type of Fuel

ᐃᒪ ᔪᑎᑲ ᑭᐊᖏᐅᑎᑲ ᐅᑯᖏᐅᑎᐅᓗ ᐅᑲᓯᐊᓗᐧᐣᐃᓇᐅᒋᐧᐣᒥᑲ ᐃᓕᓯ-
ᒪᓴᒥᑲ ᑯᐊᑎᑯᑎᒥᑲ ᐊᐧᐣᓕᒪᓴᑦ.

The cook stove and heater burn a special type of Arctic fuel oil with anti-freeze added.

ᐅᑲᓯᐊᓗᑲᐅᑎᑲ

Fuel Oil Tank

ᐃᓗᓇᑎᑲ ᐃᓗᑕᑲᐅᑦ 250-ᓂ ᑲᓗᑎᓂᑲ ᐅᑲᓯᐊᓗᑲᑕᒪᓴᑦ ᐅᑲ-
ᓯᑎᒪᓂ ᓇᑭᓯᒪᓕᒪᓴ ᐃᓗᑦ ᐊᑭᓇᒪᓂ ᓯᕈᒥ. ᑕᑯᓗᔪ ᒪᐱᓗᔪ 1-
ᒧᑦ ᑲᐅᐳᖏᐅᑎᒪ ᐅᑲᓯᒪᓂᑲ ᑕᑯᔾᐅᒋᐊᑲᐳᑲ ᑲᓯᓂᑲ ᐅᑲᓯᐊᓗᑲ-
ᒪᒪᑦ ᓄᑎᕋᑕᓗᑎᑦ ᐃᓗᑕᑲᐅᒧᑦ.

All new houses will have a 250 gallon outdoor fuel tank strapped to the side of the house. See page 1.
The gauge on the oil tank should show that there is a good supply of oil when the tenant moves into the house.

ᐅᑲᓕᑐ ᐃᓗᓪᓕ

Delivery of Fuel Oil

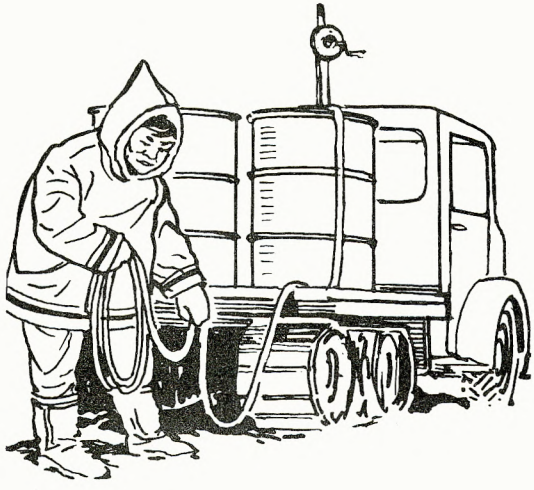

ᐅᑲᓕᐊᓂᑲ ᑲᐃᑕᐅᑲᑕᒪᓱᑲ

45-ᑲᓂᑎᑲ ᑲᑕᐅᓴᓂᓂᐊᑲ

ᑲᕐᒪᑯᑦ ᑲᐃᓕᑲᑕᓂᐊᑐᑦ

ᐃᓄᓕᑎᐅᑦ ᓇᒥᓂᓕᖅᓭᓂᒥᓂ.

Fuel oil will be delivered in 45 gallon drums. The Government will deliver it until the Housing Authority can take over.

ᑕᑯᓂᔪ ᐅᑲᓕᑲᐅᑎᐅᐸᑦ ᑲᐅᐳᖏᐅᑎᒪ.

Reading the Gauge on the Oil Tank

ᐃᓂᒥᑲ ᐊᑐᑐᓂ ᑲᒪᐳᓂ ᑕᒪᒥᑲ ᐅᑲᓕᐊᓂᑲᐅᑎᒥᑲ ᑕᕈᑕᒪᑦ ᐊ-

ᓚᕼᓂᔪ. ᐊᓚᔪᔪᑎᑲ ᑕᐃᒪᑲ ᑲᐅᐳᒪᓂᐊᖏᒥᑲ ᑲᓕᓂᑲ ᐅᑲᓕᐊᓂᓂᑲ

ᐊᑐᕼᒪᒪᒥᑲ ᑕᕈᐅᑦ ᓕᖓᓚᒪᓂ ᑲᐅᐳᒪᓕᐊᓂᔪ ᑲᓕᓂᑲ ᐊᑐᓚᐅᒪᒪᓕ

ᐊᕈᓚᑎᐊᑲᓂᐊᖏᓕᐅᑲ ᐅᑲᓕᐊᓂᓂᑲ.

The tenant and a member of the Housing Authority will read the oil gauge together on the last day of each month and write down the reading in a book. The reading will show how much fuel oil has been used since the last time. The amount of oil used is important because the tenant has to pay for any extra oil over the quota for his size of house.

ᐃᓚᒍᑎᒃ ᑭᐊᓴᐅᑎᒃ

The Cook Stove

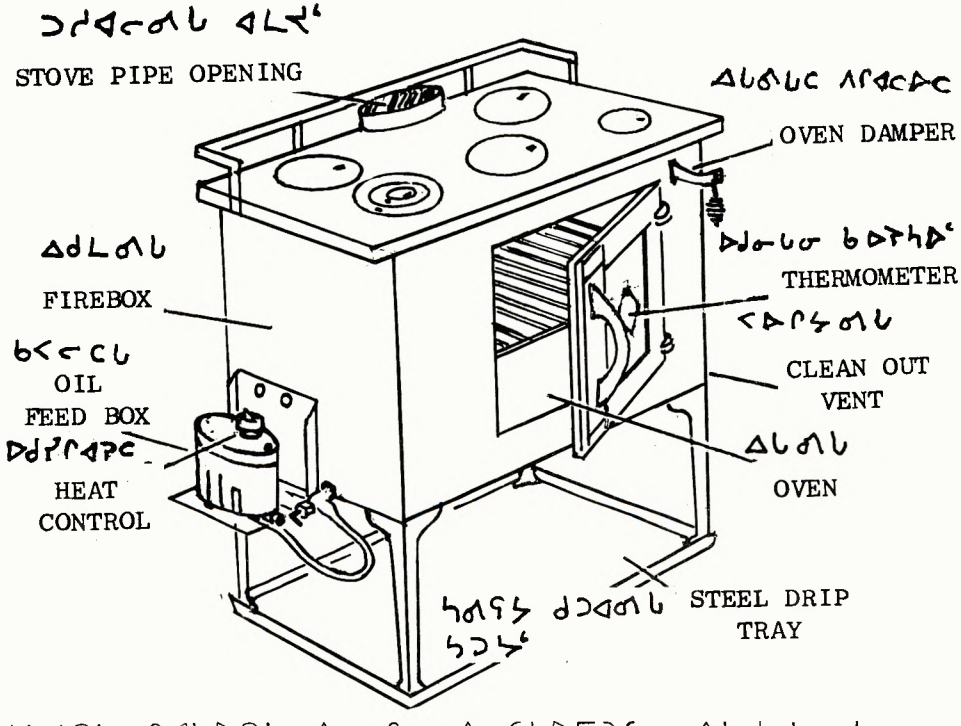

ᐃᓚᒍᑎᒃ ᑭᐊᓴᐅᑎᒃ ᐃᓗᓕᓂ ᐃᓗᑕᒃᐅᒥᑐᑦ. ᐱᓚᓂᒃ ᓂᓂᒥ ᑭᐊᓴᐅᑎᒃ ᐃᓚᒍᑎᐅᓗᓂ ᑭᑐᑕᐅᓚᐅᒃ. ᐃᓗᒥ ᐊᑕᐅᓂᒃ ᓂᓂᐱᒥ ᐃᓚᒍᑎᐅᓗᓂᓗ ᑕᐃᒪᒃ ᐊᑐᑕᐅᓚᐅᒃ ᒃᐅᐳᓚᕆᐊᑦ ᐃᓗᓐᑎᒃ ᓗᓂ ᑭᐊᓴᐅᑎᒃ ᐱᐅᓚᒪᓕᑦ ᐊᒪᓗ ᓗᓂ ᓴᓗᒪᓕᑎᓂᒃ

Cook stoves are in every house. In the 3-bedroom houses they are used only for cooking. In the 1-bedroom house they are used for heating as well as for cooking. You should know how your stove works and how to keep it clean.

ᑲᓂ ᐃᑭᒋᐊᓪᓚ ᑭᐊᓴᐅᑦ

How To Light the Stove

ᐃᓄᒪᑎᓂ ᐃᓕᓴᐃᕕ ᐊᓯᐊᓗᓂᑦ ᐃᒪᓚ ᐃᓕᓂᐊᐸᑎᑦ ᑲᓂ ᐱᓯᔪᓂ-
ᓚᓂ ᓯᕗᓕᐸᒥ.

The Adult Educator or someone else will show you how to do this the first time.

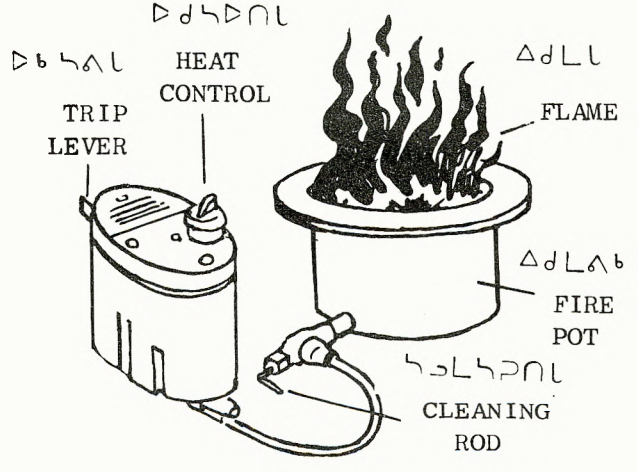

ᒪᑐᐃᓗᔪ ᒪᕗᓂ ᒪᑐᓕᓚᑕ ᑐᓕᐊᔪᑦ. ᐅᑲᓴᑎᑭᓕᓗᔪ ᓇᑭᓗᔪ
ᐅᑲᓴᑕᐅᑎᓚ. ᑲᐅᕆᓴᓯᐊᓗᔪ ᐊᒧᒪᓚᓗᐊᒪᓚ ᑲᐅᕆᓴᐅᑎᓚ ᑕᕐᓚ
ᐃᑯᒪᐃᓚᓂᑲ.

Lift off the 2 left burner lids on the stove.
Start oil flowing by pressing down on the trip lever of the oil feed box on the side of the stove.
Make sure the cleaning rod in the oil line is pulled back out of the burner pot.

ᑲᓄ ᐃᑭᒋᐊᒪ ᑭᐊᖏᐅᑎᑲ

How to Light the Stove (continued)

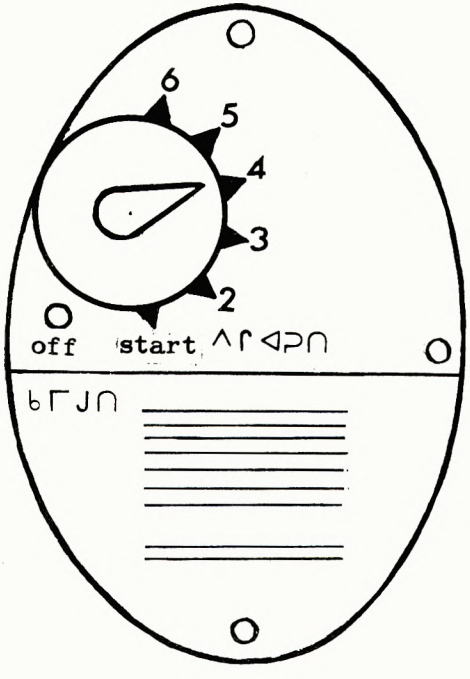

ᐅᑯᓕᑎᐊᕐᑦ 6-ᒍ-

ᓄᒍ ᑕᑯᓇᓄᒍᓄ ᒥᑭ

ᓴᑲ ᐅᑲᓕᐊᓄᑲ ᑕᓕᒪ

ᐃᑯᐊᓇᓂᐅᑦ ᐊᑕᓂ

ᐃᓄᐊᓂᓕᒪᓕᑦ. ᐅᑯ-

ᓕᑎᐊᕐᑦ 1-ᒍᓄᒍ

ᒥᑭᓴᒥᑲ ᓕᑯᖃᖅᒥᑲ

ᐃᑯᒪᓴᒥᑲ ᐃᓄᐊᓂᑦ

ᑲᑕᐃᓄᑎᑦ ᑕᑯᓇᐃᓇᓄᒍ

ᐅᑲᓕᐊᓄᑲ ᐃᑯᐊᓂᓕᒪᓕᑦ.

Turn heat control to 6 and watch for a small amount of oil to appear in the bottom of the fire pot.
Turn heat control to 1 and drop a lighted piece of paper into the oil. Wait to see that the oil is burning.

ᑭᐊᖏᐅᑎᐅᐸ ᒪᑐᒋᑦ ᐃᓂᓄᒋᑦ ᑐᖁᐅᑎᒪ 4-ᒍᓄᒍ ᓇᒪᑐᒥᑲ

ᐅᑯᓂᐊᐳᑲ.

Put the lids back on the stove and turn the heat control up to 4 which is medium heat.

ᐊᓯᒋᓄ ᑲᐅᓗᒪᓵᐅᒋᐊᓕᑦ

Other Things to Know

ᑲᑦᓕᑎᓂᐅᑲ ᑕᓐ ᐅᑲᓴᑎᐊᔨᑎᒪ ᐊᒧᒪᐃᓐᑎᐊᓕᑲ ᐊᐃᓱᓐᓂᐊᒪᑦ

ᑕᑯᒋᑦ ᒪᐱᐅᕿᒥ 5-ᒥ

The trip lever of the heat control valve should be in DOWN position to allow the oil to feed to the burner. See page 5.

ᑲᓂᒋᓄᐊᔪᐃᓄᒍᓄ ᑯᓕᒪᓂᑕᐃᓕᓄᑎᑦ ᑭᐊᖅᐅᑦ ᐃᑭᒪᓕᒍᒍ.

Never stand directly over the burner pot when lighting the stove.

ᑭᐊᖅᐅᑦ ᐃᑯᒪᓕᐊᓂᖅᐅᒪᔭᒥᓱᑲ ᓕᓕᓂ ᐃᓄᒍᑦ ᐃᑎᐸᒥᐸᑦ ᐃ-

ᓕᒪᓂ. ᑕᐃᒪᑕᒪ ᐊᓄᕿᑕᓄᐃᑦ ᒪᑐᐃᓕᒪᐃᓐᒍᖅᐅᑲ ᓇᓕᐊᑐᐃᓐᑲ

ᑕᐃᒪᒪᑦ.

Your stove will work better if there is a steady supply of fresh air coming into the house. For this reason some of the air vents on the outer walls should be open all the time.

ᓕᓚᓇ ᐃᑕᖅᑎᐊᑲᐅᑲ ᑲᓂᒪᓇᑲᑯᓇᑦ ᐊᒥᓕᒍᑎᑲ ᓕᓕᓂᑲᕈᑎ-

ᐊᑲᓄᐊᒥᓱᑦ ᑕᐃᒪᑕᒪ ᐊᓄᕿᑕᓄᐃᑦ ᒪᑐᐃᓪᐃᓐᒍᖅᐅᑦ ᑲᓂᒪᓇ-

ᑲᑯᓇᒍ.

People need fresh air to be healthy. Crowds need more fresh air than just a few people. Keep air vents open for health.

Cooking on Top of the Stove

ᑭᐊᕆᐅᑎᐅᑦ ᐅᓇᑐ-

ᓂᐊᑦ ᐃᑯᒪᐱᐅᑦ ᓇᑕ

The hottest spot for fast cooking is directly over the fire pot.

ᑭᐊᕆᐅᑎᐅᑦ ᑭᒋᓱᓂ

ᓂᑭᓂᒃ ᐅᓇᓱᒍᒪᑐ-

ᐃᓇᐅᐱᑦ.

Use the centre of the stove for foods requiring medium heat.

ᑕᓚᐱᐊᓂᓄ ᑲᓱᓂ ᑭ-

ᐊᕆᐅᑎᐅᑦ ᓂᑭᓂᒃ

ᓱᕆᐃᓕᑎᓱᒍᒪᔪᐱᑦ.

Move toward the right for low heat or for keeping food warm.

ᐃᓕᓄᑦ ᑭᐊᕆᐅᑎᐅᑦ ᑲᓱᓂ ᑕᐃᒪᒃ ᐃᓕᒍᑎᑦ ᕆᓄᒪᐃᓇᓂᐊᒪᑕ

ᒪᑐᒋᑦ ᐱᓯᒪᐸᑕ ᑕᐃᒪᒃ ᐃᓕᒍᐱᑦ ᐃᓕᒍᑎᑦ ᐸᐅᓂᐊᒪᑕ ᕆᓄ-

ᒪᕆᓄᒋᑦ ᐱᕈᑎᐊᑐᐊᓕᕗᑦ.

Cook on top of the stove lids so pots and pans will stay clean.
Removing the stove lids and cooking low into the fire pot blackens the bottoms and sides of pots and makes them difficult to clean.

ᑭᐊᖏᐅᑎᐅᐸ ᐅᓯᕕᒪ

The Oven of the Stove

ᑭᐊᖏᐅᑎᐅᐸ ᐅᓯᕕᒪᓂ ᐅᓯᔪᕕᑦ

Using the Oven for Baking

ᐅᓯᕕᒪ ᑭᐊᖏᐅᑎᐅᐸ ᐃᓂᑕᐅᔾᓯᑦ ᐊᐸᑎᐊᑎᐊᒃᓴᑦ ᓂᐊᑯᔾᓕᐅᑐᓂ ᐊᒪᓗ ᓭᓇᑐᐃᓇᐃᑦ ᓂᑭᑦ ᓴᐦᑐᓇᑐᐸᑦ ᐃᒪᓗᓯᑦ.

The oven has a steel rack that must be removed when baking bread or any food that will rise when cooking.

ᒃᐅᐳᖏᐅᑎᒪ ᐅᓯᕕᒪᑕ ᒪᑐᒪᓂᑦ ᒃᐅᐳᑎᓭᔪᓇᑐᒃ ᒃᓗ ᐅᓇᓂᒪᓂᒃ ᐃᒪᒃ ᐅᓇᓭᔪᓇᑐᒃ 100-ᒥ ᐱᓯᐊᓗᓂ ᐊᒪᓗ 600-ᔪᑦ ᑭᓇᓭᓂ ᑕᑯᓗᓯᑦ ᒪᐱᑐᕋᒃ ᓭᑕᒪᒥ 4-ᒥ

The thermometer on the oven door shows the temperature from 100 to 600 degrees.

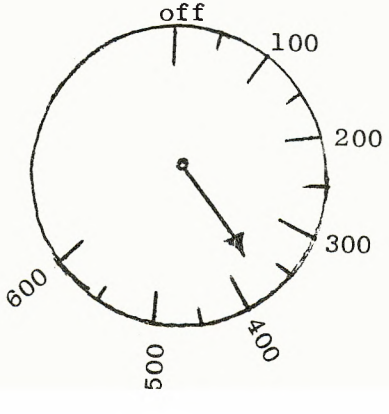

ᑲᓂ ᐅᓇᓕᑎᒋᐊᓪ ᐅᓕᕆᓂᓄ

How to Heat the Oven

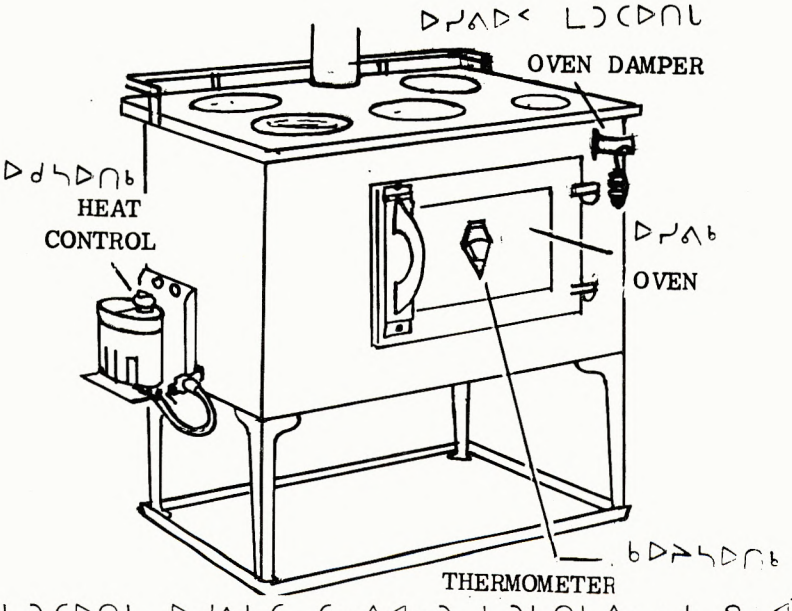

ᓄᓕᓗᒍ ᒪᑐᑕᐅᑎᓪ ᐅᓕᕆᓂᑦ ᑕᓚᐊᐊᓂᑐ ᒪᑐᒪᑎᒃᐃᓇᓗᒍ 2 ᐊᓪ-ᓂᓄ ᐅᓇᓕᒍᓇᐳᒃ ᒃᓂᒥᓂᓪ 2 ᐃᓂᓕᒃ ᒃᑐᒃ ᐅᓗᓂ ᐊᑯᓂ ᕈᐊ-ᒪᓗ 3-ᒥᓂᓕᒥ. ᐅᓇᑐ ᒃᓕᓪᐃᐅᓗᓂ ᐃᑯᒪᕆᓂᓄ ᑕᒪᐅᓪ ᐅᓕᕆᓂᑕᓗ ᐅᓇᓕᒥᐸᑦ ᒪᑐᓗᒍ ᒪᑐᑕᐅᑎᓪᓄ ᐅᓇᑐᑦ ᐊᓂᒍᓇᓂᐊᕆᒪᑦ ᑐᓕᐊᑎᒍᑦ.

Pull out on oven damper at right of oven and leave for 2 to 3 minutes.

Heat is drawn from the fire pot around the oven in a 2 inch space between the oven and the body of the stove. Once the heat is circulating, close the damper to keep the heat from escaping up the chimney.

ᐅᒃᓴᒥᐊᕐᑎᓪ 6-ᒧᓗᒍ ᓇᒪᓕᒥᓂᒪᒪᓂ ᐅᑯᓂᓪ ᑕᕐᓂ ᓕᕈᒍᐳ-ᐅᐳᓪᓂ ᓇᒪᓕᐸᑦ ᒃᓕᓂᒃ ᐱᒍᒪᒪᕐᑦ ᒃᐅᐳᔭᐅᑎᒥ ᑕᑯᒍᓇᑕᐃᑦ. ᐅᒃᓴᒥᐊᕐᓪ 3-ᒧᓗᒍᓗ ᑕᐃᒪ ᐅᑯᓂᓪᓂ ᓇᒪᒥᓕᕐᐃᐳᒃ.

Turn heat control to 6 until the temperature you want shows on the thermometer.

Turn heat control to 3 or 4 or whatever is necessary to keep temperature where desired.

Using the Oven for Heating

ᐊᑭᓯᒪᓯᐊᑎᓄᒍ ᒪᑐᑕᐅᑎᒪ ᖁᐅᒥᒪᓂ ᐅᓯᕕᐅᐸ ᐅᑯᐊᒪ ᒪᑐᓯ-
ᒪᓄᒍ ᐊᐳᓄᒍ ᐃᓄᒍᑦ ᐅᓯᕕᐅᐸ ᐅᑯᐊᒪ ᒪᑐᒪ ᒪᑐᐃᓄᒍ.
ᐅᑯᐸᒃ ᐃᒪ ᓄ ᐃᓄᐊᓂᒃᓂᐊᐳᒃ ᑐᓯᐊᑯᑦ ᐊᓂᐊᒍᓐᓇᕆᐳᒃ.

Have the direct draft damper at the right of the oven door closed (pushed in) and the oven door open. Heat will go into the house and not up the chimney.

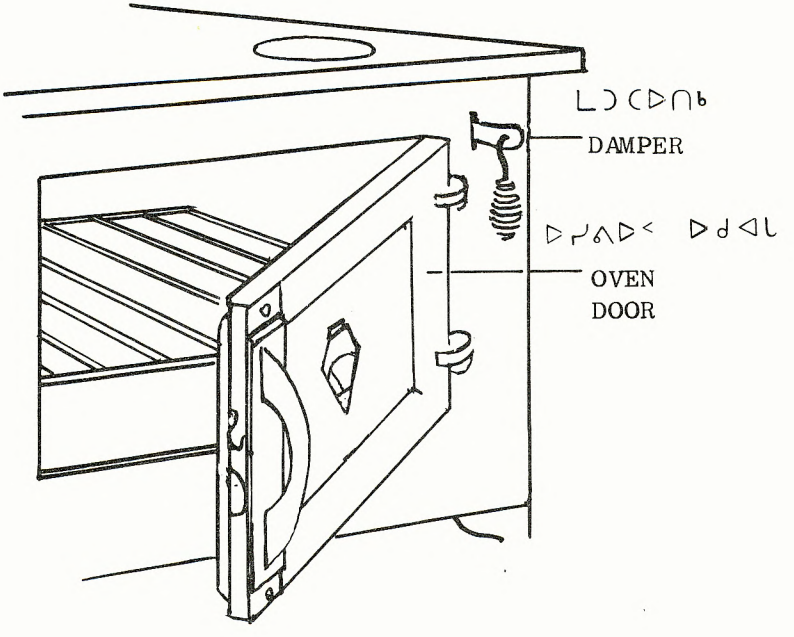

ᐅᓄᑕᒪᑦ ᑭᐊᓴᐅᑎᐅᑦ ᓴᓄᒪᓂᓴᐅᓂᒪ

Daily Cleaning of Stove

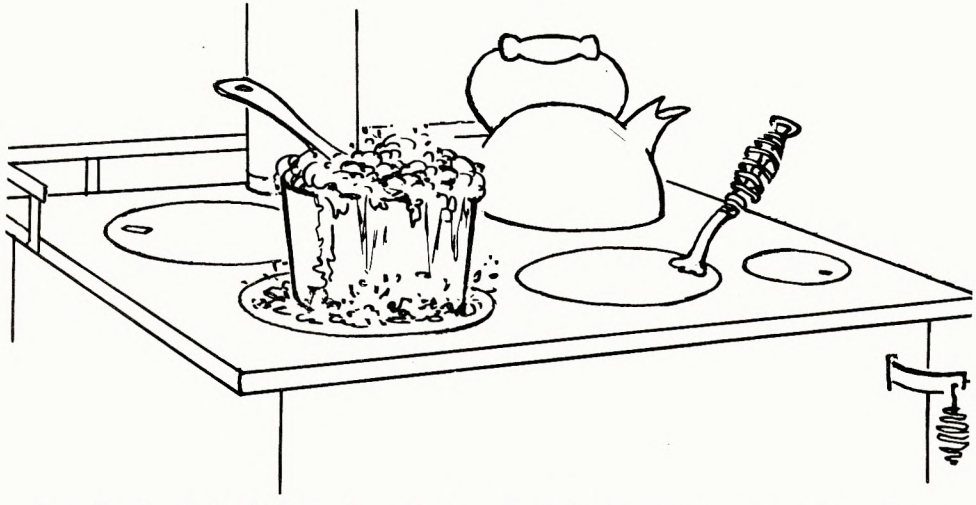

ᓴᓂᐸᓄᔪ ᑭᐊᓴᐅᑎᖅ ᐅᓄᑕᒪᑦ ᐊᓕᑭᑎᑎᒃ ᓭᑯᓴᐳᒥᓄᓂᑦ ᐸᐃᐸ-ᒥᒃ ᐊᑐᓄᑎᑦ. ᐊᓕᑎᐊᓴᐅᑎᖅᓄᑎᓄ ᑯᐃᓂᑯᑦ ᐊᓭᐸᓂᑯᑦ ᐊᓕᑎ-ᐸᓄᔪ ᐊᓯᒪᓯᒧᑦ ᖃᓄᓇᑕᒧᑦ. ᓂᑭᖅ ᑯᐃᐸᑦ ᐊᓭᐸᐸᑦ ᐅᓭᐃᒪᓂ ᐅᓭᐃᖅ ᑭᓭᐊᓂ ᓂᓪᑦ ᓴᓄᒪᓴᓄᔪ. ᐅᓭᐃᐅᐸ ᐃᓂᑕᐅᔾᒥᑦ ᐱᓄᒥᑦ ᐅᓭᐃᐅᐸ ᐊᑕ ᓴᐃᑭᓄᔪ ᓴᓄᒪᓴᓄᔪ. ᖃᐅᓯᓴᐃᓇᑭᐃᑦ ᓂᑭᓪᐊᓂᖅ ᐅᓇᓭᐊᓂᒪᓂ ᑎᑎᓂᐅᔾᒪᓂᒪᓂ ᐊᓭᐸᔾᒥᓪᓕ ᑭᐊᓴᐅᑦ ᓴᓄᒪᓴᑎᐊᒪ ᐱᔾᑎᐊᑭᓂᓴᐅᒪᔾᔨᖅ.

Dust off top of stove daily using paper or cloth.
Wipe up spills as soon as they happen with a damp cloth.
If food has spilled in oven, wait until oven cools then open the oven door, remove rack and scrape burnt food off bottom with a metal scraper.
If you watch food as it cooks, you can prevent it boiling over. This will help to keep the stove clean.

ᐱᓇᓯᐊᑭᓯᑕᒪᑦ ᓴᓗᒪᑎᐊᒃᓂᒪ ᑭᐊᓴᐅᑎᐅᐸᑦ

Weekly Cleaning of Stove

ᐅᓯᕕᒪᑕ ᐅᑯᐊᒪ ᐱᓄᒍ ᐃᓄᐊ ᓴᓄᒪᓴᑕᐅᐸᑦ. ᐅᓇᑭᓇᐃᑎᓄᒍ ᓯ-

ᓪᑕ ᓴᓄᒪᓴᓕᐸᑦ. ᑕᐃᒪᒃ ᐱᓄᒍ ᑕᑯᓄᒍ ᒪᐱᐅᖏ 30-ᒥ.

The oven door may be lifted off for cleaning. Let cool and clean outside of door as in instructions for cleaning porcelain. See page 30.

ᑕᑯᓄᒍᓄ ᐃᑯᒪᕕᒪ <ᐅᑦᒪᒪᑦ ᐊᑭᓬᒥᒃ. ᓴᓄᒪᓴᑎᐊᑦᑐᐸᑦ ᑕ-

ᑯᓄᒍ ᒪᐱᐅᖏᒃ 14-ᒥ <ᐅᑭᔭᑎᐊᑦᑐᐸᑦ.

Look in at burner to see if much soot is forming - there will be some. If it needs cleaning see page 14 for removing soot.

ᐊᔭᓄᒍ ᑲᐅᓴᐅᑎᒪ ᐅᒃᓯᒪᑕ ᐊᑯᑎᒪᓂᒪᓬ ᐊᑭᑭᑕᓯᐊᓄᓂᓐ ᑭᔭ-

ᓄᑦᑕᓄᒍ ᒪᑭᐊᑎᓄᒍ. ᑕᑯᓄᒍ ᒪᐱᐅᖏ 5-ᒥ.

Push cleaning rod on fuel line in as far as it will go and turn several times to clear line. Leave rod in "pulled out" position. See page 5.

ᑭᓪᓴᑦᑕᓄᒍ <ᐃ<ᒧᑦ ᓯᑯᓴᔭᒧᑦ ᐃᓪᓪᓬᒧᑦ

Polish top of stove with paper.

ᑕᑯᓄᒍᓄ ᑯᑐᐊᕕᒪ ᓴᑐᔭ ᑭᐊᓴᐅᑎᐅᐸᑦ ᐊᑕᓂᑦᑦ. ᐅᒃᓯᐊᓄᐃᓇᐅ

ᐸᑦ ᐅᒃᑐᓴᐅᔭᑎᑦ ᐃᓇᓪᑎᕗᒧᑦ ᑭᓪᒥ ᐅᒃᓯᐊᓄ ᐊᓯᐅᓬᒃ ᐊᒪᓄ

ᑭᓇᐅᔭᑎᑦ ᐊᓯᐅᑐᐃᓇᕆᒪᑕ ᐅᒃᓯ ᐊᓯᐅᐸᑦ . ᐊᒪᓄ ᐅᒃᓯᐊᓄ

ᓇᑎᒥ ᓯᕆᐃᓵᓪᐊᓬᓇᒪᑦ.

Look at drip tray under stove. If there is any oil in it tell the Housing Authority at once. Loss of oil may cost you extra money. Oil destroys linoleum floors.

ᐸᐅᒥᓴᑎᐊᒪ ᑭᐊᖏᐅᑎᐅᐸ ᐃᒪᕕᒪ

Removing Soot from the Cook Stove

ᖃᓗᒪᖏᑎᐊᒥᓂᒪᓂ ᑭᐊᖏᐅᑦ ᐃᒪ ᐅᑲᖏᐊᕈᑎᒪ ᒪᑐᓗᒍ.

ᐊᒪᓗ ᒪᑐᓗᒍ ᐅᑲᓭᑎᒪᑕ ᒪᑐᑕᐅᑎᒪ.

Before starting to clean the stove, turn heat control to 'off' and close shut-off valve at the oil tank.

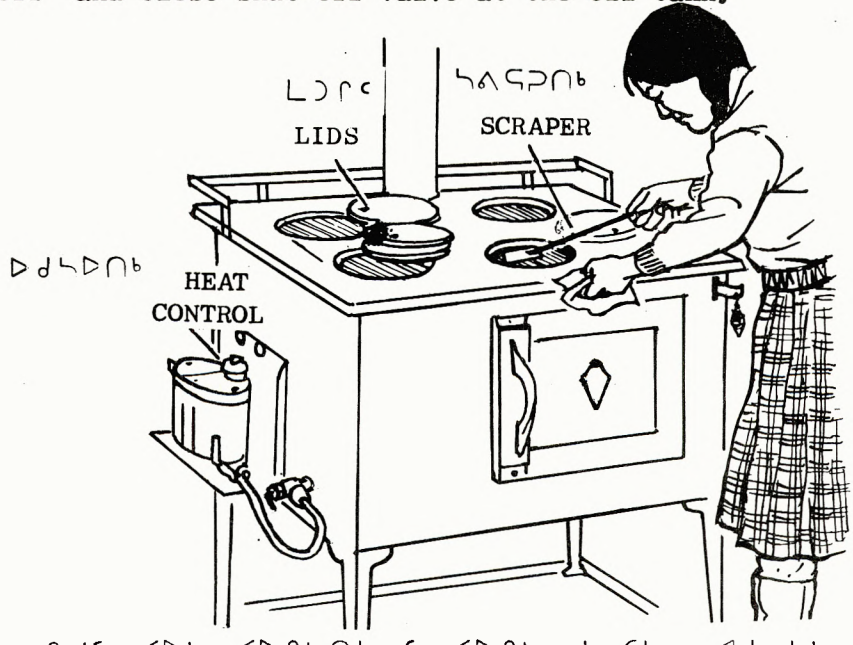

ᒪᓂᑭᓱᑦ ᐸᐅᑲ ᐸᐅᒥᓴᑎᒪᓂᑦ ᐸᐅᒥᓵᓗᒍ ᑕᒪᓇ ᐊᑯᓂᒪᑲ ᑭᐊ-ᖏᐅᑎᐅᓗ ᓭᓇᑕᓗ. ᐊᓂᕎᑕᓗᕕᒪᓗ ᑕᓇ (ᑕᐱᐊᑯᓂ) ᑭᐊᖏᐅᑎᐅᐸ ᖃᓗᒪᖏᓗᒍ. ᑯᑐᓂᑯᑦ ᐅᑲᓭᐊᓗᑲ ᖃᓗᒪᐃᑐᓗ ᖃᓗᒪᐃᑐᓗ ᐊᓇ-ᑎᐊᖏᐅᑎᒥᒃᑕᓗᒥᑦ ᑭᓇᒥᔪᓇᓭᐊᑐᑲ.

Loosen soot with metal scraper between oven and body of stove working from the top. Clean out at cleaning vent on the right side of stove. Dip out oil and dirt and wipe as clean as possible.

ᐸᐅᒋᓴᐃᓂᒃ ᑭᐊᓱᐅᒥᒃ (ᓂᓪ)

Removing Soot from the Stove (continued)

ᐱᓗᒋᑦ ᑯᓪᓗ ᐊᓪᓗ ᐃᑯᒪᐱᓚᓂᐅᑲ ᓂᓗᑎᒃ ᓱᓗᒪᓱᓗᒋᑦ. ᓱ-
ᓂᐅᑎᓂ ᐊᐧᓗᑎᑦ ᑕᐅᓪᒪ ᑭᐊᓱᐅᑎᐅᐸ ᓇᑕᒪᓪᑦ ᐸᐅᒋᓴᓗᔪ
ᐃᓪᓱᐃᓵᐅᐸ ᐃᒪᒪ ᐃᓪᓂᓂᐊᐸᑎᑦ.

Take out upper and lower burner plates and wipe off. Use a broom straw to open holes in lower burner plate. The Adult Educator will show you how to do this.

ᑕᓂᒧᒪ ᓱᐱᐳᒧᑦ ᓱᐱᐳᓗᔪ ᐃᑯᒪᐱᓚᓂᐅᑦ ᓱᓂᕆᓪᐅᑦ ᐊᑕᓂᐧ-
ᓗ. ᐊᓪᕆᑕᓗᐱᒪ ᑭᓪ ᓱᓂᕆᓂᐅᑲ ᐃᑯᒪᐱᓚᑕ ᐸᐅᒃᐧᑐᓱᐅᒋᓪᒃ

With the stove scraper, scrape soot off burner. Lift dirt out of fire pot and wipe sides and bottom clean. The air holes in the side walls of the burner bowl must be free of soot.

ᑕᑯᐊ ᐃᑯᒪᐱᓚᓂᐅ ᓂᓗᓪ ᐊᑭᓪᒥᓗᒋᒃ ᐃᓂᒪᓪᑦ. ᑕᓇ ᐊᓪᒃ
ᐃᒪᐃᐅᑦ ᑎᑎᒃᐃᑦ ᒃᓪᐅᑭᒋᐊᓪᑦ this side up ᓇᓪᒪᒃᒥᓪᑦ
ᐃᑯᒪᐱᓚᓂ ᓱᓂᕆᓂ ᐊᓂᒋᐅᒪᓪᓂᒃ ᑭᑭᐊᓂᒃ. ᑯᓪ ᑕᓇ ᐊᑭᐅᐃ
ᓇᑎᐊᓪ.

Put burner rings back into position. Bottom ring has "this side up" marked on it and rests on pins on the wall of the fire pot. Top ring fits on top of fire pot.

ᐸᐅᑭᓴᑎᐊᓕ ᑭᐊᓕᐅᒥᒃ (ᓯᓚ)

Removing Soot from Stove (continued)

ᒪᑐᒃ ᐱᓗᔪ ᐊᒪᓗ ᐃᓂᑕᐅᓴᑭᑦ. ᑕᑯᓗᔪ ᒪᐱᑐᕆ 4-ᒥ. ᓄᐱ-

ᑭᓗᔪ ᒪᐅᒃ ᓄᓂᕆᓂᑐᒃ ᐊᑕᓂᓗ ᐅᓯᐱᒃᑕ. ᑕᑯᐊ ᐅᒃᐅᓯᑦ ᐊᑐ-

ᐊᓗᑭᑦ ᒃᓄᒃ ᐊᓯᐳᓗᑭᑦ ᒪᑐᒃᓗ ᐃᓂᑕᐅᓴᑭᓗ.

Remove oven door and steel rack. See page 4. Scrape soot off sides and bottom of oven and clean out. Follow instructions on cleaning porcelain for cleaning oven door. Replace rack and door.

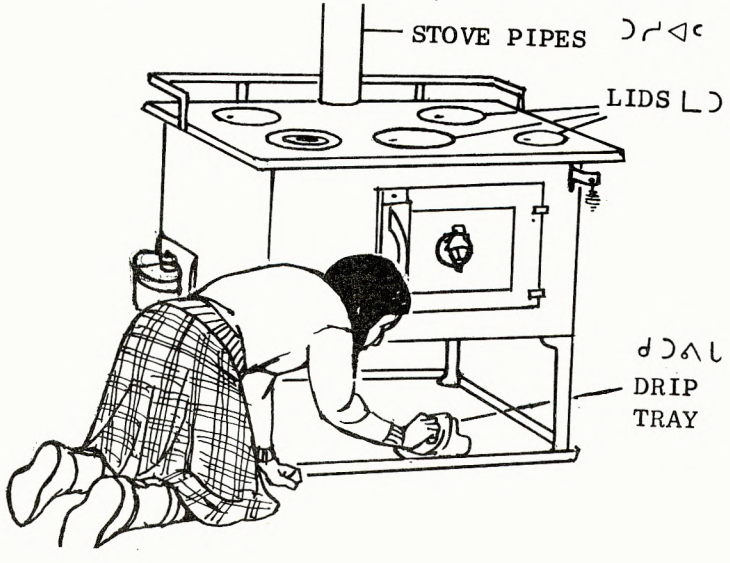

ᐊᓪᑎᓗᑭᑦ ᑯᑐᑦ ᓯᓴᐃᒃᓴᒧᑦ ᐃᒥᒧᑦ ᐅᐊᓴᐅᑎᒃᓗᓂ ᐅᐸᐅᔾᒥ

ᐅᐊᓴᑭᑎᒃᓗᓂ ᐅᐸᓗᓂ ᒃᓗᓐᑕᐃᓐᒥ. ᑭᐊᓴᐅᑎᐅᐸ ᒪᑐᑦ ᐃ-

ᓪᐅᒃᓪᒥᓗᑭᑦ ᑐᓯᐊᑦᓗ ᐊᓯᐳᓗᑭᑦ. ᐊᓪᑎᓗᔪ ᑭᐊᓴᐅᑎᐅᐸ ᒃᒪ

ᐸᐃᐸᒧᑦ. ᐃᑭᓗᔪᓗ.

Wipe out drip tray with warm soapy water using a sponge or cloth.
Put stove lids back on and replace pipes.
Wipe off stove with paper.
Relight burner.

ᑐᒃᓯᐊᑦ ᓴᓗᓴᕆᐊᓯᑦ

Cleaning Stove Pipes

ᑐᒃᓯᐊᓯᑦ ᐃᑐᒥᓗᑦ ᓇᒍᐊᓯᑎᒍᑦ ᓯᓚᒥ. ᑕᑯᐊ ᑐᒃᓯᐊᑦ ᐊᓇᐅᓚᓗᑦ ᑭᓴᒧᑦ ᒪᐅᒪᓂᓂ ᓂᓇᒧᑦ ᐃᓕᒃᓚᑕᓗᑦ ᐳᐅᒪ ᐱᑎᓯᐊᓗᒍ.

Take pipes apart and take outdoors.
Slap pipes with a stick or knock on the ground to loosen soot.
Soot may also be scraped off with a long-handled scraper.

ᓯᓚᒧᐊᓕᓂᓕ ᑐᓴᐅᑉ ᓴᓗᒪᓴᑎᐊᓕ

Cleaning the Chimney

<ᐅᑲ ᑲᓴᐊᑭᓇᒥᑐᓕᓗᐊᑲ (ᐃᒪᐃᑐᑲ ᑐᓴᐊᑲ. (ᑯᐊ ᑐᓴᐊᑉ ᐱᓴᒧᐊᓂᑉ. (ᑯᓗᔪ ᑐᓴᐊᓕ ᓯᓚᒧᐊᓕᓂ. ᓴᐱᑭᓗᔪ <ᐅᑲᓪᑉ ᓴᓂᕆ (ᒪᓇ ᑐᓴᐊᑉ. ᐱ(ᓴᓗᔪ ᓇᑎᑲ <ᐃᐸᒥᑲ ᑲ(ᓕᐱᓴᒥᑲ ᐊᓴᐳᓗᒥᑉ ᑐᓴᐊᑉ.

Soot does not generally gather in this type of chimney. When you have the stove pipes off, look up into the chimney. Scrape off any soot that may be on the sides. Place a paper on the floor to catch the soot which drops out. Replace the stove pipes.

ᐅᑯᖏᐅᑦ

The Heater

ᓭᓕᑎᐊᒪᑦ ᒪᑐᒪ

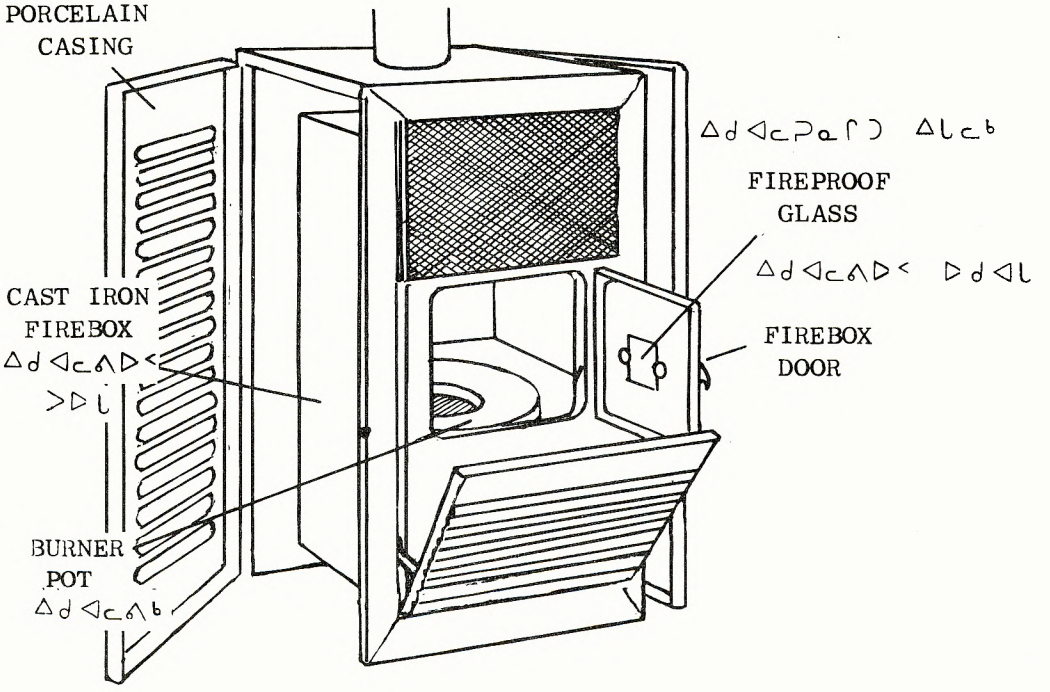

ᑕᑯᐊ ᐅᑯᖏᐅᑎᑐᐃᓇᑦ ᑭᐊᖏᐅᑎᑦ ᑭᓭᐊᓂᓂ ᓭᓂᓴᓂᓂ ᐱᒪᓭᓂᒃ ᐱᑕᒃᓴᑦ. ᖏᓂᕿᔪᑦ ᒪᑐᐃᓇᑐᒃᓴᑦ ᐃᓅᓴᒃᑐᓴᒃ ᑐᓂᓭᓕᔪᑦ ᐃᓅᓴᐊᓕᒪᓂᑦ ᐊᓂᔪᓇᓂᐊᓕᒫᑦ. ᑕᓇ ᐅᑯᑎᓭᐃᓇᑐ ᐃᓅᓴᐅᓯ ᐃᓅᓴᐊᓂᒃᑐᓴᒃ ᑐᓭᐊᒪᔪᑦ ᐊᓂᔪᓇᓂᐊᓕᒫᑦ.

Heaters are in the 3 bedroom houses only. Sides open out for more and greater heat. This keeps the heat in the room instead of being lost up the chimney.

ᐅᑯᖏᐅᑦ (ᓂᓪ)

The Heater (continued)

ᐃᑯᒪᓂᒍᓐ ᐊᒪᓗ ᑕᐃᒪᖏᐃᓇ ᓂᓯᐅᑭᑎᑐᑦ ᐃᒪᑎᑐᑦ ᐱᓂᒍᓐᓴ.

ᐊᒪᓗ ᐃᓕᕆᑲᑎᓐ ᑯᑐᐊᕐᒪᓂᓄ ᓇᑎᖏᓄᓴ ᓇᑎᒥ ᓂᕆᐃᑯᓇᒍ.

The heater lights and works the same as the stove. It also stands on a steel drip tray to protect the linoleum.

ᑕᓇ ᐃᑯᒪᐃᒪ ᓂᓪᐱᐊᐸᒪᒃᑦ ᒪᑐᐃᑕᑐᒃᓂᓄ ᖏᓄᕆᑎᑎᒍᑦ ᐅᑯᓇᑐᒥ

ᐊᓄᐊᓂᐃᕆᓄᴳ ᓇᒍᑐᐃᓇᓄ. ᑕᑯᐊᓪ ᒪᑐᓪᒪᑎᑦ ᒪᑐᐃᒪᐸᑕ ᑕᒪᓇ

ᓂᓪᐱᐊᒪᒪ ᐅᐊᖏᕆᖏᑐᕆᓴᐳᒃ ᓄᓪᒪᓴᓄᒪᓄ.

The cast iron firebox has an outer porcelain covering with sides and front openings to allow heat to flow out in all directions. If the side and front casings are left open you will get faster heat and the casings will cool to allow for washing.

ᐃᑯᒪᐃᒪᓗ ᒪᑐᒃᓴᒃ ᐃᑭᓂᐃᒪᓄ ᐃᒪᓪᒃᑲᓂᓄ ᐃᑯᐊᓪᔪᓇᑎᑐᒥ

ᑕᑯᓇᐃᒪᓄ ᐃᑭᐸᓪᐊᓄᒪᓄ.

The firebox has a door opening into the fire pot for lighting and a small fireproof glass window for watching the burner in operation.

How to Light the Heater

ᐃᓕᓴᐃᕕᒧᑦ ᐃᒪᒪ ᐃᓕᓵᐅᓂᐊᐅᑎᑦ ᐊᓱᐊᓄᓗᓂ ᑲᓄ ᑲᑎᓴᑲᒥᓱᒪ ᓂ.

The Adult Educator or someone else will show you how to do this the first time.

ᒪᑐᐃᓗᒍ (ᓇ ᓱᓕᕆᓂᑐ) ᑭᐊᓴᐅᑎᐅᑦ ᒪᑐᐃᓗᒍᓗ ᐃᑯᒪᕙᒪ (ᒪᑐᒪ (ᑯᓗᒍ ᒪᐱᑐᕆ 19-ᒥ.

Pull down the casing at the front of the heater and open the firebox door. See page 19.

ᓵᖅᓴᑎᒪᓱᐊᓂᒪ ᓇᑭᓗᒍ (ᓇ ᖃᓪᓕ(ᒪᓂᑐᖅ ᐊᒧᑦ ᓴᓂᕆᓂᑐᖅ ᐅ-

ᑯᓴᐅᑎᐅᑦ. ᐊᒪᓗ (ᓇ ᖃᐅᓴᐅᑎᒪ ᐱᓱᒪᓗᒍ ᐊᒧᓱᒪᓗᓂ ᐃᑯᒪᕙᒪᓂ

Start oil flowing by pressing down on the trip lever of the oil feed box beside the heater.
Make sure the cleaning rod in the oil line is pulled back out of the burner pot.

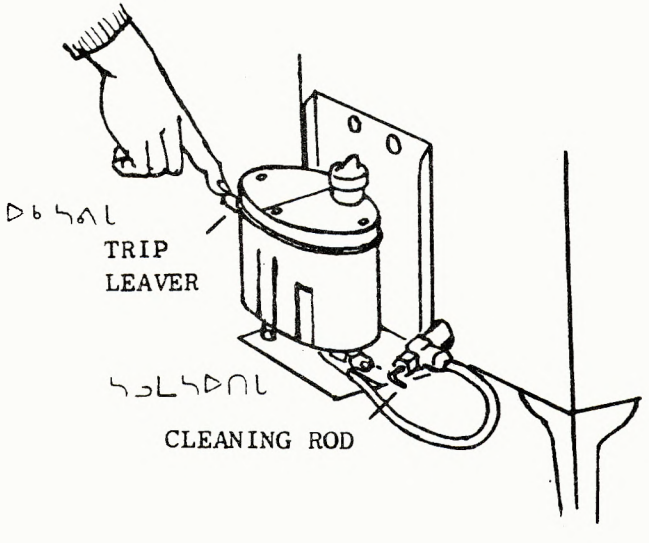

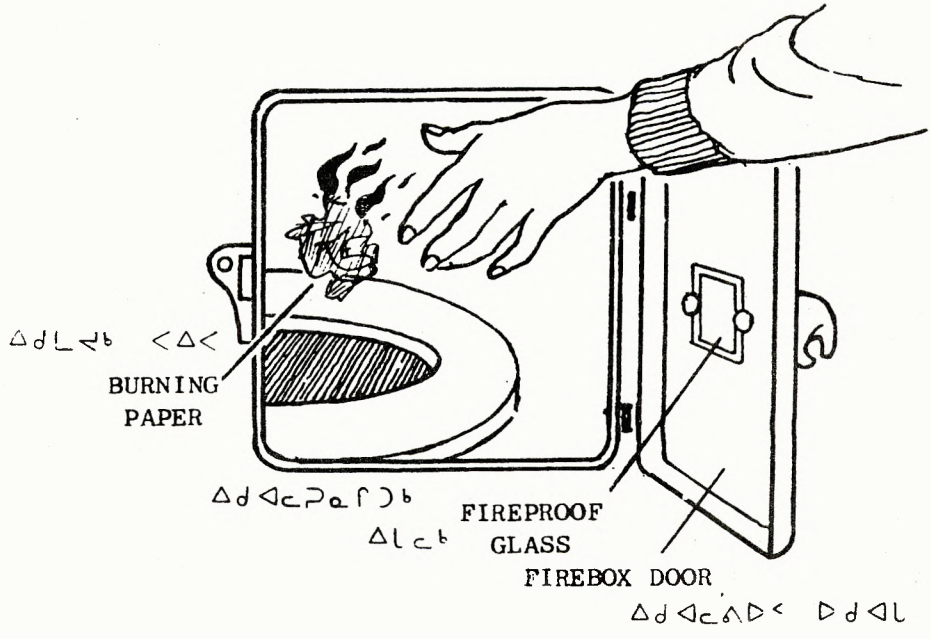

ᐅᑯᓕᒋᐊᔪᑎᓗ 6-ᓗᓄᒍ. ᐅᒃᖏᓗᓕᓕᒪᓗᓐ ᒃᐅᐳᖏᓄᒍ ᓇᑕᓗ ᐃᑯ-

ᒪᕕᓗᑕ ᑕᐃᒪ ᑕᓇ 1-ᓗᓄᒍ ᓯᐃᓯᒍᑦ ᐃᑭᓄᒍ.

Turn heat control to 6. Watch for a small amount of oil to appear in the bottom of the burner pot. Turn heat control to 1 and drop a lighted piece of paper into the oil.

ᒪᑐᓄᒍ ᐃᑯᒪᕕᓗᑕ ᒪᑐᓗ. ᑕᑯᓇᓄᒍ ᑕᐅᓗ ᐃᓗᓕᓗᒍᑦ ᐃᑯᒪᓱᐊ-

ᖏᓄᓯᒪᓗᑦ. ᒪᑐᓕᒥᓄᒍ ᓱᓕᐱᐊᓗ ᒪᑐᓗ.

Shut firebox door. Look through glass window to see that the burner is working.
Close the front casing.

ᑲᑐᑕᒪᖅ ᓴᓪᒪᓴᑎᐊᓕ ᐅᑯᓴᐅᖅ

Daily Cleaning of the Heater

ᓴᓪᒪᓴᕐᔪᑲ ᑕᑎᐊᑲᓗ ᐅᑯᓴᐅᖅ ᑲᑐᑕᒪᖅ. ᓯᔪᑎᓂᕆᑲ ᑕᓪᒍ ᑲ-
ᓪᓚᑕᒧᖅ ᓯᓂᑐᒧᖅ.

The heater needs very little daily cleaning. Dust off daily with a clean dry cloth.

ᓯᐃᒍᑕᐃᓕᓪᒍ ᐅᓚᒪᖅ ᐅᑯᓴᐅᖅ. ᓴᓂᐊᓄᕆᑎᐊᑲᒥᖅ ᓯᐃᓯᒥ

ᑲᓪᓚᑕᒥᓪᓂ ᑕᐃᒪ ᐃᕈᑐᑲᑐᐃᓚᐊᑲᒪᖅ.

Remember that the heater is hot.
Never set papers or clothing on or too near it as this may cause a fire.
Keep small children away from the heater.

ᐱᓇᓴᐅᓴᑕᒪᑦ ᓴᓗᒪᓴᑎᐊᒪ ᐅᑯᓴᐅᑦ

Weekly Cleaning of the Heater

ᐅᑯᓴᐅᑎᒪ 2-ᒧᓗᔪ. ᒪᑐᒋᑦ ᑕᒪᒥᒃ ᓂᓪᓴᒥᓕᓴᐊᑎᓗᔪ. ᑎᑎ-
ᕿᓕᓴᑦ ᐊᑐᓗᒋᑦ ᓴᓗᒪᓴᓗᔪ. ᑕᑯᓗᑎᑦ ᒪᐱᕿᒥ 30-ᒥ.

Turn heat control to 2. Open porcelain side and front casings to let them cool. If dirty follow directions for cleaning porcelain. See page 30.

ᖃᐅᐳᓴᓗᔪ ᐃᑯᒪᕕᒪ <ᐅᖃᒪᒋᑦ. ᓴᓗᒪᓴᑎᐊᖃᐳᑦ ᑕᑯᓗᔪ ᑎᑎᖃᐃᑦ
<ᐅᒋᓵᐃᓂᒥᖃ ᐅᖃᑐᑦ ᒪᐱᑐᕿᒥ 14-ᒥ ᐊᒪᓗ ᒪᐱᑐᕿ 15-ᒥ

Check firebox for sooting. If it needs cleaning, see notes on Removing Soot page 14 - 15.

ᐱᓵᑎᐊᖃᑎᑐᖃ ᑕᓇ ᖃᐅᓴᐅᑎᒪ ᐅᖃᓕᒃᓂ ᑕᐃᒪᓴᐃᓇ ᐱᓇᓴᐅᓴ-
ᑕᒪᑦ ᑭᐊᓴᐅᑎᑐᐃᓇᑎᑐᑦ. ᑕᑯᓗᔪ ᒪᐱᑐᕿ 13-ᒥ

Operate cleaning rod on fuel line in same way as in "Weekly Cleaning of Stove."
See page 13.

ᖃᐅᐳᓴᖃᑕᓗᔪ ᐃᒪᒋᖃᓗᐊᒪᒪ ᐊᓂᕿᒪ.

Check drip tray for oil leakage.

ᐸᐅᒋᓴᑎᐊᒐ ᐅᑯᓴᐅᑦ

Removing Soot from the Heater

ᑕᓇᓪ ᐃᒪᒃ ᒪᑭᑎᓄ ᐊᑕᐅᓂᒃ ᓴᓄᒪᓴᑎᐊᒃᓴᒃ. ᐱᓵᓄᒋᑦ ᑐᓂ-

ᐊᒋᑦ ᓴᓄᒪᓴᓂᐊᓪᓚᑦ ᐊᒪᓄ ᓂᓪᒍᐊᒐᓂᒐ ᑕᑯᓄᒋᑦ ᒪᐱᑐᕐ 17-ᒥ

This may need to be done twice a year. Remove and clean pipes and chimney. See page 17.

ᒪᑐᐃᓄᔪ ᓂᕆᒐᓂᑐᒃ ᓴᓂᕐᓂᓄ. ᑕᑯᓄᔪ ᒪᐱᑐᕐ19-ᒥ. ᒪᑐ-

ᓄᔪ ᐃᑯᒪᕿᒐᑦ ᒪᑐᒐ ᑕᑯᐊ ᐱᓄᒋᑦ ᓂᓄᓪ ᐃᑯᒪᕿᒐᓂᑦ. ᑕ-

ᑯᓄᔪ ᒪᐱᑐᕐ 19-ᒥ. ᐸᐅᒋᓴᓄᔪ ᐃᑯᒪᕿᒐ ᐊᒪᓄ ᓂᓄᓪ ᑕᑯᐊ

ᑐᓂᐊᒋᓄ ᐸᐅᒋᓴᓄᒋᑦ.

Open porcelain casing on front and sides. See page 19. Open cast iron door on firebox and lift out burner plates. See page 19. Clean firebox, plates, pipes and chimney as outlined in "Removing Soot".

ᓴᓄᒪᓴᓄᒋᓄ ᐃᔪᑎᒐ ᒪᒪᕐᐅᓴᒃ ᑕᑯᓄᔪ ᒪᐱᑐᕐ 30-ᒥ.

Clean porcelain enamel casing as outlined in Porcelain Enamel on page 30.

ᐊᓯᑎᐊᓄᒋᑦ ᑯᑐᑯᐃᑦ. ᑕᑯᓄᔪ ᒪᐱᑐᕐ 16-ᒥ.

Wipe out drip tray. See page 16.

ᑕᑯᐊ ᐃᑯᒪᕿᒐ ᒃᓄ ᐱᓂᔪᒪᒐ ᐃᓯᓴᐃᓐᒃ ᐃᒪᒐ ᐃᓯᓴᐅᑎᓂᐊᑐᑎᑦ.

Reassemble burners and pipes.

ᐃᑭᓄᔪᓄ ᐅᑯᓴᐅᑦ.

Relight heater.

ᓂᒪᑦ ᑭᐊᓴᐅᑎᓂ ᐅᑯᓴᐅᑎᓂᓗ ᐱᑐᐃᓐᐅᒋᑐᒥ ᓴᓗᒪᓴᑎᐊᖅᐸᑦ

Why Your Stove and Heater Need Special Cleaning

ᐸᐅᖅ ᓄᐊᐸᓕᐊᒪᑦ ᐃᓗᐊᓂ ᑐᓂᐊᑦ ᐃᑯᒪᐱᒐᓗ ᐊᒪᓗ ᐊᑯᓂᒐᓂ ᐅᓂᙱᒐᑕ ᑕᒪᑐᒪ ᓂᓪᐸᓕᐊᒐᑕ ᐊᑯᓂᒐ ᐸᐅᒥ ᐱᓪᓕᐊᒪᑦ ᑕᓐᓂ ᐊᕿᔪᑕᒪᑦ ᑭᓂᑐᐊᓂ ᑭᓴᓴᓗᑎᐊᓕᖅ.

Soot collects inside stove pipes, in the firebox and firepot and in the space between the oven and the body of the stove. This must be removed at least once a year.

ᐸᐅᖅ ᐱᐅᑎᓂᔪᓇᒥᒪᑦ ᑭᐊᓴᐅᒥ ᐅᑯᓴᐅᒥᓗ ᑕᐃᒪᑕᐅᖅ ᐊᑕᓇᑎᐅᖅ ᐸᐅᓂ ᐃᓪᓕᐊᓂᐊᓕᖅᐸᑦ ᑕᐃᒪᓂᐊᓂᐸᑦ ᐅᓂᒃᑲᐊᓂᐊᓕᖅ.

Soot prevents the stove and heater from working properly and can be dangerous. If soot in pipes starts to burn it may cause a fire.

ᑭᐊᓴᐅᑦ ᐅᑯᓴᐅᓗ ᑲᒥᒃᓵᓴᐅᐅᓵᑦ ᓴᓗᒪᓴᓗᒥᑦ. ᑕᐃᒪ ᐱᓵᑎᐊᖅᐸᑦ ᑕᓇ ᐅᑯᓂᕈᑎᐊᑭᑎᒃ ᒪᑐᓗᔪ ᐊᒪᓗ ᐅᖅᓂᖅᐅᑎᒃ ᒪᑐᓗᔪ ᐊᓂᒥᓗᔪ.

The stove or heater must be turned off for thorough cleaning. To do this turn the heat control to "off" and turn the valve on the oil tank off.

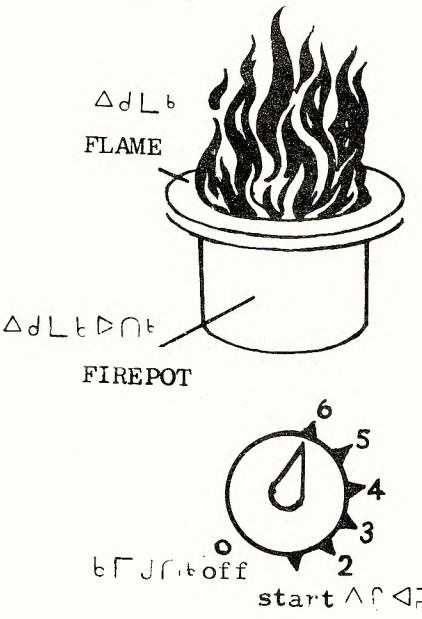
ᐃdᒪᑲ
FLAME
ᐃdᒪᑲᐅᑎᑦ
FIREPOT
6
5
4
3
2
o
off
start

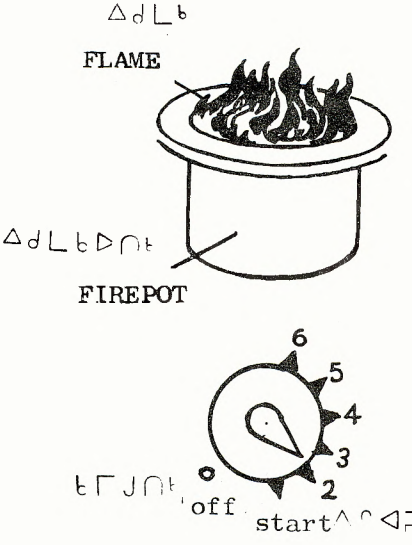
ᐃdᒪᑲ
FLAME
ᐃdᒪᑲᐅᑎᑦ
FIREPOT
6
5
4
3
2
o
off
start

ᑲᓂ ᑭᐊᖏᐅᑎᐅᑦ ᐅᑯᖏᐅᑎᐅᓗ ᐱᔾᑎᐊᑲᓂᒥᑦ

How the Stove and Heater Should Work

ᐃᑯᒪᒪᓕ ᑯᓯᑕᔾᑎᒥ ᐃᑯᒪᓴᖏᐅᕗᑲ ᐅᑲ ᖏᒥᐊᑭᑎᒪ 6-ᒥᐸᑦ ᐃ-
ᑯᒪᒪ ᕗᑐᓴᓂᐊᕗᑲ ᐅᑯᖏᑐᒪᑎᐅᓗᓂᓂ.

The fire should burn with a clear yellow flame. When the heat control is at 6 you get the highest flame and the most heat.

ᐅᑲᐅᑎᓗᔪ ᐃᓗᓂᑎᐳᑲ ᐃᑯᒪᕙᒪ ᓂᐱᑲᐸᑦ ᕗᓴᐸᓗᓂᑦ ᑕᓇᓗ ᐊ-
ᓄᕿᑕᓗᕙᒪ ᒪᑐᐃᑕᒥᐸᑦ ᐃᑯᒪᑭᐸᓗ <ᐅᑲ ᐱᓯᓂᐊᒪᓵᕗᑲ ᑐᓭᐊ-
ᒪᓂᓗ. <ᐅᑲᓗᐊᑭᓂ ᐃᑭᐸᓂᐊᑐ ᐃᓇᑎᐊᑲᒪᑦ ᐃᑭᓴᑕᐅᑐ ᐃᓇᑎᐊᑎᕗᑲ

Tell the Housing Authority if the burner is noisy or smokes.
If there is not enough draft or the heat control is set too low, soot will form on the inside parts of the pipes and chimney.
If too much soot forms it may start to burn and cause a fire.

ᐅᑲᐊᓗ ᐃᒪᐸᑦ ᐊᓂᕿᒪᓄᑦ ᒪᑐᑕᐅᑎᒪ ᐅᑲᓭᒪᑕ ᒪᑐᒋᐊᑲᕗᑲ
ᐊᒪᓗ ᐅᑲᐅᑎᓗᔪ ᐃᓗᓂᑎᐳᑲ ᑭᓇᒥᑯᑦ.

If there is oil in the drip pan, turn the controls off and tell the Housing Authority immediately.

ᒪᒪᕋᐅᓗᒃ ᓗᒃ ᒃ

Porcelain Enamel

ᒪᒪᕋᐅᓗᒃ ᓗᒃ ᐊᓕᔪᐅᑐᒃ. ᒥᓕᓴᔪᒪ ᑲᔪᓚᔪᓂ. ᐃᓱᐸᐅᑕᒧ ᐊᑐᑲᑦᑕᑕᒪᓂ ᒥᓕᑐᐃᓇᑎᐊᑲᑎᕐᒃ.

Porcelain enamel is like glass. It will break if hit hard. A chair rubbing against it may chip it.

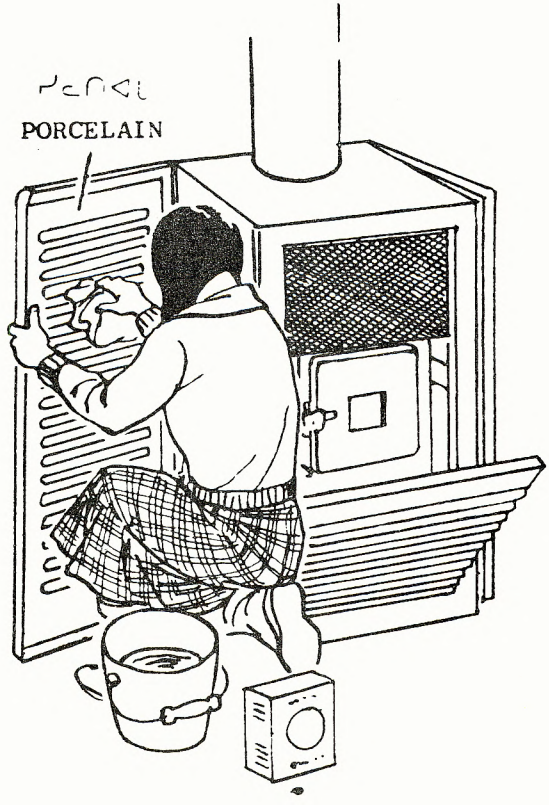

ᑲᓇᕐᓂᖅ

How to Clean

ᑲᓇᕐᓂᐅᔪ ᐱᓕᕆᔨᑦᑐᖅ ᑲᑎᒪᔨᖅ ᐊᓂᒃᑲᓂᐅᔪ ᑲᓇᐃᓐᓇᓐᓄᖅ ᑭᓚᐅᒋᐊᓂᕐᓂᖅ. ᑲᓇᐃᔪᒋᑦ ᐱᓕᓂᒋᑦ ᓂᓚᓐᓂᐅᔪ ᐅᐊᕆᕕᐊᖅ ᐃᒋᐅᓂᒋᔪ ᐅᐊᕆᐅᑎᒋᔪ ᐊᑐᓂ ᐅᓪᓗᑎᒃ ᐅᐊᕆᐅᒋᒃ ᐃᓕᐃᓐᓇ ᐅᐊᕆᐅᓂᖅ. ᐊᓂᓐᓂᐅᔪ ᑲᓇᕐᓂᒋᑦ ᐊᓂᕗᒋᑦ ᖃᐅᔨᐅᒋ-ᐅᒋᑦ ᐊᓱᐊᓂ ᐱᒋᐊᒋᓂᓂ.

It is very easily cleaned. Daily dusting will keep it bright and shining.
To remove dirt, wash when cool with warm soapy water - use a detergent in the water.
Do only a small area at a time.
Dry with a clean dry towel before doing the next section.

ᑭᓪᑕᐅᓗ

Chrome

ᑭᓪᑕᐅᓗ ᓯᑎᐊᕐᒃ ᖃᐃᕆᒃ ᑭᓪᖃᒪᐊᕐᔪᑐᒃ ᐅᑭᑐᖃᕐ ᐱᐅᓂᖏᓐᓇᖅᑐᖅ ᐱᒪᕐᒪᑎᐊᓂᖃᖅᑐᑦ ᖃᓄᒪᑎᓇᓯᓄᒍ.

Chrome is a hard shiny metal that looks like polished silver but wears better and requires less care in cleaning.

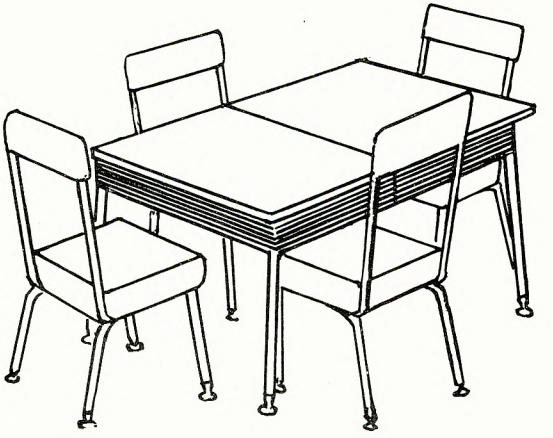

ᐅᑯᐊ ᓯᓇᑯᑦ ᐃᒪᒃ ᑭᓪᑕᐅᓂᐊᕐᑦ ᑭᐊᖃᐅᑎᐅᑦ ᓯᓇ ᖃᓄ ᓯᓇᔪᒍᑦ ᐊᒪᓂᓄ ᐃᓕᓴᐅᑕᐃᑦ ᐅᐊᖃᐃᓄ ᑯᐃᐃᓄ ᓯᕿᑕᑎᐅᓄ ᑎᒃᑎᑎᓯᐅᓄ ᐅᓇᑐᓕᐅᕗᑦ.

These Things May be Made of Chrome - trim on stoves, framework of table and chairs, bathroom taps, electric toaster, percolator.

ᒃᓄ ᐱᓕᑎᐊᒪᓗ ᑭᓪᑕᒃ ᐱᓕᑎᐊᑭᑐᖅᒃ ᐱᒪᓄᒍ ᐅᐊᖃᓄᒍ ᓯᖃᐃᔪᓐᓇᖅᑐᑦ ᐅᐊᖃᐅᑎᒃᓄᓂ ᐊᒪᓄ ᖃᓄᒪᔪᒍᑦ ᐸᓂᒍᑦ ᐊᓪᑎᓄᒍ.

How to Care for Chrome

It is easily cared for. Wash with warm soapy water and wipe dry with a clean dry towel.

ᐱᒪᑎᐅᓴᑦ ᐅᑲᓕᓯᐊᑎᐊᑲᓪᑦ

- ᐃᑯᒪᐅᐸ ᒥᕆᓄᑦ -

IMPORTANT - READ CAREFULLY
- Fire Hazard -

ᐅᓇᓂᒥᑦ ᑭᐊᕆᐅᑎᐅᐸ ᐅᑯᕆᐅᑎᐅᓗ ᐊᒪᓗ ᐃᓚᐅᐸ ᑭᐊᕆᐅᑎᐅᐸ

ᑐᓯᐊᒥᑦ ᐊᑕᓇᑐᒪᑕ ᑲᓂᒥᖅᑲᐸᑕ ᐊᑭᓇᒥ ᑯᑕᓂᓗᓂᑦ.

Hot parts of the stove, heater and stove pipes are dangerous if placed too close to walls or ceilings.

ᐃᒪᖅ ᑕᑯᐊ ᑭᐊᕆᐅᓗ ᐃᓚ ᐅᑯᕆᐅᓗ ᑲᓂᕆᒥᓂᑲᖅᑎᐊᑲᓴᑦ. ᐃᒪᖅ

ᐊᑕᓇᐃᖅᓗᔪ ᑭᓴᖅ ᐊᒥᐊᓗᔪ ᐊᑭᓇᖅ. ᑲᓂᒥᓂᓚ 18" ᐅᓚᑕᓗᓂ

ᐊᒥᐊᓯᒪᒥᑐ ᐃᑯᐊᑕᔪᓇᒥᑐᕆᖅ ᑭᓴᖅ ᑕᑭᓂᓚ 16" ᐅᓚᑕᓗᓂ

ᐊᑭᓇᒥ ᐃᑯᐊᑕᖅᐃᑯᑕ ᑭᐊᕆᐅᐸ ᐅᓚᑕᓂ ᐊᒪᓗ ᐊᓄᕿᑕᓗᐱᑦ ᑲᓂᒥᓂᓚ 8" ᐅᓚᑕᓗᓂ.

Leave at least this amount of space between the stove or heater and the wall:

Unprotected, painted wooden walls ....18" or more
Unpainted plaster with wood lath ....16" or more
Walls protected by bright tin shield with air space between ..... 8" or more

ᐃᒪᖅ ᐊᑭᓇᐅᐸ ᐃᑯᐊᑕᑎᑯᑎᓚ ᐊᑭᓇᒥᒥᓇᑐᕆᖅ ᑲᓂᒥᓂᓚ 2"

ᐊᑭᓇᒥ ᐊᒪᓗ ᐃᑯᐊᑕᖅᐃᑯᑕ ᒪᑐᐃᓗᔪ ᑲᓚᓂ ᐊᒪᓗ ᐊᑕᓂᑐᖅ ᑕᐃᒪᖅ ᐊᑭᓇ ᐅᓂᐊᒥᒪᖏᑦ

***(NOTE: Metal shield should be attached to wall on posts so as to keep a 2 inch space between wall and shield, open at top and bottom. This protects the wall from overheating.)**

ᑐᓯᐊᐸ ᐅᓇᓂᓚ ᑭᐊᕆᐅᒥᖅ ᐊᑐᐊᓴᖅ ᑭᐊᕆᐅᐸ ᐃᑯᐊᑕᑎᑯᑎᓚ

ᒪᒥᑕᓚ ᐊᒪᓗᓂᑦ ᐃᑯᐊᑕᑎᑯᑎᖅᑲ ᐊᑕᕿᓚ ᐊᑐᑕᐅᒥᓇᑐᕆ ᑭᐊᕆᐅᐸ

ᐅᑯᕆᐅᓗᓂᑦ ᓯᓇᑐᐃᓇᒥᖅ ᑕᓯᒥᓚ ᐅᔪᓇᑐᒥᖅ ᓇᑎᒥᑐᓗ.

Stove pipes are hottest nearest the stove. A fireproof stove board or some fireproof covering should always be placed under any stove or heater set on a floor that will burn.

ᑲᒪᒋᓂᐊᕐᓂᐊᑲᓂᕐᓂᒃ ᑭᐊᖅᑎᒥᑲ ᐊᑐᓄᓂ

Safety in Using the Stove

ᐃᑯᐊᓕᕆᒪ ᐅᖃᓂᐊᓄᑲᖅᑎᑐᑎᑐᑲ ᐃᑭᒪᓂᓕᐃᓐᓄᑦ ᓂᐅᓕᐊᒥ

ᑦᓂᑐᓄᐊᕐᓐᓄᑦᓂᒃ ᑭᐊᖅᐅᐊ ᑯᓕᓂ ᓂᑯᕿᕐᓐᓄᑦᓂᒃ ᐃᑭᒪᓂᓄᑦ

ᑭᐊᖅᐅᐊ ᐃᑯᐊᓕᕆᒪ.

The fire bowl should be free of oil before lighting a new fire.
Do not stand directly before or over the firebox when lighting the fire.

ᐃᒪᔪᑎᐱᓂ ᑎᔪᕆᒪ ᑐᓄᒪᓂᓄᑦᓂ ᐱᐊᕿᐃᓂ ᑕᐃᒪᒃ ᐊᑐᑭᓐᓄᐊᓂᐊᑐ-

Turn pot handles to back of stove so small children cannot reach them.

ᒥᒪᒋᑦ ᑲᓗᓇᑦᒥ ᐊᑐᓗᑎᑦ ᐃᓚᔪᑎᑎᓂᑲ ᕿᐊᖏᐅᑎᒥᑐᓂᑲ
ᐱᓯᔪᕐᓴᑦ

Use a potholder when moving hot pots or pans.

ᑲᐅᕕᒪᓯᐊᓗᑎᑦ ᐅᑲᓯᒥᑲ ᐃᓚᔪᑎᑲᕈᕐᓴᑦ. ᐅᓇᓯᓗᐊᕈᓂ ᐅᑲᓯᑲ
ᐱᓯᓚᑲ ᐃᑯᐊᓪᑎᓯᔪᓇᒪᑦ ᐊᒪᓗ ᐅᑎᓯᔪᓇᓚᑲ. ᐅᑲᓯᑲ ᐃᑯᐊᓪ-
ᑎᓯᐸᑦ ᐃᓚᔪᑎᑎᓂᑲ ᑲᒥᓗᔪ ᐃᓚᔪᑎᐱᑦ ᒪᓚᒪ ᐃᓪᓗᔪ.

Be careful when cooking with fat. Overheating causes it to splatter out of the pan and can cause a burn or fire. If fat catches on fire in the pan, smother it by putting a lid on the pan.

Safety in Using the Stove (continued)

ᐃᑯᐊᓪᓚᒃ ᐱᒋᐊᓱᐸᑦ ᐃᓕᔪᑎᑎᓂᒃ ᐅᒃᓯᒃ ᖃᓯᒪᑐᒃ ᑲᒥᓗᔪ

ᐳᓴᓕᐅᑎᒥᒃ ᐊᒪᓗᓂᑦ ᑕᑎᐅᒥᒃ ᓯᐅᕆᒥᓗᓂᑦ ᐊᑐᓗᑎᑦ ᑕᑯᐊ

ᑲᒥᑎᓯᔪᓐᑦ ᐅᐱᓕᔪᐸᑦ ᓯᐅᕆᒥᒃ ᐱᑕᒃᐃᓐᓴᐅᓴᓯᑦ ᐃᓗᒥ

ᐳᓯᒪᔨᓂᒃ ᑭᐊᓴᐅᑎᐅᐸᑦ ᐅᓕᑕᓂ.

If a small fire starts on top of the stove from grease splattering out of a pan, put fire out by sprinkling with baking soda, salt or sand. Fill a pail with sand during the summer and keep behind the stove.

ᐅᒃᓯᒥᒃ ᐃᓕᓗᑎᑦ ᐊᑐᑭᐱᑦ ᓯᒃᐃᐊᑦ ᓯᑎᐃᑐᓗᑎᑦ ᓂᑭᓂᒃ ᐃᓕᔪᑎᑲᓯᓗᑎᑦ

Place food slowly into hot fat.

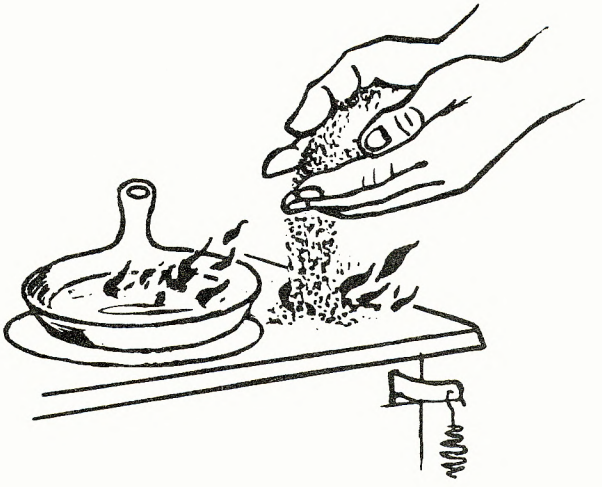

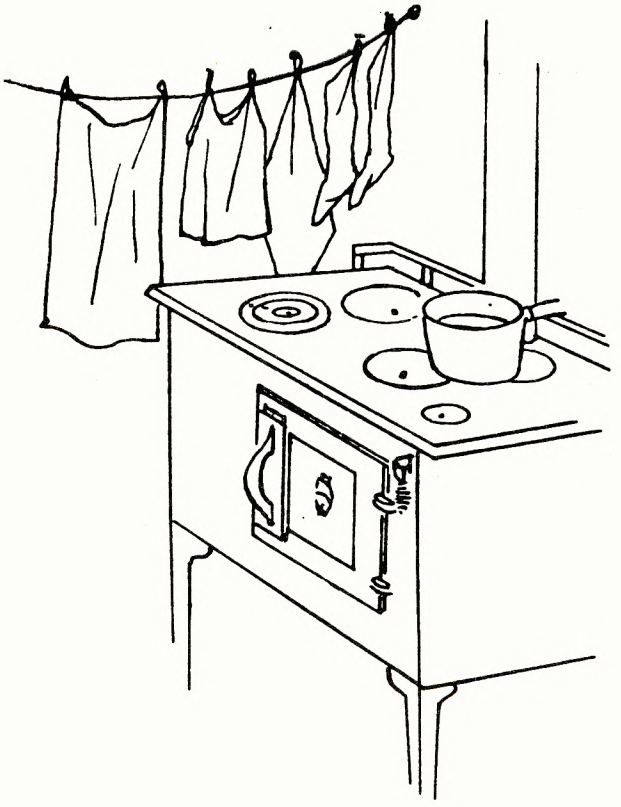

ᑭᐊᖏᐅᑎᐅᐸ ᐃᓕᒪ. ᑐᓴᐊᒃ ᐊᒪᓗ ᑐᓴᐊᒃ ᓴᓕᒥᑐᒃ ᐸᐅᒋᕐᔪᐸ-
ᓗᒋᑦ ᐃᑯᐊᓕᓂᐊᒋᒪᒡᑦ ᑐᓴᐊᑎᑦ.

Keep stove parts, pipes and chimney free of soot to prevent chimney fires.

ᐸᓄᕆᓂᒃ ᑲᒪᑕᐃᔨᐱᑦ ᐸᓂᓴᓄᑎᑦ ᑲᒪᑕᑭᓇᐃᓗᒋᑦ ᑭᐊᖏᐅᑎᐅᐸ
ᑯᓕᒪᓂ. ᑲᑕᔨᑎᑦ ᐅᒪᔪᒪᑕ ᐊᒪᓗ ᐃᑯᐊᓕᑎᓴᔨᓇᓄᑎᒃ.

Hang clothes to dry near heat but not over the stove in case they fall onto the stove and burn.

Safety in Using the Stove (continued)
ᑲᓂᓈᑦᑕᒃ ᓯᑯᓴᓂᓄᑦ ᑎᒃᓯᐊᓂᓄᑦ ᑭᐸᖏᑦ ᓴᓄᓴᐊᖏᑦᑐᓂ

Keep paper, rags, gasoline away from the stove.

ᓯᓇᐅᐃᓇᓄᒃ ᑭᐊᖏᑐᑎᒥ ᐃᑯᐊᓪᓕᓯᓪᓚᑦᑕᐃᓪᓂᐅᑎᑦ

Never try to burn anything in the stove.

ᑯᑦᓯᒍᐱᑦ ᓇᑎᒍᑦ ᐊᓪᓕᖏᐅᑎᓪᓚᕐᓂᒍ ᐸᓪᐅᑲᓄᐊᒥᒪᑦ

Wipe up spills on floor near the stove at once to prevent falls.

ᐱᐸᕆᐃᑦ ᐱᒍᐊᐅᖏᑦᓯᑦ ᐃᒪᐃᒥ ᑭᐊᖏᑐᑎᐅᐸ ᖏᓄᐊᓄ ᐱᒍᐊ-

ᑯᓂᑦ ᓯᓄᐃᒥᓂᓄᑦ ᐊᒪᓗ ᐳᓪᐃᒥᓂᓄᑦ.

Children should be encouraged to play in other parts of the room or in a bedroom, away from the stove.

ᓯᓇᑐᐃᓇᐃᑦ ᓇᑎᒥᑐᖅᑕᒥᑐᑦ ᓇᔪᑎᐅᒃᖃᒪᑕ

Keep floor free of anything you can trip over.

ᐃᑯᒪᐃᑦ ᒪᖅᓱᑦ ᖃᐱᐅᔾᒥᒃ ᐃᒃᓕᔪᔾᒥᓂᓚᑦ ᐊᒃᑐᑐᖅᐃᑦ

ᓇᓂ ᐱᐊᕿᐃᑦ ᑎᔪᔪᓇᓕᑕᒃᓂ.

Keep matches in a metal or glass container out of the reach of children.

ᐃᑯᐊᓕᒥᒃ ᑲᒥᓱᔪᑎᒃ

The Fire Extinguisher

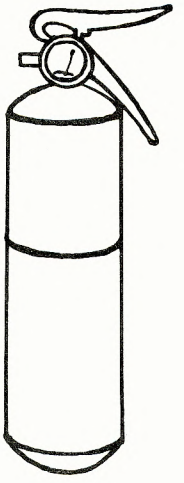

ᐃᔨᓕᑎᐅᒥᒃ ᐊᐱᑎᔨᑎᑦ ᑲᓂ ᐅᓇ ᐱᓕ ᔪᒪᒡᑦ ᓂᓕᐅᓇᓕᓕ ᐃᔨᑕᑲᐅᒧᑦ

Ask the Adult Educator about this even before you move into the new house.

ᓕᐳᓕᐸᒥ ᐳᓕᔨᑎᑦ ᐃᔨᑕᑲᐅᒥ ᕈᓂᔭᕆ ᐅᐊᑎᑦ ᐃᑯᐊᓕᒥ ᑲᒥᑎᓱᔪᑎᑦ ᓇᓂᒪᒡᑦ ᐱᒡᓂᑲᒃ ᓕᐳᓂ ᑲᒥᑎᓱᔪᑎᓕᒃ

On your first visit, look to see where it is kept. The 3-bedroom houses will have a fire extinguisher and may have two of them.

ᑲᐅᐳᑲᑎᑲᔨᔨᑎᑦ ᐃᓄᓕᑎᐅᒥᒃ ᑕᓇ ᐃᑯᐊᓕᒥᒃ ᑲᒥᑎᓕᔪᑎᒃ ᐊᑐᑭᐅᓕᒡᓕᑦ

Check with the Area Administrator in the settlement to make sure that the fire extinguisher is in good working condition.

ᐃᔨᓇᑎᒃ ᐃᓕᓕᒪᑦ ᑲᐅᐳᒪᔪᖏᐃᑦ ᓇᓂᒪᒡᑦ ᑕᓇ ᐃᑯᐊᓕᒥᒃ ᑲᒥᑎᔪᑎᑦ ᐊᒪᔨ ᑲᐅᐳᒪᔪᖏᐃᑦ ᑲᓇ ᐊᑐᑕᐅᓕᒡᓕᑦ ᐃᓄᓕᑎᐅᒃ ᐃᓕᓂᐊᑎᓕᓂᐊᑐᒃ ᑲᓇ ᐊᑐᑕᐅᓕᒡᓕᑦ.

Everyone in the family should know where the extinguisher is kept and how to use it. The Adult Educator or the Area Administrator will be able to show you how the fire extinguisher works.

ᑭᐊᖏᐅᑦ ᐊᒪᓗ ᐅᑯᖏᐅᑦ ᐊᑯᓂᐊᓗᑭᓇᑐᑦ

The Stove and Heater Will Last for a Long Time

ᐃᑯᒪᐱᒪᑕ ᓯᓪᐱᐊᐊ ᐃᓗᐊᒪᓗ ᓂᑭᓪᐅᓗᓂ ᑭᐊᖏᓗᐊᓪᓕᑐᓂ ᐃᑯ-
ᒪᑯᑐᓗᓂ ᑭᐊᖏᐅ ᓯᕿᔪᓇᐳᑦ ᑕᒪᓇ ᑭᐊᖏᐅᑎᐅᑦ ᑲᒪ ᐅᓇᓂᒧᑦ
ᐊᐅᑐ ᐃᓇᑎᐊᑲᒪᑦ.

The firebox lining, fire pots, grates and cooking top parts can be destroyed by too much continuous high heat. The iron breaks down and will burn.

ᑕᒪᑯᐊ ᐃᓪᓕᑦ ᓯᓇᑯᑕᑦ ᑲᒪᒋᔪᐊᓗᒋᑦ ᐊᑯᓂᑭᓇᑐᑦ ᐃᑯᒪᐱ-
ᒪᓪ ᐱᔪᐊᑲᑕᓂᐅᐳᑲ ᓇᒪᑐᒥ.

These parts will last for years if cared for. The burners will work best between certain low and high settings. Set heat control between 2 and 4 most of the time.

ᑭᐊᖏᐅᑦ ᐅᑯᖏᐅᓗ ᑲᒥᓯᓇᒪᑦ ᐃᒥᓂ ᐃᑰᒪᑭᓗᓂᑭᑐᓂ ᑕᓇ
ᐅᑲᖏᒋᔪᒪᒋᓗᐊᐸᑦ. ᐱᑕᑲᑎᐳᑲ ᑭᓪᒥ ᐱᓫᓇᐅᒥᑲ ᐅᑲᖏᒋᐊ-
ᑐᑎᓂᓂ ᐊᐅᑎᐊᑲᐸᑦ ᐅᑲᖏᒋᐊᑎᐊᑲᑎᓗᒍ.

The stove and heater have a constant level valve that will shut the burner off automatically if the heat control is turned too low. There is also an automatic stop control for the highest setting.

ᑎᑎᒃ ᐃᓕ

NOTES