SADDLE LAKE I.R. NO. 125

VILLAGE PHYSICAL DEVELOPMENT PLAN

LIBRARY
DEPT. OF INDIAN AFFAIRS
AND NORTHERN DEVELOPMENT
MAY 18 1983
MINISTÈRE DES AFFAIRES INDIENNES
ET DU NORD CANADIEN
BIBLIOTHÈQUE

SADDLE LAKE I.R. NO. 125

VILLAGE PHYSICAL DEVELOPMENT PLAN

Indian and Northern Affairs Canada | Affaires indiennes et du Nord Canada

LIBRARY | BIBLIOTHÈQUE

This book is due back one month from date of loan. | Renvoyer d'ici un mois à compter de la date d'emprunt.

E78.A34
B88

IAND 20-54 (1/79)

PREPARED FOR
DEPARTMENT OF
INDIAN AND NORTHERN AFFAIRS

BY
BUTLER KREBES ASSOCIATES LTD

FEBRUARY, 1980

BUTLER · KREBES · ASSOCIATES · LTD.

LANDSCAPE ARCHITECTS • MUNICIPAL ENGINEERS • SITE PLANNERS

10455-84 Avenue
Edmonton, Alberta
T6E 2H3

Telephone (403) 433-3184

P. R. Butler
B.Sc. L.A.
C.S.L.A.
A.S.L.A.

J. S. Krebes
B.Sc. P. Eng.

J. K. To
B.L.A.
M.L.A.
C.S.L.A.

C. P. Sorensen
C.E.T.

F. J. Moruzzi

March 17, 1980

Department of Indian Affairs
& Northern Development,
3rd Floor, 9942 - 108 Street,
Edmonton, Alberta.

Attention: Mr. Peter Hecht, Physical Planner

Reference: Village Physical Development Plan:
Saddle Lake Reserve No. 125

Dear Sir:

We are pleased to submit the Village Physical Development Concept for the Saddle Lake Reserve No. 125.

This report documents our findings and the planning process used to take creative advantage of opportunities as well as problems in the study area. In addition, we present techniques for site development which respond to critical microclimatic conditions; and techniques for coordinating site and architectural design to create a more attractive and livable housing environment. A synopsis of the soils report prepared by Pedology Consultants is appendixed.

We would like to acknowledge the direction provided by Chief Steinhauer, the Band Council and staff members of the Tribal Administration during the study.

We believe the concept will provide practical and sensitive guidlines for logical development of the village. Thank you for the opportunity to participate in the preparation of this study.

Yours truly,

BUTLER KREBES ASSOCIATES LTD.

Patrick R. Butler, C.S.L.A.

PRB/ag

Attachments

CONTENTS

COVER PAGE
COVER LETTER
CONTENTS
ILLUSTRATIONS

	Page
1. ABSTRACT	1
2. INTRODUCTION	
Background	2
Study Objective	2
Study Area	2
Planning Process	3
3. PROGRAM DEVELOPMENT	
Existing Use	4
Program Recommendations	7
4. LAND SUITABILITY ANALYSIS	
Introduction	10
Terrain Analysis	10
Vegetative Cover	11
Microclimatic Factors	11
Development Potential	12
5. VILLAGE DEVELOPMENT CONCEPT	
Land Use Diagram	13
Servicing Considerations	14
Housing Types	15
Village Development Concept	16
Implementation & Phasing	17
Energy Conservation	17
Site & Architectural Considerations	23
Conclusion	24
6. APPENDIX: SYNOPSIS OF SOIL SURVEY REPORT	
Introduction	25
Classification & Interpretations	25
Conclusion	28
7. BIBLIOGRAPHY	29

ILLUSTRATIONS

1. Regional Location
2. Study Area
3. Existing Use Patterns
4. Terrain Analysis
5. Vegetative Cover
6. Microclimate
7. Winter Months Wind Direction & Frequency
8. Development Potential
9. Land Use Diagram
10. Sewage Lagoon Suitability
11. Housing Types
12. Application of Housing Types
13. Village Development Concept
14. Development Phasing
15. Site Planning Techniques
16. Capability for Agriculture
17. Source of Road Subgrade Material

Map Pockets:

- Detailed Soil Map
- Soil Limitations for On-site Sewage Disposal
- Agriculture Capability
- Village Development Concept

I. ABSTRACT

This study encompasses 445 hectares (1,100 acres) in and around the village of Saddle Lake within Saddle Lake Reserve #125, located 209 kilometres (130 miles) northeast of Edmonton, Alberta. The objective of the study is to provide the Band and the Department of Indian Affairs with a guide for future village land use decisions in the form of a Village Development Concept.

Pertinent background material and existing land use patterns were reviewed and the future needs and development plans of the Band identified. From these, program requirements for the Village Development Concept were formulated.

In the next stage of the study, the suitability of the land for development was analyzed under three criteria: terrain, vegetation and microclimate. The findings were combined to arrive at a composite development potential rating. Land areas were ranked from most suitable to unsuitable for development.

The program recommendations, existing use patterns and development suitability of the land were then synthesized to produce a land use diagram. After determining a housing type acceptable to the Band and servicing feasibility, the Village Development Concept was developed, defining Community Use Lots, road and utility corridors, Conservation Zones and layouts for 247 new housing units. Finally, recommendations for implementation and phasing of the Concept are presented.

The appendix to the study contains a synopsis of the Soil Survey Report prepared by Pedology Consultants, and recommendations for maximizing energy conservation through site development, and a discussion on site and architectural coordination.

2. INTRODUCTION

BACKGROUND

Saddle Lake Indian Reserve consists of some 28,500 hectares (68,685 acres) in northeastern Alberta. The reserve is approximately 209 kilometres (130 miles) northeast of Edmonton, and 25 kilometres (16 miles) west of St. Paul, the nearest major town (Map 1). The village is approximately 5 kilometres (3 miles) south of Saddle Lake. In 1977-1978 a development master plan study covering the entire reserve was completed for the Band by Douglas J. Cardinal Architect Ltd. The scope of work covered socio-economic and physical planning to 2002 A.D. The report documents have been received as information by the Band Council. Statistics used throughout the report have been those expressed in the Cardinal report.

The present study was undertaken by Butler Krebes Associates Ltd. as part of a program of village development studies initiated by the Department of Indian Affairs. This study encompasses 445 ha around the village. About one-third of the study area has been cleared for agriculture and building use. The remainder consists of patches of grassland and aspen poplar groves. About 70 residences are in the study area.

STUDY OBJECTIVE

The objective of this study is to provide the Band and the Department with a guide for future village development. To this end the Village Development Concept plan must integrate the expressed needs and aspirations of the Band, the opportunities and constraints of the land, and the engineering feasibility of utility systems under consideration by the Department. The intent is to provide a Physical Development Plan which serves as a guideline for future planning decisions. Periodic updating of the plan in response to changing circumstances will require a review of the development capabilities based on biophysical characteristics, presented in this report.

STUDY AREA

The study area comprises 445 hectares (1,100 acres) within Sections 26, 27, 34 and 35, Township 57, Range 12 W4th. Highway 652 forms the north boundary and Saddlelake Creek the east boundary. Refer to Figure 2, Study Area, for location of the study area within the reserve.

PLANNING PROCESS

The study was conducted in four phases:

- **PHASE I - Data collection, research and site visits**

- review of pertinent background materials to obtain a regional and local perspective of the study area.

- meetings with Band members and groups to determine Band needs and to formulate program requirements for village development.

- site visits to verify existing vegetation and use patterns, and to conduct a soil survey for engineering and agriculture performance evaluations.

- analysis of climatic data.

- **PHASE II - Evaluation of development potential**

- recording of major physical factors affecting development on map overlays to form data base. Each factor is rated excellent to poor.

- composite analysis of map overlays to identify areas with a similar degree of opportunities or constraints for development.

- **PHASE III - Village land use plan**

- synthesis of identified program requirements, existing use patterns, development potential and servicing feasibility to arrive at a land use diagram.

- delineation of transportation and utility corridors.

- **PHASE IV - Village development concept**

- formulation of housing types and mixes.
- consultation with the Band in determining housing option
- designation of specific land areas for uses recommended in the land use plan, configuration of new housing units, delineation of roads and utility easements.
- recommendations for implementation and phasing.
- recommendations for energy conservation in site planning and building design.
- recommendations for site and architectural design coordination.

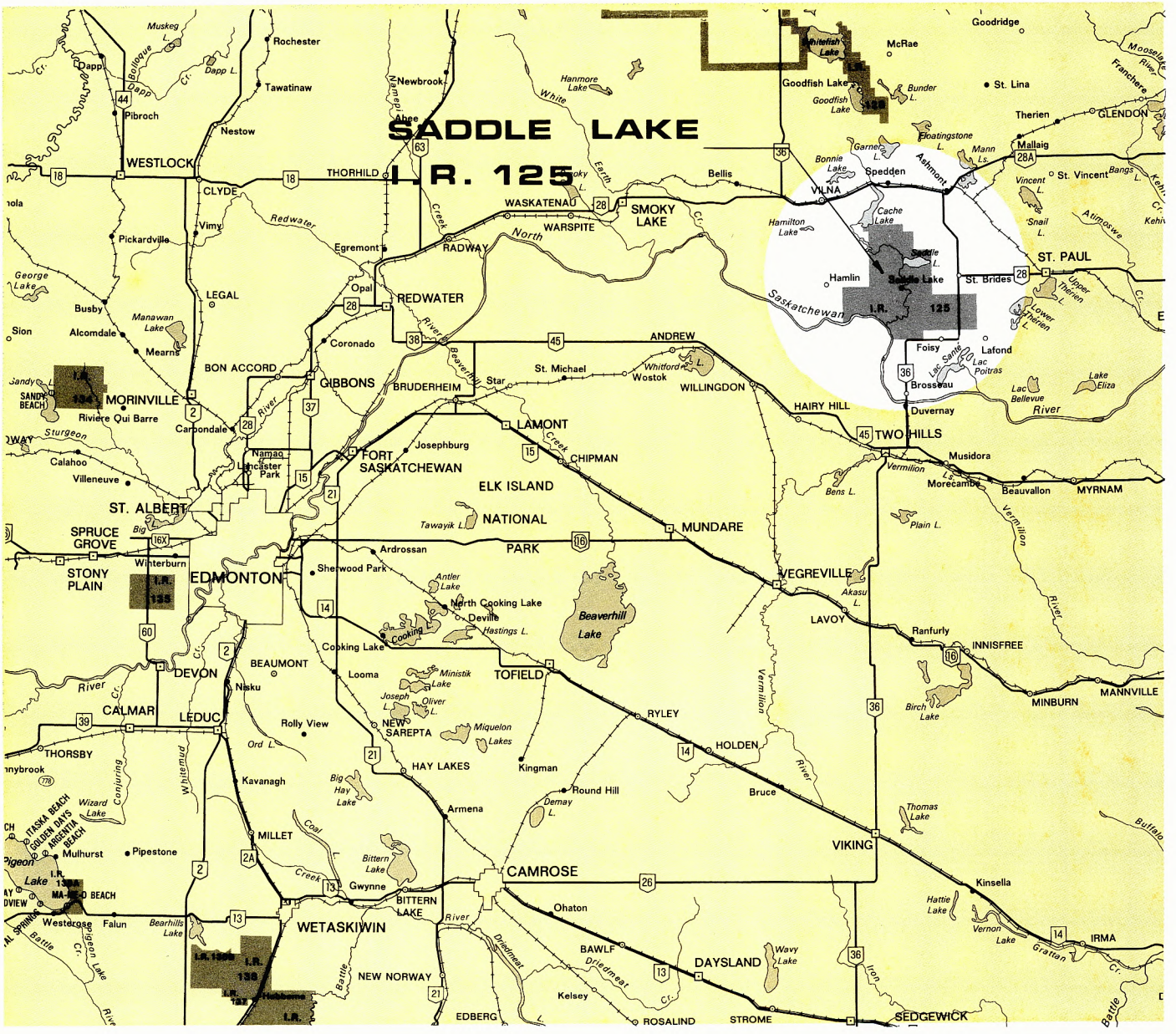

FIGURE 1. REGIONAL LOCATION

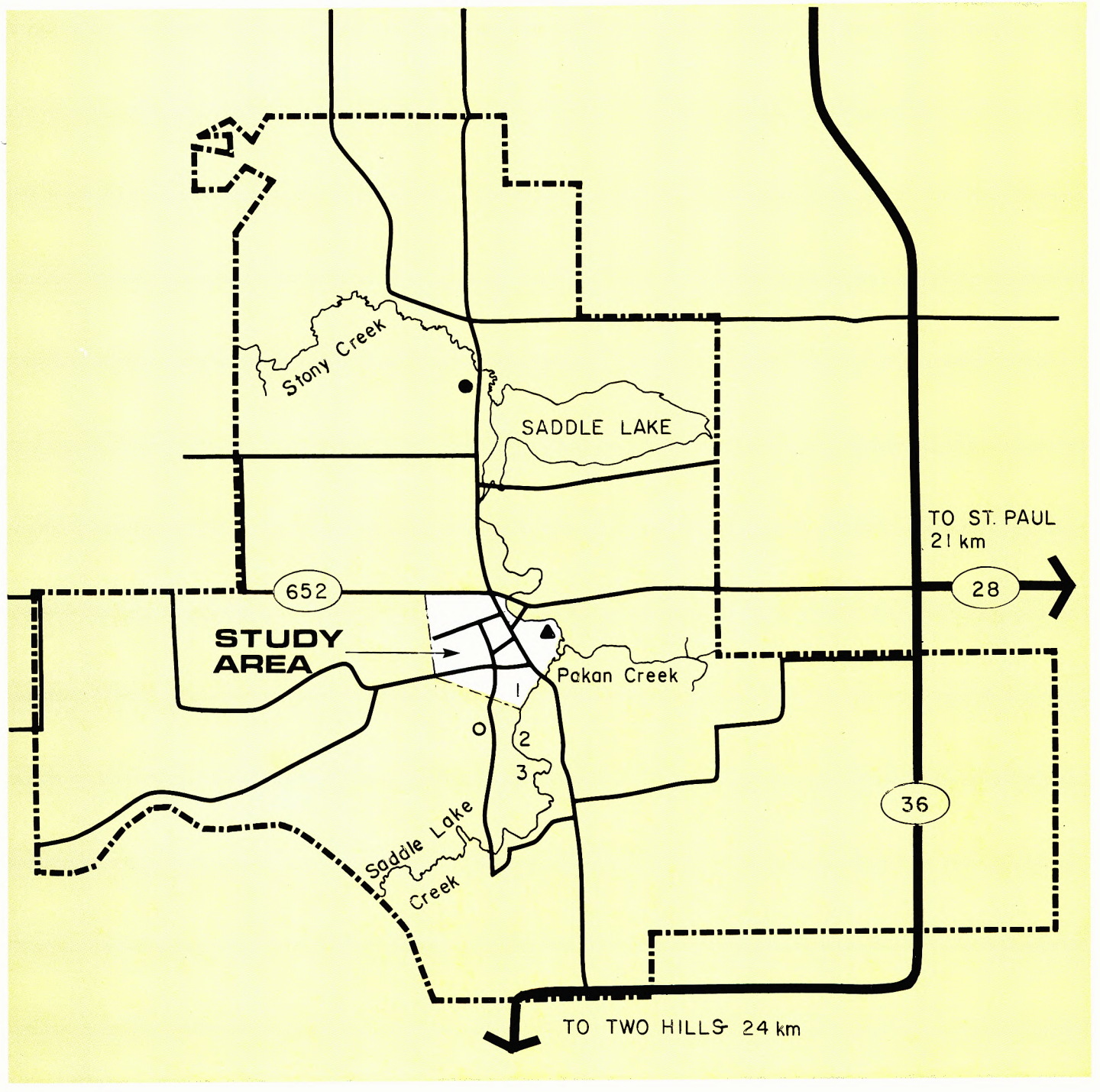

LEGEND

- PAVED ROADS
- GRAVEL ROADS
- RESERVE BOUNDARY
- ▲ EXISTING SEWAGE LAGOON
- ● EXISTING SANITARY LANDFILL
- o PROPOSED SANITARY LANDFILL
- 1, 2, 3 PROPOSED SEWAGE LAGOON SITE NUMBER

NORTH

km 0 1 2 3 4 5

FIGURE 2. STUDY AREA

3. PROGRAM DEVELOPMENT

EXISTING USE

Map 3, Existing Use Patterns, shows present use and perception of the study area. Major community facilities are along a 0.7 kilometre (half mile) stretch of the main north-south road. These include the band hall and sports grounds, office complex, arena, school, church and a housing pre-fabrication plant. The church and band hall date from the 1950's. Visually, the church is the dominant feature. The arena-office complex and school form the dominant community focal point. Residences are for the most part dispersed. Major roads follow a grid pattern. About a third of the study area is used for forage and grain production. Further discussions of each land use component follow below. Although Saddlelake Creek forms the eastern boundary of the Study area, it is not visible from most of the village.

● HOUSING

Presently there are about 70 houses in the study area. Except for the new units in the townsite subdivision, most require some repairs, and three units are dilapidated. The grid layout of the townsite is contrary to local lifestyle. As a result, front entrances are ignored in favour of unplanned lane access to back entrances. Band members have expressed dissatisfaction with this form of housing and requested that new houses be in clusters, units to be spaced 60 metres (200 ft.) apart and parking access to be at the rear of units. Multiple housing such as apartments are suggested for location immediately south of the church. Existing houses on the site will have to be removed. The Band would like to expand the trailer court south of the school to add eight more units to the west. Edmonton architect N.W. Stroich has been commissioned to design the elders lodge on a site immediately northwest of the townsite subdivision, preferrably on high ground. Good pedestrian connection between the lodge and town center is desired.

The Band feels the existing housing situation on the reserve is poor and inadequate. The Self-Help Housing and Renovation Proposal of 1978, if continued as an on-going program, can provide training and employment as well as improve social conditions and housing standards. The 1977 on-reserve population of 1644 persons is projected to increase to 3595 by 2002 A.D. Based on the 1977 housing shortfall estimate of 224 homes and the number required as a result of population increase, a total of 541 homes will be required by 1982. An average of 131 new homes is estimated to be required for each five-year period to 2002 A.D.

It was not within the scope of this study to plan for the total projected housing need of the reserve. For our purposes, areas most suitable for housing development have been identified and the optimum layout based on Band lifestyle, functional and servicing feasibility has been recommended. There is some interest in the concept of "private ownership" whereby lot boundaries can be established. Due to the communal status of the land, such boundaries can not be legally registered. However there are other methods of accomplishing this and it was agreed that the Band Council will deal with the issue as it arises in future.

● COMMUNITY FACILITIES

The office-arena complex was designed to supply basic needs and employment on the Reserve. It houses a grocery store, laundromat, cafe, pool room, health center and credit union on the main floor and a museum and administration offices on the second floor. A warehouse is needed for the complex and a lean-to structure adjacent to the arena has been considered. The garage in front of the office was suggested for conversion to a fire hall and police station.

The band hall requires an expansion equal to the existing building. Water and sewer services and a full basement for storage should be considered. Two buildings at the former school site can be converted to a day care center and counselling services center. Relocation of the Arts and Crafts Building behind the church to the school or arena site was suggested.

Despite the completion of the new school addition in 1979, educational facilities on the reserve still fall short of DIAND and Alberta Education requirements. The Band also expressed a desire for a reserve-based vocational-technical high school. An increased demand in school facilities can be expected as enrollment and the scope of curriculum increase.

● RECREATION

Recreation facilities within the study area include a horse track (presently under reconstruction) south of the band hall, a pool room, an arena at the complex and a playground at the former school. The areas along Saddlelake Creek have not been extensively used for recreation but present good potential. The recreation area at the east end of Saddle Lake is used locally and by tourists. Additional facilities are needed for outdoor recreation during the summer months.

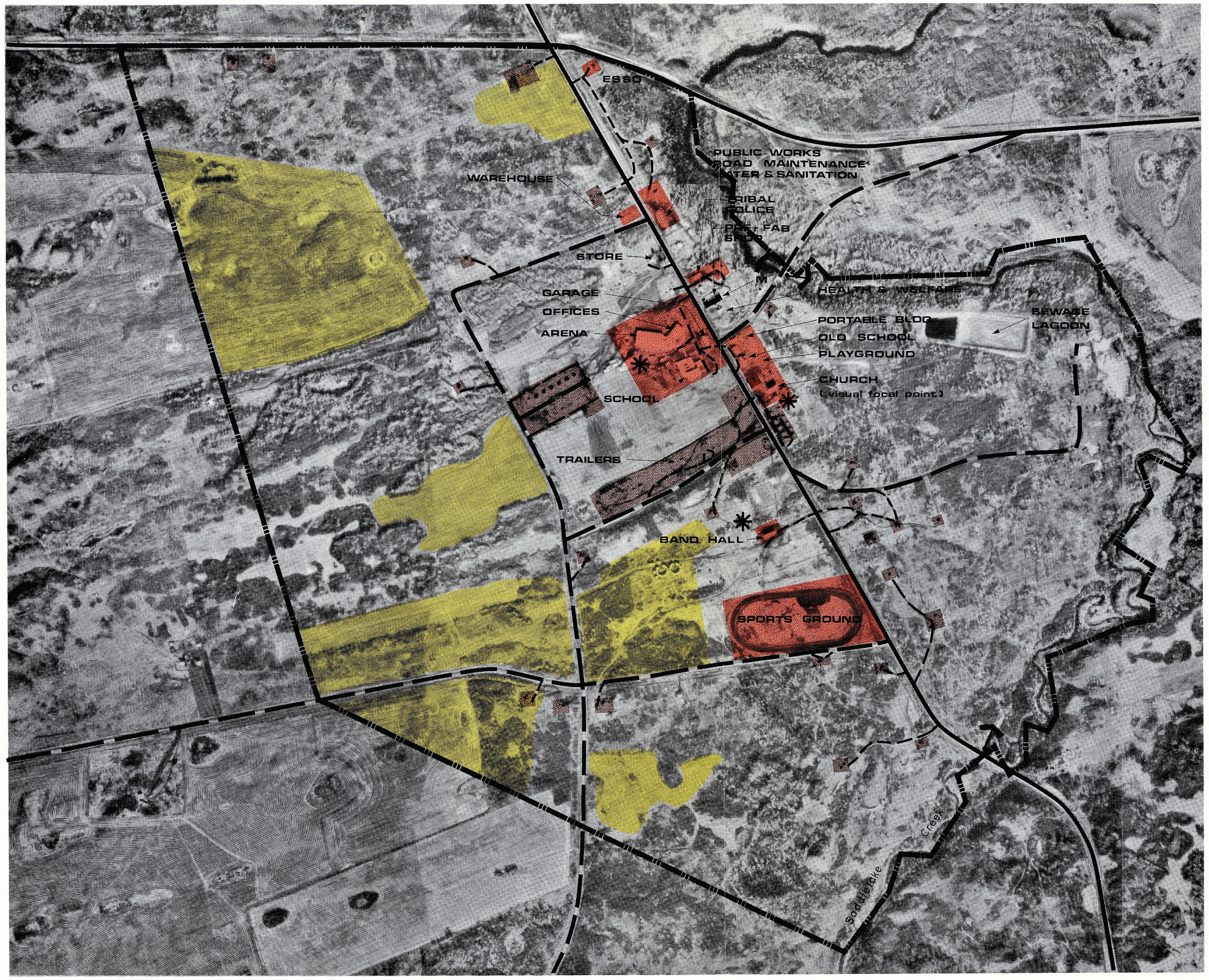

3. EXISTING USE PATTERNS

- MAJOR ROADS
- MINOR ROADS
- OTHER TRACKS / PATHS
- COMMUNITY FOCAL POINT
- CREEK VIEW
- AGRICULTURE
- COMMUNITY SERVICES (ADMINISTRATION, EDUCATION, SERVICES, RETAIL & RECREATION)
- M MANUFACTURING
- RESIDENTIAL

SADDLE LAKE I.R. NO. 125

VILLAGE PHYSICAL DEVELOPMENT PLAN

0 50 100 200 300m

SCALE 1:5000

NORTH

BUTLER KREBES ASSOCIATES LTD

Plans for expansion at the band hall recreation grounds include a 1000 metre track, rodeo grounds, ball diamonds, soccer/football field, playground, picnic area, campground and parking lot. Schoolground development proposed by the Band comprises two tennis courts (to be used as a pleasure skating rink in winter), a 400 metre track, football/soccer field, ball diamonds and playground. The schoolground is intended to be the major recreation area in the village while the grounds at the band hall will act as a supplementary area. In addition, within residential areas, a 20 square metre tot lot per 100 homes has been suggested. Tot lots should be in treed areas, linked to housing clusters by walkways so that they are accessible to young children.

● COMMERCIAL

Other than retail and service stores in the office complex, there is only one gas station. This is located at the north end of the study area. There is also a store immediately north of the complex. This store is presently closed and its future is undecided. The development of retail business at the complex has improved employment opportunities on the reserve, with the result that about 60% of on-reserve employment is in the retail and services sector. As the Band continues to strive for self-sufficiency, an expansion in retail and services activity can be expected.

● MANUFACTURING

Manufacturing is the weakest sector in the reserve economy. The housing prefabrication plant is the only such venture. The Band is interested in expansion of the plant as well as the creation of light industry between the main road and the Creek following the existing land use pattern. Expansion of construction and manufacturing industries could contribute to the strength of the local economy.

● AGRICULTURE

Farming constitutes 20% of total on-reserve employment. There is potential for expansion of agricultural production on the reserve. Within the study area, approximately 91 hectares (225 acres) has been cleared and used for forage and grain production. Expansion in the area may be limited by terrain factors, other competing uses, capital and infrastructure constraints.

● UTILITIES AND ROADS

An existing sewage lagoon is located 700 metres (2,300 ft.) east of the office-arena complex. The village sewage system consists of a 200 millimetre (8 in.) main collector extending from the lagoon to the school, office-arena and townsite subdivision. The lagoon consists of two cells of which only one is functioning. The holding pond has not been filled and seepage from either the liner and/or the lagoon berms is suspected. Seepage from the lagoon berms poses a distinct danger of creek and ground water pollution. Allowing for a 300 metre (1000 ft.) restriction around the lagoon, 22.5 hectares (55.5 acres) will be required to the south and west of the lagoon to accomodate future requirements. Since the existing lagoon is located within a 1.6 kilometre (1 mile) radius of the village center, its relocation would greatly facilitate development east of the main road. For this reason the Band prefers the relocation of the lagoon south of the study area and plans to provide or upgrade services to all major community facilities in the village. Three sites were proposed in a municipal services study prepared by this office in 1978 (see Figure 2, Study Area).

The existing water supply system is inadequate for the potable and fire flow needs of the village. Proposals to upgrade the system are under consideration by the band. The existing sanitary landfill site is 4.8 kilometres (3 miles) north of the study boundary. A second site approximately 1 kilometre (0.6 mile) south of the study area was proposed by the same municipal services study. Highway 652 and the main road are fair quality, oiled gravel. Other roads are gravelled or trail type access to homes and farms. The Band would like to replace the present random parking areas and vehicle paths with defined parking lots and access roads.

PROGRAM RECOMMENDATIONS

From the foregoing discussions, several concerns become apparent. These include: (a) additional housing responsive to Band lifestyle; (b) expansion of community scale recreation; (c) development of neighbourhood play areas; (d) maintenance and expansion of the existing commercial/manufacturing area along the main road; (e) upgrading of utilities and roads; (f) conservation of existing agricultural land; (g) future expansion. In more detail, the program elements recommended for the village development plan are expanded below:

- HOUSING

Single Family Housing

- cluster housing at 60 metres (200 ft.) spacing.
- lane access at rear.
- integration of habitable existing homes into new housing plan.
- expansion of trailer court westward to add 8 units.
- selective tree clearing where necessary.

Multiple Housing

- location to be sourth of church.
- cluster layout.
- rear access and parking.

Elders Lodge

- central location.
- on higher ground.
- good pedestrian connection to the town centre.

- COMMUNITY & RECREATION FACILITIES

- expansion of major facilities at band hall, school and office complex.
- provision of summer outdoor recreation facilities.
- provision of neighbourhood play area in residential areas at a ratio of 1 tot lot (20 square metres) per 100 homes.
- converstion of former school buildings to day care centre and counselling services center.
- conversion of garage to police station and fire hall.
- relocation of Arts and Crafts Building to schoolground or arena site.
- provision of warehouse for office-arena complex.
- identification of natural areas for preservation and passive recreation.

- COMMERCIAL & MANUFACTURING

- identification of an area adjacent to existing site for expansion.

- AGRICULTURE

- identification of best rated agricultural land for expansion of farming in study area.

- **UTILITIES AND ROADS**

  - well defined roads and parking areas.
  - relocation of sewage lagoon to a site south of the study area.
  - provision of utilities to the band hall.
  - identification of road and utility corridors.

4. LAND SUITABILITY ANALYSIS

INTRODUCTION

The intent of this section is to evaluate the characteristics of the land in terms of suitability for development. Three factors are significant in the land suitability analysis: (a) terrain characteristics, (b) density of vegetative cover, (c) microclimatic factors. Opportunities and constraints to development imposed by each of these factors are shown in degrees of suitability on Maps 4, 5, and 6. Areas rated 'most suitable' are represented by the lightest tone. Decreasing suitability is shown in darker tones. By combining the analyses, degrees of suitability for development relative to all three factors can be identified. The result of this is shown on Map 7, Development Potential, which presents a composite rating of suitability for development.

TERRAIN ANALYSIS

The suitability of slope and soil conditions for engineering use was evaluated specifically as related to on-site sewage disposal and building construction. The results are depicted on Map 4, Terrain Analysis.

The most suitable areas are well to moderately-well drained loamy soils of the Ponoka Series occuring on slopes of less than 5%. It is assumed that this slope category will sustain the most intensive use and have the lowest construction and maintenance costs. Much of the existing village development along the main road lies within this zone. The greater portion of the study area has a few limitations to development due to increased slopes and soil conditions which restrict on-site sewage disposal. The lands adjacent to the Saddlelake Creek are unsuitable for development because of excessive slopes (over 15%), periodic flooding, high water table and the possibility of soil erosion and stream sedimentation should the native vegetation be disturbed. Other isolated areas of poorly drained clay loam soils on moderately rolling terrain (9 - 15% slopes) throughout the west and south of the study area were also rated unsuitable for development.

Detailed description of soil types and discussion of soil ratings for selected uses are presented in a report prepared for this study by Pedology Consultants, 1979. A synopsis of this report can be found in the Appendix.

VEGETATIVE COVER

Aspen poplar is the dominant tree species on high ground. Balsam poplar, spruce and willow are found in low lying areas and depressions. Native grasses occur throughout the study area.

Limitations to development imposed by density of vegetative cover is outlined on Map 5, Vegetative Cover. The rating system was based on the assumption that there is a proportional relationship between density and clearing costs. Open or cleared areas present no limitation while dense cover presents moderate limitations. The dominant vegetation on steep slopes, such as the spruce stands along Saddlelake Creek, imposes the greatest restriction to development due to its relative uniqueness and prevention of soil erosion.

MICROCLIMATIC FACTORS

Microclimatic factors are directly related to energy conservation considerations and are a significant input in development decisions, particularly in northern regions. Three factors determine the composite rating on Map 6, Microclimate: solar orientation, winter wind exposure, and cold air accumulation.

Areas which have south-facing slopes or are sheltered by existing vegetation, are identified as advantageous for development. Slopes facing northeast to northwest are cold slopes and have been assigned a moderate limitation to development. Other slope orientations or relatively flat areas with no solar advantage are assigned a slight limitation. As indicated in Figure 7, winter winds at Vermilion, Alberta (85 kilometres or 53 miles south-west) are predominantly from the west to northwest and south to southeast. Slopes exposed to these orientations are considered to have moderate limitations. Low lying areas where cold air accumulates have been assigned a moderate limitation.

4. TERRAIN ANALYSIS

- SUITABLE, SLIGHT LIMITATION FOR BLDG. SITES & ON-SITE SEWAGE DISPOSAL: WELL TO MODERATELY WELL DRAINED LOAMY SOILS, LESS THAN 5% SLOPES, WATER TABLE AT GREATER THAN 1.5 m
- MODERATELY SUITABLE DUE TO SLIGHT TO MODERATE LIMITATION FOR BLDG. SITES & MODERATE LIMITATION FOR ON-SITE SEWAGE DISPOSAL:
  a) RAPIDLY DRAINED SAND & GRAVEL SOILS, 2-9% SLOPES, WATER TABLE AT GREATER THAN 2.0 m
  b) WELL TO MODERATELY WELL DRAINED CLAY LOAM SOILS, 2-9% SLOPES, WATER TABLE AT GREATER THAN 2.0 m
- MARGINALLY SUITABLE DUE TO MODERATE LIMITATION FOR BLDG. SITES & ON-SITE SEWAGE DISPOSAL: WELL TO MODERATELY WELL DRAINED CLAY LOAM SOILS, 9-15% SLOPES, WATER TABLE AT GREATER THAN 2.0 m
- UNSUITABLE DUE TO SEVERE LIMITATION FOR BLDG. SITES & ON-SITE SEWAGE DISPOSAL: DUE TO ANY/COMBINATION OF THE FOLLOWING CONDITIONS: POOR DRAINAGE, FLUCTUATING/SEASONALLY HIGH WATER TABLE, FLOODING, EXCESSIVE SLOPES (OVER 15%)

SADDLE LAKE I.R. NO. 125

VILLAGE PHYSICAL DEVELOPMENT PLAN

0 50 100 200 300m

SCALE 1:5000

NORTH

BUTLER KREBES ASSOCIATES LTD

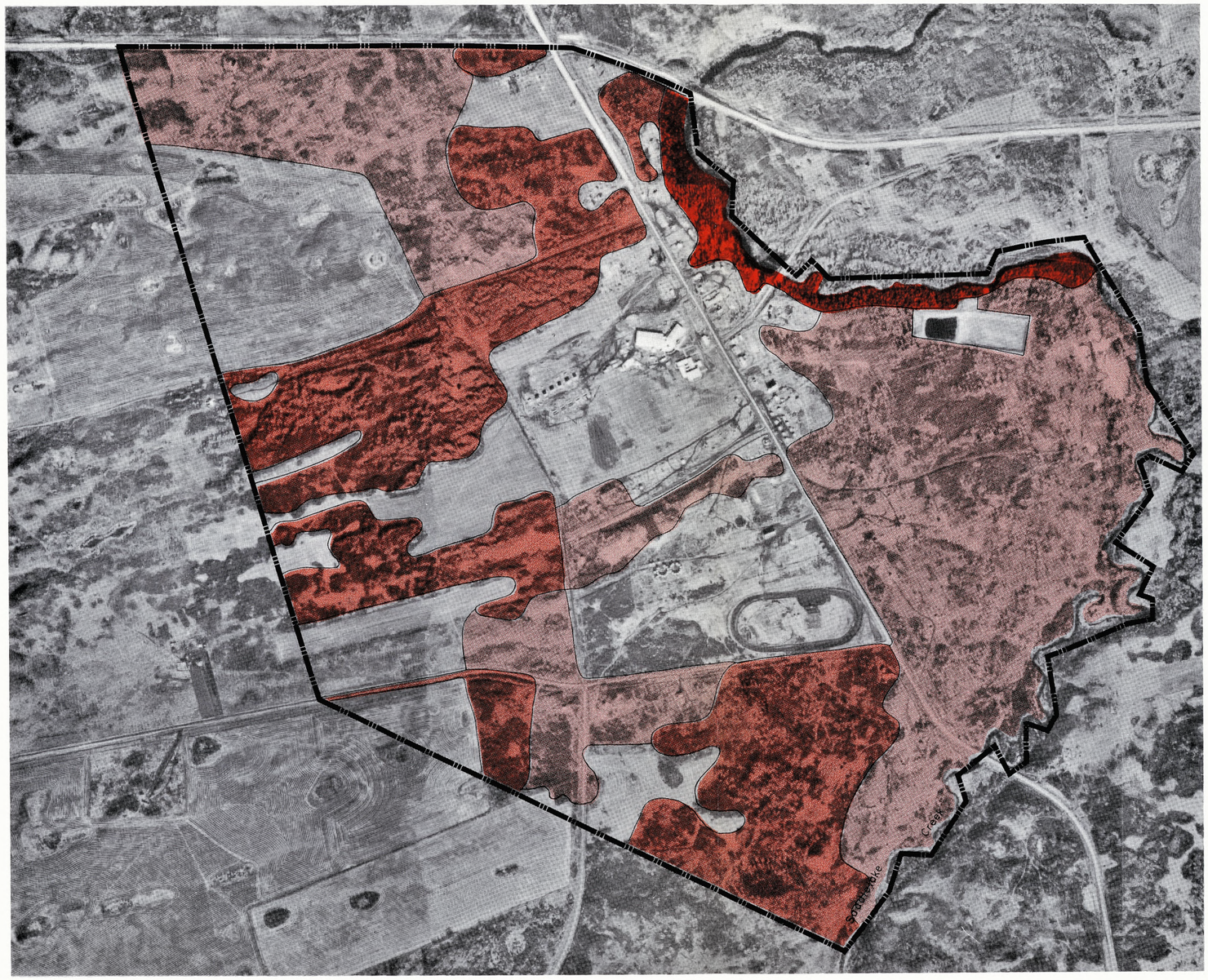

5. VEGETATIVE COVER

- OPEN OR CLEARED AREAS
- SPARSE TREE COVER & GRASS UNDERSTORY
- MEDIUM TO DENSE TREE COVER, SHRUB & GRASS UNDERSTORY
- UNIQUE DOMINANT VEGETATION (eg. SPRUCE) OR SUSCEPTIBLE TO SOIL EROSION IF EXISTING VEGETATION DISTURBED

SADDLE LAKE I.R. NO. 125

VILLAGE PHYSICAL DEVELOPMENT PLAN

0 50 100 200 300m

SCALE 1: 5000

NORTH

SUTLER KREBES ASSOCIATES LTD

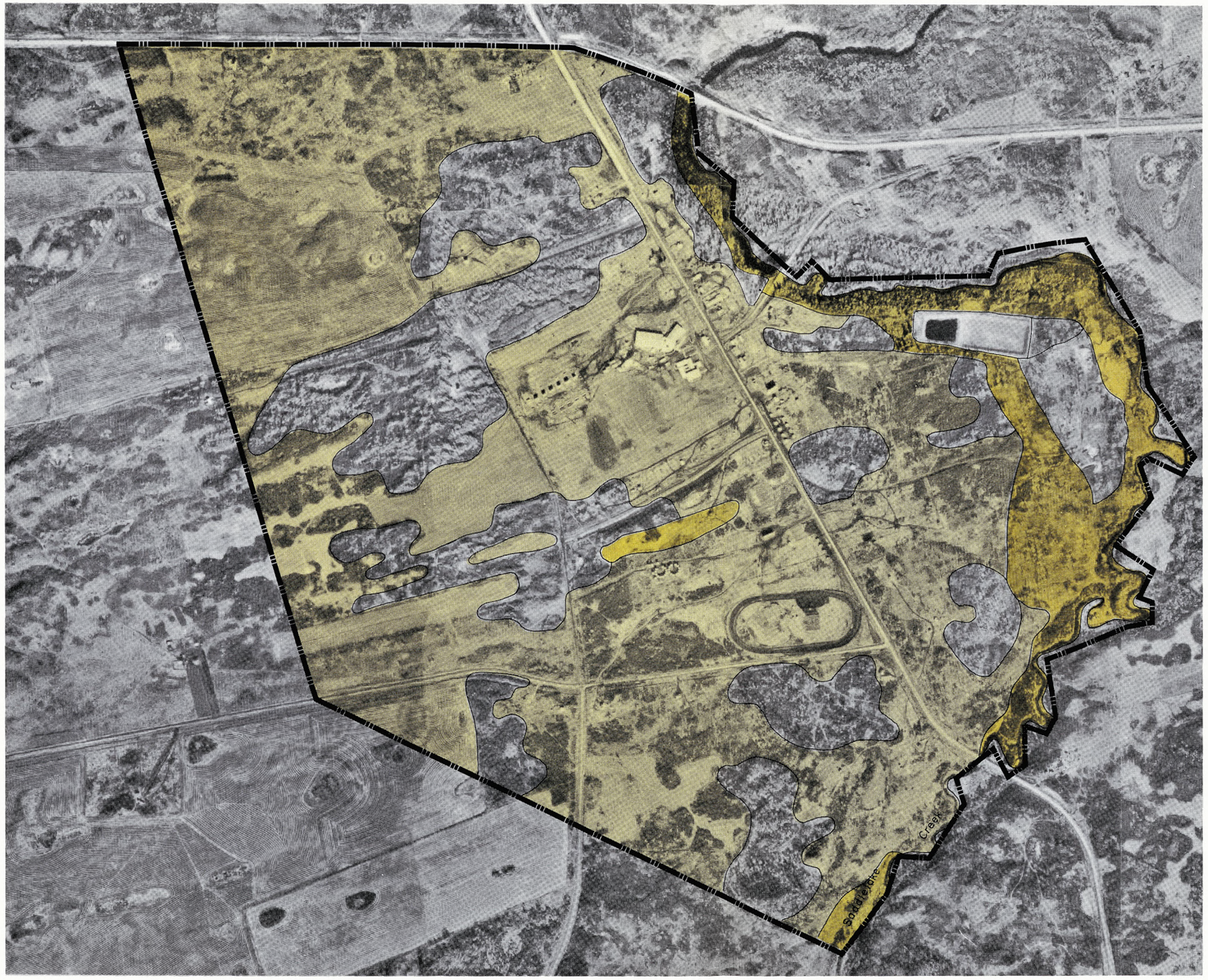

6. MICROCLIMATE

SHELTERED &/OR SOUTH FACING AREAS

SLIGHT LIMITATION: NO SOLAR ADVANTAGE

MODERATE LIMITATION DUE TO ANY OF FOLLOWING:
NORTHEAST TO NORTHWEST- FACING SLOPES,
EXPOSED TO W, NW, S & SE WINTER WINDS

SADDLE LAKE I.R. NO. 125

VILLAGE PHYSICAL DEVELOPMENT PLAN

0 50 100 200 300m
SCALE 1:5000

NORTH

BUTLER KREBES ASSOCIATES LTD

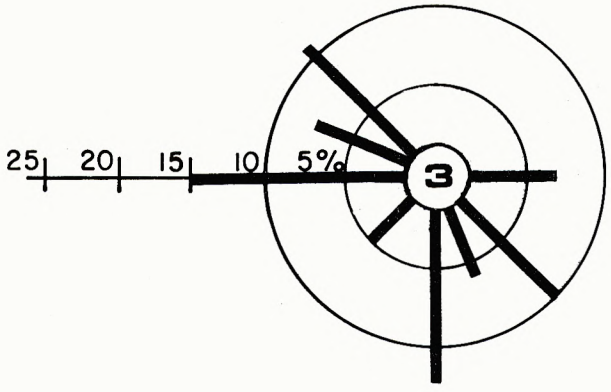

NOVEMBER

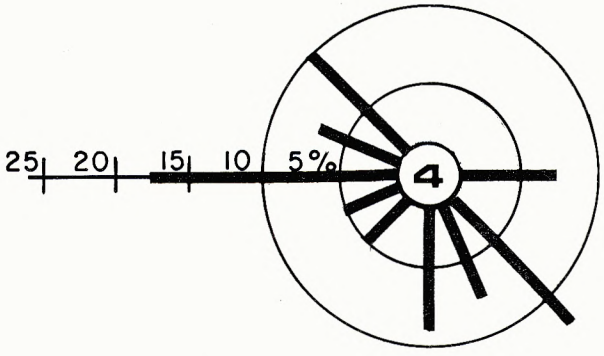

DECEMBER

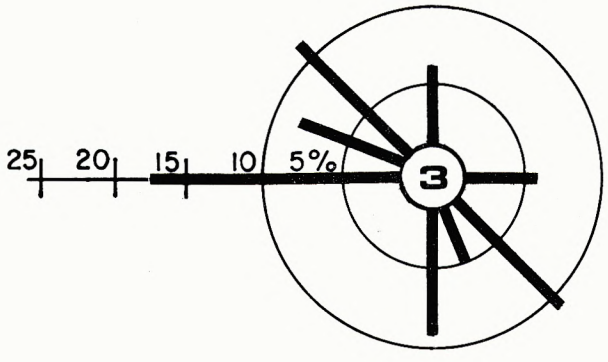

JANUARY

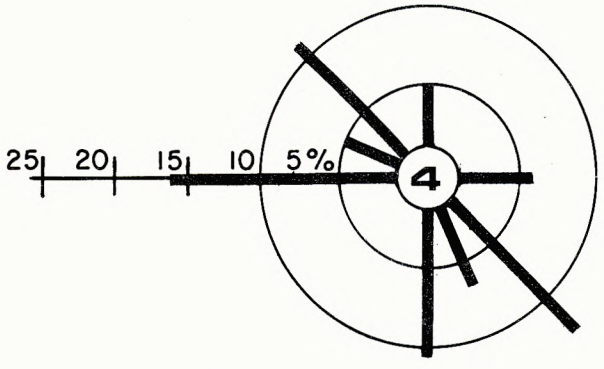

FEBRUARY

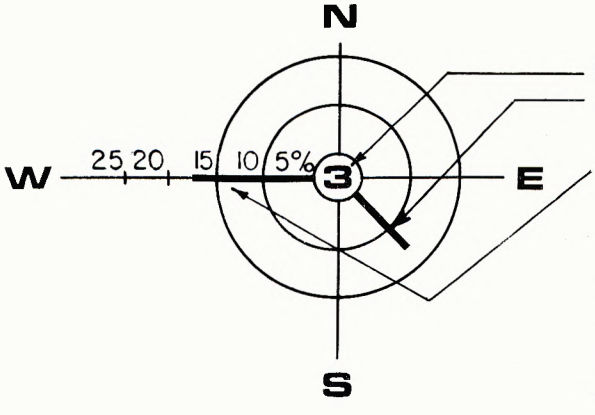

LEGEND

PERCENTAGE FREQUENCY OF CALMS

WIND DIRECTION SUMMARIZED TO 16 POINTS OF THE COMPASS

LENGTH OF SHAFT INDICATES AVERAGE PERCENTAGE FREQUENCY OF WIND

SOURCE :
WEATHER OFFICE, INTERNATIONAL AIRPORT, EDMONTON, ALBERTA.
WIND ROSES, WESTERN AND NORTHERN CANADA.
DATA FOR VERMILLION, ALBERTA, 1955 - 1966

FIGURE 7
WINTER MONTHS WIND DIRECTION & FREQUENCY

DEVELOPMENT POTENTIAL

The opportunities and restrictions identified in the previous three analysis maps are combined to generate a composite rating of development potential on Map 8, Development Potential. Four zones have been designated. Zone 1 areas have the most favourable combination of all three factors and are most suitable for development. Zone 2 areas are essentially similar to Zone 1 areas in microclimatic and cover considerations, but have more restrictive terrain conditions, thus incurring higher construction and maintenance costs. Zone 3 areas have moderate limitations such as unfavourable microclimate, imperfect drainage and dense tree cover, which limit development to non-intensive uses. Zone 4 areas have severe restrictions which are costly to overcome thus making development very difficult or unfeasible.

Village development should be located in Zones 1 and 2, as highlighted on Map 8, Development Potential. In fact, most of the existing buildings and facilities are in these areas already.

Map 8, Development Potential, forms the basis for subsequent decisions in the planning sequence: the Land Use Diagram and Village Development Concept. It summarizes the opportunities and the constraints. Future adjustment to the Village Development Concept will therefore require a review of the Development Potential map to ensure compliance with the suitability of the land.

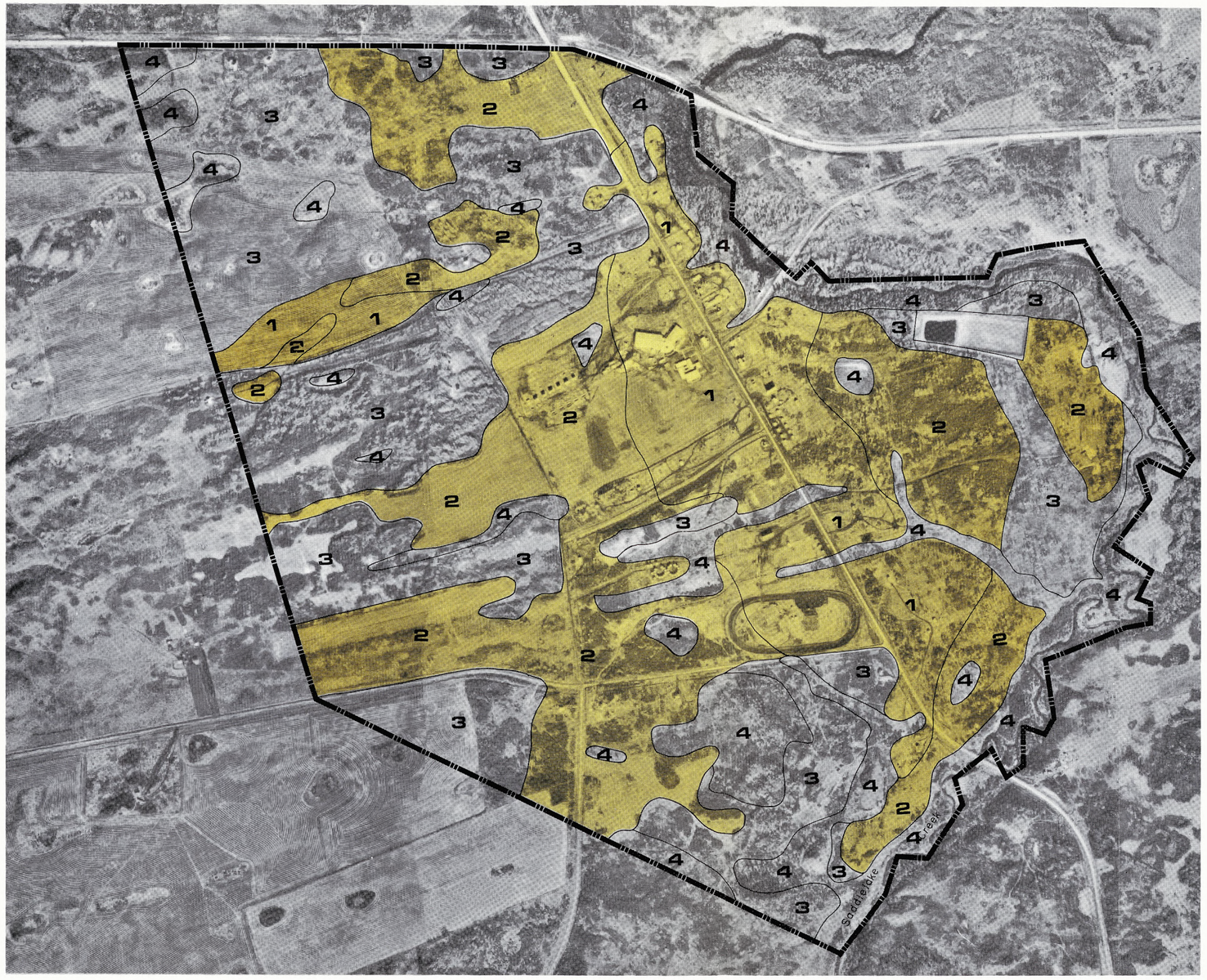

8. DEVELOPMENT POTENTIAL

DEVELOPABLE AREAS (ZONES 1 & 2)
ZONE 1 : SUITABLE , SLIGHT TERRAIN LIMITATIONS
NONE TO MINIMAL CLEARING REQUIRED
NONE TO SLIGHT MICROCLIMATIC LIMITATIONS

ZONE 2 : MODERATELY SUITABLE , SLIGHT TO MODERATE TERRAIN LIMITATIONS , NONE TO MINIMAL CLEARING REQUIRED , NONE TO SLIGHT MICROCLIMATIC LIMITATIONS

ZONE 3 : MARGINALLY SUITABLE , SLIGHT TO MODERATE LIMITATIONS , EXTENSIVE TREE CLEARING REQUIRED, SLIGHT TO MODERATE MICROCLIMATIC LIMITATIONS

ZONE 4 : UNSUITABLE , SEVERE TERRAIN LIMITATIONS AND / OR VEGETATION RESTRICTIONS , MODERATE MICROCLIMATIC LIMITATIONS

SADDLE LAKE I.R. NO. 125

VILLAGE PHYSICAL DEVELOPMENT PLAN

0 50 100 200 300m
SCALE 1 : 5000

NORTH

BUTLER KREBES ASSOCIATES LTD

5. VILLAGE DEVELOPMENT CONCEPT

LAND USE DIAGRAM

The Land Use Diagram, Map 9, integrates the Band's needs translated into program recommendations, the existing land use pattern and infrastructure, and the development suitability of the land. Five broad land use categories are represented: (1) housing, (2) community services (administration, education, services, retail and recreation), (3) manufacturing, (4) agriculture and (5) no development (within which specific conservation areas may be designated). Approximate areas for each land use category in the study area are as follows:

Housing	121.4 ha
Community Services	38.5 ha
Manufacturing	4.2 ha
Agriculture	136.7 ha
No development	144.2 ha

In general, Zones 1 and 2 areas can accomodate more intensive development including community facilities, commercial and manufacturing operations and housing. Community facilities can be developed around the existing focal points: the arena-office complex, school, church and band hall. Commercial and manufacturing areas follow the present linear pattern and highway-oriented location. Residential areas are related to secondary roads and developed around community services zones. Ample space has been allowed to accomodate future expansion of community facilities and operations.

Best rated agricultural soils (Class 2 identified on Map 16, Capability for Agriculture, Appendix) which are not designated for intensive development and which border an existing agricultural use are recommended for agricultural expansion. The remainder of areas in Zones 3 and 4 which have no practical suitability for development are designated 'no development zones'. Certain areas within this zone, such as along Saddlelake Creek, should be designated as 'conservation zones', where no development or clearing is allowed. Nature-oriented, passive recreation may be allowed. These 'no development zones' will provide within the village "green belts". These will provide visual enhancement to the community.

SERVICING CONSIDERATIONS

Map 10, Sewage Lagoon Suitability, indicates moderate to severe limitations for sewage lagoons in the study area. Rapidly permeable soils, clay loam soils on steeper slopes (over 9%), high water tables and periodic flooding cause severe limitation for this use. A comparison of Map 10 and Map 8, Development Potential, demonstrates that areas suitable for intensive development (Zones 1 and 2 areas on Map 8) have moderate limitations for sewage lagoon development. The existing sewage lagoon is located on sandy soils where rapid permeability is a severe limitation. The impact of upgrading and expansion of the existing lagoon is illustrated on Map 9, Land Use Diagram. Lagoon expansion and the ensuing 300 metre (1000 ft.) restriction around it will reduce the housing area east of the road by approximately 20 hectares (49 acres). Even with lagoon expansion, the east-west road south of the existing trailer court is the southern limit of the serviceable area by a gravity system. A lift station would be required to extend service further south. New development south of this limit can be alternately serviced by a new sewage lagoon south of the study area. The location (Site 2) recommended by the Butler Krebes municipal services study is on the east side of Saddlelake Creek and approximately 1.5 kilometres (1 mile) south of the study area (refer to Figure 2, Study Area).

An alternative to central sewage disposal system is the individual septic tank with dispersal field, which costs approximately $5000 per family dwelling. Septic systems can be used when a collection system is unavailable or economically unfeasible. However, there are disadvantages which include frequent maintenance to pump or siphon and the necessity of pumping solids from the septic tank each year. Septic tank and field systems should therefore be considered for use on an interim basis only, to be phased out as the density of development increases. Zone 1 areas (suitable for development) on Map 8, Development Potential, have none to slight limitations for on-site sewage disposal systems, and Zone 2 areas (moderately suitable for development) have moderate limitations.

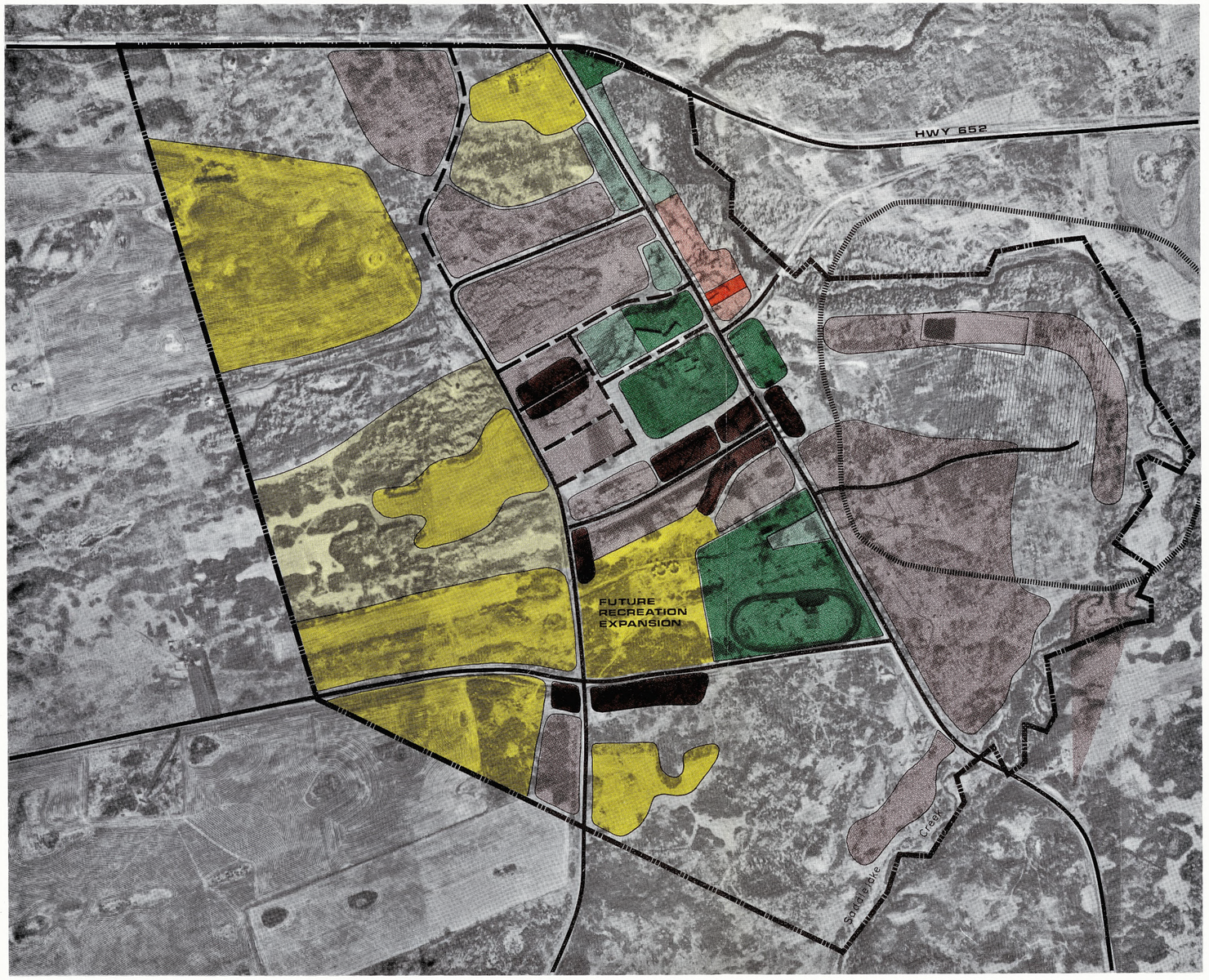

9. LAND USE DIAGRAM

- EXISTING / NEW — HOUSING
- EXISTING / NEW — COMMUNITY SERVICES (ADMINISTRATION, EDUCATION, SERVICES, RETAIL & RECREATION)
- EXISTING / NEW — MANUFACTURING
- EXISTING / NEW — AGRICULTURE
- NO DEVELOPMENT
- SEWAGE LAGOON EXPANSION TO 2002 A.D.
- 300 m SETBACK AROUND SEWAGE LAGOON
- EXISTING ROADS
- PROPOSED ROADS

SADDLE LAKE I.R. NO. 125

VILLAGE PHYSICAL DEVELOPMENT PLAN

0 50 100 200 300m
SCALE 1:5000

NORTH

BUTLER KREBES ASSOCIATES LTD

ID. SEWAGE LAGOON SUITABILITY

- MODERATELY SUITABLE
- UNSUITABLE
- DISTURBED LAND NOT RATED

SADDLE LAKE I.R. NO. 125

VILLAGE PHYSICAL DEVELOPMENT PLAN

0 50 100 200 300m

SCALE 1:5000

BUTLER KREBES ASSOCIATES LTD

NORTH

HOUSING TYPES

Prior to developing the Village Development Concept, we consulted with the Band to determine an appropriate housing type. Initially, four typical housing layouts were presented for consideration. As depicted in Figure 11, Housing Types, they comprise: (1) conventional grid layout single family housing, (2) cluster or cul-de-sac single family housing, (3) zero lot line semi-detached housing and (4) townhouses. In order to illustrate how these typical layouts work in practice, we prepared a site development plan for the housing area north of the townsite subdivision, using the four housing types (Figure 12, Application of Housing Types). The Band rejected the grid and cluster layouts because of the alienating effect on Band members. Semi-detached housing is unacceptable due to inadequate separation between houses. None of the housing types have the rear access and parking preferred by the Band. Although the Band did not want to eliminate townshouses completely, they would prefer to have a limited number of units in one location. The site south of the church as been designated for this purpose.

It was decided that a communal layout, as shown below, would be more sympathetic with the Band's lifestyle and would encourage interaction between Band members. This layout features houses grouped around a central communal space. Access and parking are at the back of the houses, from lanes enclosing each communal cluster.

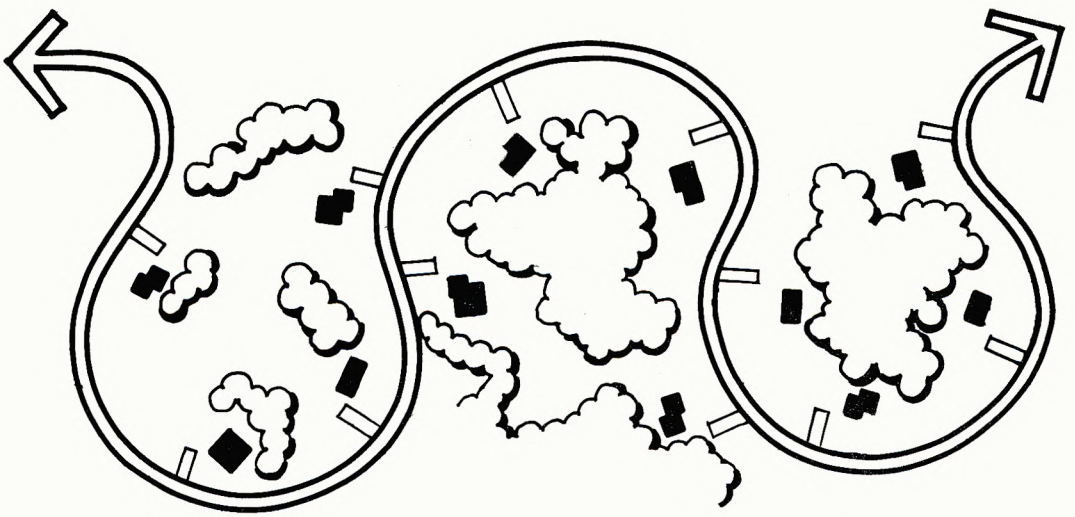

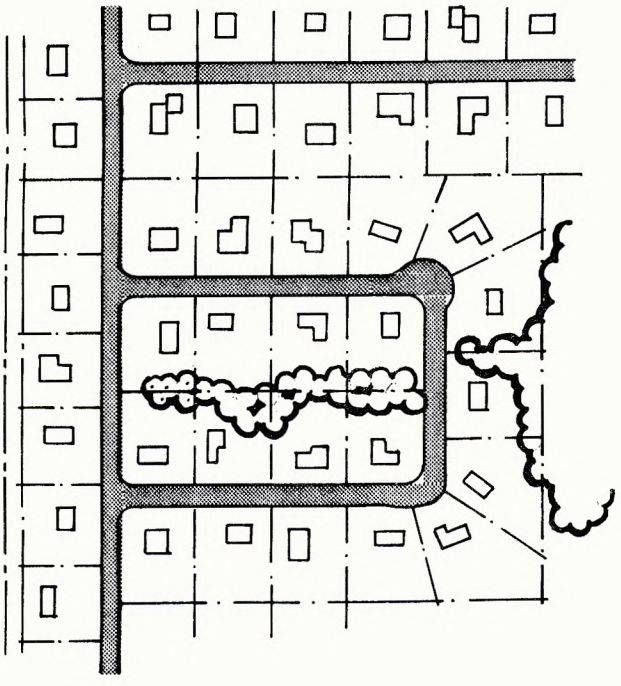

1. CONVENTIONAL GRID STREET LAYOUT - SINGLE FAMILY HOUSING (80'X 120' LOTS AT APPROXIMATELY 4 LOTS / ACRE)

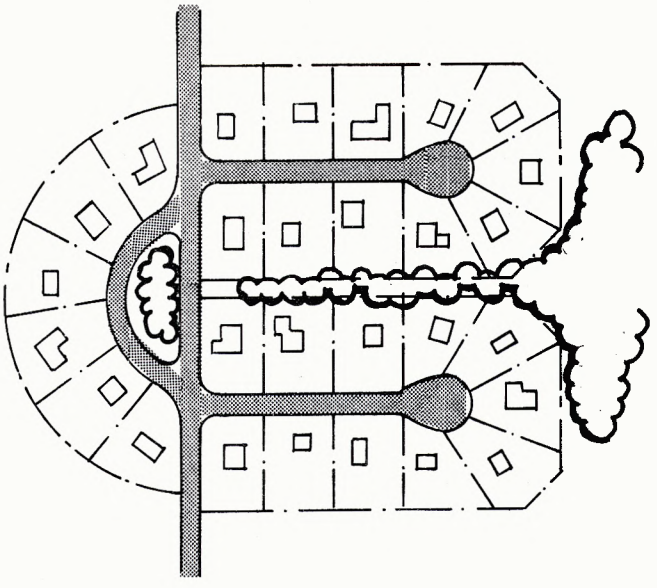

2. CLUSTER LOT IN CUL-DE SAC LAYOUT- SINGLE FAMILY HOUSING (80'X 120' LOTS AT APPROXIMATELY 3 LOTS / ACRE)

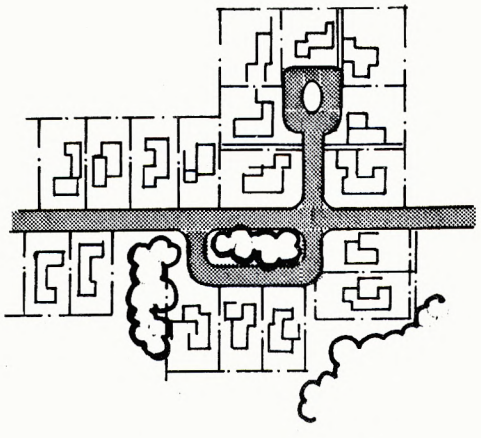

3. ZERO LOT LINE SEMI - DETACHED HOUSING (3000 - 4000 SQ.FT. LOTS AT 8 UNITS / ACRE)

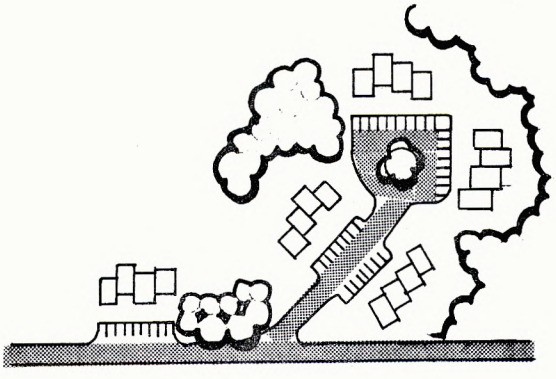

4. TOWNHOUSES - ATTACHED HOUSING (16 UNITS / ACRE)

FIGURE 11
HOUSING TYPES

FIGURE 12
APPLICATION OF HOUSING TYPES

VILLAGE DEVELOPMENT CONCEPT

The Village Development Concept on Map 13 outlines the recommendations of the Land Use Diagram in spatial terms by defining specific site areas, building locations, road network and utility corridors. Housing consists of 247 new units of which 174 are single family units generally spaced 60 metres (200 ft.) apart, in clusters varying from three to six units. The average density of communal cluster housing is 3 units/hectares (1.2 units/acre). Completion of the townsite subdivision will add another 39 single family units. When the existing sewage lagoon is phased out, 20 single family units are proposed for construction along the top of the bank where there are excellent views to the Saddlelake Creek ravine. Habitable existing houses are incorporated in the housing plan. The communal layout is also recommended for trailer courts (10 existing and 11 new units) and multiple housing (16 units). The elders lodge is located north of the office-arena complex as this location provides the best access to commercial and community facilities.

Lot boundaries have not been designated. The common central open space in each cluster can be used for family oriented passive recreation. Neighbourhood tot lots are designated throughout the housing areas for easy access by children. Loop lanes servicing individual housing clusters are interconnected to discourage random vehicle paths. The configuration of loops enforces the communal layout while avoiding driver disorientation and duplication of lanes.

A 5.5 hectare (13.6 acres) pocket of Class 2 agricultural land within the 300 metre radius 'no development zone' around the existing sewage lagoon can be utilized for community garden plots. The plan also delineates the boundary of the 'conservation zone' bordering Saddlelake Creek. It is recommended that no development or clearing be allowed in this area. In the areas for developement, selective clearing of vegetation for actual space requirements is highly recommended. Tree planting in communal open spaces lacking tree cover and around buildings for microclimatic modifications is also recommended.

Road corridors can accomodate utilities in the village core and townsite subdivision. Additional utility easements will be required for service connections to housing clusters. Internal roads should be 7.3 metres (24 ft.) wide, topped with 100 millimetres (4 in.) crushed gravel, surface treated with asphalt spray, and have ditches on both sides. Access lanes to housing clusters should be 5.5 metres (18 ft.) wide, gravel surfaced.

IMPLEMENTATION & PHASING

A decision regarding the future of the existing sewage lagoon is required so that the limit of the 300 metre radius no development zone can be established if necessary. Land areas shown on the Land Use Diagram (Map 9) for community services and manufacturing should be designated Community Use Lots and reserved for those uses only. Conservation Zones, road and utility corridors should also be designated. It is recommended that an approval procedure be administered by the Band Council whereby new developments within the Village have to comply with the Village Development Plan as to intent and location of use. Guidelines for coordinating site and architectural design are proposed in the sections to follow.

Map 14, Development Phasing, illustrates a three staged development phasing proposal. Focal community services and manufacturing areas should be developed in the immediate phase (first five years). Community services areas north of the village center can be long-range expansion beyond ten years. The housing construction program should be in phase with existing servicing capability and future utility expansion. For the immediate phase, 73 single family units, 10 trailer units and 16 multiple units are proposed in the village center. It is recommended that housing expansion in the intermediate phase occur northward to the study boundary, adding 59 single family units. Housing to the south consisting of 135 units should be implemented in the long range phase.

ENERGY CONSERVATION

● INTRODUCTION

The intent of this section is to broadly demonstrate techniques which can be applied to new and existing housing to maximize energy conservation. On the assumption that the long and severe winter season is the most important issue, the techniques basically include manipulation of natural processes and elements to make the microclimate around a building warmer, thus decreasing energy consumption of mechanical heating systems. The techniques fall into five categories: air movement control, humidity and snow drift control, solar radiation maximization, air temperature maximization and architectural response.

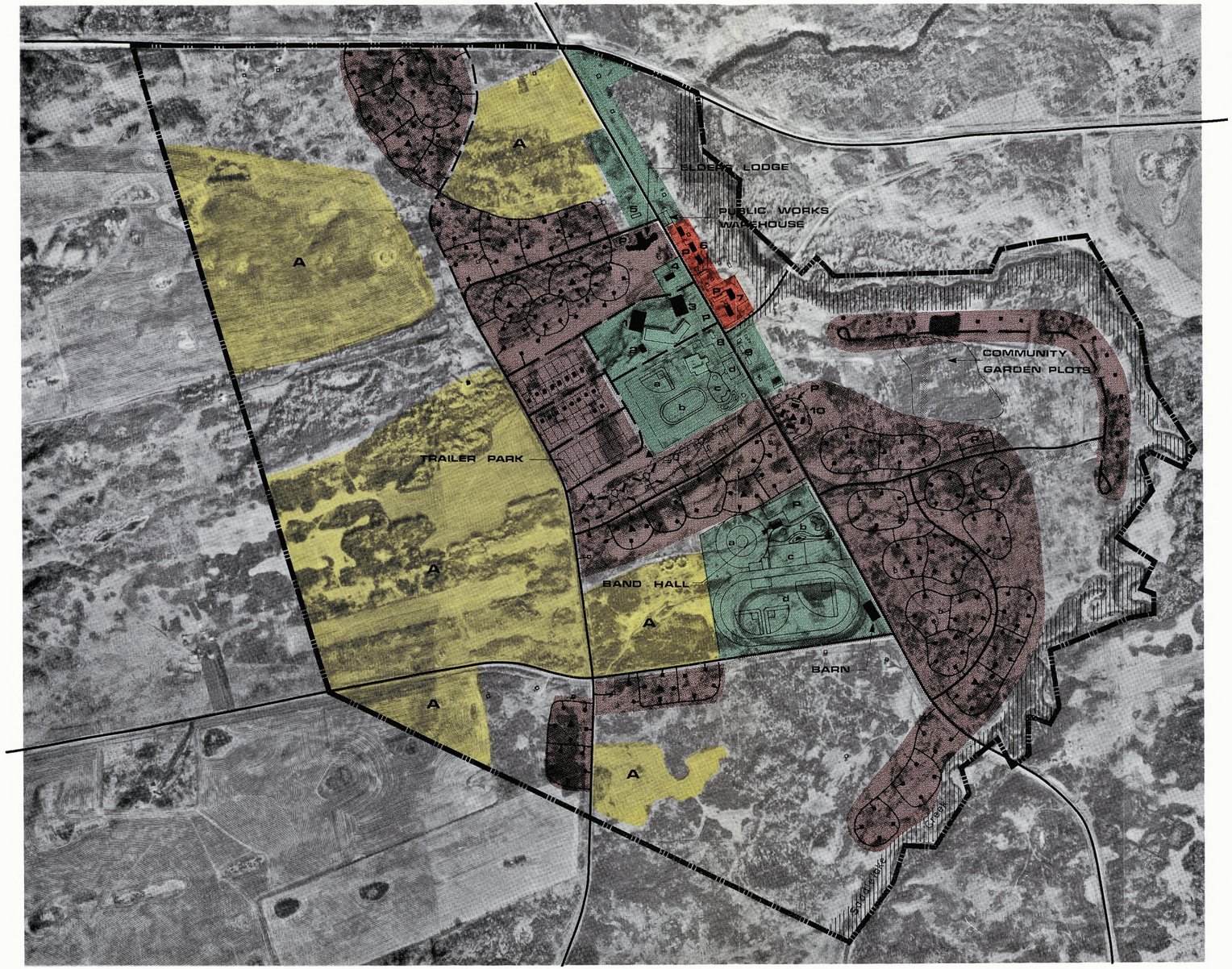

13. VILLAGE DEVELOPMENT CONCEPT

- EXISTING ROAD
- PROPOSED ROAD
- LANE FOR ACCESS TO HOUSES
- WALKWAY
- PROPOSED BUILDINGS
- EXISTING BUILDINGS
- NEIGHBORHOOD TOT LOT
- SERVICE CORRIDOR
- P — PARKING LOT

LAND USE CATERGORIES

- HOUSING
- A — AGRICULTURE
- COMMUNITY SERVICES
- CONSERVATION ZONE
- MANUFACTURING

RECREATION GROUND FACILITIES

- a — ARBOR / TEEPEES
- c — FOOTBALL / SOCCER
- b — PLAYGROUND / PICNIC AREA
- d — RODEO ARENA / BASEBALL / FASTBALL

SCHOOL GROUND FACILITIES

- a — BASEBALL
- c — PLAYGROUND
- b — FOOTBALL / SOCCER & TRACK
- d — TENNIS / HOCKEY

BUILDING FACILITIES

- 1 — ARENA & SCHOOL EXPANSION
- 6 — NEW MANUFACTURING & WAREHOUSE
- 2 — ARENA & OFFICE STORAGE
- 7 — PRE-FAB SHOP EXPANSION
- 3 — OFFICE EXPANSION
- 8 — POLICE STATION & FIREHALL
- 4 — RETAIL COMPLEX
- 9 — DAYCARE & COMMUNITY SERVICE CENTER
- 5 — WAREHOUSE
- 10 — TOWNHOUSE APPARTMENT

SAODLE LAKE I.R. NO. 125

VILLAGE PHYSICAL DEVELOPMENT PLAN

0 50 100 200 300m
SCALE 1:5000

NORTH

BUTLER KREBES ASSOCIATES LTD

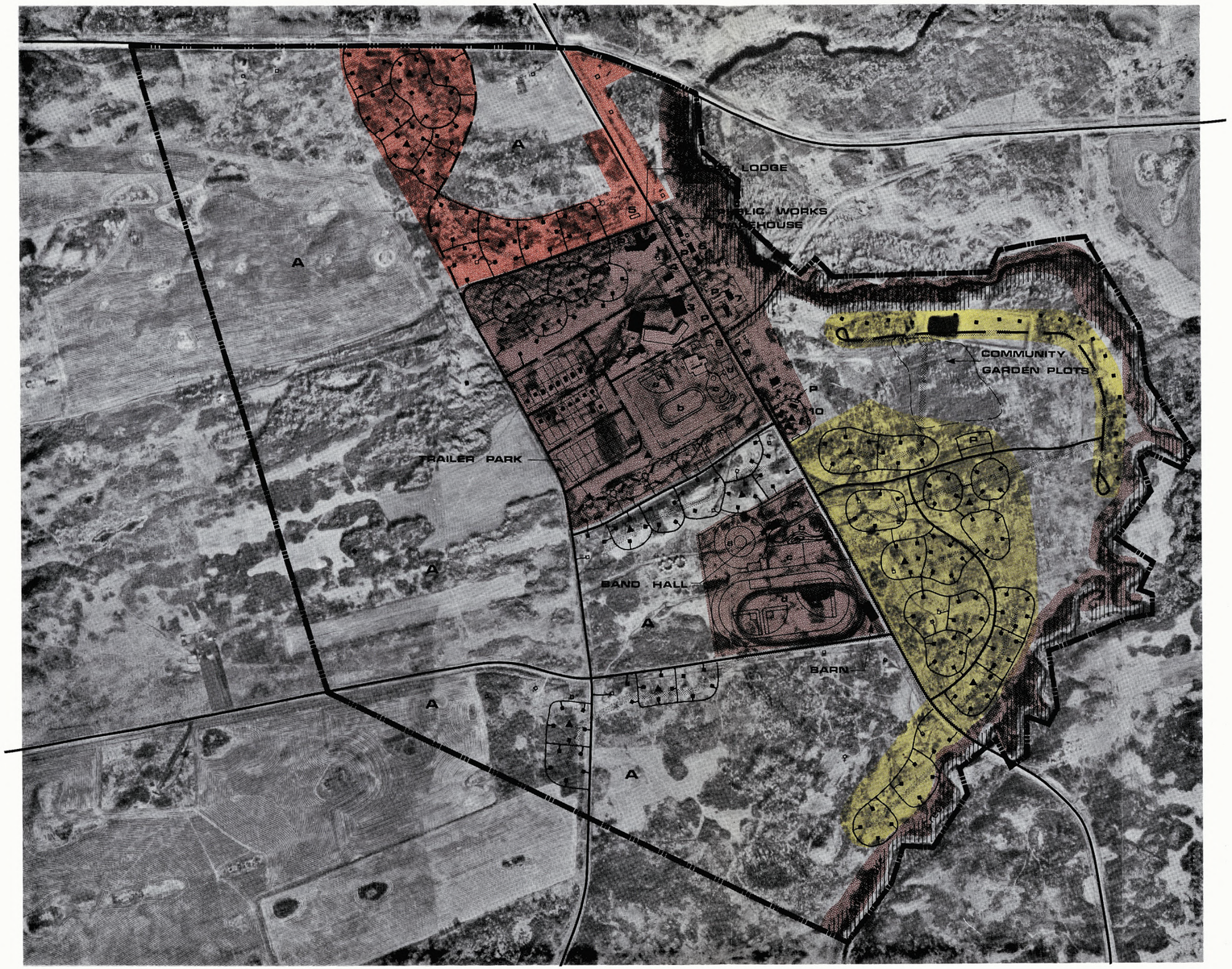

14. DEVELOPMENT PHASING

- IMMEDIATE
- INTERMEDIATE
- LONG RANGE

SADDLE LAKE I.R. NO. 125

VILLAGE PHYSICAL DEVELOPMENT PLAN

0 50 100 200 300m

SCALE 1:5000

NORTH

BUTLER KREBES ASSOCIATES LTD

● AIR MOVEMENT

The object of air movement control is to decrease convective heat loss caused by wind movement. The most effective technique is to provide a barrier (e.g. landforms, architectural elements or vegetation) perpendicular to the direction of prevailing winter wind. A lesser method is to channel winds into specific areas. Coniferous evergreen trees that branch to the ground are most effective for wind control because plants provide a penetrable windbreak which reduces velocity without causing turbulence behind the windbreak. The distance of protection behind the windbreak increases when the windbreak is penetrable. It is recommended that a double row of spruce at 3 metres (10 ft.) maximum on center be planted at 10 metres (33 ft.) away from the structure to form a continuous windbreak from the west to the north. As the spruce mature and lose lower branching, shrubs native to the reserve should be planted to fill gaps in the windbreak. When mature, the windbreak can deflect and decrease the velocity of winter storm winds.

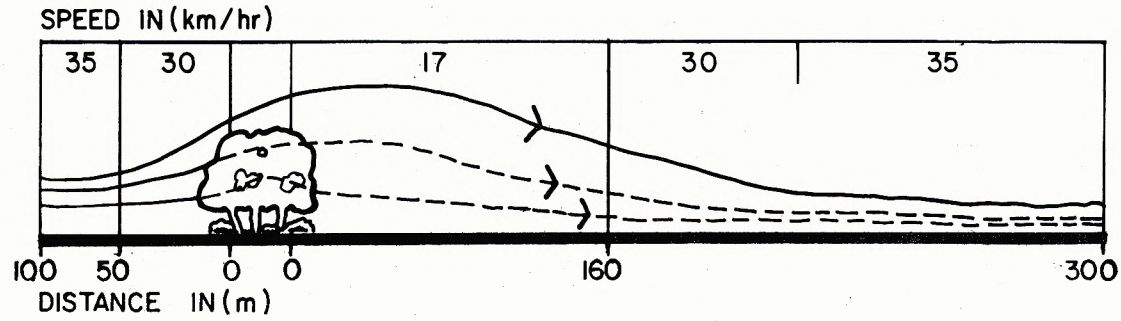

MODERATELY PENETRABLE WINDBREAK

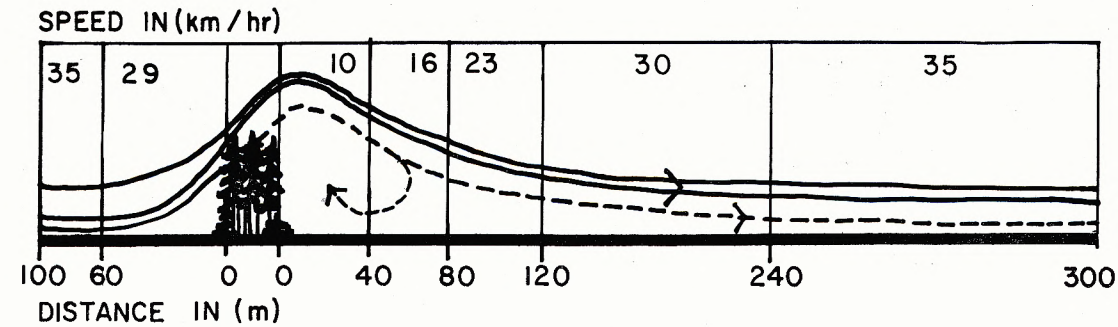

DENSE WINDBREAK

● HUMIDITY CONTROL

Humidity control is aimed at decreasing dampness near a structure. This can be accomplished by keeping the area adjacent to the structure free of low growing vegetation, thus enabling air circulation and solar radiation to speed up evaporation of moisture.

● SNOW DRIFT CONTROL

The object of snowdrift control is to prevent snowdrift accumulation or to cause snowdrifting and snow deposition to occur in a planned location and configuration. Snow accumulation can be discouraged by ensuring that wind velocity is not hindered thus allowing the wind to scour an area clean of snow. Roadways which are parallel to the general direction of the wind-borne snow can benefit from this scouring action. A windbreak can be used to manipulate snow drift. Snowscreens of 50% density provides optimum efficiency and will cause snow to accumulate in a zone from 2 to 12 snowscreen heights on the leeward side, leaving an area of approximately 12 to 15 heights behind the screen relatively free of snow. An effective windbreak therefore filters the wind and traps the snow.

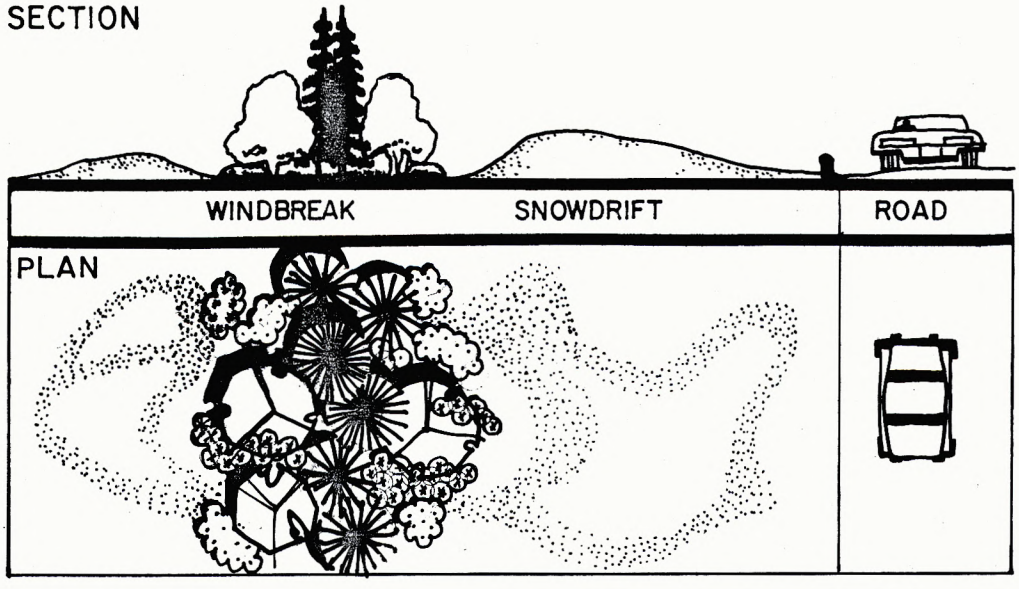

● SOLAR RADIATION

Since the sun is a source of heat, the most effective energy conservation technique is to maximize solar radiation by proper orientation of structures and elimination of site elements that obstruct sunlight.

South to southwest orientations are preferred over southeasterly orientations. Although southeasterly oriented locations receive morning sun, a greater amount of solar energy is required to warm a structure and the surrounding ground because of ground coolness in the morning. The low winter sun angle condition in northern regions can be compensated by locating structures on south and southwest facing slopes. The diagrams at right demonstrate that sites which slope toward the sun allow sunlight to strike the ground at a more direct angle, increasing solar radiation, whereas sites which slope to the north may not receive direct sunlight and its warming effect at all.

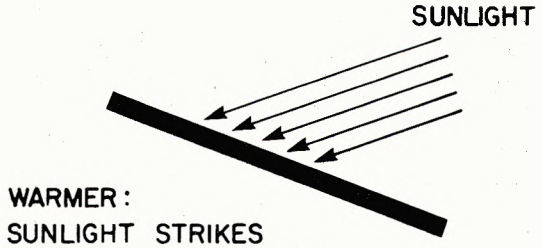

WARMER :
SUNLIGHT STRIKES
SOUTH - FACING SLOPE
AT MORE DIRECT ANGLE.

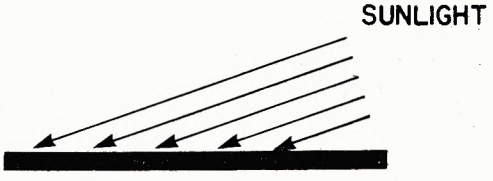

NO SOLAR ADVANTAGE :
LEVEL GROUND.

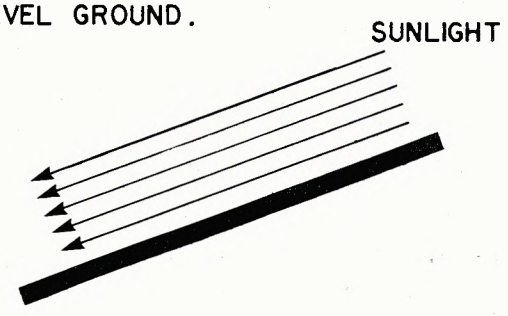

COLDER :
NORTH - FACING SLOPE RECEIVE
LITTLE OR NO SUN

The shading effect of trees must also be considered. Because of the low sun angle, very long shadows are cast in winter, especially by evergreen trees. It is recommended that evergreen trees should not be planted within 30 metres (100 ft.) of a structure in the southeast through southwest direction; and that deciduous trees should not be planted within 15 metres (50 ft.) of the structure in the same direction. This will minimize the obstruction of solar radiation by vegetation.

● AIR TEMPERATURE

In addition to maximizing solar radiation and reducing convective heat loss by air movement, cold air accumulation pockets should be avoided when locating structures. Cold air behaves similarly to water. Being heavier in density than warm air, it tends to drain downhill to low spots. Therefore, siting structures half-way up a slope will avoid cold air drainage as well as gain protection from northerly winds.

● ARCHITECTURAL RESPONSES

Appropriate architectural design helps to reduce energy demands by reducing heat losses. A lower rate of heat loss also increases the degree of human comfort. Structures which are sunken and relatively regular in configuration will present less of a profile to the wind, thus reducing heat loss caused by winter winds. The earth is also a natural insulator. Heat loss in structures can be reduced by ensuring a tight seal in and around vents and openings and by providing adequate insulation in walls, windows and roofs. Since glass conducts heat rapidly, windows should be carefully planned. South-facing windows allow radiation to warm interior spaces while the amounts of glazing on the north, east and west sides should be minimized to reduce losses. The internal functions of the structure should also be carefully located. Activity rooms should be on the south side of the structure while inactive or storage rooms should be on the north, east and west side to buffer the structure from heat loss due to storm winds. Outdoor living areas are best located on the southeast to southwest of the structure.

Shallow pitched roofs can collect an insulating layer of snow during the winter. Roofs sloping to the north have longer snow retention. Sufficient roof overhang should be provided on the south and west side to prevent overheating in summer while allowing low winter sun to enter.

Use of dark colors on structures will maximize radiation absorption while light colors, especially from pavement surrounding the structure will reflect radiation striking the ground onto the structure. However, asphalt because of its dark color, absorbs radiation by day and re-radiates it slowly by night.

In addition to heat-loss-reducing architectural design, some passive solar energy collection features can be incorporated into the design of a structure without significant increase in construction cost. Because of the lack of high cost, high maintenance components, passive solar systems are more simple, reliable and less expensive than active solar systems.

In a passive system, sun energy enters the building through south facing windows, warming interior surfaces. Window glazing prevents the escape of re-radiated energy. Heat absorption can be increased by using dark and rough textured surfaces. To prevent overheating, massive materials with large heat capacities such as masonry walls can be used to store excess heat. This stored heat is re-radiated when the surrounding air temperature drops below that of the storage materials. Passive systems can store enough energy to be of significant benefit for up to two consecutive overcast days. A conventional heating system can supply back-up heat as required. Moveable shutters which are closed over windows at night could further conserve radiant energy. The heat storage capacity and area of south-facing windows must be matched to prevent overheating.

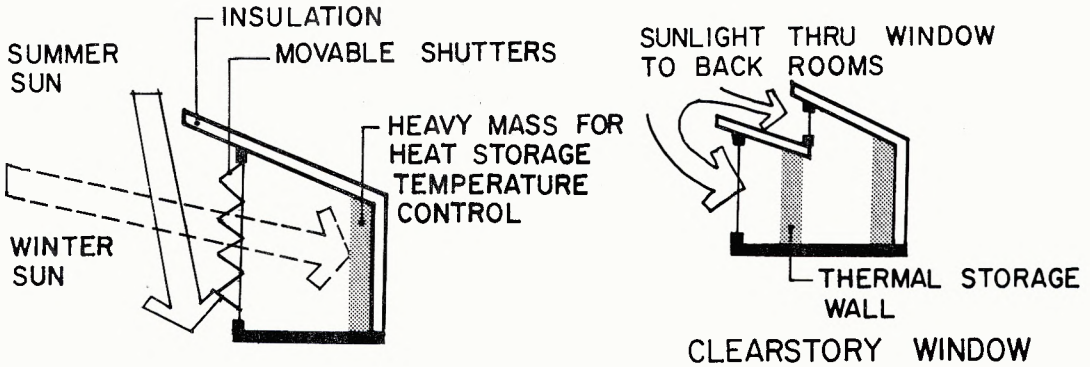

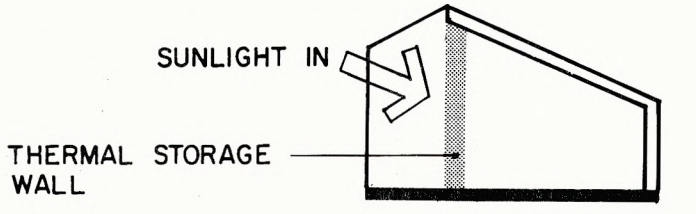

CONCLUSION

In view of the severe winters at Saddle Lake, the use of solar energy for heating is an appropriate long-term goal. The techniques presented here are a first step toward solar applications in buildings. They are designed to reduce heat losses, thus increasing human comfort; and are relatively inexpensive to employ. Figure 15 illustrates the application of energy conservation techniques. However, the use of these applications will require careful house location, design and construction.

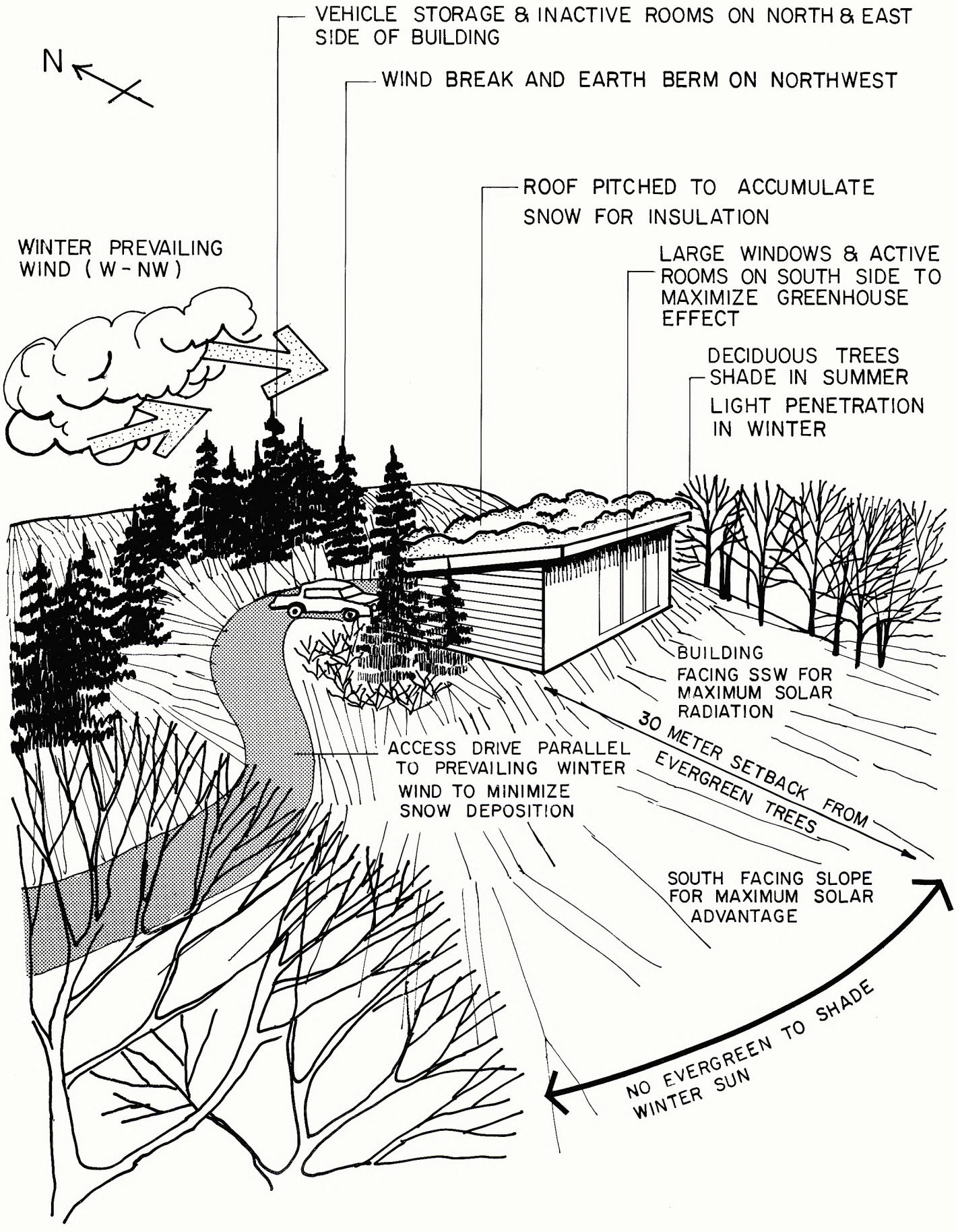

FIGURE 15
SITE DEVELOPMENT TECHNIQUES

SITE & ARCHITECTURAL CONSIDERATIONS

Existing housing in the study area is a mixture of old and new units, mostly scattered randomly. Architectural style and degree of upkeep are equally diverse. Vehicle paths, parking and storage areas occur at random, often in the front yard and in full view from the main road, due to over-clearing of existing vegetation. The overall appearance is disorderly and bleak, lacking in community identity.

In order to make the visual environment more desirable, to improve livability and to foster community pride, design coordination in housing development is necessary. The aim is to balance unity and diversity without dictating the style, size or technology of housing. Each house would be distinctive yet fit harmoniously within the cluster. Although addressed primarily to single family housing, this principle can be applied to multiple housing and non residential buildings.

Unity within a housing cluster is achieved by relating style, material, colour and finishing detail. Houses within a cluster should have a common style as well as a dominant material and colour. Variety can be provided by different floor plans, elevations, massing, orientation, setbacks and planting. These techniques also increase privacy between the houses since they do not face directly across the lane or central open space.

Coordination in lot grading ensures proper drainage, and proper gradient for roads and driveways. Smooth grade changes are recommended due to the added costs of retaining walls or slope stabilization required by steep cuts or abrupt grade changes. By following existing grades where feasible, disturbance to existing vegetation can be minimized. Existing mature trees should be retained to give new housing areas a sense of permanence and shelter.

CONCLUSION

The Village Development Concept, (Map 13) has been developed in response to the expressed needs of the Band, the suitability of the land and utility services requirements. The concept is intended to be used as a guideline. It is a flexible document. As the needs and circumstances of the Band change, the Concept can and should be modified by referring to the suitability rating and servicing considerations outlined in this study. Implementations of the concept will allow the Band to pursue village development in an orderly manner, in conjunction with natural environment and utility systems, with the knowledge that sufficient space has been reserved for future anticipated needs and future expansion. Application of the proposed energy conservation techniques and design coordination to village development would improve livability and community image.

6. APPENDIX : SYNOPSIS OF SOIL SURVEY REPORT

INTRODUCTION

Pedology Consultants was commissioned by Butler Krebes Associates Ltd., to conduct a soil survey and land suitability evaluation for the study area in the Village Development Concept. The objectives of the soils study were to conduct a detailed soil survey and to determine the soil suitability for engineering and agricultural uses.

Field survey was carried out in October 1979. Sixty-seven sites were examined and shown on the Detailed Soil Map, and seven samples representative of the principal soil materials were taken for laboratory analysis. Soil types were distinguished on the basis of taxonomic classification, texture, parent material, landform, drainage (including depth to water table), topography, stoniness and other significant charactertistics. The Detailed Soil Map (map pocket at back) was drafted on an uncontrolled airphoto mosaic at a scale of 1:5,000 (prepared from October, 1977 airphotos at 1:10,000).

The interpretation of the soil survey includes on-site sewage disposal, permanent buildings (with or without basements), sewage lagoons, source of subgrade material and soil capability for agriculture. The interpretations are not site specific; and are evaluations of performance, not recommendations for use. With this information as a basis for planning, land uses can be fitted to the capability of the soil in the most efficient and least destructive manner.

CLASSIFICATION AND INTERPRETATIONS

Well and moderately well drained Eluviated Black Chernozemic soils developed on till and glaciolacustrine deposits cover most of the study area. A sizeable area of dark grey Chernozemic soils on coarse textured glaciofluvial deposits occur along the eastern boundary, adjacent to Saddlelake Creek. Gleyed Chernozemic and Gleysolic soils occur in small depressions and drainage courses throughout the study area. Three major types of soil parent materials were identified: sandy glaciofluvial deposits; loamy glaciolacustrine materials up to 1.5 metres (5 ft.) thick overlying clay loam till; and clay loam till. On the Detailed Soil Map, each unit map delineates the extent of the soils series and the topographic class.

Interpretations of soil limitations, suitability or capability ratings evaluate each soil for a particular use in their natural undisturbed state. The degree of suitability or conversely the degree of limitations for engineering uses are grouped in three categories corresponding to good, fair and poor ratings respectively.

> None to slight soil limitations - soils relatively free of limitations or limitations are easy to overcome.
>
> Moderate soil limitations - soils having limitations which must be recognized, but can be overcome with proper planning, careful design and good management.
>
> Severe soil limitations - soils with limitations severe enough to make the proposed use questionable due to increasingly stringent requirements in planning, design and management. In many cases, remedial measures are economically unfeasible.

Maps depicting evaluations for engineering uses include Soil Limitations for On-Site Sewage Disposal (back map pocket), Map 4, Terrain Analysis (Section 4), Map 10, Sewage Lagoon Suitability (Section 5) and Map 17, Source of Road Subgrade Material.

The soils are rated for agriculatural capability using the Canada Land Inventory guidelines. This system groups mineral soils into seven classes according to their potentials and limitations for agricultural use. Classes 1 to 3 soils are capable of sustained production of common cultivated crops; Class 4 soils are considered marginal; Class 5 soils are capable of use for permanent pasture and hay; Class 6 soils are for native grazing; and Class 7 soils have no capability or potential for agricultural use. The types of limitations due to unfavorable soil and landscape characteristics are explained in the subclass categories of the rating system.

Saddle Lake is located within Agro-Climatic Area 2H according to the Agro-Climatic Areas Map of Alberta (Bowser, 1967). In Class 2H areas, precipitation is usually adequate, but wheat has suffered from frost damage in 30 percent of the years. The best rating for agriculture in the study area is Class 2. Generally, the limitations of soils in the area are inundation by streams, low available moisture capacity, adverse topography and excessive wetness. The distribution and extent of classes and subclasses are depicted on the Agriculture Capability Map in the back map pocket and summarized on Map 16, Capability for Agriculture.

● SOILS ON SANDY GLACIOFLUVIAL DEPOSITS

This group includes the Redwater soils on undulating to gently rolling topography (2 - 9% slopes) west of the main road. These soils are rapidly drained. Water tables are generally below 2 metres (6 ft.) depths. In general Redwater materials are suitable for building sites; and are a good source of subgrade material and a fair to good source of sand and gravel. However, the materials are unsuitable for sewage lagoons due to rapid permeability and are moderately suitable for septic tank sewage disposal due to groundwater contamination hazard. Redwater soils have a low moisture holding capacity and are rated Class 4 for agriculture.

● SOILS ON LOAMY GLACIOLACUSTRINE DEPOSITS

Ponoka soils predominate in the group, occuring on both sides of the main road. They are well to moderatley well drained soils on gently undulating terrain (less than 5% slopes). Water tables are generally at greater than 1.5 metres (5 ft.) depths. Ponoka soils are suitable for building sites and on-site sewage disposal; and are moderately suitable for sewage lagoons. They are a fair source of subgrade material and a poor source of sand and gravel. Ponoka soils are rated Class 2 for agriculture.

Jarvie soils occur in smaller areas in the south. Due to shallow, fluctuating water tables, they are unsuitable for all engineering uses and are rated Class 5 for agriculture.

● SOILS ON CLAY LOAM TILL

Fergy soils are the most extensive soils mapped in the study area. They are moderately well drained; contained about 30 to 40 percent clay and moderately stoney. Slopes range from 2 to 30%. Water tables are generally more than 1.5 metres (5 ft.) below ground surface. On favorable topography (2 - 9% slopes) Fergy materials are moderately suitable for building sites, on-site sewage disposal and sewage lagoons; and are rated Class 2 for agriculture. On steeper slopes they are unsuitable for engineering uses and are rated Class 3 or 5 for agriculture. They are a fair to poor source of subgrade material and are unsuitable for sand and gravel supplies.

Vilna and Mapova soils are developed on similar parent materials but are unsuitable for most engineering uses because of seasonally high water tables. They are rated Class 3 and Class 5 respectively for agriculture.

MISCELLANEOUS LAND TYPES

The alluvial soils along Saddlelake Creek are subject to periodic flooding and have generally high water tables. These materials are unsuitable for engineering use.

The 'Rough Broken' map unit on the upper slopes of the Saddlelake Creek contain soils similar to the Fergy and Ponoka soils. However, the excessive slopes (9 - 30% or more) and erosion hazard make the area unsuitable for development. The existing vegetation should be preserved to stabilize slopes.

CONCLUSION

Table 1 summarizes the ratings of soils for engineering and agricultural uses. The main limitations for engineering uses in the uplands are moderate due to clay loam textures, moderate permeability and moderate shrink-swell potentials. In places steep slopes cause severe limitations. In low areas, shallow, fluctuating water tables occur, severely limiting these locations for most uses. The agricultural capability of the soils ranges from Class 2 to 6. Climate limits the soils to Class 2 at best. However, adverse soil properties, wetness and topography present further limitations.

TABLE 1 - RATING OF SOILS FOR SELECTED USES

Soil Series	Map Units	Sewage Lagoons	On-Site Sewage Disposal	Buildings: With Basements	Buildings: Without Basements	Subgrade Material	Sand and Gravel Source	Agriculture Capability
Alluvium	Av b-c	X1,12	X1,2	X1,2	X1,2	P	P	5 I W
	Fg c	M10	M10	S-M22	S-M22	P-F	U	2C
	Fg c-d	M3,10	M10	S-M22	S-M22	P-F	U	2C
Fergy	Fg d							
	Fg e	X3	M3,10	M3,22	M3,22	P-F	U	3T
	Fg f	X3	X3,10	X3	X3	P-F	U	5T
Jarvie	Jv b	X2,10	X2	X2	X2	P	P	5W
Mapova	Mp b	X2	X2	X2	X2	P	U	5W
	Mp b-c							
Ponoka	Pk b-c	M10	S	S	S	F	P	2C
Redwater	Rw c	X9	M12	S	S	G	F-G	4M
	Rw d	X3,9	M12	S	S	G	F-G	4 M T
	Rw-Jv c-e	X9	X12,2	X3,2	X3,2	F	F-P	5 M T
Rough Broken	Rb e-f	X3	X3	X3	X3	P-F	P	6T
Vilna	Vn b	M2	X2	X2	M2	P	U	3W
	Vn c-d	X2,3	X2	X2	M2	P	U	3W

Degree of Limitation

S - None to Slight
M - Moderate
X - Severe

Topographic Classes

b: 0 - 2% slopes
c: 2 - 5% slopes
d: 5 - 9% slopes
e: 9 -15% slopes
f: 15 -30% slopes

Degree of Suitability

U - Unsuitable
P - Poor
F - Fair
G - Good

Soil Capability Classes

2 - Moderate limitations
3 - Moderately severe limitations
4 - Severe limitations
5 - Very severe limitations
6 - Extreme limitations

Kind of Limitations

1. Flooding hazard (overflow)
2. Seasonally high groundwater table or surface ponding
3. Excessive slope
9. Rapid permeability (droughtiness)
10. Moderate permeability
12. Groundwater contamination hazard
22. Moderate shrink-swell potential

C. Climate
I. Inundation (flooding)
M. Low moisture holding capacity
T. Adverse topography
W. Excess water

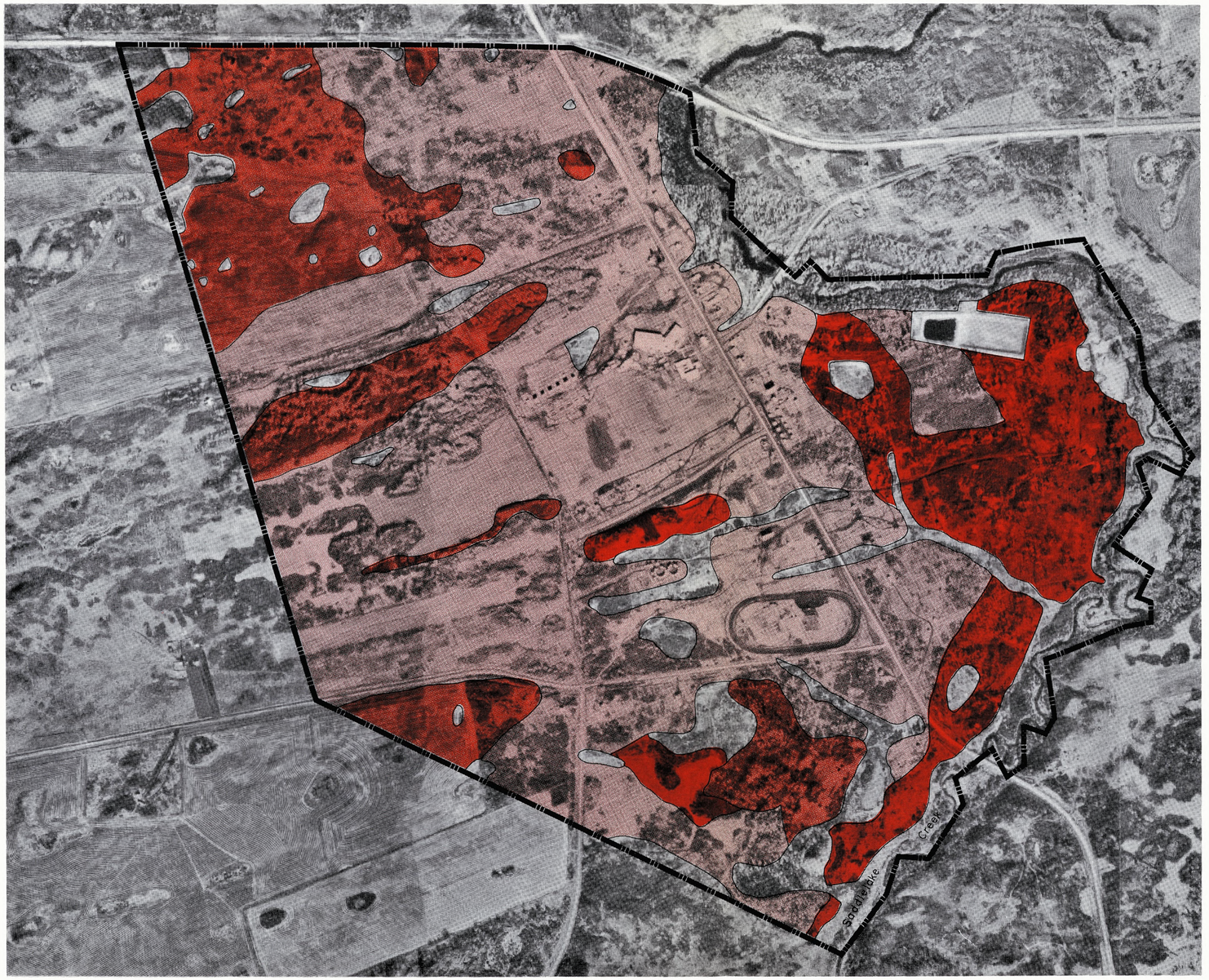

16. CAPABILITY FOR AGRICULTURE

- CLASS 5 & 6 , DISTURBED LANDS : UNSUITABLE
- CLASS 4 : SEVERE LIMITATIONS DUE TO ADVERSE TOPOGRAPHY & LOW SOIL MOISTURE
- CLASS 3 : MODERATELY SEVERE LIMITATIONS DUE TO EXCESSIVE SLOPES OR WETNESS
- CLASS 2 : BEST RATED FOR THE AREA, NO SOIL OR LANDSCAPE LIMITATIONS

SADDLE LAKE I.R. NO. 125

VILLAGE PHYSICAL DEVELOPMENT PLAN

0 50 100 200 300m

SCALE 1:5000

NORTH

BUTLER KREBES ASSOCIATES LTD

17. SOURCE OF ROAD SUBGRADE MATERIAL

- GOOD
- FAIR
- POOR

SADDLE LAKE I.R. NO. 125

VILLAGE PHYSICAL DEVELOPMENT PLAN

0 50 100 200 300m

SCALE 1:5000

NORTH

BUTLER KREBES ASSOCIATES LTD

7. BIBLIOGRAPHY

Alberta Energy and Natural Resources, Solar Energy Matters. Alberta, 1979.

Alberta Executive Council, Human Resources Research and Development, Appendix F - Indians of the Saddle Lake Reserve, Community Opportunity Assessment. Alberta, 1967.

Alberta Native Secretariat, Public Opinion Questionnaire: Saddle Lake Reserve Economic Development Committee. Alberta, 1976.

Butler Krebes Associates Ltd., Saddle Lake Indian Reserve Waterworks, Sewage Collection and Disposal Evaluation - Preliminary Report. Alberta, 1978.

Douglas J. Cardinal Architect Ltd., Saddle Lake Indian Community Development Master Plan 1978 - 2002 and Appendices. Alberta, 1978.

Nesco Consulting ltd., Soils Investigation at Site of Proposed School on the Saddle Lake Indian Reserve. Alberta, 1973.

Pedology Consultants, Soil Survey and Land Suitability Evaluation, Saddle Lake Indian Community. Alberta, 1979.

Robinette, G.O., ed., Landscape Planning for Energy Conservation. Reston, Va., Environmental Design Press, 1977.

Rowe, J.S., Forest Regions of Canada. Ottawa, Information Canada, 1972.

Strong, Lamb & Nelson Ltd., Saddle Lake Recreation Area. Alberta, 1974.

E178.A34
1388

SOIL LIMITATIONS FOR ON-SITE SEWAGE DISPOSAL

SADDLE LAKE INDIAN COMMUNITY

0 2000 5000 10000 15000 20000

DEGREE OF LIMITATION:

S – none to slight
M – moderate
X – severe

KIND OF LIMITATION:

1 – Flooding hazard
2 – Seasonally high water table
3 – Excessive slope
9 – Rapid permeability
10 – Moderate permeability
12 – Groundwater contamination hazard
22 – Moderate shrink-swell potential

NOTATIONS

DL – Disturbed Land
f – fill
b – borrow pit
s – sand pit

compiled on uncontrolled mosaic
by
PEDOLOGY CONSULTANTS
November, 1979

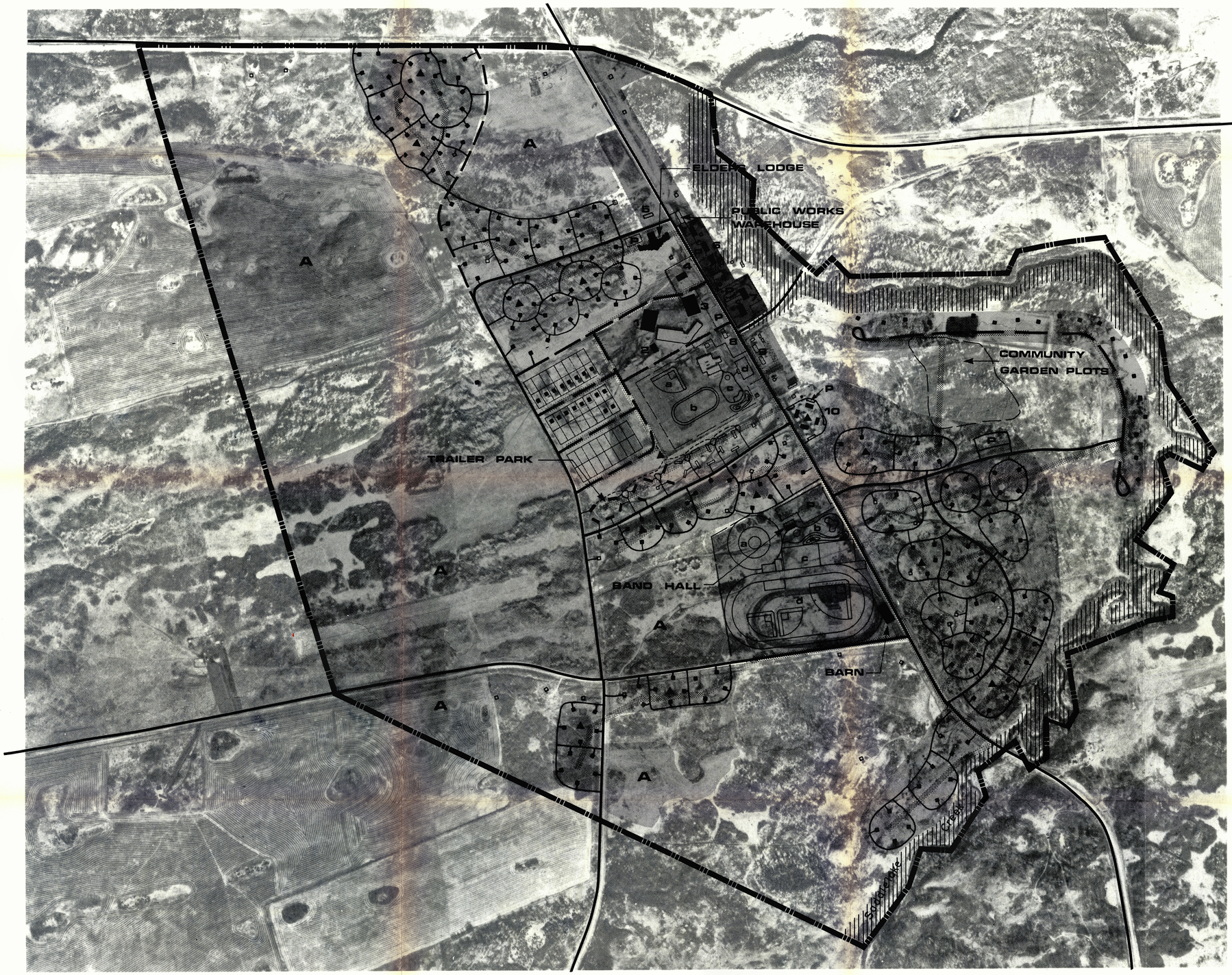

13. VILLAGE DEVELOPMENT CONCEPT

- EXISTING ROAD
- PROPOSED ROAD
- LANE FOR ACCESS TO HOUSES
- WALKWAY
- PROPOSED BUILDINGS
- EXISTING BUILDINGS
- NEIGHBORHOOD TOT LOT
- SERVICE CORRIDOR
- P — PARKING LOT

LAND USE CATERGORIES

- HOUSING
- COMMUNITY SERVICES
- MANUFACTURING
- A — AGRICULTURE
- CONSERVATION ZONE

RECREATION GROUND FACILITIES

- a — ARBOR / TEEPEES
- b — PLAYGROUND / PICNIC AREA
- c — FOOTBALL / SOCCER
- d — RODEO ARENA / BASEBALL / FASTBALL

SCHOOL GROUND FACILITIES

- a — BASEBALL
- b — FOOTBALL / SOCCER & TRACK
- c — PLAYGROUND
- d — TENNIS / HOCKEY

BUILDING FACILITIES

- 1 — ARENA & SCHOOL EXPANSION
- 2 — ARENA & OFFICE STORAGE
- 3 — OFFICE EXPANSION
- 4 — RETAIL COMPLEX
- 5 — WAREHOUSE
- 6 — NEW MANUFACTURING & WAREHOUSE
- 7 — PRE-FAB SHOP EXPANSION
- 8 — POLICE STATION & FIREHALL
- 9 — DAYCARE & COMMUNITY SERVICE CENTER
- 10 — TOWNHOUSE APPARTMENT

SADDLE LAKE I.R. NO. 125

VILLAGE PHYSICAL DEVELOPMENT PLAN

0 50 100 200 300m

SCALE 1: 5000

NORTH

BUTLER KREBES ASSOCIATES LTD

AGRICULTURE CAPABILITY

Of Band Office Area

SADDLE LAKE INDIAN COMMUNITY

0 2000 5000 10000 15000 20000

SOIL CAPABILITY CLASSES:

CLASS 2: moderate limitations
CLASS 3: moderately severe limitations
CLASS 4: severe limitations
CLASS 5: very severe limitations
CLASS 6: extreme limitations

KINDS OF LIMITATIONS:

C: climate
I: inundation (flooding)
M: a low moisture holding capacity
T: adverse topograph
W: excess water

NOTATIONS

DL – Disturbed Land
f – fill
b – borrow pit
s – sand pit

compiled on uncontrolled mosaic

by

PEDOLOGY CONSULTANTS

November, 1979

ERA 434
2255

EDMAH 838

DETAILED SOIL MAP
Of Band Office Area
SADDLE LAKE INDIAN COMMUNITY

0 2000 5000 10000 15000 20000

LEGEND:

MATERIAL	SOIL SERIES	SYMBOL	DOMINANT SOILS	DRAINAGE
Sandy Glaciofluvial	REDWATER	Rw	Orthic Dark Gray Chernozems	Rapid
Loamy Glaciolacustrine	PONOKA	Pk	Eluviated Black Chernozems	Well and moderately well
	JARVIE	Jv	Gleysolic Soils	Poor
Clay Loam Till	FERGY	Fg	Eluviated Black Chernozems	Well and moderately well
	VILNA	Vn	Gleyed Eluviated Black Chernozems	Imperfect
	MAPOVA	Mp	Humic Eluviated and Orthic Humic Gleysols	Poor
MISCELLANEOUS LAND TYPES	Alluvium	Av	Undifferentiated Floodplain Soils	Poor
	Rough Broken	RB	Undifferentiated soils on steep river banks	Well
	DISTURBED LAND	DL	DLs sand pit DLb borrow pit DLf land filled depression	

TOPOGRAPHIC CLASSES:

b: 0 – 2% slopes
c: 2 – 5% "
d: 5 – 9% "
e: 9 – 15% "
f: 15 – 30% "

CONVENTIONS:

Pk — soil series symbol
c — topographic class

X55 — soil inspection site

~ — map unit boundary

Compiled on uncontrolled mosaic
by

PEDOLOGY CONSULTANTS
November, 1979