BVAEP Vancouver. Env. Can. Lib./Bib.
36 007 575

REF
PAES
85-2

Lower Mainland and South Coast B.C. Precipitation Chemistry Data

R.R. McLaren

Report PAES 85-2

Scientific Services Division
Atmospheric Environment Service, Pacific Region
Environment Canada
Vancouver, Canada

November 1, 1985

ENVIRONMENT CANADA - ATMOSPHERIC ENVIRONMENT SERVICE
Suite 700-1200 W. 73rd. Avenue
Vancouver, B.C.
V6P 6H9

LOWER MAINLAND AND SOUTH COAST B.C. PRECIPITATION CHEMISTRY DATA

by

R.R. McLaren

ABSTRACT

This report presents the precipitation chemistry data from the Lower Mainland Sampling Program for the period January 1982 to December 1982 as well as the data from the South Coast B.C. Sampling Program for the period December 1982 to June 1984.

Report PAES 85-2

This report has received limited distribution. Reference to it is permitted if the words "unpublished manuscript" are part of the bibliographic entry.

LOWER MAINLAND AND SOUTH COAST B.C.
PRECIPITATION CHEMISTRY DATA

1.0 INTRODUCTION

In 1977 the Atmospheric Environment Service established a network of precipitation chemistry stations, known as the CANSAP (Canadian Network for Sampling Precipitation) network. Early data from this network indicated that precipitation at coastal B.C. stations had pH values near 5.0. The Atmospheric Environment Service, Pacific Region, established two sampling networks in Southwestern B.C., under the Western LRTAP (Long Range Transport of Air Pollutants) program, to gather more data on precipitation chemistry on the B.C. coast.

2.0 SAMPLING LOCATIONS

The Lower Mainland network in operation from January to December 1982, consisted of fourteen sampling locations. Four of these sites were located at high elevation mountain areas. During the period of study the precipitation collected at the mountain sites was mainly snow. A map of this network is shown in Fig. 1.

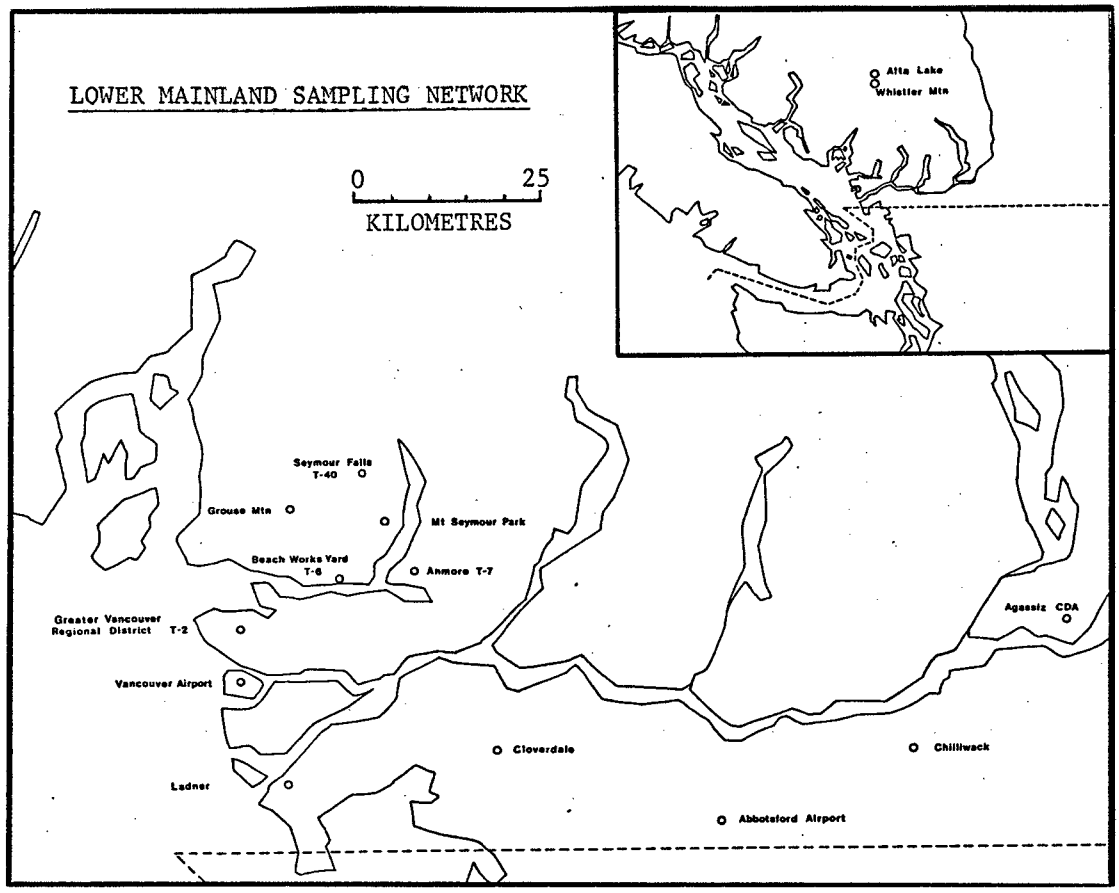

Fig. 1

The South Coast B.C. network, established in December 1982 and currently expected to be operational into 1986, incorporates some of the Lower Mainland network sites as well as additional sites to the west, paralleling the Canada/USA border, as shown in Fig. 2.

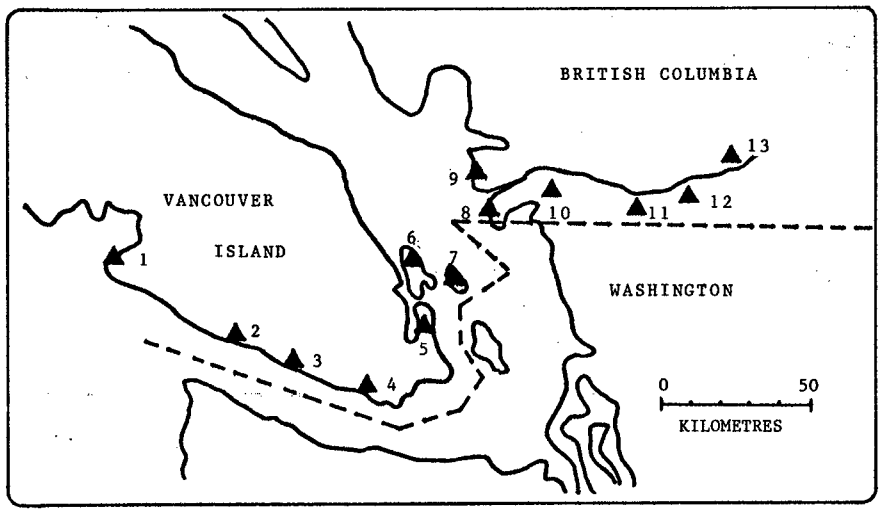

SOUTHERN COASTAL EVENT SAMPLING NETWORK

1. Bamfield
2. Port Renfrew
3. Jordan River
4. Sooke
5. Saanichton
6. Saltspring Island
7. Pender Island
8. Ladner
9. Vancouver (A)
10. Cloverdale
11. Abbotsford (A)
12. Chilliwack
13. Agassiz

Fig. 2

In addition, during 1982 and 1983 samples were collected at Port Hardy, Terrace and Cape St. James.

3.0 SAMPLING EQUIPMENT

3.1 RAIN

Rain samples were collected using a 22 cm funnel draining into a 1 litre polyethylene sample bottle. The bottles were acid washed and rinsed by the Water Quality Laboratory, Inland Waters Directorate. The samplers were kept covered until a rain event was expected, at which time they were opened for the duration of the storm. At the end of the sampling period the sample bottle was removed and capped and the funnel was covered until the next event.

Fig. 3 details the type of sampler used for the Lower Mainland study, while Fig. 4 shows an improved version with a more dust proof design used in the current South Coast network. The earlier samplers incorporated a ring of spikes around the top of the collection funnel to discourage birds from roosting on the sampler. This was found unnecessary so later versions did not have spikes.

In most cases the samplers are mounted on pipe stakes about 1.5 metres above the ground in an open area.

3.2 SNOW

Operators of snow sampling sites were supplied with 32 cm square plastic containers with snap on lids. The containers were washed by the Water Quality Laboratory using the same protocol as the bottles. The snow sample was allowed to melt at room temperature after collection and was then transferred to a 1 litre plastic bottle.

4.0 SAMPLE HANDLING AND QUALITY CONTROL

The samples from local stations were refrigerated and delivered to the laboratory within 36 hours of collection.

The samples from remote stations were mailed to the A.E.S. Regional Office in Vancouver and were forwarded to the laboratory as soon as possible, usually within 1 week of the sampling date.

Distilled water was poured through the samplers and sent for analysis along with routine samples. No appreciable differences were detected between fresh distilled water and that poured through the samplers.

Samples with obvious contamination, ie. insects, debris etc. were not included in the data sets. Similarly, samples with questionable values or unexplained ion imbalances were discarded, except in cases of high ammonium concentration as discussed in Sec. 5.1 below.

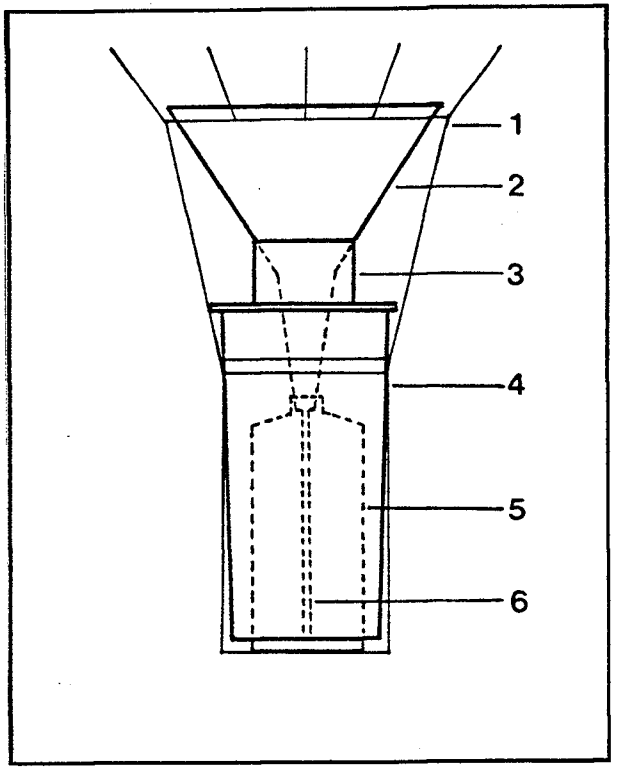

1. STAINLESS STEEL FRAME
2. LINEAR POLYETHYLENE FUNNEL
3. PLASTIC COLLAR
4. CYLINDRICAL HOLDER
5. 1 LITRE LINEAR POLYETHYLENE BOTTLE
6. TYGON TUBING

Fig. 3

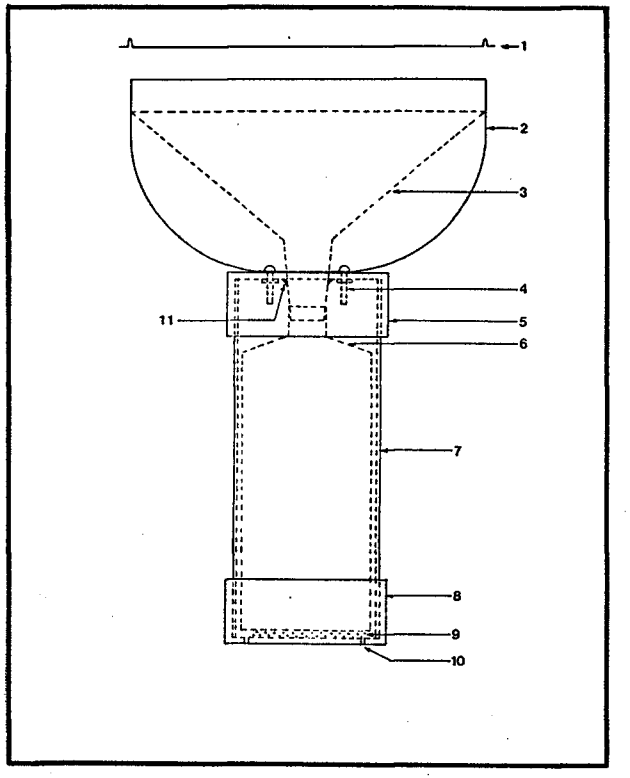

1. COVER
2. PLASTIC HOUSING
3. LINEAR POLYETHYLENE FUNNEL
4. BRASS MACHINE SCREWS
5. 4" A.B.S. PIPE CAP
6. 1 LITRE LINEAR POLYETHYLENE SAMPLE BOTTLE
7. 4" A.B.S. PIPE
8. 4" A.B.S. PIPE CAP
9. FOAM SHEET (TO MAINTAIN FUNNEL/BOTTLE SEAL)
10. OVERFLOW DRAIN HOLES
11. SILICON SEAL

Fig. 4

5.0 ANALYSIS

Since data are still being collected, an in depth analysis is yet to be done, however, several patterns are apparent.

5.1 LOWER MAINLAND SAMPLING

The arithmetic averages of pH (not volume weighted) for 1982 are plotted in Fig. 5. It can be seen that the values are much higher (less acidic) in the Fraser Valley. These stations also have substantially higher ammonium concentrations. The ammonium partially neutralizes the acid resulting in the higher pH values. However, the high ammonium concentrations distort the ion balance calculations. Since we believe the ammonium to be of agricultural origin, particularly from poultry production, the data have not been discarded, however further analysis is required to understand the chemical processes affecting these locations.

It would also appear that the stations closest to the city core have higher sulphate and nitrate values than those in the Fraser Valley. Sodium and chloride values are also found to decrease as one moves eastward, which is to be expected as the distance from the salt water increases.

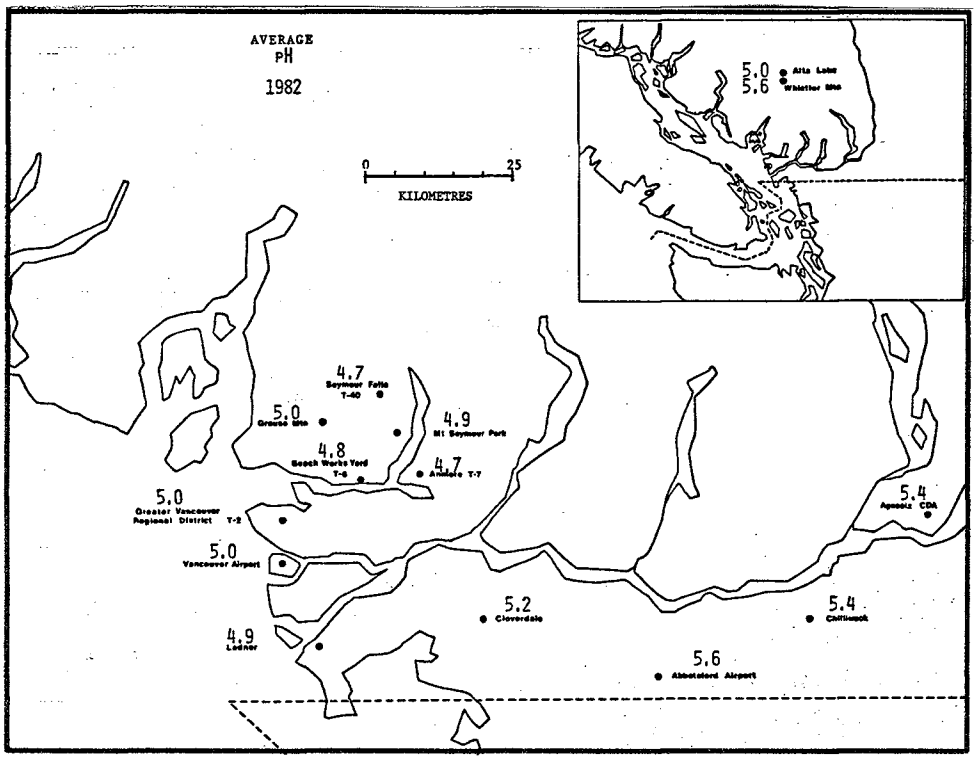

Fig. 5

5.2 SOUTH COAST NETWORK

The data from this network, when plotted on a west to east order, as in Figs. 6 and 7, reveal an interesting pattern. The station numbers in the aforementioned figures refer to the map in Fig. 2.

The hydrogen ion averages (all averages quoted are not volume weighted) show a distinct increase in the central Georgia Strait area, as does the arsenic. An examination of Table 1, which lists the station averages for 1983 of all measured parameters reveals similar patterns.

6.0 DATA LISTINGS

The data for the period of record for each station is listed in Appendix A. The main reason for missing parameters is lack of sufficient sample volume. A complete analysis required 500 ml of sample. When less than the minimum volume was collected, metals were given last priority and only done if sufficient sample remained after the other analyses were done. A description of the analytical methods is given in Appendix B.

The NH_4 and NO_3 are expressed as mg/L NH_4 and NO_3, not as (N). The conversion factors are:

*mg/L nitrate N x 4.43 = mg/L NO_3
mg/L ammonia N x 1.288 = mg/L NH_4

The excess sulphate, excess calcium and sea sulphate values were calculated using the sodium value to determine the portion of the calcium and sulphate due to oceanic origin, based on sea water concentrations of the above ions. The excess value is what remains after the contribution from the sea is subtracted from the measured value. Sea water concentrations for sulphate, calcium and sodium from Goldberg et al (1971) are:

SO_4 = 2.7×10^6 ug/L
Ca = $.41 \times 10^6$ ug/L
Na = 11.0×10^6 ug/L

The above values give the correction factors used in the calculations, as follows:

a) sea sulphate (mg/L) = Na (mg/L) x .245
b) sea calcium (mg/L) = Na (mg/L) x .037

* Analytical Methods Manual (Inland Waters Directorate, 1979)

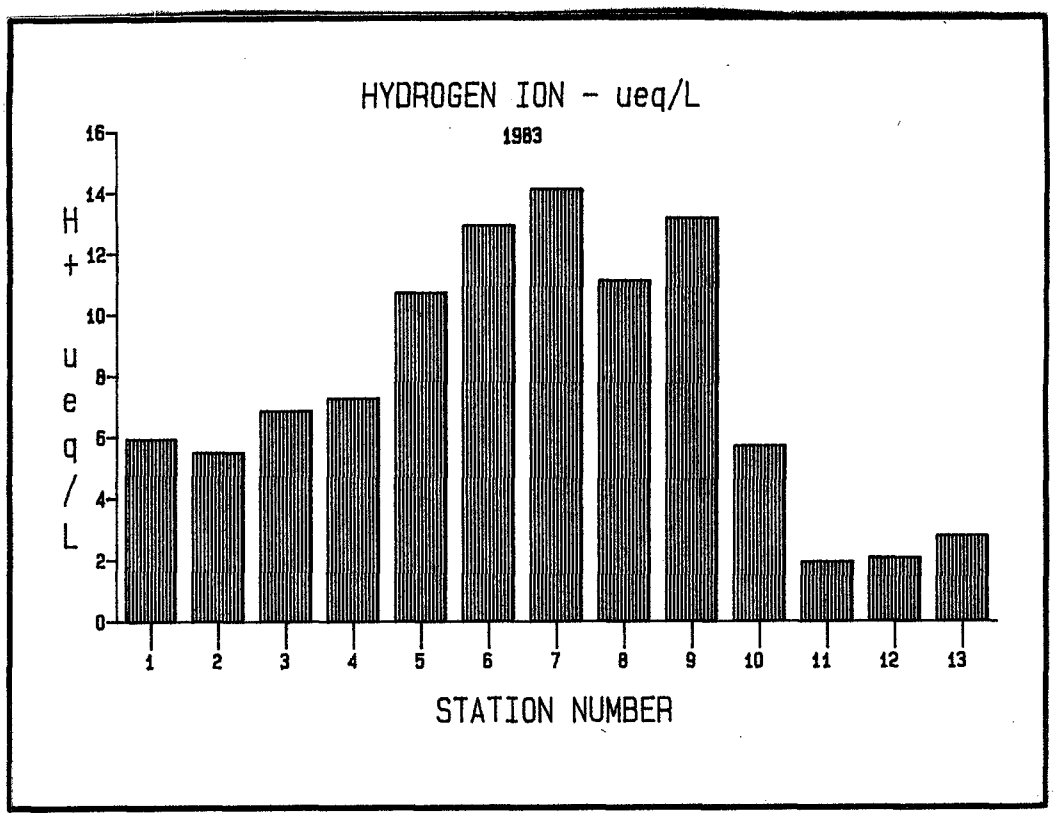
HYDROGEN ION - ueq/L
1983
H+ ueq/L
16
14
12
10
8
6
4
2
0
1
2
3
4
5
6
7
8
9
10
11
12
13
STATION NUMBER

Fig. 6

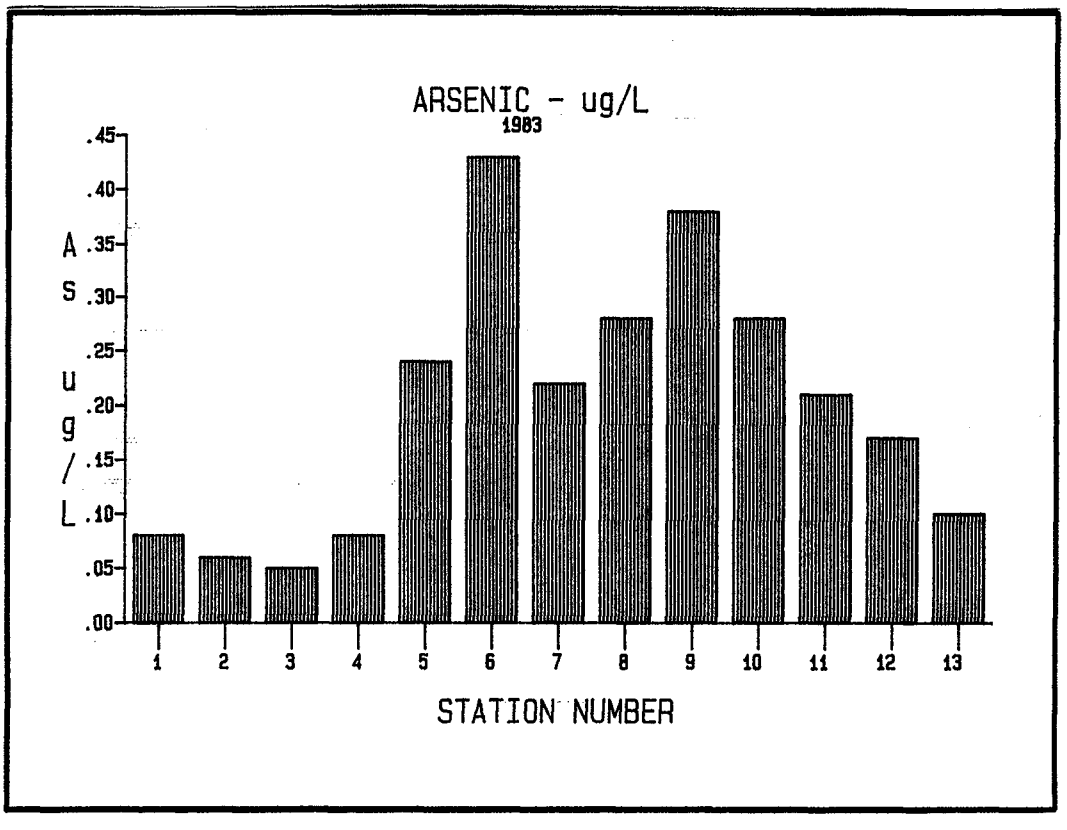
ARSENIC - ug/L
1983
As ug/L
.45
.40
.35
.30
.25
.20
.15
.10
.05
.00
1
2
3
4
5
6
7
8
9
10
11
12
13
STATION NUMBER

Fig. 7

1983 SOUTH COAST RAIN CHEMISTRY AVERAGES
IN MILLIGRAMS PER LITRE

STATION	H+	pH	COND	Cd	Cu	Ca	Mg	S. Acd	T.Acd	NH4	Fe	Pb	Mn	K	Na	Zn	Cl	SO4	NO3	SO4E	As
BAMFIELD	5.94	5.30	15.2	.0003	.002	.09	.223	8.4	35.9	.015	.014	.001	.002	.1	1.78	.001	3.31	.42	.135	.053	.00008
standard dev.		*.25*								*.035*								*.47*	*.151*	*.071*	*.00009*
PORT RENFREW	5.49	5.34	11.1	.0002	.002	.05	.126	8.9	36.5	.016	.024	.001	.001	.1	1.04	.002	1.88	.28	.198	.078	.00006
standard dev.		*.31*								*.019*								*.19*	*.206*	*.119*	*.00002*
JORDAN RIVER	6.85	5.24	8.9	.0002	.001	.05	.093	9.5	38.9	.017	.014	.001	.001	.1	.76	.002	1.32	.19	.197	.046	.00005
standard dev.		*.26*								*.018*								*.13*	*.219*	*.051*	*.00001*
SOOKE	7.26	5.20	9.3	.0002	.002	.05	.078	9.7	38.4	.018	.015	.002	.002	.1	.64	.001	1.15	.27	.202	.137	.00008
standard dev.		*.24*								*.017*								*.19*	*.147*	*.155*	*.00005*
SAANICHTON	10.72	5.15	15.2	.0008	.007	.12	.164	12.8	45.3	.131	.034	.003	.003	.1	1.31	.008	2.24	.69	.522	.368	.00024
standard dev.		*.49*								*.285*								*.48*	*.301*	*.315*	*.00020*
SALTSPRING I.	12.92	4.93	11.8	.0002	.002	.08	.096	14.9	49.9	.051	.011	.002	.001	.2	.72	.004	1.32	.60	.476	.423	.00043
standard dev.		*.19*								*.058*								*.40*	*.275*	*.376*	*.00023*
PENDER I.	14.11	4.92	12.3	.0002	.002	.06	.090	16.5	46.5	.071	.012	.002	.001	.1	.71	.003	1.36	.52	.529	.348	.00022
standard dev.		*.25*								*.073*								*.31*	*.326*	*.291*	*.00016*
LADNER	11.11	5.08	12.0	.0002	.002	.07	.092	14.0	46.1	.232	.014	.003	.001	.1	.64	.003	1.18	.70	.626	.534	.00028
standard dev.		*.39*								*.372*								*.66*	*.517*	*.615*	*.00035*
VANCOUVER (A)	13.15	4.98	12.9	.0003	.004	.26	.076	16.2	54.5	.211	.023	.009	.002	.1	.57	.005	1.04	1.06	.727	.918	.00038
standard dev.		*.28*								*.335*								*1.25*	*.676*	*1.212*	*.00027*
CLOVERDALE	5.70	5.38	7.7	.0002	.002	.17	.047	11.6	40.8	.353	.047	.004	.004	.1	.24	.002	.56	.85	.803	.786	.00028
standard dev.		*.37*								*.407*								*1.43*	*.922*	*1.399*	*.00015*
ABBOTSFORD	1.93	5.84	6.2	.0002	.002	.04	.022	9.6	35.2	.876	.027	.002	.002	.1	.19	.003	.35	.34	.380	.295	.00021
standard dev.		*.31*								*1.283*								*.46*	*.252*	*.461*	*.00024*
CHILLIWACK	2.07	5.82	6.3	.0005	.001	.04	.026	7.9	34.2	.403	.009	.001	.001	.1	.19	.001	.35	.26	.334	.209	.00017
standard dev.		*.37*								*.463*								*.19*	*.189*	*.179*	*.00019*
AGASSIZ	2.76	5.64	5.5	.0002	.001	.03	.020	8.0	32.2	.404	.012	.002	.001	.1	.19	.001	.36	.28	.367	.229	.00010
standard dev.		*.30*								*.591*								*.36*	*.305*	*.356*	*.00012*

NOTE: ALL FIGURES ARE ARITHMETIC AVERAGES AND ARE NOT VOLUME WEIGHTED.
CONDUCTANCE IS uS/CM, H+, STRONG ACID AND TOTAL ACID ARE GIVEN IN MICRO EQUIVALENTS PER LITRE.
HALF THE LABORATORY DETECTION LIMIT WAS USED FOR THE CALCULATION OF AVERAGES WHEN SUCH VALUES WERE ENCOUNTERED.

Table 1

7.0 ACKNOWLEDGEMENTS

Thanks are extended to F. Mah, I.W.D. Water Quality Lab., A. Percival, Greater Vancouver Regional District, D. Faulkner and S. Nikleva, Atmospheric Environment Service and the sampler operators.

REFERENCES:

Goldberg, E.D., Broecker, W.S., Gross, M.G., and Turekian, K.K., 1971: Marine Chemistry, Oceanography - Contemporary Readings in Ocean Sciences, editor R.G. Pirie. Oxford University Press, New York, London, Toronto.

Inland Waters Directorate, 1979: Analytical Methods Manual 1979, Environment Canada, I.W.D., Water Quality Branch, Ottawa, Canada.

APPENDIX A - DATA LISTINGS

REMARKS : (1) UNKNOWN START OR END TIMES ARE DESIGNATED BY 99. (2) HYDROGEN ION VALUES (H+) ARE COMPUTED FROM THE MEASURED PH. THE AVERAGE PH IS AN ARITHMETIC AVERAGE WHILE THE NUMBER IN PARENTHESES IS THE AVERAGE PH COMPUTED FROM THE H+ VALUES. (3) CONDUCTANCE IS EXPRESSED IN MICRO-SIEMENS/CM., STRONG ACID, TOTAL ACID & H+ ARE EXPRESSED IN MICRO EQUIVALENTS/LITRE. (4) CD, CU, FE, PB, MN & ZN ARE EXTRACTABLE AMOUNTS. (5) MINUS SIGNS FLAG VALUES THAT ARE BELOW DETECTION LIMITS. WHEN THE AVERAGES ARE COMPUTED, 1/2 THE DETECTION LIMIT IS USED AND THE AVERAGE VALUE IS AGAIN FLAGGED WITH A MINUS SIGN. (6) MISSING DATA ARE DESIGNATED BY -.9. (7) THE CATCH AMOUNTS ARE CALCULATED FROM THE SAMPLE VOLUME AND ARE EXPRESSED IN MILLIMETRES OF RAINFALL, WITH A FULL SAMPLER BEING APPROX. 34 MM. (8) .THE ION BALANCE (+/-) IS COMPUTED FROM THE SUM OF H+, CA++, MG++, NH4+, K+ & NA+ DIVIDED BY THE SUM OF CL-, SO4-- & NO3-. VALUES BELOW THE DETECTION LIMITS ARE HANDLED AS ABOVE.

LOWER MAINLAND ACID RAIN STUDY
****
ABBOTSFORD (A), B.C.
****
JAN 82-MAR 83
(VALUES ARE EXPRESSED IN MG PER LITRE)

	PERIOD																											EXCESS		SEA	
EVENT	MO	DY	HR	MO	DY	HR	H+	PH	COND	CD	CU	CA++	MG++	S.ACID	T.ACID	NH4+	FE	PB	MN	K+	NA+	ZN	CL-	SO4--	NO3-	AS	CATCH	SO4	CA	SO4	+/-
4	5	1	29	14	2	1	11	1.82	5.74	6.8	-.0005	.003	.14	.035	-15.0	28.2	.553	.004	.001	.003	-.2	.3	.004	.4	.8	.363	-.9000	-.9	.725	.129	.075	1.715
7	0	2	3	10	2	12	16	.22	6.66	20.2	-.9000	-.900	-.90	-.900	-15.0	2.9	2.019	-.900	-.900	-.900	-.9	-.9	-.900	-.9	-.9	2.259	-.9000	-.9	-.900	-.900	-.900	-.900
8	0	2	12	16	2	13	11	1.58	5.80	2.5	-.0005	.004	.05	.005	-15.0	27.9	.213	.002	.001	-.001	-.2	-.2	-.001	-.2	-.2	.195	-.9000	-.9	.075	.046	.025	2.884
8	0	2	13	11	2	14	22	1.45	5.84	3.1	-.0005	.003	.03	-.005	-15.0	30.4	.296	.005	.002	.004	-.2	-.2	.006	-.2	.2	.213	-.9000	-.9	.175	.026	.025	2.540
8	0	2	14	23	2	15	21	.35	6.45	8.8	-.9000	-.900	.08	.022	-15.0	6.7	.759	-.900	-.900	-.900	.2	.4	-.900	.5	.6	.407	-.9000	-.9	.500	.065	.100	2.134
10	0	2	23	14	2	25	16	.91	6.04	9.1	-.0005	.004	.29	.033	-15.0	36.9	.782	.029	.018	.004	-.2	.3	.008	.5	.7	.996	-.9000	-.9	.625	.279	.075	1.722
11	0	2	26	16	2	27	10	11.48	4.94	8.1	-.9000	-.900	-.90	-.900	-15.0	40.2	.283	-.900	-.900	-.900	-.2	-.2	-.900	.2	.5	.868	-.9000	-.9	.475	-.900	.025	-.900
11	0	2	27	10	3	1	11	.69	6.16	4.1	-.0005	.002	.14	.240	-15.0	28.2	.424	.002	.001	-.001	-.2	-.2	-.001	.2	-.2	.217	-.9000	-.9	.075	.136	.025	5.153
12	0	3	11	13	3	12	13	3.09	5.51	11.9	-.9000	-.900	.19	.073	-15.0	39.3	6.173	-.900	-.900	-.900	-.2	.9	-.900	1.3	1.5	.651	-.9000	-.9	1.274	.156	.226	5.134
13	0	7	20	7	7	22	11	3.89	5.41	7.7	-.9000	-.900	.05	.009	-15.0	32.5	.529	-.900	-.900	-.900	-.2	.3	-.900	.4	1.2	.509	-.9000	-.9	1.125	.039	.075	1.171
14	0	8	10	12	8	13	10	6.92	5.16	9.9	-.0005	.003	.08	.014	-15.0	38.4	2.636	.005	.005	.001	-.2	-.2	.007	.2	1.8	.780	-.9000	-.9	1.775	.076	.025	2.964
15	0	9	3	15	9	7	11	2.88	5.54	10.6	-.9000	-.900	.07	.015	-15.0	46.9	1.034	-.900	-.900	-.900	-.2	-.2	-.900	.2	1.8	1.329	-.9000	-.9	1.775	.066	.025	1.113
16	0	9	24	9	9	27	12	.21	6.67	26.7	-.9000	-.900	-.90	-.900	-15.0	83.4	3.228	-.900	-.900	-.900	-.2	.5	-.900	.7	3.5	3.269	-.9000	5.7	3.374	-.900	.125	-.900
17	0	10	1	13	10	4	13	2.63	5.58	9.1	-.0005	.004	.07	.016	-15.0	48.1	1.029	.007	.007	.003	-.2	-.2	.004	.2	1.8	.695	-.9000	13.0	1.775	.066	.025	1.314
18	0	10	5	10	10	6	12	1.95	5.71	7.8	-.9000	-.900	.07	.026	-15.0	37.8	.611	-.900	-.900	-.900	-.2	.2	-.900	.4	1.0	.726	-.9000	15.0	.950	.062	.050	1.203
19	0	10	21	9	10	22	11	1.17	5.93	7.7	-.0005	-.001	.50	.006	-15.0	27.5	.467	.006	-.001	-.001	-.2	-.2	.002	-.2	-.2	2.409	-.9000	27.3	.075	.496	.025	1.358
20	0	11	3	12	11	4	12	10.00	5.00	10.6	-.0005	.002	.06	.037	-15.0	46.9	.386	.012	.005	-.001	-.2	-.2	.040	.2	.7	1.023	-.9000	26.6	.675	.056	.025	1.208
21	0	12	2	8	12	3	6	1.17	5.93	2.2	-.0005	.002	-.01	-.005	-15.0	32.9	.174	.005	.002	.010	-.2	-.2	.001	-.2	-.2	.159	-.9000	33.9	.075	.001	.025	2.435
22	0	12	15	16	12	16	9	.65	6.19	5.8	-.9000	-.900	.05	.037	-15.0	29.6	1.021	-.900	-.900	-.900	-.2	.4	-.900	.6	-.2	.368	-.9000	12.5	0.000	.035	.100	3.318
23	0	12	20	16	12	21	9	.37	6.43	-.9	-.9000	-.900	-.90	-.900	-.9	-.9	2.546	-.900	-.900	-.900	-.2	1.0	-.900	1.6	.6	1.661	-.9000	2.4	.349	-.900	.251	-.900
24	0	1	7	9	1	7	21	1.62	5.79	3.7	-.0005	.003	.01	.013	-15.0	30.9	.152	.003	.002	-.001	-.2	.2	.007	-.2	-.2	.182	-.9000	32.2	.050	.002	.050	2.918
24	0	1	7	21	1	9	22	1.62	5.79	5.6	-.0005	.002	.02	.030	-15.0	25.9	.199	.002	.002	-.001	-.2	.3	.003	.5	.2	.186	-.9000	34.2	.125	.009	.075	1.492
24	0	1	9	22	1	10	10	1.07	5.97	3.5	-.0005	.002	.01	.015	-15.0	25.9	.089	.001	.002	-.001	-.2	-.2	.004	.3	-.2	.058	-.9000	29.4	.075	.006	.025	1.276
25	0	2	10	10	2	11	9	1.07	5.97	3.5	-.0005	.001	-.01	-.005	-15.0	22.6	.435	.003	-.001	-.001	-.2	-.2	.002	-.2	-.2	.221	-.0001	17.5	.075	.001	.025	3.844
26	0	2	11	9	2	14	11	1.58	5.80	6.5	-.0005	.003	.09	.014	-15.0	44.2	.611	.008	-.001	-.001	-.2	.3	.003	.3	.5	.443	.0005	22.5	.425	.079	.075	2.180
27	0	2	16	16	2	17	12	.66	6.18	4.4	-.9000	-.900	.01	.006	-15.0	33.4	.504	-.900	-.900	-.900	-.2	-.2	-.900	.2	-.2	.186	-.0001	12.2	.075	.006	.025	3.404
28	0	2	22	14	2	23	12	.60	6.22	3.7	-.9000	-.900	.02	.005	-15.0	32.5	.493	-.900	-.900	-.900	-.2	-.2	-.900	-.2	-.2	.221	-.0001	13.4	.075	.016	.025	4.281
29	0	3	5	16	3	7	9	.50	6.30	11.8	-.9000	-.900	.04	.011	-15.0	49.0	2.379	-.900	-.900	-.900	-.2	-.2	-.900	.3	.5	.886	.0008	10.3	.475	.036	.025	4.288
30	0	3	8	9	3	9	11	.85	6.07	3.9	-.0005	.002	.01	.005	-15.0	34.3	2.025	.006	.002	.003	-.2	-.2	.002	-.2	-.2	.186	.0002	19.3	.075	.006	.025	15.303
31	0	3	11	20	3	14	9	5.13	5.29	7.6	-.9000	-.900	-.90	-.900	18.9	-.9	6.173	-.900	-.900	-.900	-.2	.2	-.900	.2	.2	.239	-.9000	11.5	.150	-.900	.050	-.900

LOWER MAINLAND ACID RAIN STUDY
****
ABBOTSFORD (A), B.C.
****
MAR 83-JUN 84
(VALUES ARE EXPRESSED IN MG PER LITRE)

EVENT	PERIOD MO	DY	HR	MO	DY	HR	H+	PH	COND	CD	CU	CA++	MG++	S.ACID	T.ACID	NH4+	FE	PB	MN	K+	NA+	ZN	CL-	SO4--	NO3-	AS	CATCH	EXCESS SO4	EXCESS CA	SEA SO4	+/-
33	0	3	29	9	3	30	10	.91	6.04	6.7	-.9000	-.900	.10	.040	-15.0	32.1	1.286	-.900	-.900	-.900	-.2	.2	-.900	.4	.2	.341	-.9000	13.7	.150	.092	.050	4.380
34	0	6	9	9	6	10	9	8.71	5.06	12.0	-.9000	-.900	.19	.025	-15.0	49.2	.811	-.900	-.900	-.900	-.2	-.2	-.900	.3	2.1	.793	-.9000	8.1	2.075	.186	.025	1.110
36	0	6	16	9	6	17	10	2.88	5.54	4.2	-.0005	-.001	.01	.005	-15.0	25.4	.444	.055	.001	.006	-.2	-.2	-.001	-.2	-.2	.545	-.0001	23.5	.075	.006	.025	2.579
37	0	9	10	3	9	12	10	1.35	5.87	5.6	-.0005	-.001	.02	-.005	-15.0	29.2	.540	.007	.002	-.001	-.2	-.2	-.001	-.2	.3	.332	.0001	19.5	.275	.016	.025	2.732
38	0	10	18	9	10	20	9	1.70	5.77	9.4	-.0005	.003	.07	.024	23.3	46.2	.773	.013	.004	-.001	-.2	-.2	.005	.4	1.2	.824	.0001	18.1	1.175	.066	.025	1.149
39	0	10	21	9	10	24	10	2.45	5.61	6.5	-.0005	.003	.06	.030	17.6	38.4	.450	.020	.003	-.001	-.2	-.2	-.001	.4	.4	.523	.0002	27.6	.375	.056	.025	1.418
40	0	11	1	4	11	2	12	.52	6.28	5.5	-.0005	.003	.02	.022	-15.0	24.3	.514	.110	.001	.003	-.2	-.2	.004	.4	-.2	.275	-.0001	13.0	.075	.016	.025	2.176
41	0	11	2	12	11	3	12	1.10	5.96	4.2	-.0005	-.001	-.01	.017	-15.0	-.9	.296	.020	.001	-.001	-.2	-.2	-.001	.3	-.2	.248	-.0001	19.1	.075	.001	.025	1.792
42	0	11	5	8	11	7	10	3.47	5.46	12.5	-.0005	.002	.05	.100	-15.0	33.0	.604	.004	.003	-.001	-.2	.8	.003	1.8	.6	.536	.0004	11.9	.399	.020	.201	1.182
0	0	11	8	16	11	9	9	-.90	-.90	-.9	-.9000	-.900	-.90	-.900	-.9	-.9	-.900	-.900	-.900	-.900	-.9	-.9	-.900	-.9	-.9	-.900	-.9000	5.0	-.900	-.900	-.900	-.900
0	0	11	9	9	11	10	15	.98	6.01	3.2	-.0005	.002	-.90	-.900	18.7	44.9	.296	.008	.002	-.001	-.2	-.2	-.001	-.2	-.2	.168	-.0001	6.2	.075	-.900	.025	-.900
0	0	11	14	11	11	15	11	1.15	5.94	3.4	-.0005	-.001	.01	-.005	-15.0	39.5	.289	.060	.001	.001	-.2	-.2	.001	-.2	-.2	.208	.0005	30.8	.075	.006	.025	3.001
43	0	11	15	11	11	16	13	1.62	5.79	2.7	-.0005	-.001	-.01	-.005	-15.0	29.6	.217	.002	-.001	-.001	-.2	-.2	-.001	-.2	-.2	.248	.0002	30.9	.075	.001	.025	2.361
44	0	12	7	16	12	9	9	2.82	5.55	11.5	-.0005	.003	.09	.085	-15.0	47.7	.562	.130	.004	.007	-.2	.8	.009	1.3	.5	.886	.0007	11.4	.299	.060	.201	1.349
45	0	1	4	9	1	5	10	.93	6.03	5.3	-.0005	.001	.05	.018	-15.0	48.9	.392	.032	.002	-.001	-.2	.2	.001	.4	-.2	.168	-.0001	16.3	.050	.042	.050	2.358
46	0	1	23	9	1	24	10	1.12	5.95	4.4	-.0005	.001	.01	.008	-15.0	41.7	.467	.005	.001	-.001	-.2	-.2	.001	-.2	.2	.403	.0001	34.2	.175	.006	.025	2.601
46	0	1	24	10	1	25	12	3.02	5.52	2.9	-.0005	.001	.01	.007	-15.0	32.6	.150	.008	.001	-.001	-.2	-.2	-.001	-.2	-.2	.102	-.0001	34.2	.075	.006	.025	2.950
47	0	2	8	16	2	9	13	.59	6.23	8.3	-.9000	-.900	.30	.022	-15.0	36.2	.660	-.900	-.900	-.900	-.2	-.2	-.900	.4	.3	.717	-.9000	4.2	.275	.296	.025	2.092
48	0	2	17	16	2	20	16	.85	6.07	4.1	.0006	.001	.03	.008	-15.0	49.1	.386	.090	.002	.007	-.2	-.2	.011	-.2	.3	.252	-.0001	28.0	.275	.026	.025	2.385
50	0	2	27	8	2	28	15	.33	6.48	9.1	-.0005	.003	.47	.062	-15.0	3.1	.579	.050	.001	.003	-.2	.3	.002	.4	.4	.895	-.0001	6.5	.325	.459	.075	2.250
51	0	2	28	15	3	1	13	1.20	5.92	7.2	-.0005	.002	.10	.039	-15.0	43.8	.514	.015	.003	.001	-.2	.3	.002	.5	.3	.731	.0002	16.7	.225	.089	.075	1.665
52	0	3	16	12	3	20	10	.28	6.55	9.7	-.0005	-.001	.03	.009	-15.0	51.3	.836	.022	.003	-.001	-.2	.3	.003	.6	.7	.664	.0001	21.0	.625	.019	.075	1.528
53	0	3	22	10	3	23	11	2.45	5.61	10.4	-.9000	-.900	.03	.011	-15.0	53.8	.482	-.900	-.900	-.900	-.2	.2	-.900	.3	1.6	1.351	.0010	14.2	1.550	.022	.050	.674
54	0	4	6	16	4	10	11	6.76	5.17	11.9	-.0010	.003	.15	.140	-15.0	51.9	.592	.004	.003	-.010	-.2	.4	.003	.9	1.1	.864	.0008	34.2	1.000	.135	.100	1.262
55	0	5	18	10	5	19	23	1.58	5.80	5.0	-.0010	.002	.11	.010	-15.0	33.7	.341	.020	.001	-.010	-.2	-.2	.001	-.2	.3	.452	.0002	27.1	.275	.106	.025	2.061
56	0	6	28	14	6	29	10	1.48	5.83	3.6	-.0010	.006	-.90	-.900	-15.0	29.2	.341	.007	-.001	-.010	-.2	-.2	.004	-.2	-.2	.359	.0003	23.6	.075	-.900	.025	-.900
AVERAGES								2.15 (5.67)	5.86	7.3	-.0003	-.002	-.08	-.028	-8.4	36.1	.928	.021	-.002	-.002	-.1	-.22	-.004	-.37	-.57	.633	-.0002	19.0	.511	.076	.056	2.571

LOWER MAINLAND ACID RAIN STUDY
****
AGASSIZ CDA , B.C.
****
JAN 82-MAR 83
(VALUES ARE EXPRESSED IN MG PER LITRE)

	PERIOD																										EXCESS		SEA	
EVENT	MO	DY	HR	MO	DY	HR	H+	PH	COND	CD	CU	CA++	MG++	S.ACID	T.ACID	NH4+	FE	PB	MN	K+	NA+	ZN	CL-	SO4--	NO3-	AS	CATCH	SO4	CA	SO4	+/-
1	0	1	15	12	1	18	8	2.24	5.65	4.8	-.0005	.003	.03	.021	-15.0	28.8	.249	.002	-.001	.001	-.2	.2	-.002	.2	.2	.332	-.9000	-.9	.150	.022	.050	2.014
0	0	1	19	9	1	22	8	1.82	5.74	13.3	-.9000	-.900	.22	.072	-15.0	28.5	.885	-.900	-.900	-.900	-.2	.7	-.900	1.3	.8	2.050	-.9000	-.9	.624	.193	.176	1.167
2	0	1	22	16	1	25	8	2.95	5.53	2.5	-.0005	.001	.01	.009	-15.0	22.6	.053	.001	-.001	-.001	-.2	-.2	.001	.2	-.2	.066	-.9000	-.9	.075	.006	.025	1.597
3	0	1	25	8	1	26	8	3.31	5.48	4.3	-.0005	.001	.01	.018	-15.0	29.3	.174	.002	-.001	-.001	-.2	-.2	.001	.2	.2	.244	-.9000	-.9	.175	.006	.025	1.542
4	0	1	29	9	1	29	16	3.80	5.42	5.8	-.9000	-.900	.07	.014	-15.0	33.4	.389	-.900	-.900	-.900	-.2	-.2	-.900	.2	.8	.345	-.9000	-.9	.775	.066	.025	1.166
5	0	1	29	16	2	1	8	1.82	5.74	5.3	-.0005	.005	.08	.017	-15.0	16.0	.386	.001	.001	.003	-.2	-.2	-.001	.2	.5	.456	-.9000	-.9	.475	.076	.025	1.517
7	0	2	11	9	2	12	16	.81	6.09	6.2	-.9000	-.900	.04	.026	-15.0	34.0	.566	-.900	-.900	-.900	-.2	-.2	-.900	.2	.5	.620	-.9000	-.9	.475	.036	.025	1.660
8	0	2	12	16	2	15	12	4.07	5.39	2.5	-.0005	.001	-.01	-.005	-15.0	35.5	.095	.003	.003	-.001	-.2	-.2	.003	-.2	-.2	.173	-.9000	-.9	.075	.001	.025	2.171
9	0	2	16	16	2	17	10	5.01	5.30	5.3	-.0005	.002	.01	-.005	-15.0	36.1	.289	.003	.001	-.001	-.2	-.2	-.001	-.2	.5	.372	-.9000	-.9	.475	.006	.025	1.490
10	0	2	23	14	2	25	16	5.25	5.28	6.0	-.9000	-.900	.02	.005	-15.0	33.5	.376	-.900	-.900	-.900	-.2	-.2	-.900	-.2	.3	1.661	-.9000	-.9	.275	.016	.025	.960
11	0	2	26	16	3	1	8	2.75	5.56	3.5	-.9000	-.900	-.90	-.900	-15.0	32.2	.158	-.900	-.900	-.900	-.2	.2	-.900	.2	3.3	.182	-.9000	-.9	3.250	-.900	.050	-.900
12	0	3	11	15	3	13	13	1.10	5.96	16.0	-.9000	-.900	.35	.150	-15.0	32.8	.874	-.900	-.900	.005	-.2	1.2	-.900	2.0	1.8	1.019	-.9000	-.9	1.499	.304	.301	1.216
13	0	7	20	8	8	23	17	.55	6.26	7.6	-.0005	.016	.02	.007	-15.0	26.0	.874	.008	.004	.020	-.2	-.2	.003	-.2	.9	1.023	-.9000	-.9	.875	.016	.025	1.510
14	0	8	10	13	8	13	9	1.41	5.85	6.5	-.0005	.003	.05	-.005	-15.0	26.1	.312	.002	.003	-.001	-.2	-.2	.005	-.2	1.1	.664	-.9000	-.9	1.075	.046	.025	.777
15	0	9	3	15	9	7	13	18.62	4.73	12.3	-.0005	.004	.06	.011	-15.0	61.8	1.061	.006	.006	.001	-.2	-.2	.008	-.2	1.7	1.191	-.9000	-.9	1.675	.056	.025	1.537
0	0	9	20	99	9	22	99	4.57	5.34	10.1	-.9000	-.900	.16	.024	-15.0	43.2	1.646	-.900	-.900	-.900	-.2	-.2	-.900	-.2	1.4	1.625	-.9000	-.9	1.375	.156	.025	1.937
16	0	9	24	10	9	27	9	3.63	5.44	7.0	-.9000	-.900	.03	.011	-15.0	14.0	.667	-.900	-.900	-.900	-.2	-.2	-.900	-.2	.9	.833	-.9000	15.7	.875	.026	.025	1.426
17	0	10	1	13	10	4	14	15.85	4.80	11.9	-.0005	.003	.07	.022	-15.0	44.4	.756	.004	.005	.002	.2	.2	.003	.3	1.5	.957	-.9000	23.5	1.450	.062	.050	1.395
18	0	10	5	10	10	6	16	6.76	5.17	6.0	-.9000	-.900	.06	.020	-15.0	28.6	.557	-.900	-.900	-.900	-.2	-.2	-.900	-.2	.5	.598	-.9000	10.8	.475	.056	.025	2.150
19	0	10	21	10	10	22	9	2.04	5.69	2.2	-.9000	-.900	-.01	-.005	-15.0	14.9	.126	-.900	-.900	-.900	-.2	-.2	-.900	-.2	-.2	.155	-.9000	13.2	.075	.001	.025	2.214
20	0	11	3	13	11	4	9	8.91	5.05	6.3	-.0005	.001	.01	.018	-15.0	34.9	.062	.006	.002	-.001	-.2	-.2	.040	.2	-.2	.301	-.9000	34.0	.075	.006	.025	1.688
21	0	12	2	9	12	3	8	2.95	5.53	1.4	-.0005	.001	-.01	-.005	-15.0	24.1	.028	.009	.001	-.001	-.2	-.2	-.001	-.2	-.2	.044	-.9000	33.9	.075	.001	.025	2.114
22	0	12	15	16	12	16	9	1.78	5.75	2.7	-.9000	-.900	.02	.008	-15.0	31.3	.130	-.900	-.900	-.900	-.2	-.2	-.900	-.2	-.2	.146	-.9000	9.1	.075	.016	.025	2.418
23	0	12	20	16	12	21	9	3.98	5.40	5.2	-.9000	-.900	.02	.010	-.9	-.9	.189	-.900	-.900	-.900	-.2	.3	-.900	.3	-.2	.686	-.9000	4.8	.025	.009	.075	1.476
24	0	1	7	9	1	7	16	2.88	5.54	2.4	-.0005	.003	.02	-.005	-15.0	30.1	.120	-.001	.001	-.001	-.2	-.2	.002	-.2	.2	.159	-.9000	26.9	.175	.016	.025	1.848
24	0	1	7	16	1	8	16	1.66	5.78	3.9	-.0005	.003	.01	.025	-15.0	28.8	.148	.002	.003	-.001	-.2	.2	.001	.4	.2	.120	-.9000	34.1	.150	.002	.050	1.362
25	0	2	10	10	2	11	9	1.74	5.76	3.7	-.9000	-.900	-.01	.012	-15.0	22.0	.198	-.900	-.900	-.900	-.2	-.2	-.900	.2	-.2	.341	-.0001	10.9	.075	.001	.025	1.577
26	0	2	11	9	2	12	12	.95	6.02	4.0	-.9000	-.900	.01	-.005	-15.0	42.7	.435	-.900	-.900	-.900	-.2	.2	-.900	.2	-.2	.332	-.0001	9.3	.050	.002	.050	2.832
27	0	2	16	16	2	17	14	1.26	5.90	2.9	-.9000	-.900	.01	-.005	-15.0	33.4	.153	-.900	-.900	-.900	-.2	-.2	-.900	-.2	-.2	.128	-.0001	17.2	.075	.006	.025	2.491
30	0	3	8	11	3	9	9	2.34	5.63	2.5	-.0005	-.001	.01	-.005	-15.0	35.8	.069	.020	-.001	.001	-.2	.2	-.001	-.2	-.2	.097	-.0001	23.7	.050	.002	.050	2.804

LOWER MAINLAND ACID RAIN STUDY
****
AGASSIZ CDA , B.C.
****
MAR 83-JUN 84
(VALUES ARE EXPRESSED IN MG PER LITRE)

EVENT	PERIOD MO	DY	HR	MO	DY	HR	H+	PH	COND	CD	CU	CA++	MG++	S.ACID	T.ACID	NH4+	FE	PB	MN	K+	NA+	ZN	CL-	SO4--	NO3-	AS	CATCH	EXCESS SO4	EXCESS CA	SEA SO4	+/-
31	0	3	11	16	3	14	11	5.37	5.27	7.8	-.9000	-.900	.01	.016	-15.0	-.9	.216	-.900	-.900	-.900	-.2	.2	-.900	.2	-.2	.230	-.9000	13.1	.050	.002	.050	2.661
32	0	3	25	16	3	28	8	.36	6.44	10.4	-.9000	-.900	.08	.033	-15.0	37.4	2.636	-.900	-.900	-.900	-.2	.3	-.900	.4	.6	.842	-.9000	7.8	.525	.069	.075	4.519
33	0	3	29	11	3	30	8	2.69	5.57	5.3	-.0005	.001	.07	.042	-15.0	51.2	.216	.008	.006	-.001	-.2	.3	.001	.4	.3	.332	.0001	26.0	.225	.059	.075	1.627
34	6	6	9	9	6	10	9	3.72	5.43	4.4	-.0005	-.001	.03	.007	-15.0	29.5	.868	.002	.001	-.001	-.2	-.2	-.001	-.2	.2	.350	-.0001	33.3	.175	.026	.025	4.815
35	0	6	13	14	6	15	13	3.16	5.50	10.3	-.9000	-.900	.18	.038	-15.0	42.6	.932	-.900	-.900	-.900	-.2	-.2	-.900	.2	1.6	1.364	-.9000	6.7	1.575	.176	.025	1.212
36	0	6	16	9	6	17	12	4.47	5.35	3.3	-.0005	-.001	.01	-.005	-15.0	25.4	.189	.001	-.001	-.001	-.2	-.2	-.001	-.2	-.2	.443	.0001	24.5	.075	.006	.025	1.872
38	0	10	18	16	10	20	9	3.47	5.46	4.2	-.0005	-.001	.03	.005	-15.0	40.2	.256	.050	-.001	.003	-.2	-.2	.001	-.2	.3	.270	.0001	15.5	.275	.026	.025	1.973
39	0	10	21	13	10	24	8	3.89	5.41	5.8	-.0005	.001	.05	.040	16.2	33.3	.190	.008	.001	-.001	-.2	.3	-.001	.5	.3	.310	-.0001	33.6	.225	.039	.075	1.413
40	0	10	31	15	11	2	13	.87	6.06	4.0	-.9000	-.900	.03	.010	-15.0	14.9	.283	-.900	-.900	-.900	-.2	-.2	-.900	-.2	-.2	.412	-.0001	10.4	.075	.026	.025	2.233
41	0	11	2	13	11	3	8	3.72	5.43	13.2	-.0005	.001	.01	.030	-15.0	25.7	.095	.020	.001	.002	-.2	.2	-.001	.4	-.2	.190	-.0001	30.7	.050	.002	.050	1.413
42	0	11	4	17	11	7	8	5.50	5.26	9.4	-.0005	-.001	.03	.090	-15.0	29.6	.260	.007	.001	-.001	-.2	.7	.002	1.4	.4	.407	.0005	28.2	.224	.003	.176	1.137
43	0	11	15	9	11	16	8	2.24	5.65	1.7	-.0005	.002	-.01	-.005	-15.0	28.9	.033	.017	.001	.001	-.2	-.2	-.001	-.2	-.2	.062	-.0001	34.2	.075	.001	.025	1.937
44	0	12	7	16	12	9	9	2.19	5.66	-.9	-.9000	-.900	-.90	-.900	-15.0	28.8	.386	-.900	-.900	-.900	-.9	-.9	-.900	1.7	-.9	.593	-.9000	2.8	-.900	-.900	-.900	-.900
45	0	1	4	9	1	4	16	1.91	5.72	2.5	-.0005	.002	.02	-.005	-15.0	32.3	.104	.021	-.001	-.001	-.2	-.2	.001	.2	-.2	.097	-.0001	27.3	.075	.016	.025	1.699
46	0	1	24	10	1	25	9	2.34	5.63	2.1	-.0005	-.001	.01	-.005	-15.0	38.1	.103	.002	.001	-.001	-.2	-.2	-.001	-.2	-.2	.120	-.0001	34.2	.075	.006	.025	2.291
48	0	2	17	16	2	20	15	1.55	5.81	2.7	-.0005	.004	.01	-.005	-15.0	34.4	.180	.090	.002	.002	-.2	-.2	.001	-.2	.2	.204	-.0001	27.9	.175	.006	.025	1.863
50	0	2	27	11	2	28	14	-.90	-.90	9.1	-.9000	-.900	-.90	-.900	-.9	-.9	.442	-.900	-.900	-.900	.3	.4	-.900	.5	.3	.859	-.9000	2.5	.200	-.900	.100	-.900
51	0	2	28	14	3	1	14	.66	6.18	7.8	-.9000	-.900	.21	.045	-15.0	31.8	.651	-.900	-.900	-.900	-.2	.3	-.900	.3	.5	.837	-.9000	8.2	.425	.199	.075	2.055
52	0	3	16	12	3	19	8	.49	6.31	6.9	-.0005	.002	.02	.007	-15.0	49.2	.482	.007	.003	-.001	-.2	.3	.002	.5	.4	.567	-.0001	29.4	.325	.009	.075	1.406
53	0	3	22	11	3	23	8	3.80	5.42	6.6	-.0005	.001	.01	.005	-15.0	52.0	.247	.018	-.001	-.001	-.2	.2	-.001	.3	.5	.602	.0005	25.1	.450	.002	.050	1.038
54	0	4	6	15	4	9	8	2.40	5.62	9.1	-.0010	-.001	-.90	-.900	-15.0	25.6	.585	.011	.002	-.010	-.2	.3	.003	.8	.4	.974	.0003	19.6	.325	-.900	.075	-.900
54	0	4	9	10	4	10	9	9.77	5.01	5.7	-.0010	-.001	-.90	-.900	-15.0	40.9	.145	.003	.002	-.010	-.2	-.2	.001	.2	.2	.385	.0003	22.1	.175	-.900	.025	-.900
55	0	5	18	8	5	22	7	4.27	5.37	5.2	-.0010	.003	.08	-.010	-15.0	33.7	.193	.050	.003	.010	-.2	-.2	.001	-.2	.2	.118	-.9000	32.5	.175	.076	.025	2.956
0	0	6	26	12	6	27	8	-.90	-.90	-.9	-.9000	-.900	-.90	-.900	-.9	-.9	1.247	-.900	-.900	-.900	-.2	.3	-.900	.3	1.4	1.351	-.9000	3.6	1.325	-.900	.075	-.900
AVERAGES								3.57 (5.45)	5.58	6.0	-.0003	-.002	-.05	-.019	-7.7	32.6	.424	-.012	-.002	-.002	-.1	-.20	-.003	-.31	-.51	.534	-.0001	20.2	.458	.041	.049	1.879

LOWER MAINLAND ACID RAIN STUDY
****
ALTA LAKE , B.C.
****
JAN 82-MAR 82
(VALUES ARE EXPRESSED IN MG PER LITRE)

EVENT	PERIOD MO	DY	HR	MO	DY	HR	H+	PH	COND	CD	CU	CA++	MG++	S.ACID	T.ACID	NH4+	FE	PB	MN	K+	NA+	ZN	CL-	SO4--	NO3-	AS	CATCH	EXCESS SO4	CA	SEA SO4	+/-
4	0	1	28	10	1	30	16	5.25	5.28	5.1	-.0005	.006	.11	.014	-15.0	30.9	.031	.002	.004	.001	-.2	.2	.013	.2	.4	.434	-.9000	-.9	.350	.102	.050	1.186
7	0	2	11	20	2	12	21	14.13	4.85	8.5	-.0005	.006	.03	-.005	16.4	40.1	.021	.001	.001	-.001	-.2	.5	.002	.6	.2	.598	-.9000	-.9	.074	.011	.125	1.344
8	0	2	12	21	2	13	17	8.51	5.07	4.4	-.0005	.003	.02	-.005	-15.0	35.8	.014	.002	.001	-.001	-.2	.2	.001	-.2	-.2	.403	-.9000	-.9	.050	.012	.050	1.907
10	0	2	23	14	2	26	8	7.94	5.10	6.3	-.0005	.003	.02	-.005	-15.0	30.5	.018	-.001	.004	-.001	-.2	.4	.001	.6	-.2	.394	-.9000	-.9	0.000	.005	.100	1.187
11	0	2	26	9	3	1	9	9.33	5.03	8.8	-.0005	.001	.07	-.005	-15.0	34.3	.026	.001	.001	-.001	-.2	.7	-.001	1.1	-.2	.363	-.9000	-.9	0.000	.043	.176	1.219
AVERAGES								9.03 (5.04)	5.07	6.6	-.0002	.004	.05	-.005	-9.3	34.3	.022	-.001	.002	-.001	-.1	.40	-.003	-.52	-.18	.438	-.9000	-.9	.095	.035	.100	1.369

REMARKS : (1) UNKNOWN START OR END TIMES ARE DESIGNATED BY 99. (2) HYDROGEN ION VALUES (H+) ARE COMPUTED FROM THE MEASURED PH. THE AVERAGE PH IS AN ARITHMETIC AVERAGE WHILE THE NUMBER IN PARENTHESES IS THE AVERAGE PH COMPUTED FROM THE H+ VALUES. (3) CONDUCTANCE IS EXPRESSED IN MICRO-SIEMENS/CM., STRONG ACID, TOTAL ACID & H+ ARE EXPRESSED IN MICRO EQUIVALENTS/LITRE. (4) CD, CU, FE, PB, MN & ZN ARE EXTRACTABLE AMOUNTS. (5) MINUS SIGNS FLAG VALUES THAT ARE BELOW DETECTION LIMITS. WHEN THE AVERAGES ARE COMPUTED, 1/2 THE DETECTION LIMIT IS USED AND THE AVERAGE VALUE IS AGAIN FLAGGED WITH A MINUS SIGN. (6) MISSING DATA ARE DESIGNATED BY -.9. (7) THE CATCH AMOUNTS ARE CALCULATED FROM THE SAMPLE VOLUME AND ARE EXPRESSED IN MILLIMETRES OF RAINFALL, WITH A FULL SAMPLER BEING APPROX. 34 MM. (8) THE ION BALANCE (+/-) IS COMPUTED FROM THE SUM OF H+, CA++, MG++, NH4+, K+ & NA+ DIVIDED BY THE SUM OF CL-, SO4-- & NO3-. VALUES BELOW THE DETECTION LIMITS ARE HANDLED AS ABOVE.

LOWER MAINLAND ACID RAIN STUDY
****
BANFIELD , B.C.
****
JAN 83-FEB 84
(VALUES ARE EXPRESSED IN MG PER LITRE)

EVENT	PERIOD MO	DY	HR	MO	DY	HR	H+	PH	COND	CD	CU	CA++	MG++	S.ACID	T.ACID	NH4+	FE	PB	MN	K+	NA+	ZN	CL-	SO4--	NO3-	AS	CATCH	EXCESS SO4	EXCESS CA	SEA SO4	+/-
24	0	1	7	10	1	8	10	4.27	5.37	10.5	.0015	.004	.11	.150	-15.0	40.9	.003	.004	-.001	-.001	-.2	1.3	.010	2.1	.2	.062	-.0001	34.2	0.000	.061	.326	1.264
0	0	1	9	9	1	10	9	2.29	5.64	12.5	-.0005	.001	.07	.210	-15.0	22.1	.009	.037	.004	.020	-.2	1.6	-.001	3.1	.2	.035	-.0001	34.2	0.000	.009	.402	1.038
25	0	2	10	12	2	11	9	3.98	5.40	13.9	-.0005	-.001	.06	.210	-15.0	16.2	.003	.004	.001	-.001	-.2	1.9	.001	3.0	.2	.089	-.0001	34.1	0.000	0.000	.477	1.215
26	0	2	11	9	2	12	12	4.47	5.35	25.1	-.0005	.002	.12	.410	-15.0	22.2	.005	.007	-.001	.002	-.2	3.3	.002	5.6	.8	.164	-.0001	34.3	0.000	0.000	.828	1.075
27	0	2	16	14	2	17	8	3.47	5.46	5.5	-.0005	.001	.11	.064	-15.0	32.6	.004	.004	-.001	-.001	-.2	.7	.001	.9	-.2	.075	-.0001	34.3	0.000	.083	.176	1.655
28	0	2	22	9	2	23	9	3.63	5.44	2.4	-.0005	-.001	-.01	-.005	-15.0	21.2	-.003	.003	.001	-.001	-.2	.2	.001	.2	.2	.031	-.0001	34.2	.150	0.000	.050	1.497
29	0	3	5	17	3	7	9	7.76	5.11	10.3	-.0005	.004	.03	.092	-15.0	41.3	.004	.053	.001	-.001	-.2	.7	.001	1.3	.3	.221	.0004	21.3	.124	.003	.176	1.077
30	0	3	8	9	3	9	9	2.51	5.60	9.6	-.0005	.004	.05	.130	-15.0	38.2	-.003	.007	-.001	-.001	-.2	1.2	.001	1.9	-.2	.018	-.0001	34.1	0.000	.004	.301	1.260
31	0	3	11	15	3	14	9	5.50	5.26	19.0	-.0005	.001	.09	.280	-15.0	62.0	.036	.004	-.001	-.001	-.2	1.3	-.001	4.1	.4	.093	-.0001	33.9	.074	.041	.326	.750
32	0	3	26	9	3	28	9	5.75	5.24	18.4	-.0005	.002	.09	.250	-15.0	51.6	.005	.003	-.001	.001	-.2	2.1	.001	3.8	.5	.093	.0001	34.1	0.000	.010	.527	1.050
33	0	3	29	9	3	30	9	1.70	5.77	21.1	-.0005	.003	.18	.310	-15.0	62.4	.168	.004	-.001	-.001	-.2	2.6	.001	4.5	.6	.106	-.0001	20.3	0.000	.081	.653	1.142
34	0	6	9	9	6	10	9	5.37	5.27	5.4	-.0005	.001	.03	.048	-15.0	31.9	.012	.016	-.001	.002	-.2	.3	-.001	.6	-.2	.146	-.0001	34.0	.025	.019	.075	1.268
35	0	6	13	15	6	15	10	4.07	5.39	3.5	-.9000	-.900	.02	.022	-15.0	31.9	.003	-.900	-.900	-.900	-.2	-.2	-.900	.3	-.2	.124	-.0001	14.7	.075	.016	.025	1.113
36	0	6	16	9	6	17	9	22.91	4.64	-.9	-.9000	-.900	-.90	-.900	-.9	-.9	.032	-.900	-.900	-.900	-.2	.3	-.900	.5	.3	.766	-.9000	3.2	.225	-.900	.075	-.900
0	0	9	2	16	9	7	10	13.49	4.87	18.2	-.0005	-.001	.07	.210	18.1	41.6	.015	.050	-.001	.002	-.2	1.7	-.001	3.9	.6	.244	-.0001	25.8	.173	.005	.427	.883
37	0	9	9	15	9	12	9	4.57	5.34	5.8	-.0005	.002	.05	.090	-15.0	33.9	.006	.001	.001	.004	.2	.5	-.001	.8	.2	.120	.0003	25.7	.074	.031	.125	1.454
38	0	10	18	9	10	20	9	10.72	4.97	11.7	-.0005	.001	.05	.110	15.6	33.6	.021	.007	.001	-.001	-.2	.8	.002	1.7	.3	.239	-.0001	20.4	.099	.020	.201	1.047
39	0	10	21	10	10	24	9	5.50	5.26	10.0	-.0005	.001	.04	.120	-15.0	30.0	.017	.023	-.001	-.001	-.2	.9	-.001	1.9	.2	.120	-.0001	34.2	0.000	.006	.226	1.005
40	0	10	31	17	11	2	10	6.76	5.17	10.5	-.0005	-.001	.05	.120	-15.0	37.1	-.003	.004	.001	-.001	-.2	.9	-.001	1.8	.4	.089	-.0001	34.2	.174	.016	.226	1.006
41	0	11	2	10	11	3	9	4.17	5.38	22.6	-.0005	-.001	.11	.320	-15.0	28.2	-.003	.008	.001	-.001	-.2	2.4	.002	5.0	.4	.071	.0001	34.2	0.000	.019	.602	.950
42	0	11	5	10	11	7	9	6.31	5.20	10.8	-.0005	-.001	.17	.510	-15.0	35.8	-.003	.037	-.001	.001	-.2	4.7	-.001	8.5	1.0	.089	.0001	34.2	0.000	0.000	1.180	1.007
43	0	11	15	8	11	16	8	3.80	5.42	19.5	-.0005	.001	.10	.280	-15.0	39.6	-.003	.004	.001	.001	-.2	2.4	-.001	4.3	.2	.071	-.0001	29.1	0.000	.009	.602	1.097
44	0	12	7	12	12	9	9	3.63	5.44	67.0	-.0005	.001	.34	.960	-15.0	31.6	-.003	.004	.001	-.001	.3	9.1	.001	16.4	2.3	.044	-.0001	34.2	.016	0.000	2.284	.984
45	0	1	4	9	1	5	9	4.07	5.39	7.1	-.9000	-.900	.03	.062	-15.0	39.4	.008	-.900	-.900	-.900	-.2	.5	-.900	1.0	.2	.168	-.0001	14.9	.074	.011	.125	1.010
46	0	1	23	9	1	24	10	2.63	5.58	3.3	-.0005	.002	.01	.025	-15.0	41.1	.008	.002	.001	-.001	-.2	.2	.004	.4	-.2	.035	-.0001	34.2	.050	.002	.050	1.212
46	0	1	24	10	1	25	9	2.51	5.60	8.0	-.0005	.003	.06	.097	-15.0	42.5	.006	.002	.001	-.001	-.2	.9	.007	1.5	-.2	.084	-.0001	34.2	0.000	.026	.226	1.214
47	0	2	8	9	2	9	9	3.89	5.41	11.1	-.0005	.001	.11	.130	-15.0	30.2	.021	.034	-.001	-.001	-.2	1.0	.004	1.9	.2	.195	.0001	16.3	0.000	.072	.251	1.105
48	0	2	17	16	2	20	12	3.72	5.43	6.0	-.9000	.002	-.05	.040	-15.0	43.2	-.003	.019	.002	-.010	-.2	.4	.002	.9	-.2	.027	.0001	34.2	0.000	.010	.100	1.014
49	0	2	23	9	2	24	9	10.00	5.00	7.6	-.0005	-.900	.04	.041	16.3	36.6	.005	-.900	-.900	-.900	-.2	.3	-.900	.6	-.2	.469	-.9000	6.3	.025	.029	.075	1.176
50	0	2	27	8	2	28	14	2.75	5.56	13.5	-.0005	.001	.33	.180	-15.0	40.0	.071	.022	-.001	.002	-.2	1.3	.001	2.3	.5	.811	-.0001	25.8	.174	.281	.326	1.099

LOWER MAINLAND ACID RAIN STUDY
****
BANFIELD , B.C.
****
FEB 84-JUN 84
(VALUES ARE EXPRESSED IN MG PER LITRE)

EVENT	PERIOD MO	DY	HR	MO	DY	HR	H+	PH	COND	CD	CU	CA++	MG++	S.ACID	T.ACID	NH4+	FE	PB	MN	K+	NA+	ZN	CL-	SO4--	NO3-	AS	CATCH	EXCESS SO4	CA	SEA SO4	+/-
51	0	2	28	14	3	1	14	1.51	5.82	12.6	-.0005	.003	.19	.170	-15.0	37.9	.005	.011	-.001	.001	.2	1.4	.002	2.6	.4	.120	-.0001	17.6	.049	.137	.351	1.092
52	0	3	16	9	3	20	9	2.29	5.64	15.1	-.0005	.002	.22	.200	-15.0	75.6	.005	.008	-.001	.001	-.2	1.6	.007	2.8	.4	-.009	-.0001	34.2	0.000	.159	.402	1.169
53	0	3	22	9	3	23	9	2.04	5.69	21.7	-.0010	.002	-.90	-.900	-15.0	48.5	.008	.006	-.001	-.010	-.2	2.6	.004	4.5	.6	.031	.0003	21.1	0.000	-.900	.653	-.900
54	0	4	6	17	4	9	9	7.08	5.15	26.2	-.0010	.002	.15	.370	-15.0	46.2	.005	.005	-.001	-.010	-.2	3.2	.002	5.6	.7	.571	.0002	34.2	0.000	.028	.803	1.029
54	0	4	9	9	4	10	9	3.98	5.40	23.4	-.0010	.001	.13	.330	-15.0	39.8	.021	.004	-.001	-.010	-.2	2.9	.002	5.1	.5	.080	.0001	31.4	0.000	.020	.728	1.077
55	0	5	18	9	5	20	12	6.92	5.16	33.7	-.9000	-.900	-.90	-.900	-15.0	44.5	.130	-.900	-.900	-.900	-.2	4.2	-.900	7.4	1.4	.115	-.9000	5.4	.346	-.900	1.054	-.900
56	0	6	27	15	6	29	9	10.47	4.98	6.8	-.9000	-.900	.09	.040	-15.0	44.3	.008	-.900	-.900	-.900	-.2	.3	-.900	-.9	.2	.403	-.9000	12.5	.125	.079	.075	-.900
AVERAGES								5.42 (5.27)	5.35	14.7	-.0003	-.002	-.10	-.194	-8.3	38.8	-.018	.013	-.001	-.002	-.1	-1.67	-.002	3.13	-.41	-.168	-.0001	26.9	.055	.038	.419	1.122

REMARKS : (1) UNKNOWN START OR END TIMES ARE DESIGNATED BY 99. (2) HYDROGEN ION VALUES (H+) ARE COMPUTED FROM THE MEASURED PH. THE AVERAGE PH IS AN ARITHMETIC AVERAGE WHILE THE NUMBER IN PARENTHESES IS THE AVERAGE PH COMPUTED FROM THE H+ VALUES. (3) CONDUCTANCE IS EXPRESSED IN MICRO-SIEMENS/CM., STRONG ACID, TOTAL ACID & H+ ARE EXPRESSED IN MICRO EQUIVALENTS/LITRE. (4) CD, CU, FE, PB, MN & ZN ARE EXTRACTABLE AMOUNTS. (5) MINUS SIGNS FLAG VALUES THAT ARE BELOW DETECTION LIMITS. WHEN THE AVERAGES ARE COMPUTED, 1/2 THE DETECTION LIMIT IS USED AND THE AVERAGE VALUE IS AGAIN FLAGGED WITH A MINUS SIGN. (6) MISSING DATA ARE DESIGNATED BY -.9. (7) THE CATCH AMOUNTS ARE CALCULATED FROM THE SAMPLE VOLUME AND ARE EXPRESSED IN MILLIMETRES OF RAINFALL, WITH A FULL SAMPLER BEING APPROX. 34 MM. (8) THE ION BALANCE (+/-) IS COMPUTED FROM THE SUM OF H+, CA++, MG++, NH4+, K+ & NA+ DIVIDED BY THE SUM OF CL-, SO4-- & NO3-. VALUES BELOW THE DETECTION LIMITS ARE HANDLED AS ABOVE.

LOWER MAINLAND ACID RAIN STUDY
****
CAPE ST JAMES , B.C.
****
JAN 82-AUG 83
(VALUES ARE EXPRESSED IN MG PER LITRE)

EVENT	PERIOD MO	DY	HR	MO	DY	HR	H+	PH	COND	CD	CU	CA++	MG++	S.ACID	T.ACID	NH4+	FE	PB	MN	K+	NA+	ZN	CL-	SO4--	NO3-	AS	CATCH	EXCESS SO4	EXCESS CA	SEA SO4	+/-
0	0	1	3	99	1	31	99	1.74	5.76	120.6	-.0005	.005	.73	2.300	-15.0	44.0	.076	.005	.003	.002	.6	17.2	.040	31.7	4.7	.089	-.9000	-.9	.383	.076	4.317	1.002
0	0	2	1	99	2	28	99	1.51	5.82	142.0	-.0005	.002	.19	.150	-15.0	51.1	.063	.007	.004	.002	.6	21.0	.060	37.5	5.6	.089	-.9000	-.9	.329	0.000	5.271	.813
0	0	3	1	99	3	31	99	3.09	5.51	266.0	-.0005	.004	2.50	5.000	-15.0	51.7	.005	.001	.004	.002	1.4	39.0	.045	72.5	9.3	.217	-.9000	-.9	0.000	1.018	9.789	1.013
0	0	4	1	99	4	30	99	3.63	5.44	115.0	-.0005	.012	.74	6.000	-15.0	45.1	.050	.010	.011	.002	.6	16.7	.033	30.0	5.0	.195	-.9000	-.9	.808	.105	4.192	1.341
0	0	5	1	99	6	30	99	.63	6.20	176.0	-.0005	.004	1.20	2.600	-15.0	58.4	.643	.006	.004	.004	1.0	26.0	.023	47.5	6.8	.257	-.9000	-.9	.274	.212	6.526	.987
0	0	7	1	99	7	31	99	1.07	5.97	90.8	-.0005	.001	.78	4.500	-15.0	63.3	.868	.005	.002	.001	.7	12.5	.009	23.0	4.0	.288	-.9000	-.9	.863	.305	3.137	1.384
0	0	8	1	99	8	31	99	.60	6.22	50.4	-.0005	.004	.31	.700	-15.0	72.9	1.214	.003	.003	.003	.8	5.8	.008	10.5	2.9	.337	-.9000	-.9	1.444	.090	1.456	1.143
0	0	9	1	99	9	30	99	5.37	5.27	36.8	-.0005	.002	.26	.580	-15.0	58.5	-.003	.001	.001	.002	.2	5.1	.030	9.0	1.9	.009	-.9000	-.9	.620	.066	1.280	.998
0	0	10	1	99	10	31	99	3.02	5.52	78.8	-.0005	.005	.49	1.400	18.3	77.6	.005	.006	.004	.005	.7	11.1	.015	19.7	3.4	.018	-.9000	-.9	.614	.068	2.786	1.027
0	0	11	1	99	11	30	99	2.00	5.70	160.0	-.0005	.002	1.10	3.000	-15.0	45.1	.008	-.001	.003	.004	1.0	24.0	.030	44.5	6.3	-.009	-.9000	-.9	.276	.188	6.024	.991
0	0	12	1	99	12	31	99	1.29	5.89	498.0	-.0005	.001	3.10	10.000	-15.0	42.2	-.003	.002	.009	.003	3.0	80.0	.044	146.0	20.0	.009	-.9000	-.9	0.000	.060	20.080	1.000
0	0	1	1	99	1	31	99	.69	6.16	3426.0	-.0005	.002	3.70	25.000	-15.0	51.3	-.003	.004	.009	.002	3.8	101.0	.027	186.0	23.5	-.009	-.9000	-.9	0.000	0.000	25.351	1.174
0	0	2	1	99	2	28	99	2.29	5.64	308.0	-.0005	.002	1.80	5.600	-15.0	76.8	-.003	.002	.001	.002	1.6	46.0	.013	83.0	13.4	-.009	-.9000	-.9	1.854	.052	11.546	.990
0	0	3	1	99	3	31	99	2.29	5.64	231.0	-.0005	.003	1.30	4.900	-15.0	63.2	.015	.002	.002	.002	1.3	34.5	.009	62.0	8.8	.013	-.9000	-.9	.140	0.000	8.660	1.038
0	0	4	1	99	4	30	99	2.40	5.62	164.0	-.0005	.005	.98	2.800	-15.0	48.0	-.003	.004	-.001	.002	.8	23.5	.005	42.0	5.8	-.009	-.9000	-.9	0.000	.087	5.898	1.014
0	0	5	1	99	5	31	99	.15	6.82	142.0	-.0005	.006	1.30	1.700	-15.0	135.0	6.180	.015	-.001	.001	1.9	14.3	.012	24.0	7.5	.461	-.9000	-.9	3.911	.757	3.589	1.449
0	0	6	1	99	6	30	99	3.98	5.40	28.6	-.0005	.002	.17	.480	-15.0	62.9	-.003	.005	.001	-.900	-.2	3.8	.008	6.6	.9	-.009	-.9000	-.9	0.000	.026	.954	1.073
0	0	7	1	99	7	31	99	.83	6.08	39.0	-.0005	.003	.50	.580	-15.0	144.0	.823	.001	-.001	.003	.4	3.7	.009	6.4	1.3	.086	-.0001	-.9	.371	.359	.929	1.390
0	0	8	1	99	8	31	99	3.16	5.50	32.7	-.0005	.001	.30	.580	22.8	73.0	.041	.011	.001	.003	.2	4.0	.010	7.2	1.1	.031	-.0001	-.9	.096	.148	1.004	1.092
AVERAGES							2.09 (5.68)	5.80	321.4	-.0002	.003	1.13	4.098	-8.9	66.5	-.526	-.005	-.003	.002	-1.1	25.75	.023	46.79	6.96	-.111	-.0001	-.9	.631	.190	6.463	1.101

REMARKS : (1) UNKNOWN START OR END TIMES ARE DESIGNATED BY 99. (2) HYDROGEN ION VALUES (H+) ARE COMPUTED FROM THE MEASURED PH. THE AVERAGE PH IS AN ARITHMETIC AVERAGE WHILE THE NUMBER IN PARENTHESES IS THE AVERAGE PH COMPUTED FROM THE H+ VALUES. (3) CONDUCTANCE IS EXPRESSED IN MICRO-SIEMENS/CM., STRONG ACID, TOTAL ACID & H+ ARE EXPRESSED IN MICRO EQUIVALENTS/LITRE. (4) CD, CU, FE, PB, MN & ZN ARE EXTRACTABLE AMOUNTS. (5) MINUS SIGNS FLAG VALUES THAT ARE BELOW DETECTION LIMITS. WHEN THE AVERAGES ARE COMPUTED, 1/2 THE DETECTION LIMIT IS USED AND THE AVERAGE VALUE IS AGAIN FLAGGED WITH A MINUS SIGN. (6) MISSING DATA ARE DESIGNATED BY -.9. (7) THE CATCH AMOUNTS ARE CALCULATED FROM THE SAMPLE VOLUME AND ARE EXPRESSED IN MILLIMETRES OF RAINFALL, WITH A FULL SAMPLER BEING APPROX. 34 MM. (8) THE ION BALANCE (+/-) IS COMPUTED FROM THE SUM OF H+, CA++, MG++, NH4+, K+ & NA+ DIVIDED BY THE SUM OF CL-, SO4-- & NO3-. VALUES BELOW THE DETECTION LIMITS ARE HANDLED AS ABOVE.

LOWER MAINLAND ACID RAIN STUDY
****
CHILLIWACK , B.C.
****
JAN 82-FEB 83
(VALUES ARE EXPRESSED IN MG PER LITRE)

	PERIOD																												EXCESS		SEA	
EVENT	MO	DY	HR	MO	DY	HR	H+	PH	COND	CD	CU	CA++	MG++	S.ACID	T.ACID	NH4+	FE	PB	MN	K+	NA+	ZN	CL-	SO4--	NO3-	AS	CATCH	SO4	CA	SO4	+/-
1	0	1	15	12	1	17	11	1.41	5.85	3.9	-.0005	.004	.07	.015	-15.0	29.9	.145	.003	.001	.001	-.2	.2	.003	-.2	-.2	.173	-.9000	-.9	.050	.062	.050	3.306
2	0	1	22	16	1	24	11	1.58	5.80	1.8	-.0005	.002	.02	-.005	-15.0	23.0	.053	.001	-.001	-.001	-.2	-.2	.001	-.2	-.2	.071	-.9000	-.9	.075	.016	.025	2.889
3	0	1	25	8	1	26	11	2.09	5.68	3.9	-.0005	.002	.01	.008	-15.0	30.7	.198	-.001	-.001	.007	-.2	-.2	-.001	.2	.2	.208	-.9000	-.9	.175	.006	.025	1.606
4	0	1	29	9	1	30	17	.66	6.18	6.9	-.0005	.002	.23	.030	-15.0	24.7	.476	-.001	-.001	.002	-.2	.2	-.001	.2	.8	.465	-.9000	-.9	.750	.222	.050	1.754
5	0	1	30	17	2	1	9	1.29	5.89	3.3	-.0005	.001	.02	.009	-15.0	24.2	.283	-.001	-.001	-.001	-.2	-.2	-.001	-.2	-.2	.168	-.9000	-.9	.075	.016	.025	3.366
7	8	2	11	11	2	15	9	2.09	5.68	2.6	-.0005	.001	.01	.006	-15.0	28.7	.185	.005	-.001	-.001	-.2	-.2	-.001	-.2	-.2	.190	-.9000	-.9	.075	.006	.025	2.541
9	0	2	16	16	2	17	9	10.00	5.00	6.9	-.0005	.003	.01	-.005	-15.0	37.2	.225	.002	.002	-.001	-.2	-.2	-.001	-.2	.7	.421	-.9000	-.9	.675	.006	.025	1.244
0	0	2	18	8	2	18	17	1.55	5.81	1.8	-.0005	.003	-.01	-.005	-15.0	28.5	.114	.003	-.001	-.001	-.2	-.2	-.001	-.2	-.2	.066	-.9000	-.9	.075	.001	.025	2.553
0	0	2	18	17	2	19	17	1.05	5.98	4.4	-.0005	.002	.01	.015	-15.0	32.2	.386	.001	.002	-.001	-.2	-.2	.001	.3	.2	.217	-.9000	-.9	.175	.006	.025	1.928
10	0	2	23	14	2	25	17	1.32	5.88	5.9	-.0005	.002	.02	.011	-15.0	28.5	.579	.002	.002	-.001	-.2	-.2	.001	.2	.3	.815	-.9000	-.9	.275	.016	.025	1.687
11	0	2	26	9	2	27	8	.28	6.56	6.6	-.0005	.004	.02	.006	-15.0	26.1	.862	.006	-.001	-.001	-.2	-.2	.001	.2	.3	.478	-.9000	-.9	.275	.016	.025	2.881
11	0	2	28	22	3	1	10	1.48	5.83	2.2	-.0005	.003	.01	-.005	-15.0	26.2	.152	.001	-.001	-.001	-.2	-.2	.001	.2	-.2	.155	-.9000	-.9	.075	.006	.025	1.714
0	0	3	10	23	3	11	17	2.04	5.69	9.4	-.9000	-.900	.16	.090	-15.0	35.5	.810	-.900	-.900	.003	-.2	.8	-.900	1.3	.8	.337	-.9000	-.9	.599	.130	.201	1.697
12	0	3	11	17	3	12	23	12.88	4.89	12.5	-.0005	.003	.14	.057	16.3	44.7	.242	.009	.005	.004	-.2	.5	-.001	.8	.9	.864	-.9000	-.9	.775	.121	.125	1.128
0	0	3	12	23	3	14	9	18.20	4.74	14.1	-.0005	.001	.04	.030	21.7	56.3	4.372	.003	.004	-.001	-.2	.3	-.001	.4	1.4	.930	-.9000	-.9	1.325	.029	.075	5.063
13	0	7	20	8	7	22	12	.30	6.53	8.0	-.9000	-.900	.09	.018	-15.0	29.7	.707	-.900	-.900	-.900	-.2	-.2	-.900	.3	.9	.611	-.9000	-.9	.875	.086	.025	1.413
14	0	8	10	13	8	13	12	1.05	5.98	5.6	-.0005	.005	.09	.007	-15.0	24.3	.804	.003	.002	.002	.2	.3	.006	-.2	.9	.447	-.9000	-.9	.825	.079	.075	2.393
15	0	9	3	15	9	7	12	17.78	4.75	11.2	-.9000	-.900	.13	.013	22.9	56.9	.940	-.900	-.900	-.900	-.2	-.2	-.900	-.2	1.6	1.218	-.9000	-.9	1.575	.126	.025	1.512
16	0	9	24	9	9	27	13	1.07	5.97	6.6	-.9000	-.900	.09	.011	-15.0	33.1	.836	-.900	-.900	-.900	-.2	-.2	-.900	-.2	.9	.744	-.9000	15.1	.875	.086	.025	1.780
17	0	10	1	13	10	4	13	11.75	4.93	11.5	-.0005	.004	.10	.017	15.2	49.3	.815	.007	.005	.002	-.2	-.2	.003	.2	1.9	1.107	-.9000	15.0	1.875	.096	.025	1.114
18	0	10	5	10	10	6	16	1.62	5.79	5.9	-.9000	-.900	.06	.020	-15.0	21.2	.477	-.900	-.900	-.900	-.2	-.2	-.900	.2	.6	.620	-.9000	14.2	.575	.056	.025	1.408
19	0	10	21	10	10	22	10	.55	6.26	4.7	-.9000	-.900	.03	.005	-15.0	29.1	.525	-.900	-.900	-.900	.2	.3	-.900	.2	-.2	.195	-.9000	13.3	.025	.019	.075	4.576
20	0	11	3	12	11	4	12	5.01	5.30	5.9	-.0005	-.001	.03	.023	-15.0	34.9	.167	.005	.002	-.001	-.2	.2	.001	.2	.3	.341	-.9000	33.9	.250	.022	.050	1.663
21	0	12	2	10	12	3	10	1.62	5.79	1.7	-.0005	.001	.05	-.005	-15.0	34.5	.085	.024	.001	.001	-.2	-.2	-.001	-.2	-.2	.066	-.9000	34.0	.075	.046	.025	2.672
22	0	12	15	16	12	16	11	1.15	5.94	4.7	-.9000	-.900	.05	.034	-15.0	29.6	.152	-.900	-.900	-.900	-.2	.3	-.900	.6	-.2	.159	-.9000	10.9	.025	.039	.075	1.413
24	0	1	7	10	1	7	22	2.00	5.70	5.5	.0027	.002	.02	-.005	-15.0	8.9	.091	-.001	.001	-.001	-.2	-.2	.002	-.2	-.2	.111	-.9000	34.2	.075	.016	.025	2.264
24	0	1	9	22	1	10	8	2.00	5.70	1.5	-.0005	.001	.02	-.005	-15.0	31.9	.021	.001	-.001	-.001	-.2	-.2	.001	-.2	-.2	.027	-.9000	23.7	.075	.016	.025	2.111
25	0	2	10	15	2	11	10	.72	6.14	4.6	-.9000	-.900	.01	-.005	-15.0	37.9	.660	-.900	-.900	-.900	-.2	-.2	-.900	-.2	-.2	.332	.0001	10.5	.075	.006	.025	4.380
26	0	2	11	10	2	14	12	.44	6.36	17.5	-.0005	.002	.01	.007	-15.0	49.7	.900	.005	-.001	-.001	-.2	-.2	.002	-.2	.3	.332	.0001	16.8	.275	.006	.025	4.043
27	0	2	16	16	2	17	15	2.34	5.63	3.5	-.0005	-.001	.06	.008	-15.0	26.6	.204	.009	.001	-.001	-.2	-.2	.001	-.2	.3	.221	.0002	19.2	.275	.056	.025	1.917

LOWER MAINLAND ACID RAIN STUDY
****
CHILLIWACK , B.C.
****
FEB 83-JUN 84
(VALUES ARE EXPRESSED IN MG PER LITRE)

EVENT	PERIOD MO	DY	HR	MO	DY	HR	H+	PH	COND	CD	CU	CA++	MG++	S.ACID	T.ACID	NH4+	FE	PB	MN	K+	NA+	ZN	CL-	SO4--	NO3-	AS	CATCH	EXCESS SO4	EXCESS CA	SEA SO4	+/-
28	0	2	22	16	2	23	12	.56	6.25	2.6	-.9000	-.900	-.01	-.005	-15.0	32.8	.231	-.900	-.900	-.900	-.2	-.2	-.900	-.2	-.2	.146	-.0001	11.1	.075	.001	.025	2.857
29	0	3	5	16	3	7	10	.29	6.54	9.0	-.9000	-.900	-.90	-.900	-.9	-.9	-.900	-.900	-.900	-.900	-.2	-.2	-.900	.2	.2	-.900	-.0001	3.9	.175	-.900	.025	-.900
30	0	3	8	9	3	9	11	2.14	5.67	3.9	-.0005	.001	.01	.005	-15.0	40.6	.161	.003	.001	.002	-.2	-.2	-.001	-.2	-.2	.146	.0003	22.6	.075	.006	.025	2.602
31	0	3	11	20	3	14	10	1.62	5.79	5.3	-.9000	-.900	.04	.022	-15.0	50.4	.643	-.900	-.900	-.900	-.2	-.2	-.900	.2	.2	.359	-.9000	8.4	.175	.036	.025	3.077
32	0	3	26	12	3	28	13	.60	6.22	9.2	-.9000	-.900	-.90	-.900	-.9	-.9	2.122	-.900	-.900	-.900	-.2	-.2	-.900	.3	.7	.717	-.9000	3.9	.675	-.900	.025	-.900
33	0	3	29	10	3	30	10	3.72	5.43	7.4	-.0005	.002	.07	.045	-15.0	50.6	.279	-.001	.001	-.001	-.2	.2	.001	.5	.4	.487	.0003	26.6	.350	.062	.050	1.243
34	6	6	9	9	6	10	9	7.08	5.15	5.2	-.0005	.001	.07	.014	-15.0	40.7	.246	.011	.001	.002	-.2	-.2	-.001	-.2	.3	.425	-.0001	28.2	.275	.066	.025	2.027
36	6	6	16	9	6	17	11	3.24	5.49	3.0	-.0005	-.001	-.01	-.005	-15.0	29.4	.170	.002	-.001	.001	-.2	-.2	-.001	-.2	-.2	.314	-.0001	31.6	.075	.001	.025	2.009
37	0	9	9	16	9	12	8	1.32	5.88	5.3	-.9000	-.900	.04	.017	-15.0	16.0	.457	-.900	-.900	-.900	-.2	-.2	-.900	-.2	-.2	.332	-.0001	15.3	.075	.036	.025	3.603
38	0	10	18	13	10	20	9	5.50	5.26	7.1	-.0005	.001	.05	.012	-15.0	39.9	.485	.008	-.001	-.001	-.2	-.2	.002	.2	.7	.523	.0005	17.3	.675	.046	.025	1.493
39	0	10	21	9	10	24	11	2.57	5.59	5.9	-.0005	.003	.07	.046	-15.0	38.6	.238	.015	.001	-.001	-.2	.2	-.001	.5	.2	.337	-.0001	27.6	.150	.062	.050	1.447
40	0	10	31	16	11	2	12	.47	6.33	5.1	-.9000	-.900	.06	.017	-15.0	33.6	.257	-.900	-.900	-.900	-.2	-.2	-.900	-.2	.2	.403	-.0001	9.4	.175	.056	.025	1.929
41	0	11	2	12	11	3	13	2.40	5.62	6.6	-.0005	.002	.02	.061	-15.0	35.6	.171	.050	.001	.002	-.2	.4	-.001	.9	.2	.199	-.0001	34.5	.100	.005	.100	1.155
42	0	11	5	8	11	7	11	1.91	5.72	11.7	-.9000	-.900	.05	.120	-15.0	25.9	.476	-.900	-.900	-.900	-.2	.9	-.900	1.9	.4	.452	.0007	15.1	.174	.016	.226	1.190
43	0	11	15	10	11	16	10	.85	6.07	2.2	-.0005	-.001	-.01	-.005	15.6	29.0	.201	.002	.002	-.001	-.2	-.2	-.001	-.2	-.2	.102	-.0001	34.2	.075	.001	.025	2.956
44	0	12	7	13	12	9	9	1.66	5.78	10.3	-.9000	-.900	.12	.100	-15.0	31.9	.041	-.900	-.900	-.900	-.2	.7	-.900	1.5	.5	.717	-.9000	5.2	.324	.093	.176	.796
45	0	1	4	9	1	6	15	1.26	5.90	4.1	-.0005	.002	.04	.007	-15.0	47.3	.341	.007	.002	-.001	-.2	.2	.002	.2	-.2	.168	-.0001	30.8	.050	.032	.050	3.258
46	0	1	23	9	1	24	9	.76	6.12	4.4	-.0005	.002	.02	.005	-15.0	34.6	.482	.003	.001	-.001	-.2	-.2	.001	-.2	.2	.368	-.0001	23.1	.175	.016	.025	2.771
46	0	1	24	9	1	25	13	1.55	5.81	2.1	-.0005	.003	.02	.005	-15.0	26.9	.120	.008	.001	-.001	-.2	-.2	.001	-.2	-.2	.075	-.0001	34.2	.075	.016	.025	2.702
47	0	2	8	14	2	9	10	.26	6.59	-.9	-.9000	-.900	-.90	-.900	-15.0	2.0	.700	-.900	-.900	-.900	.3	.6	-.900	1.1	.3	.629	-.9000	3.1	.149	-.900	.151	-.900
48	0	2	17	17	2	20	16	1.12	5.95	2.8	-.0005	.006	-.01	-.005	-15.0	35.1	.238	.021	.003	.001	-.2	-.2	.030	-.2	-.2	.155	-.0001	34.2	.075	.001	.025	2.929
50	0	2	27	10	2	28	14	-.90	-.90	6.9	-.9000	-.900	.26	.034	-.9	-.9	.667	-.900	-.900	-.900	-.2	.2	-.900	.3	.2	.682	-.9000	3.5	.150	.252	.050	-.900
51	0	2	28	14	3	1	15	1.95	5.71	14.9	-.9000	-.900	.14	.036	15.1	37.2	.444	-.900	-.900	-.900	-.2	-.2	-.900	.3	.4	.895	.0004	10.9	.375	.136	.025	1.391
52	0	3	16	11	3	19	10	.52	6.28	-.9	-.0005	.003	-.90	-.900	-15.0	56.9	.700	.008	.003	-.001	-.2	.2	.002	.4	.7	.802	.0001	18.3	.650	-.900	.050	-.900
53	0	3	22	11	3	23	12	-.90	-.90	-.9	-.9000	-.900	.02	.009	-.9	-.9	.373	-.900	-.900	-.900	-.2	-.2	-.900	.2	.6	.722	.0005	16.0	.575	.016	.025	-.900
54	0	4	6	16	4	10	12	11.48	4.94	9.7	-.0010	.001	.06	.040	18.1	32.1	.418	.011	.003	-.010	-.2	.3	.002	.5	.6	.811	.0007	34.2	.525	.049	.075	1.425
55	0	5	18	10	5	21	15	2.04	5.69	6.5	-.0010	.001	.12	.020	15.0	43.0	.509	.050	.003	-.010	-.2	-.2	.001	-.2	.6	.660	.0004	27.0	.575	.116	.025	1.726
0	0	6	27	14	6	28	12	3.09	5.51	5.9	-.0010	.004	.11	.020	-15.0	44.5	.482	.027	.002	-.010	-.2	-.2	.004	.2	.5	.749	-.9000	18.1	.475	.106	.025	1.559
AVERAGES								2.99 (5.52)	5.78	6.2	-.0003	-.002	-.06	-.020	-9.0	33.9	.493	-.008	-.002	-.001	-.1	-.19	-.002	-.30	-.40	.429	-.0002	19.7	.356	.049	.047	2.218

LOWER MAINLAND ACID RAIN STUDY
****
CLOVERDALE , B.C.
****
FEB 82-FEB 84

(VALUES ARE EXPRESSED IN MG PER LITRE)

EVENT	PERIOD MO	DY	HR	MO	DY	HR	H+	PH	COND	CD	CU	CA++	MG++	S.ACID	T.ACID	NH4+	FE	PB	MN	K+	NA+	ZN	CL-	SO4--	NO3-	AS	CATCH	EXCESS SO4	EXCESS CA	SEA SO4	+/-
8	0	2	12	15	2	15	21	10.00	5.00	6.3	-.0005	.002	.04	.010	-15.0	38.7	.166	.003	.002	-.001	-.2	-.2	-.001	-.2	.5	.469	-.9000	-.9	.475	.036	.025	1.391
9	0	2	16	17	2	17	11	8.32	5.08	8.3	-.9000	-.900	-.90	-.900	-15.0	39.8	.315	-.900	-.900	-.900	-.2	.3	-.900	.5	.7	.319	-.9000	-.9	.625	-.900	.075	-.900
10	0	2	23	14	2	26	10	1.95	5.71	9.7	-.9000	-.900	-.90	-.900	-15.0	36.1	.633	-.900	-.900	-.900	-.2	.3	-.900	.6	.8	1.107	-.9000	-.9	.725	-.900	.075	-.900
11	0	2	26	20	3	1	10	8.32	5.08	6.9	-.9000	-.900	-.90	-.900	-15.0	37.9	.210	-.900	-.900	-.900	-.2	-.2	-.900	.2	.4	.762	-.9000	-.9	.375	-.900	.025	-.900
12	0	3	11	17	3	12	14	3.55	5.45	10.1	-.9000	-.900	.24	.079	-15.0	35.7	.195	-.900	-.900	-.900	-.2	.9	-.900	1.3	.9	.496	-.9000	-.9	.674	.206	.226	1.176
14	0	8	10	19	8	13	10	14.13	4.85	8.1	-.0005	.001	.08	.006	-15.0	43.4	.199	.006	.004	.001	-.2	-.2	.005	-.2	1.1	.456	-.9000	-.9	1.075	.076	.025	1.105
16	0	9	24	9	9	27	12	.69	6.16	17.7	-.9000	-.900	-.90	-.900	-15.0	58.0	1.517	-.900	-.900	-.900	-.2	.2	-.900	.4	3.2	1.661	-.9000	5.3	3.150	-.900	.050	-.900
17	0	10	1	20	10	4	12	3.72	5.43	7.3	-.0005	.002	.15	.029	-15.0	46.1	.482	.004	.007	.002	-.2	.2	.003	.4	1.0	.545	-.9000	16.0	.950	.142	.050	1.261
18	0	10	5	10	10	6	15	8.91	5.05	7.2	-.0005	.001	.14	.017	-15.0	46.7	.271	.004	.005	.003	-.2	-.2	.003	-.2	.9	.660	-.9000	23.8	.875	.136	.025	1.218
19	0	10	21	10	10	22	12	1.38	5.86	5.0	-.0005	.001	.11	.040	-15.0	24.2	.215	.017	.004	.001	-.2	.3	.001	.6	-.2	.195	-.9000	22.7	.025	.099	.075	1.701
20	0	11	3	12	11	4	11	12.02	4.92	13.7	.0011	.003	.19	.044	16.4	51.1	.361	.015	.006	-.001	-.2	.3	.012	.5	1.0	1.302	-.9000	19.8	.925	.179	.075	1.086
22	0	12	15	99	12	16	99	2.69	5.57	6.5	-.9000	-.900	.08	.053	-15.0	31.3	.180	-.900	-.900	-.900	-.2	.5	-.900	.8	.2	.469	-.9000	8.7	.074	.061	.125	1.322
24	0	1	7	11	1	7	22	5.25	5.28	5.0	-.0005	.003	.08	.030	-15.0	25.3	.103	.001	.001	-.001	-.2	-.2	.003	.4	-.2	.213	-.9000	22.6	.075	.076	.025	1.448
24	0	1	8	11	1	10	10	2.14	5.67	5.6	-.0005	.002	.08	.053	-15.0	31.3	.116	.002	.002	-.001	-.2	.3	.002	.8	.2	.120	-.9000	34.2	.125	.069	.075	1.135
29	0	3	5	16	3	7	11	1.86	5.73	7.1	-.9000	-.900	-.90	-.900	-.9	-.9	-.900	-.900	-.900	-.900	-.2	.3	-.900	.5	.2	-.900	.0004	4.9	.125	-.900	.075	-.900
30	0	3	8	9	3	9	10	5.25	5.28	5.7	-.9000	-.900	.04	.030	-15.0	40.0	.116	-.900	-.900	-.900	-.2	.2	-.900	.3	.3	.190	.0002	14.2	.250	.032	.050	1.542
31	0	3	11	20	3	14	13	4.07	5.39	8.5	-.9000	-.900	.13	.065	-15.0	61.4	.255	-.900	-.900	-.900	-.2	.4	-.900	.9	.5	.359	.0004	17.9	.400	.115	.100	1.202
32	0	3	26	12	3	28	11	.68	6.17	12.5	-.9000	-.900	.92	.120	-.9	-.9	.080	-.900	-.900	-.900	.2	.5	-.900	1.0	1.4	.881	-.9000	5.6	1.275	.901	.125	1.226
33	0	3	29	9	3	30	12	3.16	5.50	6.6	-.9000	-.900	.16	.055	-15.0	29.1	.159	-.900	-.900	-.900	-.2	.2	-.900	.6	.4	.416	-.9000	8.6	.350	.152	.050	1.118
34	0	6	9	9	6	13	14	2.29	5.64	-.9	-.9000	-.900	-.90	-.900	-.9	-.9	1.174	-.900	-.900	-.900	-.9	-.9	-.900	-.9	-.9	2.436	-.9000	1.7	-.900	-.900	-.900	-.900
35	0	6	13	14	6	15	10	6.61	5.18	-.9	-.9000	-.900	-.90	-.900	-.9	-.9	1.415	-.900	-.900	-.900	.5	.6	-.900	1.2	5.7	3.432	-.9000	2.2	5.549	-.900	.151	-.900
36	0	6	16	9	6	17	10	14.13	4.85	6.9	-.0005	-.001	.04	.009	19.9	44.2	.174	.003	.002	-.001	-.2	-.2	-.001	-.2	.2	.633	.0001	23.9	.175	.036	.025	1.944
37	0	9	9	16	9	12	10	9.33	5.03	12.5	-.0005	.001	.18	.050	17.8	54.5	.431	.060	.008	.005	-.2	.3	-.001	.5	.7	.731	.0003	24.0	.625	.169	.075	1.530
38	0	10	18	9	10	20	12	8.71	5.06	11.7	-.9000	-.900	.19	.043	16.3	43.8	.571	-.900	-.900	-.900	-.2	-.2	-.900	.6	1.7	.943	.0003	10.0	1.675	.186	.025	.893
39	0	10	21	12	10	24	10	17.78	4.75	11.3	-.0005	.002	.06	.035	25.4	70.8	.219	.014	.005	.003	-.2	-.2	.002	.4	.8	.740	.0005	29.8	.775	.056	.025	1.071
40	0	11	1	15	11	2	11	1.66	5.78	5.9	-.9000	-.900	.06	.050	-15.0	31.3	.222	-.900	-.900	-.900	-.2	.2	-.900	.6	.2	.345	.0001	13.8	.150	.052	.050	1.213
41	0	11	2	11	11	3	11	3.98	5.40	3.8	-.9000	-.900	.03	.015	-15.0	16.1	.105	-.900	-.900	-.900	-.2	-.2	-.900	.2	.2	.288	.0001	13.0	.175	.026	.025	1.345
43	0	11	15	11	11	16	12	4.27	5.37	5.1	-.0005	.004	.18	.050	-15.0	41.4	.154	.200	.004	.012	-.2	-.2	.003	.3	-.2	.319	.0004	20.8	.075	.176	.025	2.091
45	0	1	4	12	1	5	17	1.38	5.86	19.2	-.9000	-.900	.09	.018	17.7	40.4	.392	-.900	-.900	-.900	-.2	.3	-.900	.3	.2	.438	-.9000	6.6	.125	.079	.075	2.270
48	0	2	17	16	2	21	10	4.68	5.33	4.5	.0006	.002	.03	-.005	-15.0	37.5	.246	.060	.005	.005	-.2	-.2	.007	-.2	.3	.341	-.0001	34.2	.275	.026	.025	1.848

LOWER MAINLAND ACID RAIN STUDY
****
CLOVERDALE , B.C.
****
FEB 84-JUN 84
(VALUES ARE EXPRESSED IN MG PER LITRE)

EVENT	PERIOD MO	DY	HR	MO	DY	HR	H+	PH	COND	CD	CU	CA++	MG++	S.ACID	T.ACID	NH4+	FE	PB	MN	K+	NA+	ZN	CL-	SO4--	NO3-	AS	CATCH	EXCESS SO4	EXCESS CA	SEA SO4	+/-
49	0	2	23	15	2	24	13	2.75	5.56	4.1	-.9000	-.900	-.90	-.900	-15.0	32.5	.194	-.900	-.900	-.900	-.2	-.2	-.900	.2	-.2	.562	-.9000	5.4	.075	-.900	.025	-.900
51	0	2	28	18	3	1	11	.65	6.19	12.4	-.9000	-.900	.71	.120	-15.0	52.6	.444	-.900	-.900	-.900	-.2	.4	-.900	.6	.8	1.417	-.9000	7.7	.700	.695	.100	1.604
52	0	3	16	15	3	21	14	.66	6.18	6.2	-.0005	.003	.26	.043	-15.0	51.6	.270	.042	.002	.004	-.2	-.2	.002	.3	.4	.492	.0001	34.2	.375	.256	.025	1.579
53	0	3	22	15	3	23	11	-.90	-.90	-.9	-.9000	-.900	-.90	-.900	-.9	-.9	.315	-.900	-.900	-.900	-.2	.3	-.900	.4	1.8	1.528	-.9000	2.7	1.725	-.900	.075	-.900
54	0	4	6	17	4	10	10	1.86	5.73	10.0	-.0010	.001	.62	.100	-15.0	53.7	.482	.002	.003	-.010	-.2	.4	.004	.8	.8	.673	.0006	26.7	.700	.605	.100	1.751
55	0	5	18	10	5	23	10	12.59	4.90	9.3	-.0010	.003	-.90	-.900	20.0	94.4	.187	.090	.005	.010	-.2	-.2	.004	.3	.6	.824	.0004	34.2	.575	-.900	.025	-.900
56	0	6	28	11	6	29	10	6.17	5.21	4.0	-.0010	.004	-.05	-.010	-15.0	46.5	.098	.028	.002	-.020	-.2	-.2	.004	-.2	.2	.288	.0003	34.2	.175	.021	.025	1.734
AVERAGES								5.49	5.42 (5.26)	8.4	-.0004	-.002	-.18	-.043	-10.0	43.4	.352	.032	.004	-.004	-.1	-.25	-.003	-.47	-.80	.751	-.0003	17.1	.735	.173	.062	1.437

REMARKS : (1) UNKNOWN START OR END TIMES ARE DESIGNATED BY 99. (2) HYDROGEN ION VALUES (H+) ARE COMPUTED FROM THE MEASURED PH. THE AVERAGE PH IS AN ARITHMETIC AVERAGE WHILE THE NUMBER IN PARENTHESES IS THE AVERAGE PH COMPUTED FROM THE H+ VALUES. (3) CONDUCTANCE IS EXPRESSED IN MICRO-SIEMENS/CM., STRONG ACID, TOTAL ACID & H+ ARE EXPRESSED IN MICRO EQUIVALENTS/LITRE. (4) CD, CU, FE, PB, MN & ZN ARE EXTRACTABLE AMOUNTS. (5) MINUS SIGNS FLAG VALUES THAT ARE BELOW DETECTION LIMITS. WHEN THE AVERAGES ARE COMPUTED, 1/2 THE DETECTION LIMIT IS USED AND THE AVERAGE VALUE IS AGAIN FLAGGED WITH A MINUS SIGN. (6) MISSING DATA ARE DESIGNATED BY -.9. (7) THE CATCH AMOUNTS ARE CALCULATED FROM THE SAMPLE VOLUME AND ARE EXPRESSED IN MILLIMETRES OF RAINFALL, WITH A FULL SAMPLER BEING APPROX. 34 MM. (8) THE ION BALANCE (+/-) IS COMPUTED FROM THE SUM OF H+, CA++, MG++, NH4+, K+ & NA+ DIVIDED BY THE SUM OF CL-, SO4-- & NO3-. VALUES BELOW THE DETECTION LIMITS ARE HANDLED AS ABOVE.

LOWER MAINLAND ACID RAIN STUDY
****
GROUSE MTN , B.C.
****
JAN 82-MAR 82
(VALUES ARE EXPRESSED IN MG PER LITRE)

EVENT	PERIOD MO	DY	HR	MO	DY	HR	H+	PH	COND	CD	CU	CA++	MG++	S.ACID	T.ACID	NH4+	FE	PB	MN	K+	NA+	ZN	CL-	SO4--	NO3-	AS	CATCH	EXCESS SO4	CA	SEA SO4	+/-
1	0	1	15	99	1	18	99	4.47	5.35	5.7	-.0005	.003	.02	.033	-15.0	32.2	.068	.002	.001	-.001	-.2	.3	.002	.4	.2	.235	-.9000	-.9	.125	.009	.075	1.433
2	0	1	22	99	1	25	99	7.94	5.10	5.1	-.0005	.003	.01	.029	-15.0	34.8	.054	.003	.001	-.001	-.2	.3	.001	.6	.2	.306	-.9000	-.9	.125	0.000	.075	1.131
3	0	1	25	8	1	26	9	7.94	5.10	8.0	-.0005	.005	.03	.032	-15.0	33.3	.098	.001	.002	-.001	-.2	.4	.006	.6	.5	.368	-.9000	-.9	.400	.015	.100	1.126
4	0	1	29	9	1	29	16	6.61	5.18	5.6	-.0005	.003	.05	.027	-15.0	29.4	.076	.001	.003	.006	-.2	.3	.001	.4	.3	.283	-.9000	-.9	.225	.039	.075	1.410
5	0	1	29	16	2	1	11	10.47	4.98	7.3	-.0005	.003	.05	.026	-15.0	34.9	.071	.003	.004	-.001	-.2	-.2	.003	.3	.5	.421	-.9000	-.9	.475	.046	.025	1.011
7	8	2	11	99	2	15	99	11.22	4.95	6.6	-.0005	.002	.02	-.005	-15.0	36.5	.063	.003	.002	-.001	-.2	-.2	.001	.2	.4	.350	-.9000	-.9	.375	.016	.025	1.164
10	0	2	23	99	2	24	99	17.78	4.75	12.9	-.0005	.005	.08	.022	19.6	46.4	.145	.004	.011	-.001	-.2	.2	.006	.5	.7	.802	-.9000	-.9	.650	.072	.050	1.031
11	0	2	26	16	3	1	9	10.47	4.98	7.2	-.0005	.004	.05	.011	-15.0	36.5	.058	.002	.003	-.001	-.2	-.2	.006	.3	.3	.354	-.9000	-.9	.275	.046	.025	1.175
12	0	3	12	8	3	12	12	6.92	5.16	9.0	-.0005	.005	.18	.050	-15.0	35.1	.076	.002	.001	-.001	-.2	.4	.002	.9	.6	.266	-.9000	-.9	.500	.165	.100	1.048
AVERAGES								9.31 (5.03)	5.06	7.5	-.0002	.004	.05	-.026	-8.8	35.5	.079	.002	.003	-.001	-.1	-.24	.003	.47	.41	.376	-.9000	-.9	.350	.045	.061	1.170

REMARKS : (1) UNKNOWN START OR END TIMES ARE DESIGNATED BY 99. (2) HYDROGEN ION VALUES (H+) ARE COMPUTED FROM THE MEASURED PH. THE AVERAGE PH IS AN ARITHMETIC AVERAGE WHILE THE NUMBER IN PARENTHESES IS THE AVERAGE PH COMPUTED FROM THE H+ VALUES. (3) CONDUCTANCE IS EXPRESSED IN MICRO-SIEMENS/CM., STRONG ACID, TOTAL ACID & H+ ARE EXPRESSED IN MICRO EQUIVALENTS/LITRE. (4) CD, CU, FE, PB, MN & ZN ARE EXTRACTABLE AMOUNTS. (5) MINUS SIGNS FLAG VALUES THAT ARE BELOW DETECTION LIMITS. WHEN THE AVERAGES ARE COMPUTED, 1/2 THE DETECTION LIMIT IS USED AND THE AVERAGE VALUE IS AGAIN FLAGGED WITH A MINUS SIGN. (6) MISSING DATA ARE DESIGNATED BY -.9. (7) THE CATCH AMOUNTS ARE CALCULATED FROM THE SAMPLE VOLUME AND ARE EXPRESSED IN MILLIMETRES OF RAINFALL, WITH A FULL SAMPLER BEING APPROX. 34 MM. (8) THE ION BALANCE (+/-) IS COMPUTED FROM THE SUM OF H+, CA++, MG++, NH4+, K+ & NA+ DIVIDED BY THE SUM OF CL-, SO4-- & NO3-. VALUES BELOW THE DETECTION LIMITS ARE HANDLED AS ABOVE.

LOWER MAINLAND ACID RAIN STUDY
****
JORDAN RIVER , B.C.
****
FEB 83-MAR 84

(VALUES ARE EXPRESSED IN MG PER LITRE)

EVENT	PERIOD MO	DY	HR	MO	DY	HR	H+	PH	COND	CD	CU	CA++	MG++	S.ACID	T.ACID	NH4+	FE	PB	MN	K+	NA+	ZN	CL-	SO4--	NO3-	AS	CATCH	EXCESS SO4	EXCESS CA	SEA SO4	+/-
25	0	2	10	8	2	11	8	3.47	5.46	3.2	-.0005	.002	.07	.025	-15.0	15.3	.010	.001	-.001	-.001	-.2	.3	.005	.3	-.2	.124	-.0001	34.0	.025	.059	.075	2.007
0	0	2	11	8	2	16	17	4.68	5.33	8.2	-.0005	.001	.04	.110	-15.0	36.3	.012	.003	-.001	.002	-.2	.9	.001	1.6	-.2	.093	-.0001	34.2	0.000	.006	.226	1.193
27	0	2	16	17	2	17	7	3.39	5.47	2.5	-.0005	.002	.01	.008	-15.0	40.2	.004	.004	-.001	-.001	-.2	-.2	.003	.2	-.2	.146	-.0001	23.4	.075	.006	.025	1.158
0	0	2	17	7	2	22	17	4.57	5.34	6.6	-.0005	-.001	.04	.077	-15.0	35.9	.013	.006	.001	-.001	-.2	.7	-.001	1.1	-.2	-.009	-.0001	34.2	0.000	.013	.176	1.405
0	0	2	22	17	3	5	16	9.33	5.03	10.5	-.0005	.002	.04	.093	-15.0	56.5	.004	.021	.001	-.001	-.2	.7	.002	1.2	.2	.363	-.0001	34.3	.024	.013	.176	1.190
29	0	3	5	16	3	7	9	13.80	4.86	8.6	-.9000	-.900	-.90	-.900	19.1	55.8	-.900	-.900	-.900	-.900	-.2	.4	-.900	.6	.2	-.900	-.9000	7.2	.100	-.900	.100	-.900
30	0	3	8	9	3	9	9	3.80	5.42	3.5	-.0005	.002	-.01	.012	-15.0	48.5	.004	.001	-.001	.001	-.2	.2	-.001	.2	-.2	.053	-.0001	34.2	.050	0.000	.050	1.926
31	0	3	11	17	3	13	8	11.22	4.95	10.0	-.0005	.001	.03	.090	17.6	64.2	.005	.005	.003	.003	-.2	.7	.002	1.3	.3	.319	.0001	33.6	.124	.003	.176	1.111
31	0	3	13	8	3	14	9	2.88	5.54	13.2	-.0005	.001	.05	.190	-15.0	39.9	-.003	.004	-.001	-.001	-.2	1.6	.001	2.9	.2	.040	-.0001	34.2	0.000	0.000	.402	1.077
32	0	3	26	12	3	28	9	5.89	5.23	9.5	-.9000	-.900	.05	.120	-15.0	62.0	.003	-.900	-.900	-.900	-.2	1.0	-.900	1.7	.3	.013	-.0001	14.3	.049	.012	.251	1.185
33	0	3	29	9	3	30	9	2.24	5.65	19.9	-.9000	-.900	.18	.290	-15.0	41.3	.017	-.900	-.900	-.900	-.2	2.4	-.900	4.4	.6	.159	-.0001	16.0	0.000	.089	.602	1.027
34	0	6	9	9	6	10	9	4.37	5.36	10.3	-.9000	-.900	.06	.110	-15.0	43.3	.063	-.900	-.900	-.900	-.2	1.0	-.900	1.9	.2	.252	-.9000	10.0	0.000	.022	.251	1.067
35	0	6	13	19	6	15	10	7.41	5.13	3.7	-.9000	-.900	-.01	.020	-15.0	31.9	.008	-.900	-.900	-.900	-.2	-.2	-.900	.2	-.2	.159	-.0001	11.1	.075	.001	.025	1.619
36	0	6	16	9	6	17	11	23.99	4.62	9.2	-.9000	-.900	.04	.028	27.2	53.3	.053	-.900	-.900	-.900	-.2	-.2	-.900	.4	.2	.997	-.0001	13.1	.175	.036	.025	1.210
37	0	9	9	16	9	12	8	7.59	5.12	11.6	-.9000	-.900	.08	.170	-15.0	32.4	.050	-.900	-.900	-.900	-.2	1.4	-.900	1.8	.2	.226	-.9000	8.9	0.000	.027	.351	1.567
38	0	10	18	9	10	20	11	8.51	5.07	7.5	-.9000	-.900	.07	.035	-15.0	24.6	.036	-.900	-.900	-.900	-.2	.3	-.900	.5	.2	.399	-.0001	11.1	.125	.059	.075	1.315
39	0	10	21	12	10	22	11	6.61	5.18	7.3	-.0005	-.001	.02	.072	-15.0	28.1	.014	.042	-.001	.001	-.2	.5	-.001	.9	-.2	.190	-.0001	30.2	0.000	.001	.125	1.265
40	0	10	31	18	11	2	10	9.33	5.03	6.2	-.0005	-.001	.02	.029	-15.0	29.0	.027	.070	-.001	.002	-.2	.3	-.001	.5	-.2	.204	-.0001	28.0	.025	.009	.075	1.531
41	0	11	2	10	11	3	12	3.72	5.43	3.4	-.0005	-.001	.01	.024	-15.0	29.2	.009	.020	-.001	-.001	-.2	.2	-.001	.5	-.2	.058	-.0001	34.2	.050	.002	.050	1.048
42	0	11	5	11	11	7	11	4.17	5.38	23.6	-.0005	-.001	.12	.340	-15.0	28.3	.009	.005	.001	-.001	-.2	2.9	.006	5.3	.4	.066	-.0001	34.2	0.000	.310	.728	1.053
43	0	11	15	9	11	16	10	2.88	5.54	9.0	-.0005	-.001	.01	.017	-15.0	21.1	.006	.003	.001	-.001	-.2	-.2	.002	.3	-.2	.084	-.0001	34.2	.075	.006	.025	1.010
45	0	1	4	9	1	5	9	5.25	5.28	5.3	-.9000	-.900	.03	.050	-15.0	37.0	.003	-.900	-.900	-.900	-.2	.5	-.900	.7	.2	.159	-.0001	11.1	.074	.011	.125	1.335
46	0	1	23	9	1	24	9	2.95	5.53	2.3	-.0005	.002	.01	.012	-15.0	38.7	-.003	.015	-.001	-.001	-.2	-.2	-.001	-.2	-.2	.040	-.0001	34.2	.075	.006	.025	2.060
46	0	1	24	9	1	25	9	3.16	5.50	11.9	-.0005	-.001	.07	.180	-15.0	38.3	-.003	.006	-.001	-.001	-.2	1.5	.001	2.7	.2	.058	-.0001	34.2	0.000	.013	.377	1.100
47	0	2	8	9	2	9	9	3.24	5.49	24.8	-.9000	-.900	-.90	-.900	-15.0	43.0	.159	-.900	-.900	-.900	.2	3.1	-.900	5.4	.7	.452	-.9000	5.6	0.000	-.900	.778	-.900
48	0	2	17	16	2	20	9	2.34	5.63	2.6	-.0005	.001	-.01	-.005	-15.0	31.3	.014	.004	.002	-.001	-.2	-.2	-.001	-.2	-.2	.177	-.0001	34.2	.075	.001	.025	1.351
49	0	2	23	8	2	24	9	5.89	5.23	4.7	-.9000	-.900	.06	.019	-15.0	28.1	.130	-.900	-.900	-.900	-.2	-.2	-.900	.2	-.2	.376	-.9000	3.9	.075	.056	.025	1.781
50	0	2	27	9	2	28	14	3.24	5.49	14.9	-.9000	-.900	.14	.200	-15.0	34.5	.103	-.900	-.900	-.900	-.2	1.6	-.900	3.0	.4	.425	-.9000	5.6	0.000	.079	.402	1.047
51	0	2	28	14	3	2	9	4.79	5.32	9.6	-.0005	-.001	.08	.018	-15.0	36.9	.013	.013	-.001	-.001	-.2	.9	-.001	1.7	.2	.177	-.0001	34.1	0.000	.046	.226	.958
AVERAGES								6.02 (5.22)	5.30	9.1	-.0002	-.001	-.05	-.087	-8.9	38.1	-.028	.013	-.001	-.001	-.1	-.82	-.002	-1.44	-.21	-.208	-.0001	23.4	.044	.022	.206	1.318

LOWER MAINLAND ACID RAIN STUDY
****
LADNER , B.C.
****
JAN 82-MAR 83

(VALUES ARE EXPRESSED IN MG PER LITRE)

EVENT	PERIOD MO	DY	HR	MO	DY	HR	H+	PH	COND	CD	CU	CA++	MG++	S.ACID	T.ACID	NH4+	FE	PB	MN	K+	NA+	ZN	CL-	SO4--	NO3-	AS	CATCH	EXCESS SO4	EXCESS CA	SEA SO4	+/-
2	0	1	22	18	1	23	13	10.00	5.00	5.6	-.0005	.002	.06	.005	-15.0	36.2	.033	.005	-.001	-.001	-.2	-.2	.004	-.2	.3	.354	-.9000	-.9	.275	.056	.025	1.499
3	0	1	25	7	1	26	7	10.47	4.98	14.9	-.0005	.004	.06	.140	-15.0	39.8	.126	.001	.002	-.001	-.2	1.2	.001	2.2	.8	.314	-.9000	-.9	.499	.014	.301	1.035
4	5	1	29	9	2	1	7	10.47	4.98	13.5	-.9000	-.900	.20	.110	-15.0	39.4	.197	-.900	-.900	-.900	-.2	.9	-.900	1.5	1.1	.447	-.9000	-.9	.874	.166	.226	1.134
7	0	2	11	7	2	12	16	9.77	5.01	18.2	-.9000	-.900	.69	.130	16.1	51.2	.386	-.900	-.900	-.900	-.2	1.0	-.900	2.0	1.5	1.298	-.9000	-.9	1.249	.652	.251	1.127
8	0	2	12	16	2	13	9	15.49	4.81	12.7	-.0005	.002	.04	.085	19.6	48.6	.080	.001	.003	-.001	-.2	.7	-.001	1.4	.7	.562	-.9000	-.9	.524	.013	.176	.981
8	0	2	13	9	2	13	17	17.38	4.76	8.6	-.0005	.001	.01	-.005	20.0	51.6	.068	.002	.002	-.001	-.2	-.2	-.001	-.2	.8	.372	-.9000	-.9	.775	.006	.025	1.129
8	0	2	13	17	2	14	10	16.98	4.77	8.2	-.0005	.001	.01	.005	21.3	45.2	.044	.002	.002	-.001	-.2	-.2	-.001	-.2	.4	.580	-.9000	-.9	.375	.006	.025	1.329
8	0	2	14	10	2	15	10	11.75	4.93	6.5	-.0005	.002	-.01	.013	15.6	42.5	.073	.004	.006	-.001	-.2	-.2	.003	.2	.4	.310	-.9000	-.9	.375	.001	.025	1.266
9	0	2	16	17	2	17	17	10.47	4.98	-.9	-.9000	-.900	-.90	-.900	-.9	-.9	.306	-.900	-.900	-.900	-.9	-.9	-.900	-.9	-.9	.633	-.9000	-.9	-.900	-.900	-.900	-.900
10	0	2	23	16	2	26	7	14.45	4.84	19.8	-.9000	-.900	.29	.110	18.6	50.2	.472	-.900	-.900	-.900	-.2	1.0	-.900	1.9	1.4	1.404	-.9000	-.9	1.149	.252	.251	1.046
11	0	2	26	16	3	1	7	12.88	4.89	9.4	-.0005	.001	.07	.031	17.6	44.4	.154	.003	.008	-.001	-.2	.3	.002	.4	.5	.762	-.9000	-.9	.425	.059	.075	1.267
12	0	3	11	99	3	12	99	5.25	5.28	21.4	-.9000	-.900	-.90	-.900	-15.0	29.4	.104	-.900	-.900	-.900	-.2	2.2	-.900	4.0	1.5	.824	-.9000	-.9	.948	-.900	.552	-.900
14	0	8	10	13	8	13	7	2.04	5.69	6.6	-.0005	.001	.48	.024	-15.0	31.8	.156	.005	.007	.003	-.2	-.2	.006	.3	1.2	.567	-.9000	-.9	1.175	.476	.025	1.022
15	0	9	3	16	9	7	7	11.75	4.93	10.1	-.9000	-.900	.06	.048	16.8	42.2	.211	-.900	-.900	-.900	-.2	.4	-.900	.7	.9	.655	-.9000	-.9	.800	.045	.100	1.027
0	0	9	9	17	9	11	13	19.95	4.70	12.9	-.0005	-.001	.09	.052	-15.0	55.5	.021	.006	.001	.002	-.2	.4	.002	.8	1.3	.399	-.9000	-.9	1.200	.075	.100	.889
16	0	9	24	7	9	27	7	25.12	4.60	21.9	-.9000	-.900	-.90	-.900	33.7	62.2	.868	-.900	-.900	-.900	-.2	.3	-.900	.5	2.7	2.161	-.9000	5.9	2.625	-.900	.075	-.900
17	0	10	2	1	10	4	16	1.29	5.89	8.4	-.0005	.008	.47	.043	-15.0	19.7	.225	.040	.013	.006	-.2	.4	.009	.7	1.1	.523	-.9000	13.4	1.000	.455	.100	1.188
18	0	10	5	7	10	6	13	17.38	4.76	22.5	-.0005	.001	.19	.240	21.1	53.1	.177	.005	.003	.005	-.2	1.9	.002	3.5	1.4	.744	-.9000	21.2	.923	.118	.477	1.013
20	0	11	3	12	11	4	10	30.20	4.52	31.0	-.9000	-.900	.15	.120	-15.0	69.4	.203	-.900	-.900	-.900	-.2	1.9	-.900	3.4	1.9	1.218	-.9000	15.0	1.423	.078	.477	.929
21	0	12	2	8	12	3	6	12.02	4.92	8.6	-.0005	.002	.02	.055	15.2	40.5	.068	.003	.002	-.001	-.2	.5	-.001	.8	.2	.447	-.9000	33.9	.074	.001	.125	1.344
22	0	12	15	16	12	16	8	4.17	5.38	12.2	-.9000	-.900	.06	.150	-15.0	31.9	.067	-.900	-.900	-.900	-.2	1.3	-.900	1.3	.2	.208	-.9000	14.1	0.000	.011	.326	1.863
23	0	12	20	17	12	21	9	9.12	5.04	5.2	-.9000	-.900	-.90	-.900	-.9	-.9	.154	-.900	-.900	-.900	-.2	.2	-.900	.2	-.9	.731	-.9000	3.9	-.900	-.900	.050	-.900
0	0	1	2	3	1	3	12	17.38	4.76	11.7	-.9000	-.900	.04	.060	21.5	36.8	.179	-.900	-.900	-.900	-.2	.5	-.900	.8	.7	.593	-.9000	16.2	.575	.021	.125	1.253
24	0	1	7	7	1	10	7	4.47	5.35	5.0	-.0005	.002	.03	.035	-15.0	32.3	.075	.001	.002	-.001	-.2	.3	.001	.4	-.2	.204	-.9000	20.5	.025	.019	.075	1.718
25	0	2	10	8	2	11	8	9.55	5.02	8.0	-.0005	.001	.02	.038	-15.0	50.9	.093	.004	.001	-.001	-.2	.4	-.001	.6	.3	.283	.0001	23.5	.200	.005	.100	1.399
26	0	2	11	8	2	12	13	14.13	4.85	12.9	-.9000	-.900	.05	.096	18.2	41.2	.129	-.900	-.900	-.900	-.2	.8	-.900	1.4	.8	.531	.0005	13.1	.599	.020	.201	1.067
27	0	2	16	16	2	17	16	9.55	5.02	6.3	-.0005	.001	.03	.032	-15.0	35.9	.084	.006	.001	-.001	-.2	.3	.014	.5	.2	.306	.0001	22.6	.125	.019	.075	1.463
28	0	2	22	16	2	23	12	2.95	5.53	4.9	-.9000	-.900	.23	.026	-.9	-.9	.116	-.900	-.900	-.900	-.2	-.2	-.900	.3	-.9	.288	.0013	8.4	-.900	.226	.025	-.900
29	0	3	5	16	3	7	7	12.30	4.91	9.9	-.9000	-.900	.11	.022	20.3	78.2	.174	-.900	-.900	-.900	.2	.2	-.900	.5	.5	.833	.0005	8.8	.450	.102	.050	1.135
30	0	3	8	9	3	9	9	5.13	5.29	10.1	-.9000	-.900	.05	.082	-15.0	36.8	.096	-.900	-.900	-.900	-.2	.8	-.900	1.2	.3	.204	.0001	14.8	.099	.020	.201	1.315

LOWER MAINLAND ACID RAIN STUDY
****
LADNER , B.C.
****
MAR 83-JUN 84
(VALUES ARE EXPRESSED IN MG PER LITRE)

EVENT	PERIOD MO	DY	HR	MO	DY	HR	H+	PH	COND	CD	CU	CA++	MG++	S.ACID	T.ACID	NH4+	FE	PB	MN	K+	NA+	ZN	CL-	SO4--	NO3-	AS	CATCH	EXCESS SO4	EXCESS CA	SEA SO4	+/-
31	0	3	11	20	3	14	7	6.17	5.21	16.4	-.9000	-.900	.12	.190	-15.0	60.1	.114	-.900	-.900	-.900	-.2	1.5	-.900	2.8	.6	.283	-.0001	18.7	.224	.063	.377	1.061
32	0	3	26	12	3	28	10	1.17	5.93	31.7	-.9000	-.900	-.90	-.900	-.9	-.9	1.865	-.900	-.900	-.900	.4	2.7	-.900	5.2	2.3	2.657	-.9000	2.5	1.622	-.900	.678	-.900
33	0	3	29	7	3	30	11	7.24	5.14	11.8	-.9000	-.900	.12	.130	-15.0	38.3	.179	-.900	-.900	-.900	-.2	.9	-.900	1.8	.5	.496	-.9000	11.3	.274	.086	.226	1.092
34	0	6	9	9	6	10	9	.72	6.14	17.2	-.9000	-.900	-.90	-.900	-.9	-.9	.412	-.900	-.900	-.900	-.2	.6	-.900	1.1	2.5	1.152	-.9000	3.1	2.349	-.900	.151	-.900
36	0	6	16	7	6	17	8	25.12	4.60	11.0	-.9000	-.900	.10	.014	26.6	55.5	.136	-.900	-.900	-.900	-.2	-.2	-.900	-.2	.9	.855	-.0001	16.0	.875	.096	.025	1.293
37	0	9	9	18	9	12	7	15.14	4.82	8.6	-.9000	-.900	.04	.008	18.7	37.3	.246	-.900	-.900	-.900	-.2	-.2	-.900	-.2	.4	.704	.0002	14.8	.375	.036	.025	1.704
38	0	10	18	7	10	20	7	16.98	4.77	12.8	-.0005	.003	.13	.037	22.7	66.7	.176	.016	.006	.001	-.2	.3	.005	.4	1.3	.624	.0002	10.3	1.225	.119	.075	1.072
39	0	10	21	7	10	24	7	23.99	4.62	17.6	-.0005	.001	.07	.060	29.7	68.4	.163	.011	.004	.001	-.2	.4	-.001	.8	1.4	.651	.0002	17.4	1.300	.055	.100	.987
0	0	10	29	19	10	31	7	22.91	4.64	10.1	-.0005	.001	.03	.007	25.3	41.3	.158	.035	.005	.002	-.2	-.2	-.001	-.2	.4	.784	.0001	27.5	.375	.026	.025	1.708
40	0	10	31	16	11	2	16	8.51	5.07	10.3	-.0005	-.001	.05	.081	-15.0	29.1	.176	.006	.002	.001	-.2	.6	.002	1.2	.3	.394	.0001	20.5	.149	.027	.151	1.207
41	0	11	2	16	11	3	11	9.12	5.04	7.6	-.0005	.001	.02	.039	-15.0	29.9	.067	.009	.001	.001	-.2	.3	.002	.6	.2	.381	.0001	18.0	.125	.009	.075	1.199
42	0	11	5	7	11	7	7	8.51	5.07	15.2	-.0005	.002	.08	.150	-15.0	34.0	.228	.009	.004	.001	-.2	1.3	.001	2.6	.5	.385	.0001	10.3	.174	.031	.326	1.074
43	0	11	15	7	11	16	11	12.59	4.90	14.7	-.0005	.012	.06	.150	-15.0	49.2	.087	.047	.002	.001	-.2	1.3	.001	2.5	.3	.390	.0009	20.2	0.000	.011	.326	1.106
44	0	12	7	16	12	9	9	10.72	4.97	10.2	-.0005	.003	.10	.580	-15.0	53.4	.154	.007	.007	-.001	-.2	.5	.008	.9	.2	.784	.0001	10.6	.074	.081	.125	2.281
45	0	1	4	7	1	5	7	7.08	5.15	3.5	-.0005	.002	.01	.008	-15.0	27.5	.058	.005	.001	-.001	-.2	-.2	.001	.2	-.2	.195	-.0001	11.5	.075	.006	.025	1.689
46	0	1	23	7	1	24	7	10.72	4.97	8.5	-.0005	.004	.02	.050	17.6	51.6	.102	.010	.003	-.001	-.2	.4	.005	.6	.3	.350	-.0001	29.9	.200	.005	.100	1.438
46	0	1	24	7	1	25	11	2.19	5.66	3.9	-.0005	.002	.02	.025	-15.0	40.2	.116	.033	.001	-.001	-.2	.3	-.001	.3	.2	.137	.0001	13.0	.125	.009	.075	1.839
47	0	2	8	17	2	9	11	7.94	5.10	9.4	-.0005	.003	.10	.051	-15.0	39.7	.204	.110	.005	.004	-.2	.3	.002	.7	.4	.447	.0001	8.6	.325	.089	.075	1.248
48	0	2	17	17	2	20	17	5.25	5.28	6.0	.0018	.003	.07	.054	-15.0	44.6	.090	.039	.005	.001	-.2	.3	.001	.6	.2	.301	-.0001	34.2	.125	.059	.075	1.302
49	0	2	23	16	2	24	10	8.13	5.09	9.3	-.9000	-.900	.10	.050	-15.0	43.4	.296	-.900	-.900	-.900	-.2	.5	-.900	.8	.5	.952	-.9000	5.5	.375	.081	.125	1.199
50	0	2	27	7	2	28	17	6.61	5.18	6.6	-.0005	.002	.28	.040	-15.0	49.1	.181	.032	.004	.002	-.2	-.2	.001	.2	.7	.678	.0001	12.2	.675	.276	.025	1.310
51	0	2	28	17	3	1	15	10.96	4.96	14.9	-.9000	-.900	.47	.095	20.3	59.7	.394	-.900	-.900	-.900	-.2	.5	-.900	.6	1.4	2.077	-.9000	5.1	1.275	.451	.125	1.111
53	0	3	22	14	3	23	8	-.90	-.90	-.9	-.9000	-.900	.11	.058	-.9	-.9	.354	-.900	-.900	-.900	-.2	.3	-.900	.5	2.2	1.395	-.9000	4.4	2.125	.099	.075	-.900
54	0	4	6	19	4	10	8	11.22	4.95	21.4	-.0010	.003	-.90	-.900	18.2	49.8	.367	.027	.004	-.010	-.2	1.6	.004	3.2	1.5	.873	.0003	21.2	1.098	-.900	.402	-.900
55	0	5	18	12	5	20	13	12.88	4.89	13.0	-.0010	.004	-.90	-.900	20.1	53.4	.142	.040	.004	-.010	-.2	.5	.002	.8	1.0	1.661	.0005	11.6	.875	-.900	.125	-.900
56	0	6	27	7	6	29	8	13.18	4.88	8.2	-.0010	.004	.10	-.010	17.2	50.7	.098	.021	.005	-.010	-.2	-.2	.003	-.2	.3	.523	.0005	34.2	.275	.096	.025	1.767
AVERAGES								11.25 (4.95)	5.04	12.0	-.0003	-.002	-.12	-.076	-13.7	45.4	.209	.017	-.004	-.002	-.1	-.62	-.003	-1.10	-.83	.694	-.0002	15.3	.669	.098	.156	1.285

LOWER MAINLAND ACID RAIN STUDY
****
MT. SEYMOUR , B.C.
****
JAN 82-MAR 82
(VALUES ARE EXPRESSED IN MG PER LITRE)

EVENT	PERIOD MO	DY	HR	MO	DY	HR	H+	PH	COND	CD	CU	CA++	MG++	S.ACID	T.ACID	NH4+	FE	PB	MN	K+	NA+	ZN	CL-	SO4--	NO3-	AS	CATCH	EXCESS SO4	CA	SEA SO4	+/-
2	0	1	22	99	1	25	99	3.02	5.52	1.9	-.0005	.003	-.01	-.005	-15.0	24.2	.006	.001	.001	-.001	-.2	-.2	-.001	-.2	-.2	.097	-.9000	-.9	.075	.001	.025	1.657
4	0	1	29	13	1	30	15	25.70	4.59	15.8	-.0005	.002	.07	.047	26.3	54.2	.153	.003	.013	.001	-.2	.5	.008	.8	1.2	1.019	-.9000	-.9	1.075	.051	.125	1.029
5	0	1	30	15	1	31	11	5.62	5.25	4.8	-.0005	.003	.03	.022	-15.0	29.0	.073	.001	.010	-.001	-.2	.2	.001	.3	.2	.270	-.9000	-.9	.150	.022	.050	1.427
8	0	2	12	99	2	13	99	19.50	4.71	11.3	-.0005	.003	.03	.014	22.2	52.2	.136	.005	.006	.001	-.2	.2	.002	.3	.8	.748	-.9000	-.9	.750	.022	.050	1.101
8	0	2	13	99	2	14	99	7.41	5.13	3.3	-.0005	.002	-.01	-.005	-15.0	35.2	.005	.002	.001	-.001	-.2	-.2	-.001	-.2	-.2	.093	-.9000	-.9	.075	.001	.025	2.351
8	0	2	14	99	2	15	99	12.88	4.89	11.7	-.9000	-.900	.06	-.005	17.9	53.4	.086	-.900	-.900	-.900	-.2	.7	-.900	.6	.9	.930	-.9000	-.9	.724	.033	.176	1.063
10	0	2	24	12	2	25	12	15.85	4.80	10.9	-.0005	.004	.07	.015	19.0	49.9	.127	.004	.004	-.001	-.2	.2	.006	.3	.5	.540	-.9000	-.9	.450	.062	.050	1.409
12	0	3	12	99	3	13	99	7.94	5.10	18.4	-.0005	.004	.52	.180	-15.0	46.4	.159	.007	.018	.003	-.2	1.3	.007	2.4	1.7	.771	-.9000	-.9	1.374	.471	.326	1.009
AVERAGES								12.24 (4.91)	5.00	9.8	-.0002	.003	-.10	-.036	-14.4	43.1	.093	.003	.008	-.001	-.1	-.41	-.004	-.61	-.69	.559	-.9000	-.9	.584	.083	.104	1.381

REMARKS : (1) UNKNOWN START OR END TIMES ARE DESIGNATED BY 99. (2) HYDROGEN ION VALUES (H+) ARE COMPUTED FROM THE MEASURED PH. THE AVERAGE PH IS AN ARITHMETIC AVERAGE WHILE THE NUMBER IN PARENTHESES IS THE AVERAGE PH COMPUTED FROM THE H+ VALUES. (3) CONDUCTANCE IS EXPRESSED IN MICRO-SIEMENS/CM., STRONG ACID, TOTAL ACID & H+ ARE EXPRESSED IN MICRO EQUIVALENTS/LITRE. (4) CD, CU, FE, PB, MN & ZN ARE EXTRACTABLE AMOUNTS. (5) MINUS SIGNS FLAG VALUES THAT ARE BELOW DETECTION LIMITS. WHEN THE AVERAGES ARE COMPUTED, 1/2 THE DETECTION LIMIT IS USED AND THE AVERAGE VALUE IS AGAIN FLAGGED WITH A MINUS SIGN. (6) MISSING DATA ARE DESIGNATED BY -.9. (7) THE CATCH AMOUNTS ARE CALCULATED FROM THE SAMPLE VOLUME AND ARE EXPRESSED IN MILLIMETRES OF RAINFALL, WITH A FULL SAMPLER BEING APPROX. 34 MM. (8) THE ION BALANCE (+/-) IS COMPUTED FROM THE SUM OF H+, CA++, MG++, NH4+, K+ & NA+ DIVIDED BY THE SUM OF CL-, SO4-- & NO3-. VALUES BELOW THE DETECTION LIMITS ARE HANDLED AS ABOVE.

LOWER MAINLAND ACID RAIN STUDY
****
PENDER I. , B.C.
****
DEC 82-MAR 84

(VALUES ARE EXPRESSED IN MG PER LITRE)

EVENT	PERIOD MO	DY	HR	MO	DY	HR	H+	PH	COND	CD	CU	CA++	MG++	S.ACID	T.ACID	NH4+	FE	PB	MN	K+	NA+	ZN	CL-	SO4--	NO3-	AS	CATCH	EXCESS SO4	EXCESS CA	SEA SO4	+/-
22	0	12	15	16	12	16	11	7.24	5.14	15.3	-.9000	-.900	1.10	.200	-15.0	36.6	.042	-.900	-.900	-.900	-.2	1.9	-.900	3.2	.5	.173	-.9000	15.6	.023	1.028	.477	1.606
23	0	12	20	21	12	21	14	13.49	4.87	-.9	-.9000	-.900	-.90	-.900	-.9	-.9	.098	-.900	-.900	-.900	-.9	-.9	-.900	-.9	-.9	.997	-.9000	1.7	-.900	-.900	-.900	-.900
24	0	1	7	10	1	8	11	3.39	5.47	4.4	-.9000	-.900	.02	.039	-15.0	32.4	.008	-.900	-.900	-.900	-.2	-.2	-.900	.5	.2	.182	-.9000	15.1	.175	.016	.025	.705
25	0	2	10	16	2	11	12	19.50	4.71	14.5	-.9000	-.900	.04	.100	26.4	48.0	.009	-.900	-.900	-.900	-.2	.9	-.900	1.5	.7	.447	.0002	12.9	.474	.006	.226	1.122
26	0	2	11	12	2	12	16	11.75	4.93	9.3	-.9000	-.900	.09	.060	-15.0	39.9	.003	-.900	-.900	-.900	-.2	.5	-.900	.9	.2	.381	.0004	12.6	.074	.071	.125	1.279
27	0	2	16	19	2	17	20	7.94	5.10	9.7	-.9000	-.900	.05	.087	-15.0	44.9	.031	-.900	-.900	-.900	-.2	.7	-.900	1.3	.3	.168	.0001	15.0	.124	.023	.176	1.147
28	0	2	22	20	2	23	12	14.45	4.84	10.2	-.9000	-.900	-.90	-.900	-.9	-.9	-.900	-.900	-.900	-.900	-.2	.3	-.900	.9	1.0	-.900	.0006	4.0	.925	-.900	.075	-.900
29	0	3	5	16	3	7	9	22.91	4.64	15.8	-.9000	-.900	.04	.023	26.8	57.5	.152	-.900	-.900	-.900	-.2	.3	-.900	.3	.8	1.054	.0003	9.5	.725	.029	.075	1.207
30	0	3	8	11	3	9	9	8.71	5.06	11.1	-.9000	-.900	.03	.110	15.3	45.3	.009	-.900	-.900	-.900	-.2	1.1	-.900	1.7	.2	.159	-.9000	14.3	0.000	0.000	.276	1.283
31	0	3	12	4	3	13	14	13.80	4.86	13.1	-.9000	-.900	-.90	-.900	-.9	-.9	.246	-.900	-.900	-.900	-.2	.8	-.900	1.4	.9	.593	-.9000	5.1	.699	-.900	.201	-.900
32	0	3	26	8	3	28	10	6.61	5.18	12.4	-.9000	-.900	.11	.160	-.9	-.9	.633	-.900	-.900	-.900	.3	1.0	-.900	2.1	.3	.496	-.9000	5.7	.049	.072	.251	1.065
33	0	3	29	11	3	30	9	4.79	5.32	12.1	-.9000	-.900	-.90	-.900	-.9	-.9	.076	-.900	-.900	-.900	-.2	1.1	-.900	2.1	.7	.350	-.9000	6.8	.424	-.900	.276	-.900
34	0	6	9	9	6	10	10	8.71	5.06	-.9	-.9000	-.900	-.90	-.900	-.9	-.9	.096	-.900	-.900	-.900	-.9	-.9	-.900	-.9	-.9	.886	-.9000	1.8	-.900	-.900	-.900	-.900
35	0	6	13	23	6	15	11	27.54	4.56	-.9	-.9000	-.900	-.90	-.900	-.9	-.9	.253	-.900	-.900	-.900	-.9	-.9	-.900	-.9	-.9	1.284	-.9000	1.7	-.900	-.900	-.900	-.900
36	0	6	16	10	6	17	11	35.48	4.45	15.0	-.9000	-.900	.04	.014	37.0	64.0	.080	-.900	-.900	-.900	-.2	-.2	-.900	.2	.9	1.174	.0002	12.5	.875	.036	.025	1.154
37	0	9	9	21	9	12	10	22.39	4.65	14.2	-.0005	.003	.03	.070	26.8	53.7	.077	.013	-.001	-.001	-.2	.5	.002	1.0	.7	.523	.0003	16.5	.575	.011	.125	1.137
38	0	10	18	19	10	20	9	9.77	5.01	8.0	-.9000	-.900	.08	.029	16.3	40.9	.067	-.900	-.900	-.900	-.2	-.2	-.900	.5	.4	.465	.0002	5.7	.375	.076	.025	.894
39	0	10	21	11	10	24	12	12.02	4.92	9.0	-.0005	.003	.04	.044	16.2	37.4	.050	.014	.002	.001	-.2	.4	.002	.7	.3	.385	.0001	9.7	.200	.025	.100	1.254
40	0	10	31	22	11	2	15	16.98	4.77	12.0	-.0005	.004	.07	.082	18.3	56.7	.068	.026	.003	.006	-.2	.5	.003	1.1	.5	.407	.0004	9.8	.375	.051	.125	1.152
41	0	11	2	16	11	3	11	8.71	5.06	7.5	-.0005	.001	.01	.055	-15.0	29.4	.008	.009	-.001	-.001	-.2	.3	-.001	.8	.2	.230	-.0001	13.0	.125	0.000	.075	.979
42	0	11	5	12	11	7	10	11.22	4.95	31.0	-.9000	-.900	.20	.410	-15.0	13.3	.040	-.900	-.900	-.900	-.2	3.5	-.900	6.4	1.1	.332	.0001	3.7	.221	.067	.878	1.015
43	0	11	15	9	11	16	10	18.62	4.73	14.7	-.0005	.003	.04	.110	19.7	55.0	.014	.004	.002	-.001	-.2	.9	.001	1.8	.3	.461	.0001	9.1	.074	.006	.226	1.119
44	0	12	7	13	12	9	9	10.96	4.96	9.0	-.0005	-.001	.03	.046	-15.0	46.2	.108	.007	.004	-.001	-.2	.3	.009	.7	.2	.598	-.0001	14.9	.125	.019	.075	1.128
45	0	1	4	9	1	5	12	10.47	4.98	5.2	-.9000	-.900	.02	.019	-15.0	36.6	.032	-.900	-.900	-.900	-.2	.2	-.900	.3	-.2	.310	-.9000	4.3	.050	.012	.050	1.677
46	0	1	23	9	1	25	11	4.27	5.37	4.0	-.0005	.005	.02	.021	-15.0	39.8	.037	.003	.001	-.001	-.2	.3	.002	.2	-.2	.182	-.0001	10.6	.025	.009	.075	2.313
47	0	2	8	23	2	9	16	10.23	4.99	8.5	-.9000	-.900	.08	.020	18.3	47.0	.122	-.900	-.900	-.900	-.2	.2	-.900	.4	.4	.403	-.9000	7.6	.350	.072	.050	1.298
48	0	2	17	21	2	20	11	12.02	4.92	7.7	-.0005	.002	.02	.027	15.7	41.9	.066	.017	.003	.001	-.2	.3	.002	.4	.3	.407	.0001	23.4	.225	.009	.075	1.432
49	0	2	23	14	2	24	13	26.30	4.58	22.1	-.9000	-.900	.10	.140	32.8	52.7	.125	-.900	-.900	-.900	-.2	1.3	-.900	2.1	1.3	1.085	-.9000	3.9	.974	.051	.326	1.049
50	0	2	27	9	2	28	15	18.20	4.74	17.7	-.9000	-.900	.51	.120	24.5	60.0	.184	-.900	-.900	-.900	-.2	.8	-.900	1.1	2.4	1.262	-.9000	4.8	2.199	.480	.201	.997
51	0	2	28	15	3	1	22	-.90	-.90	20.2	-.9000	-.900	-.90	-.900	-.9	-.9	.208	-.900	-.900	-.900	.2	1.3	-.900	2.2	2.1	1.838	-.9000	1.4	1.774	-.900	.326	-.900

LOWER MAINLAND ACID RAIN STUDY
****
PENDER I. , B.C.
****
MAR 84-JUN 84

(VALUES ARE EXPRESSED IN MG PER LITRE)

EVENT	PERIOD MO	DY	HR	MO	DY	HR	H+	PH	COND	CD	CU	CA++	MG++	S.ACID	T.ACID	NH4+	FE	PB	MN	K+	NA+	ZN	CL-	SO4--	NO3-	AS	CATCH	EXCESS SO4	CA	SEA SO4	+/-
52	0	3	16	18	3	20	10	23.99	4.62	21.3	-.0005	-.001	.15	.110	38.8	68.6	.193	.011	.002	.003	-.2	.7	.001	1.5	1.9	1.085	.0002	18.6	1.724	.123	.176	.848
53	0	3	22	10	3	23	10	1.55	5.81	7.6	-.9000	-.900	-.90	-.900	-15.0	39.2	.081	-.900	-.900	-.900	-.2	.2	-.900	-.9	.5	.638	-.9000	3.8	.450	-.900	.050	-.900
54	0	4	6	22	4	10	9	23.99	4.62	23.2	-.9000	-.900	-.90	-.900	24.0	73.9	.046	-.900	-.900	-.900	-.2	2.0	-.900	3.3	1.0	.850	.0002	8.3	.498	-.900	.502	-.900
55	0	5	18	9	5	20	23	35.48	4.45	20.2	-.0010	.002	-.90	-.900	48.3	76.3	.198	.060	.005	-.010	-.2	.3	.006	.4	1.8	.886	.0007	12.3	1.725	-.900	.075	-.900
56	0	6	28	10	6	29	9	11.75	4.93	5.3	-.0010	.006	-.05	-.010	16.2	54.8	.008	.007	-.001	-.010	-.2	-.2	.001	-.2	.2	.350	.0003	34.2	.175	.021	.025	1.644
AVERAGES								14.57	4.92 (4.84)	12.9	-.0003	-.003	-.12	-.084	-18.4	47.9	.084	.016	-.002	-.002	-.1	-.72	-.003	-1.33	-.70	.619	-.0002	10.0	.525	.092	.180	1.220

REMARKS : (1) UNKNOWN START OR END TIMES ARE DESIGNATED BY 99. (2) HYDROGEN ION VALUES (H+) ARE COMPUTED FROM THE MEASURED PH. THE AVERAGE PH IS AN ARITHMETIC AVERAGE WHILE THE NUMBER IN PARENTHESES IS THE AVERAGE PH COMPUTED FROM THE H+ VALUES. (3) CONDUCTANCE IS EXPRESSED IN MICRO-SIEMENS/CM., STRONG ACID, TOTAL ACID & H+ ARE EXPRESSED IN MICRO EQUIVALENTS/LITRE. (4) CD, CU, FE, PB, MN & ZN ARE EXTRACTABLE AMOUNTS. (5) MINUS SIGNS FLAG VALUES THAT ARE BELOW DETECTION LIMITS. WHEN THE AVERAGES ARE COMPUTED, 1/2 THE DETECTION LIMIT IS USED AND THE AVERAGE VALUE IS AGAIN FLAGGED WITH A MINUS SIGN. (6) MISSING DATA ARE DESIGNATED BY -.9. (7) THE CATCH AMOUNTS ARE CALCULATED FROM THE SAMPLE VOLUME AND ARE EXPRESSED IN MILLIMETRES OF RAINFALL, WITH A FULL SAMPLER BEING APPROX. 34 MM. (8) THE ION BALANCE (+/-) IS COMPUTED FROM THE SUM OF H+, CA++, MG++, NH4+, K+ & NA+ DIVIDED BY THE SUM OF CL-, SO4-- & NO3-. VALUES BELOW THE DETECTION LIMITS ARE HANDLED AS ABOVE.

LOWER MAINLAND ACID RAIN STUDY
****
PORT HARDY , B.C.
****
JAN 82-APR 82
(VALUES ARE EXPRESSED IN MG PER LITRE)

PERIOD EVENT	NO	DY	HR	NO	DY	HR	H+	PH	COND	CD	CU	CA++	MG++	S.ACID	T.ACID	NH4+	FE	PB	MN	K+	NA+	ZN	CL-	SO4--	NO3-	AS	CATCH	EXCESS SO4	EXCESS CA	SEA SO4	+/-
0	0	1	15 10	1	16	10	3.16	5.50	9.5	-.0005	.004	.05	.110	-15.0	28.8	.039	.003	-.001	-.001	-.2	1.0	.004	1.8	.2	.239	-.9000	-.9	0.000	.012	.251	1.070
0	0	1	16 10	1	17	99	3.47	5.46	14.0	-.0005	.002	.07	.230	-15.0	28.3	.017	-.001	-.001	-.001	-.2	1.8	.001	3.3	.4	.666	-.9000	-.9	0.000	.002	.452	1.051
0	0	1	19 10	1	23	9	12.02	4.92	25.8	-.0005	.002	.13	.350	-15.0	39.5	.040	.005	.003	-.001	-.2	2.8	.003	5.3	1.3	.381	-.9000	-.9	.597	.024	.703	.952
0	0	1	23 9	1	24	99	5.25	5.28	15.7	-.0005	.002	.07	.240	-15.0	30.3	.012	-.001	-.001	-.001	-.2	1.9	-.001	3.6	.5	.058	-.9000	-.9	.023	0.000	.477	1.013
0	0	1	24 99	1	26	99	4.27	5.37	26.4	-.0005	.002	.13	.440	-15.0	28.7	.035	.001	-.001	-.001	-.2	3.5	.001	6.5	1.0	.146	-.9000	-.9	.122	0.000	.878	.986
0	0	1	26 99	1	28	99	5.01	5.30	32.2	-.9000	-.900	.15	.500	-15.0	29.4	.022	-.900	-.900	-.900	-.2	4.4	-.900	7.8	1.2	.137	-.9000	-.9	.096	0.000	1.104	1.006
0	0	1	28 99	1	29	99	5.25	5.28	7.4	-.0005	.001	.05	.075	-15.0	31.6	.021	.001	-.001	-.001	-.2	.7	-.001	1.2	.3	.120	-.9000	-.9	.124	.023	.176	1.144
0	0	1	29 99	1	30	99	3.39	5.47	4.7	-.0005	.003	.06	.045	-15.0	25.3	.027	-.001	-.001	-.001	-.2	.4	-.001	.6	.2	.084	-.9000	-.9	.100	.045	.100	1.405
0	0	1	30 99	1	31	99	2.75	5.56	7.1	-.0005	.002	.07	.082	-15.0	27.5	.015	.001	-.001	.002	-.2	.7	-.001	1.2	.2	.062	-.9000	-.9	.024	.043	.176	1.200
0	0	1	31 99	2	1	99	3.98	5.40	4.6	-.0005	.001	.02	.042	-15.0	26.8	.006	.001	-.001	-.001	-.2	.3	-.001	.6	-.2	.049	-.9000	-.9	.025	.009	.075	1.231
0	0	2	1 99	2	5	10	8.13	5.09	7.6	-.0005	.003	.05	.032	-15.0	35.6	.075	.007	.003	.001	-.2	.3	-.001	.7	.7	.248	-.9000	-.9	.625	.039	.075	.862
0	0	2	5 10	2	11	21	13.49	4.87	13.3	-.0005	.002	.07	.130	15.7	43.5	.037	.005	.003	-.001	-.2	.9	.001	1.8	.8	.279	-.9000	-.9	.574	.036	.226	.993
0	0	2	11 21	2	12	99	5.01	5.30	5.9	-.0005	.001	.01	.050	-15.0	31.8	.009	.001	-.001	-.001	-.2	.4	-.001	.8	.2	.044	-.9000	-.9	.100	0.000	.100	1.096
0	0	2	12 99	2	13	99	7.59	5.12	11.4	-.0005	.002	.04	.110	-15.0	36.6	.362	.010	.002	-.001	-.2	.9	-.001	2.0	.6	.217	-.9000	-.9	.374	.006	.226	.881
0	0	2	15 9	2	16	23	4.47	5.35	3.2	-.0005	.002	.03	.010	-15.0	30.7	.015	.001	-.001	-.001	-.2	-.2	-.001	.2	-.2	.058	-.9000	-.9	.075	.026	.025	1.678
0	0	2	16 23	2	17	17	5.50	5.26	5.6	-.0005	.002	.01	.040	-15.0	28.7	.013	-.001	.003	-.001	-.2	.4	-.001	.7	-.2	.071	-.9000	-.9	0.000	0.000	.100	1.304
0	0	2	17 17	2	19	9	3.72	5.43	25.6	-.0005	.001	.13	2.400	-15.0	27.8	.010	.001	-.001	-.001	.2	3.4	-.001	6.1	.9	.035	-.9000	-.9	.047	.001	.053	1.887
0	0	2	19 10	2	20	9	4.07	5.39	4.5	-.0005	.003	-.01	.032	-15.0	13.3	.019	.001	-.001	-.001	-.2	.4	-.001	.6	-.2	.044	-.9000	-.9	0.000	0.000	.100	1.419
0	0	2	20 9	2	24	11	3.55	5.45	12.1	-.0005	.003	.07	.300	-15.0	33.5	.180	-.001	.001	-.001	-.2	1.3	.004	2.2	.6	.106	-.9000	-.9	.274	.021	.326	1.322
0	0	2	24 11	2	25	9	4.27	5.37	20.4	-.0005	.003	.10	.590	-15.0	28.8	.050	-.001	.001	.002	-.2	2.5	-.001	4.6	.8	.115	-.9000	-.9	.173	.005	.627	1.159
0	0	2	25 9	2	26	9	5.01	5.30	14.1	-.0005	.001	.06	.400	-15.0	28.7	.021	-.001	-.001	.007	-.2	1.6	-.001	3.0	.5	.151	-.9000	-.9	.098	0.000	.402	1.172
0	0	2	26 9	3	1	9	4.68	5.33	17.9	-.0005	.003	.09	.520	-15.0	29.1	.042	.001	-.001	-.001	-.2	2.1	-.001	3.9	.7	.151	-.9000	-.9	.173	.010	.527	1.167
0	0	3	1 9	3	11	9	.42	6.38	33.4	-.0005	.002	.28	.280	-15.0	4.7	-.900	.022	.003	.010	.7	3.1	.005	5.5	3.0	.235	-.9000	-.9	2.222	.162	.778	-.900
0	0	3	11 9	3	12	9	7.08	5.15	14.1	-.0005	.002	.06	.073	-15.0	36.1	.015	.002	.002	.008	-.2	1.5	.002	2.6	.6	.089	-.9000	-.9	.224	.003	.377	.971
0	0	3	12 9	3	15	9	7.94	5.10	26.3	-.0005	.001	.13	.140	-15.0	34.2	.039	.004	.002	.001	-.2	3.3	.004	5.9	1.1	.089	-.9000	-.9	.272	.005	.828	.913
0	0	3	24 9	3	26	12	3.09	5.51	11.4	-.0005	.003	.27	.120	-15.0	38.9	.024	.034	.005	.006	.6	.8	.001	1.5	1.6	.505	-.9000	-.9	1.399	.240	.201	.930
0	0	3	26 12	4	2	99	12.88	4.89	12.3	-.0005	.005	.09	.100	16.2	47.2	.051	.060	.004	.005	-.2	.8	.003	1.5	.9	.474	-.9000	-.9	.699	.060	.201	.958
0	0	4	2 99	4	9	6	22.39	4.65	13.5	-.9000	-.900	.06	.047	24.5	63.4	.120	-.900	-.900	-.900	-.2	.4	-.900	.7	1.3	.664	-.9000	-.9	1.200	.045	.100	.971
0	0	4	9 8	4	12	8	4.07	5.39	5.7	-.0005	.004	.09	.056	-15.0	32.5	.044	.009	.001	.009	-.2	.3	-.001	.7	.5	.102	-.9000	-.9	.425	.079	.075	.982
0	0	4	12 8	4	13	11	6.03	5.22	7.2	-.0005	.003	.04	.072	-15.0	31.8	.022	.017	.002	.001	-.2	.6	-.001	1.1	.4	.080	-.9000	-.9	.249	.017	.151	1.078

LOWER MAINLAND ACID RAIN STUDY
****
PORT HARDY , B.C.
****
APR 82-DEC 82
(VALUES ARE EXPRESSED IN MG PER LITRE)

PERIOD EVENT	MO	DY	HR	MO	DY	HR	H+	PH	COND	CD	CU	CA++	MG++	S.ACID	T.ACID	NH4+	FE	PB	MN	K+	NA+	ZN	CL-	SO4--	NO3-	AS	CATCH	EXCESS SO4	EXCESS CA	SEA SO4	+/-
0	0	4	13	11	4	15	11	4.79	5.32	3.4	-.0005	.003	.02	.013	-15.0	29.4	.018	.025	-.001	.001	-.2	-.2	.003	.3	.3	.080	-.9000	-.9	.275	.016	.025	.923
0	0	4	15	11	4	17	11	8.51	5.07	7.3	-.0005	.004	.04	.057	-15.0	35.4	.026	.005	-.001	.001	-.2	.5	.001	.9	.6	.089	-.9000	-.9	.475	.021	.125	1.042
0	0	4	17	10	4	25	15	16.98	4.77	26.6	-.0005	.003	.20	1.800	20.3	56.2	.084	.016	.002	.003	-.2	2.3	.004	4.2	2.1	.319	-.9000	-.9	1.523	.113	.577	1.687
0	0	4	25	99	4	29	99	3.72	5.43	10.7	-.0005	.003	.19	.150	-15.0	42.9	.014	.017	.003	-.001	-.2	1.3	.001	2.2	.7	.151	-.9000	-.9	.374	.141	.326	1.080
0	0	4	29	99	5	5	99	10.96	4.96	12.1	-.0005	.003	.10	.120	20.0	58.4	.032	.010	.003	.004	-.2	.9	.001	1.6	1.0	.213	-.9000	-.9	.774	.066	.226	.999
0	0	5	5	99	5	12	99	10.00	5.00	11.6	-.0005	.003	.16	.140	17.2	32.3	.283	.006	.001	.005	-.2	1.0	.002	1.9	1.0	.337	-.9000	-.9	.749	.122	.251	1.143
0	0	5	12	8	5	23	16	.59	6.23	12.5	-.0005	.001	.32	.180	-15.0	62.6	.563	.025	.004	.008	-.2	.6	.005	1.3	2.1	.385	-.9000	-.9	1.949	.297	.151	1.053
0	0	6	25	99	7	3	99	2.04	5.69	5.4	-.0005	-.001	.09	.031	-15.0	38.9	.197	.020	-.001	.004	.2	.3	.001	.4	.7	.328	-.9000	-.9	.625	.079	.075	1.225
0	0	7	5	11	7	7	15	.69	6.16	3.0	-.0005	-.001	.04	.011	-15.0	25.4	.006	.080	-.001	.003	-.2	-.2	-.001	.2	-.2	.120	-.9000	-.9	.075	.036	.025	1.122
0	0	7	7	15	7	13	99	4.90	5.31	4.5	-.0005	-.001	.05	.019	-15.0	30.0	.055	.014	.002	.003	-.2	-.2	-.001	.3	.4	.332	-.9000	-.9	.375	.046	.025	.854
0	0	7	13	99	7	16	99	6.31	5.20	9.0	-.0005	.001	.04	.095	-15.0	32.0	.012	.060	.003	.002	-.2	.7	.001	1.3	.5	.053	-.9000	-.9	.324	.013	.176	1.039
0	0	8	4	99	8	6	99	6.03	5.22	9.3	-.9000	-.900	-.90	-.900	-15.0	20.9	.019	-.900	-.900	-.900	-.2	.8	-.900	1.4	.6	.261	-.9000	-.9	.399	-.900	.201	-.900
0	0	8	11	99	8	13	99	9.55	5.02	6.6	-.9000	-.900	-.90	-.900	-15.0	33.3	.027	-.900	-.900	-.900	-.2	.2	-.900	.3	.5	.173	-.9000	-.9	.450	-.900	.050	-.900
0	0	8	13	99	9	1	99	5.50	5.26	5.4	-.0005	-.001	.18	.043	-15.0	42.1	.012	.009	-.001	.017	-.2	.3	.002	.5	.6	.137	-.9000	-.9	.525	.169	.075	1.190
0	0	9	1	99	9	6	99	4.57	5.34	2.4	-.0005	-.001	.02	.006	-15.0	16.3	.004	.003	-.001	-.001	-.2	-.2	-.001	-.2	-.2	.075	-.9000	-.9	.075	.016	.025	2.158
0	0	9	6	99	9	8	99	3.80	5.42	1.7	-.0005	-.001	.01	-.005	-15.0	14.8	-.003	.001	-.001	-.001	-.2	-.2	.001	-.2	-.2	.031	-.9000	-.9	.075	.006	.025	2.128
0	0	9	8	99	9	10	99	3.72	5.43	4.8	-.0005	-.001	.01	.036	-15.0	21.4	-.003	.002	-.001	-.001	-.2	.3	-.001	.6	.2	.018	-.9000	-.9	.125	0.000	.075	1.070
0	0	9	10	99	9	11	99	6.76	5.17	6.1	-.0005	-.001	.03	.041	-15.0	32.1	.003	.002	-.001	-.001	-.2	.4	.001	.7	.3	.111	-.9000	-.9	.200	.015	.100	1.143
0	0	9	11	99	9	26	99	.21	6.68	18.8	-.9000	-.900	1.40	.210	-15.0	21.5	.171	-.900	-.900	-.900	.3	1.2	-.900	1.6	2.3	.549	-.9000	-.9	1.999	1.354	.301	1.538
0	0	9	26	99	10	12	99	3.80	5.42	7.1	-.0005	.003	.12	.069	-15.0	34.2	.008	.040	.006	.001	-.2	.7	.003	1.0	.4	.044	-.9000	-.9	.224	.093	.176	1.313
0	0	10	12	99	10	22	99	2.82	5.55	7.5	-.0005	-.001	.05	.087	-15.0	25.9	.008	.022	-.001	-.001	-.2	.8	.001	1.3	.2	.102	-.9000	-.9	0.000	.020	.201	1.183
0	0	10	22	99	10	24	99	6.76	5.17	11.8	-.0005	-.001	.05	.150	-15.0	32.4	-.003	.011	.001	-.001	-.2	1.3	.001	2.3	.6	.071	-.9000	-.9	.274	.001	.326	1.029
0	0	10	24	99	10	27	99	2.82	5.55	2.5	-.0005	.002	-.01	.007	-15.0	29.6	.004	.004	.001	-.001	-.2	.2	.002	-.2	-.5	.093	-.9000	-.9	.200	0.000	.050	1.588
0	0	10	27	99	10	28	99	3.89	5.41	2.5	-.0005	.002	-.01	.007	-15.0	22.4	-.003	.002	.001	-.001	-.2	-.2	.001	-.2	-.2	.022	-.9000	-.9	.075	.001	.025	2.227
0	0	10	28	99	11	1	99	8.91	5.05	7.9	-.0005	-.001	.04	.052	-15.0	34.9	.008	.013	.001	-.001	-.2	.5	-.001	.8	-.2	.230	-.9000	-.9	0.000	.021	.125	1.408
0	0	11	1	99	11	7	99	3.98	5.40	19.5	-.0005	.003	.14	.280	-15.0	21.6	-.003	.026	.001	-.001	-.2	2.5	.001	4.5	.5	.080	-.9000	-.9	0.000	.045	.627	1.049
0	0	11	7	99	11	15	99	24.55	4.61	22.4	-.9000	-.900	.33	.190	27.4	62.5	.073	-.900	-.900	-.900	-.2	1.6	-.900	2.5	1.8	1.687	-.9000	-.9	1.398	.269	.402	.983
0	0	11	15	99	11	20	99	7.24	5.14	23.8	-.0005	.003	.18	.340	-15.0	36.6	.036	.050	.002	.003	-.2	3.1	.004	5.2	.9	.195	-.9000	-.9	.122	.062	.778	1.089
0	0	11	20	99	11	29	99	3.80	5.42	20.4	-.0005	.002	.20	.300	-15.0	36.6	.078	.039	.002	-.001	-.2	2.7	.002	4.6	.3	.319	-.9000	-.9	0.000	.097	.678	1.153
0	0	11	29	99	12	3	99	7.41	5.13	9.5	-.0005	.001	.04	.100	-15.0	32.2	.023	.004	.001	-.001	-.2	1.0	-.001	1.7	-.2	.244	-.9000	-.9	0.000	.002	.251	1.204

LOWER MAINLAND ACID RAIN STUDY
****
PORT HARDY , B.C.
****
DEC 82-JUN 83
(VALUES ARE EXPRESSED IN MG PER LITRE)

	PERIOD																												EXCESS		SEA	
EVENT	MO	DY	HR	MO	DY	HR	H+	PH	COND	CD	CU	CA++	MG++	S.ACID	T.ACID	NH4+	FE	PB	MN	K+	NA+	ZN	CL-	SO4--	NO3-	AS	CATCH	SO4	CA	SO4	+/-
0	0	12	3	99	12	13	99	.13	6.90	35.2	-.0005	.005	.31	.420	-15.0	37.9	1.800	.019	.006	.003	.8	3.2	.008	4.9	2.4	.509	-.9000	-.9	1.597	.188	.803	1.576
0	0	12	13	99	12	17	99	2.00	5.70	29.4	-.0005	.002	.16	.480	-15.0	27.3	.112	.002	.002	.001	.3	4.2	.003	7.1	1.0	.142	-.9000	-.9	0.000	.000	1.054	1.101
0	0	12	17	99	12	19	99	4.07	5.39	12.8	-.0005	.002	.05	.180	-15.0	17.9	.039	.003	.001	-.001	-.2	1.6	-.001	2.8	.4	.146	-.9000	-.9	0.000	0.000	.402	1.867
0	0	12	19	99	12	24	99	4.47	5.35	12.9	-.0005	.002	.05	.170	-15.0	25.8	.019	.003	.002	-.001	-.2	1.5	.001	2.7	.4	.128	-.9000	-.9	.023	0.000	.377	1.038
0	0	12	24	99	12	31	99	4.07	5.39	24.7	-.0005	.001	.12	.380	-15.0	30.0	.028	.002	.002	-.001	-.2	3.4	-.001	5.9	.6	.049	-.9000	-.9	0.000	0.000	.853	1.076
0	0	12	31	99	1	5	99	8.51	5.07	22.0	-.0005	.002	.12	.310	-15.0	49.4	.095	.015	.003	-.001	-.2	2.3	-.001	4.4	.8	.275	-.9000	-.9	.223	.033	.577	1.018
0	0	1	5	99	1	7	99	6.17	5.21	8.3	-.0005	.001	.04	.094	-15.0	47.9	.022	.005	.002	-.001	-.2	.6	-.001	1.4	.2	.115	-.9000	-.9	.049	.017	.151	1.006
0	0	1	7	99	1	9	99	4.68	5.33	11.9	-.0005	-.001	.04	.160	-15.0	30.1	.005	.006	.002	.010	-.2	1.2	-.001	2.4	.2	.040	-.9000	-.9	0.000	0.000	.301	1.033
0	0	1	9	99	1	11	99	5.75	5.24	3.7	-.0005	-.001	.01	.023	-15.0	36.3	-.003	.001	.001	-.001	-.2	-.2	-.001	.3	-.2	.058	-.9000	-.9	.075	.006	.025	1.319
0	0	1	11	99	1	13	99	5.89	5.23	9.3	-.0005	-.001	.07	.110	-15.0	41.2	-.003	.050	.002	-.001	-.2	.9	-.001	1.5	.2	.049	-.9000	-.9	0.000	.036	.226	1.274
0	0	1	13	99	1	19	99	3.24	5.49	14.3	-.0005	-.001	.08	.200	-15.0	29.4	.010	.005	.002	.001	-.2	1.6	-.001	3.0	.2	.159	-.9000	-.9	0.000	.019	.402	1.055
0	0	1	19	99	1	28	99	4.79	5.32	19.0	-.0005	.002	.10	.300	-15.0	43.0	.024	.006	-.001	.001	-.2	2.4	.002	4.2	.7	.124	-.9000	-.9	.098	.009	.602	1.057
0	0	1	28	99	2	11	99	4.79	5.32	29.8	-.0005	.003	.18	.480	-15.0	42.5	.031	.060	.004	.004	-.2	3.9	.003	6.7	.9	.345	-.9000	-.9	0.000	.032	.979	1.065
0	0	2	11	99	2	12	99	3.89	5.41	5.4	-.0005	-.001	.01	.059	-15.0	36.5	.005	.008	-.001	-.001	-.2	.6	-.001	.8	-.2	.058	.0001	-.9	0.000	0.000	.151	1.492
0	0	2	12	99	2	13	99	4.27	5.37	4.2	-.9000	-.900	.01	.040	-15.0	40.7	.003	-.900	-.900	-.900	-.2	.4	-.900	.5	-.2	.049	.0001	-.9	0.000	0.000	.100	1.666
0	0	2	13	99	2	16	99	7.08	5.15	15.9	-.9000	-.900	.06	.210	-15.0	34.1	.013	-.900	-.900	-.900	-.2	1.7	-.900	3.0	.5	.151	-.0001	-.9	.073	0.000	.427	1.073
0	0	2	16	99	2	18	99	5.89	5.23	12.3	-.9000	-.900	.04	.160	-15.0	40.9	.012	-.900	-.900	-.900	-.2	1.3	-.900	2.4	.2	.146	-.0001	-.9	0.000	0.000	.326	1.089
0	0	3	7	9	3	8	16	2.51	5.60	29.9	-.0005	.005	.16	.490	-15.0	33.5	.003	.018	.002	-.001	-.2	4.0	.003	7.0	.8	-.009	-.0001	-.9	0.000	.008	1.004	1.062
0	0	3	8	16	3	9	9	7.24	5.14	10.5	-.0005	-.001	.05	.140	24.1	-.9	.003	.008	-.001	-.001	-.2	1.2	-.001	2.1	-.2	.013	-.0001	-.9	0.000	.004	.301	1.238
0	0	3	9	9	3	11	9	2.88	5.54	9.3	-.0005	.030	.04	.120	-15.0	30.0	.015	.002	.002	-.001	-.2	.9	.004	1.6	.3	.071	-.0001	-.9	.074	.006	.226	1.091
0	0	3	11	9	3	13	10	4.17	5.38	10.9	-.9000	-.900	.05	.140	-15.0	45.5	.003	-.900	-.900	-.900	-.2	1.2	-.900	2.1	.2	.022	.0002	-.9	0.000	.004	.301	1.147
0	0	3	13	10	3	14	10	9.55	5.02	5.6	-.9000	-.900	.01	.038	-15.0	48.8	-.003	-.900	-.900	-.900	-.2	.3	-.900	.6	.2	.416	-.9000	-.9	.125	0.000	.075	1.038
0	0	3	26	15	3	27	14	7.59	5.12	25.2	-.9000	-.900	.18	.340	-15.0	42.6	-.003	-.900	-.900	-.900	-.2	3.0	-.900	5.3	1.0	.177	-.9000	-.9	.247	.066	.753	1.026
0	0	3	27	16	3	30	9	4.57	5.34	8.1	-.0005	.002	.05	.100	-15.0	42.9	.008	.005	.001	.001	-.2	.7	-.001	1.4	.2	.080	.0001	-.9	.024	.023	.176	1.085
0	0	3	30	9	4	1	12	2.14	5.67	9.4	-.9000	-.900	.21	.110	-15.0	42.5	.013	-.900	-.900	-.900	-.2	.9	-.900	1.5	.4	.190	.0002	-.9	.174	.176	.226	1.194
0	0	4	1	12	4	3	12	5.37	5.27	7.4	-.0005	.002	.03	.085	-15.0	45.3	.006	.005	-.001	-.001	-.2	.7	-.001	1.2	-.2	.044	.0001	-.9	0.000	.003	.176	1.288
0	0	4	3	12	4	8	17	5.25	5.28	10.6	-.0005	.003	.06	.130	-15.0	45.4	.031	.010	-.001	-.001	-.2	1.0	.001	2.0	.2	.142	-.0001	-.9	0.000	.022	.251	1.061
0	0	4	24	16	4	27	9	13.18	4.88	7.3	-.0005	.003	.05	.031	-15.0	42.8	.058	.020	.003	.001	-.2	-.2	.001	.5	.5	.319	.0005	-.9	.475	.046	.025	.956
0	0	5	17	10	5	20	10	5.62	5.25	8.9	-.9000	-.900	.14	.120	-15.0	44.4	.044	-.900	-.900	-.900	.2	.8	-.900	1.0	.9	.297	-.0001	-.9	.699	.110	.201	1.253
0	0	6	4	10	6	5	13	5.89	5.23	5.0	-.0005	.003	.06	.045	-15.0	39.4	-.003	.020	.002	.002	-.2	.4	-.001	.5	.2	.089	-.0001	-.9	.100	.045	.100	1.656

LOWER MAINLAND ACID RAIN STUDY
****
PORT HARDY , B.C.
****
JUN 83-OCT 83
(VALUES ARE EXPRESSED IN MG PER LITRE)

EVENT	PERIOD MO	DY	HR	MO	DY	HR	H+	PH	COND	CD	CU	CA++	MG++	S.ACID	T.ACID	NH4+	FE	PB	MN	K+	NA+	ZN	CL-	SO4--	NO3-	AS	CATCH	EXCESS SO4	CA	SEA SO4	+/-
0	0	6	7	16	6	10	10	9.12	5.04	6.6	-.0005	.001	.06	.029	-15.0	42.8	.044	.002	-.001	.001	-.2	.3	-.001	.3	.4	.337	-.0001	-.9	.325	.049	.075	1.464
0	0	6	14	14	6	17	9	10.23	4.99	6.2	-.0005	.001	.04	.018	-15.0	41.3	.036	.003	-.001	.001	-.2	-.2	-.001	.2	.2	.492	.0001	-.9	.175	.036	.025	1.275
0	0	6	17	9	6	18	13	6.92	5.16	3.2	-.0005	.001	-.01	.011	-15.0	27.7	.004	.018	-.001	.012	-.2	-.2	-.001	-.2	-.2	.164	-.0001	-.9	.075	.001	.025	2.014
0	0	6	18	13	6	19	10	4.57	5.34	2.8	-.0005	.003	-.01	.011	-15.0	16.9	-.003	.005	.002	-.001	-.2	-.2	-.001	-.2	-.2	.084	-.0001	-.9	.075	.001	.025	2.032
0	0	6	19	10	6	23	10	11.22	4.95	5.8	-.0005	.001	.03	.025	15.3	52.8	.031	.013	-.001	-.001	-.2	-.2	-.001	.2	-.2	.310	-.0001	-.9	.075	.026	.025	1.839
0	0	6	23	10	6	25	99	15.85	4.80	8.0	-.0005	.001	.01	.016	19.3	55.0	.004	.002	-.001	-.001	-.2	-.2	-.001	-.2	.3	.235	-.0001	-.9	.275	.006	.025	1.929
0	0	6	25	99	6	27	13	10.72	4.97	4.1	-.9000	-.900	-.90	-.900	-15.0	35.8	-.003	-.900	-.900	-.900	-.2	-.2	-.900	-.2	-.2	.283	-.0001	-.9	.075	-.900	.025	-.900
0	0	6	27	13	6	29	99	8.71	5.06	2.9	-.0005	.002	.01	.007	-15.0	39.1	.004	.003	-.001	-.001	-.2	-.2	-.001	-.2	.2	.151	-.9000	-.9	.175	.006	.025	1.796
0	0	6	29	99	7	2	9	5.01	5.30	5.1	-.9000	-.900	.04	.034	15.3	54.8	.105	-.900	-.900	-.900	-.2	-.2	-.900	.3	.3	.226	-.0001	-.9	.275	.036	.025	1.228
0	0	7	2	10	7	7	9	19.05	4.72	11.0	-.0005	.002	.07	.070	23.6	60.6	.050	.017	.001	.002	-.2	.5	-.001	.8	.6	.793	-.0001	-.9	.475	.051	.125	1.158
0	0	7	7	9	7	11	10	9.55	5.02	4.9	-.0005	.002	.02	.044	15.2	39.6	.015	.019	-.001	.001	-.2	.3	-.001	.4	.2	.151	-.0001	-.9	.125	.009	.075	1.712
0	0	7	11	10	7	12	10	5.13	5.29	3.0	-.0005	-.001	-.01	.011	-15.0	32.6	.005	.014	.001	.001	-.2	-.2	-.001	-.2	-.2	.133	-.0001	-.9	.075	.001	.025	1.911
0	0	7	12	10	7	15	9	5.37	5.27	4.5	-.0005	.001	.01	.035	-15.0	20.6	.004	-.001	.001	.001	-.2	.2	-.001	.4	-.2	.058	-.0001	-.9	.050	.002	.050	1.415
0	0	7	15	9	7	25	13	17.78	4.75	9.8	-.0005	.003	.11	.043	22.6	60.8	.003	.033	.003	.002	-.2	.3	.002	.5	.7	.372	.0004	-.9	.625	.099	.075	1.228
0	0	7	25	13	7	26	9	9.55	5.02	9.5	-.0005	-.001	.04	.049	-15.0	45.8	.013	.035	.001	.002	-.2	.5	-.001	.7	.2	.155	.0001	-.9	.074	.021	.125	1.538
0	0	7	26	9	7	29	8	6.46	5.19	7.2	-.0005	-.001	.04	.051	-15.0	44.0	.006	.004	.001	.001	-.2	.4	-.001	.7	-.2	.128	.0006	-.9	0.000	.025	.100	1.379
0	0	7	29	8	8	3	10	17.38	4.76	9.5	-.0005	-.001	.03	.033	27.2	156.0	.008	.004	.001	.005	-.2	.2	.001	.4	.6	.166	.0001	-.9	.550	.022	.050	1.306
0	0	8	3	10	8	9	12	28.18	4.55	13.8	-.0005	-.001	.05	.048	31.2	84.7	-.003	.011	-.001	-.001	-.2	.4	-.001	.6	1.1	.275	-.0001	-.9	1.000	.035	.100	1.235
0	0	8	9	12	9	5	13	15.14	4.82	8.4	-.0005	.002	.05	.029	19.1	52.8	.087	.034	.004	.003	-.2	-.2	.001	.3	.7	.168	-.0001	-.9	.675	.046	.025	1.233
0	0	9	5	13	9	6	11	4.68	5.33	9.9	-.0005	-.001	.04	.150	-15.0	31.8	.019	.009	-.001	-.001	-.2	1.0	-.001	1.9	.3	.093	-.0001	-.9	.049	.002	.251	1.078
0	0	9	6	11	9	8	12	8.51	5.07	17.0	-.0005	.002	.15	.270	15.6	31.7	.039	.140	.002	.004	-.2	1.8	.001	3.2	.9	.133	-.0001	-.9	.448	.082	.452	1.091
0	0	9	8	12	9	14	16	15.85	4.80	7.2	-.0005	.001	.01	.028	20.1	41.4	.035	.005	.002	-.001	-.2	.2	-.001	.4	.4	.221	-.0001	-.9	.350	.002	.050	1.374
0	0	9	14	16	9	18	16	14.79	4.83	16.9	-.9000	-.900	.68	.160	18.4	33.0	.037	-.900	-.900	-.900	-.2	1.4	-.900	2.4	.7	.261	-.0001	-.9	.349	.027	.351	1.127
0	0	9	18	16	10	6	15	8.71	5.06	9.5	-.0005	.002	.05	.120	-15.0	44.9	.130	.048	.002	.002	-.2	.6	-.001	1.2	.6	.146	.0003	-.9	.449	.027	.151	1.169
0	0	10	6	15	10	9	11	6.17	5.21	10.2	-.9000	-.900	.04	.110	-15.0	35.7	.055	-.900	-.900	-.900	-.2	.9	-.900	1.6	.3	.106	.0005	-.9	.074	.006	.226	1.167
0	0	10	9	11	10	17	15	10.72	4.97	16.5	-.0005	.003	.10	.230	17.4	44.5	.021	.028	.002	-.001	-.2	1.6	-.001	3.0	.4	.301	.0001	-.9	0.000	.039	.402	1.104
0	0	10	17	15	10	21	9	7.24	5.14	13.2	-.0005	-.001	.06	.150	16.1	34.8	.014	.013	.001	-.001	-.2	1.2	-.001	2.3	.3	.186	-.0001	-.9	0.000	.014	.301	1.054
0	0	10	21	9	10	22	10	7.41	5.13	9.4	-.0005	.001	.04	.092	-15.0	31.6	.015	.003	-.001	-.001	-.2	.7	-.001	1.4	.2	.146	-.0001	-.9	.024	.013	.176	1.105
0	0	10	22	10	10	26	11	6.92	5.16	7.9	-.0005	-.001	.03	.076	-15.0	10.6	.009	.007	-.001	-.001	-.2	.5	-.001	1.1	-.2	.164	-.0001	-.9	0.000	.011	.125	1.104
0	0	10	26	11	10	31	10	6.31	5.20	5.8	-.0005	.003	.02	.044	-15.0	35.3	.012	.013	-.001	-.001	-.2	.3	.001	.8	-.2	.177	.0001	-.9	.025	.009	.075	.989

LOWER MAINLAND ACID RAIN STUDY
****
PORT HARDY , B.C.
****
OCT 83-NOV 83
(VALUES ARE EXPRESSED IN MG PER LITRE)

EVENT	PERIOD MO	DY	HR	MO	DY	HR	H+	PH	COND	CD	CU	CA++	MG++	S.ACID	T.ACID	NH4+	FE	PB	MN	K+	NA+	ZN	CL-	SO4--	NO3-	AS	CATCH	EXCESS SO4	EXCESS CA	SEA SO4	+/-
0	0	10	31	10	11	2	18	3.80	5.42	5.3	-.0005	-.001	.01	.058	-15.0	14.7	.005	.041	.001	.001	-.2	.3	-.001	.8	-.2	.084	.0001	-.9	.025	0.000	.075	.960
0	0	11	2	18	11	4	9	4.27	5.37	7.9	-.0005	.001	.02	.096	-15.0	21.5	-.003	.001	-.001	-.001	-.2	.8	-.001	1.4	-.2	.066	-.0001	-.9	0.000	0.000	.201	1.187
0	0	11	4	9	11	6	8	8.51	5.07	44.0	-.0005	.002	.23	.640	-15.0	48.7	.006	.012	.002	.001	-.2	5.8	.002	10.9	1.5	.115	.0002	-.9	.044	.010	1.456	.963
0	0	11	6	8	11	7	16	5.50	5.26	4.8	-.0005	-.001	.01	.047	-15.0	39.4	-.003	-.001	-.001	-.001	-.2	.5	-.001	.9	-.2	-.009	.0001	-.9	0.000	0.000	.125	1.244
0	0	11	7	16	11	12	16	5.37	5.27	24.6	-.0005	-.001	.13	.350	-15.0	42.1	-.003	.006	.007	-.001	-.2	3.1	.001	5.5	.4	-.009	.0001	-.9	0.000	.012	.778	1.089
0	0	11	12	16	11	15	12	8.51	5.07	21.4	-.0005	.001	.11	.310	-15.0	40.5	.008	.004	.001	-.001	-.2	2.7	.001	4.8	.4	.133	-.0001	-.9	0.000	.007	.678	1.097
0	0	11	15	12	11	17	16	6.46	5.19	5.5	-.0005	.003	.01	.050	-15.0	31.3	-.003	.060	.001	.002	-.2	.3	-.001	.8	-.2	.062	-.0001	-.9	.025	0.000	.075	1.043
0	0	11	17	16	11	20	18	5.89	5.23	3.9	-.0005	-.001	.01	.022	-15.0	41.6	.003	.008	-.001	.002	-.2	.3	-.001	.4	-.2	.071	-.0001	-.9	.025	0.000	.075	1.652
0	0	11	20	18	11	24	16	10.72	4.97	20.7	-.0005	.001	.10	.260	-15.0	52.7	.004	.008	.004	-.001	-.2	2.2	.002	4.0	.3	.425	-.0001	-.9	0.000	.016	.552	1.077
0	0	11	24	16	11	27	16	8.32	5.08	25.1	-.0005	.001	.12	.350	-15.0	50.0	.004	.004	.002	-.001	-.2	3.1	-.001	5.3	.6	.177	-.0001	-.9	0.000	.002	.778	1.096
AVERAGES								6.95 (5.16)	5.26	11.9	-.0003	-.002	-.09	-.173	-9.6	37.2	-.047	-.014	-.002	-.002	-.1	-1.14	-.001	-2.03	-.53	-.185	-.0001	-.9	.270	.044	.286	1.230

REMARKS : (1) UNKNOWN START OR END TIMES ARE DESIGNATED BY 99. (2) HYDROGEN ION VALUES (H+) ARE COMPUTED FROM THE MEASURED PH. THE AVERAGE PH IS AN ARITHMETIC AVERAGE WHILE THE NUMBER IN PARENTHESES IS THE AVERAGE PH COMPUTED FROM THE H+ VALUES. (3) CONDUCTANCE IS EXPRESSED IN MICRO-SIEMENS/CM., STRONG ACID, TOTAL ACID & H+ ARE EXPRESSED IN MICRO EQUIVALENTS/LITRE. (4) CD, CU, FE, PB, MN & ZN ARE EXTRACTABLE AMOUNTS. (5) MINUS SIGNS FLAG VALUES THAT ARE BELOW DETECTION LIMITS. WHEN THE AVERAGES ARE COMPUTED, 1/2 THE DETECTION LIMIT IS USED AND THE AVERAGE VALUE IS AGAIN FLAGGED WITH A MINUS SIGN. (6) MISSING DATA ARE DESIGNATED BY -.9. (7) THE CATCH AMOUNTS ARE CALCULATED FROM THE SAMPLE VOLUME AND ARE EXPRESSED IN MILLIMETRES OF RAINFALL, WITH A FULL SAMPLER BEING APPROX. 34 MM. (8) THE ION BALANCE (+/-) IS COMPUTED FROM THE SUM OF H+, CA++, MG++, NH4+, K+ & NA+ DIVIDED BY THE SUM OF CL-, SO4-- & NO3-. VALUES BELOW THE DETECTION LIMITS ARE HANDLED AS ABOVE.

LOWER MAINLAND ACID RAIN STUDY
****
PORT RENFREW , B.C.
****
FEB 83-JUN 84

(VALUES ARE EXPRESSED IN MG PER LITRE)

EVENT	PERIOD NO	DY	HR	NO	DY	HR	H+	PH	COND	CD	CU	CA++	MG++	S.ACID	T.ACID	NH4+	FE	PB	MN	K+	NA+	ZN	CL-	SO4--	NO3-	AS	CATCH	EXCESS SO4	EXCESS CA	SEA SO4	+/-
25	0	2	10	8	2	11	8	3.89	5.41	8.0	-.0005	-.001	.03	.110	-15.0	33.2	.013	.001	-.001	-.001	-.2	.9	.001	1.6	-.2	.124	-.0001	34.2	0.000	0.000	.226	1.155
26	0	2	11	9	2	12	12	3.39	5.47	7.1	-.0005	.003	.03	.084	-15.0	43.8	.010	.004	-.001	-.001	-.2	.7	.002	1.2	-.2	.084	-.0001	34.0	0.000	.003	.176	1.217
27	0	2	16	17	2	17	8	3.31	5.48	2.9	-.0005	.002	.05	.017	-15.0	22.8	.009	.047	-.001	.002	-.2	.2	.001	.2	-.2	.120	-.0001	34.3	.050	.042	.050	1.963
28	0	2	22	17	2	23	8	3.47	5.46	2.5	-.0005	-.001	.01	.006	-15.0	35.6	.004	.070	-.001	.002	-.2	-.2	-.001	-.2	.4	.080	-.0001	34.1	.375	.006	.025	.932
29	0	3	5	16	3	7	9	6.61	5.18	16.1	-.0005	.004	.05	.110	-15.0	31.4	.090	.005	.003	-.001	-.2	.9	.003	1.4	.4	.797	.0001	20.3	.174	.016	.226	1.069
30	0	3	8	10	3	8	16	3.80	5.42	3.5	-.0005	.002	-.01	-.005	-15.0	38.4	.008	.001	-.001	-.001	-.2	-.2	-.001	-.2	-.2	.040	-.0001	29.8	.075	.001	.025	2.092
30	0	3	8	16	3	9	9	4.57	5.34	5.9	-.0005	.001	.02	.058	-15.0	25.2	.006	.001	-.001	-.001	-.2	.5	.006	.7	-.2	.080	-.0001	34.3	0.000	.001	.125	1.513
0	0	3	11	16	3	12	14	14.45	4.84	9.9	-.9000	-.900	.03	.058	19.6	72.8	.006	-.900	-.900	-.900	-.2	.4	-.900	.9	.3	.505	-.9000	11.6	.200	.015	.100	1.031
32	0	3	26	12	3	28	10	7.24	5.14	11.3	-.0005	.002	.05	.130	-15.0	65.2	.012	.002	.002	-.001	-.2	1.1	.003	1.9	.3	.106	-.0001	20.3	.024	.008	.276	1.162
33	0	3	29	10	3	30	10	2.57	5.59	21.3	-.0005	.002	.19	.330	15.0	40.8	.022	.007	-.001	.001	-.2	2.6	-.001	4.7	.5	.151	.0001	23.0	0.000	.091	.653	1.073
34	0	6	9	9	6	11	17	7.59	5.12	11.4	-.0005	.001	.05	.140	-15.0	31.4	-.003	.007	-.001	-.001	-.2	1.1	-.001	1.9	.2	.089	-.0001	26.3	0.000	.008	.276	1.218
36	0	6	16	16	6	17	17	.43	6.37	12.8	-.0005	.001	.04	.058	-15.0	60.7	.031	.014	.001	.004	-.2	.4	.001	.7	.5	.673	-.0001	21.4	.400	.025	.100	.704
38	0	10	18	7	10	20	8	9.12	5.04	8.1	-.0005	.004	.06	.070	16.4	33.6	.008	.043	.002	-.001	-.2	.4	.003	.9	.2	.257	-.0001	20.9	.100	.045	.100	1.136
39	0	10	21	8	10	25	8	8.13	5.09	7.1	-.0005	-.001	.02	.048	-15.0	33.6	.019	.100	-.001	.002	-.2	.5	.001	.8	.2	.226	-.0001	34.2	.074	.001	.125	1.265
40	0	10	31	18	11	1	21	7.24	5.14	5.3	-.0005	-.001	.01	.036	-15.0	43.2	.015	.090	-.001	.002	-.2	.3	-.001	.6	.2	.159	-.0001	24.3	.125	0.000	.075	1.148
40	0	11	1	21	11	2	9	4.17	5.38	7.0	-.0005	-.001	.01	.076	-15.0	16.9	.017	.025	.001	.001	-.2	.6	-.001	1.2	-.2	.133	-.0001	18.6	0.000	0.000	.151	1.064
41	0	11	2	9	11	2	21	3.02	5.52	4.0	-.0005	.002	.01	.034	-15.0	17.4	.009	.037	-.001	.001	-.2	.2	.001	.6	-.2	.062	-.0001	34.2	.050	.002	.050	.903
41	0	11	2	21	11	3	9	4.68	5.33	8.5	-.9000	-.900	.03	.089	-15.0	29.6	.021	-.900	-.900	-.900	-.2	.6	-.900	1.4	-.2	.146	-.0001	12.8	0.000	.007	.151	.986
42	0	11	5	16	11	7	18	3.02	5.52	27.7	-.0005	.003	.15	.440	-15.0	24.4	-.003	.003	-.001	-.001	-.2	3.8	.001	6.7	.6	.018	-.0001	34.5	0.000	.006	.954	1.064
44	0	12	7	13	12	8	24	9.33	5.03	22.8	-.0005	.003	.11	.300	-15.0	26.7	.012	.002	.001	-.001	-.2	2.6	.002	4.8	.5	.204	-.0001	34.2	0.000	.011	.653	1.045
44	0	12	9	0	12	11	18	5.25	5.28	30.1	-.0005	-.001	.15	.450	-15.0	40.5	.014	.002	.001	-.001	.2	3.9	.001	7.0	.7	.162	-.0001	34.2	0.000	.002	.979	1.054
45	0	1	4	9	1	5	9	5.01	5.30	3.8	-.0005	.002	.02	.022	-15.0	37.0	.008	.009	.001	-.001	-.2	.2	.001	.4	-.2	.168	-.0001	34.2	.050	.012	.050	1.214
47	0	2	8	16	2	9	9	5.75	5.24	13.1	-.9000	-.900	.09	.160	-15.0	35.0	.028	-.900	-.900	-.900	-.2	1.3	-.900	2.3	-.2	.270	-.9000	7.5	0.000	.041	.326	1.179
48	0	2	17	9	2	20	17	.91	6.04	11.9	-.9000	-.900	.10	.120	-15.0	37.2	.012	-.900	-.900	-.900	.5	1.4	-.900	2.4	.2	.195	-.9000	9.4	0.000	.047	.351	1.202
49	0	2	23	9	2	24	9	11.22	4.95	5.7	-.9000	-.900	.02	.023	18.8	50.4	.040	-.900	-.900	-.900	-.2	-.2	-.900	.3	.2	.496	-.0001	11.0	.175	.016	.025	1.127
51	0	2	28	18	2	29	23	2.04	5.69	5.2	-.0005	.003	.13	.051	-15.0	28.0	-.003	-.001	-.001	-.001	-.2	.5	.008	.6	.2	.204	-.0001	17.1	.074	.111	.125	1.522
52	0	3	16	9	3	19	23	2.34	5.63	25.7	-.0010	.003	.11	.080	18.4	70.7	.105	.004	-.001	-.010	-.2	3.1	.004	5.5	.6	.128	-.0001	34.2	0.000	0.000	.778	.929
55	0	5	18	8	5	22	16	6.61	5.18	9.7	-.0010	.001	.10	.090	-15.0	44.3	.035	.030	.001	-.010	-.2	.8	.002	1.3	.3	.235	.0001	34.2	.099	.070	.201	1.248
56	0	6	27	16	6	29	16	8.71	5.06	6.6	-.0010	.009	-.90	-.900	-15.0	55.1	-.003	.015	.002	-.010	-.2	-.2	.003	.5	.2	.186	.0002	22.6	.175	-.900	.025	-.900
AVERAGES								5.44 (5.26)	5.35	10.9	-.0003	-.002	-.06	-.114	-9.2	38.8	-.019	-.022	-.001	-.002	-.1	-1.01	-.002	-1.82	-.27	.208	-.0001	25.6	.077	.021	.254	1.186

LOWER MAINLAND ACID RAIN STUDY
****
SAANICHTON , B.C.
****
FEB 83-JUN 84

(VALUES ARE EXPRESSED IN MG PER LITRE)

EVENT	PERIOD MO	DY	HR	MO	DY	HR	H+	PH	COND	CD	CU	CA++	MG++	S.ACID	T.ACID	NH4+	FE	PB	MN	K+	NA+	ZN	CL-	SO4--	NO3-	AS	CATCH	EXCESS SO4	EXCESS CA	SEA SO4	+/-
25	0	2	10	8	2	11	8	19.50	4.71	37.1	-.9000	-.900	.16	.490	22.0	42.7	.009	-.900	-.900	-.900	-.2	4.0	-.900	7.1	1.9	.531	.0006	12.1	.896	.008	1.004	.986
26	0	2	11	9	2	14	8	9.77	5.01	9.3	-.9000	-.900	.03	.079	-15.0	39.1	.030	-.900	-.900	-.900	-.2	.7	-.900	1.2	.4	.319	.0002	15.6	.224	.003	.176	1.108
27	0	2	16	16	2	17	16	12.02	4.92	28.2	-.9000	-.900	.13	.370	19.1	49.2	.004	-.900	-.900	-.900	.2	4.1	-.900	5.3	1.2	.345	.0005	17.2	.171	0.000	1.029	1.292
30	0	3	8	10	3	9	8	11.75	4.93	20.0	-.9000	-.900	.10	.260	-15.0	39.1	.031	-.900	-.900	-.900	-.2	2.1	-.900	3.9	.9	.341	.0004	12.5	.373	.020	.527	.996
31	0	3	11	17	3	14	8	6.92	5.16	9.7	-.0005	.005	.05	.100	-15.0	55.2	.062	.006	.004	-.001	-.2	.9	.002	1.5	.3	.182	.0001	24.9	.074	.016	.226	1.219
32	0	3	26	8	3	28	8	.50	6.30	14.6	-.9000	-.900	.07	.100	-15.0	52.6	1.222	-.900	-.900	-.900	.4	.8	-.900	1.5	.4	.669	-.9000	12.0	.199	.040	.201	2.035
33	0	3	29	10	3	30	10	9.77	5.01	17.1	-.9000	-.900	.18	.230	-15.0	40.8	.015	-.900	-.900	-.900	.2	1.8	-.900	3.4	.9	.292	-.9000	9.8	.448	.112	.452	1.022
34	0	6	9	9	6	10	10	9.77	5.01	-.9	-.9000	-.900	-.90	-.900	-.9	-.9	.134	-.900	-.900	-.900	-.9	-.9	-.900	-.9	-.9	1.174	-.9000	1.5	-.900	-.900	-.900	-.900
35	0	6	13	16	6	15	11	7.41	5.13	6.9	-.9000	-.900	-.90	-.900	-.9	-.9	.135	-.900	-.900	-.900	-.2	.2	-.900	.2	.6	.682	-.9000	4.8	.550	-.900	.050	-.900
36	0	6	16	10	6	17	10	33.11	4.48	13.9	-.9000	-.900	.05	.014	35.7	58.9	.081	-.900	-.900	-.900	-.2	-.2	-.900	.2	.8	1.196	-.9000	10.9	.775	.046	.025	1.158
37	0	9	9	4	9	12	9	28.18	4.55	22.5	.0006	.003	.09	.160	33.4	65.7	.067	.060	.005	.004	-.2	1.1	.004	2.1	1.3	.780	.0005	16.7	1.024	.048	.276	1.011
38	0	10	18	16	10	20	9	1.07	5.97	4.9	-.0005	.019	.16	.031	-15.0	35.0	.023	.033	.003	.006	-.2	.5	.020	.2	.4	.279	.0001	9.9	.275	.141	.125	2.014
39	0	10	21	12	10	24	8	10.00	5.00	8.6	.0009	.009	.12	.070	-15.0	44.6	.067	.080	.002	.008	-.2	.3	.009	.7	.4	.438	-.0001	8.2	.325	.109	.075	1.169
40	0	10	31	16	11	2	12	10.96	4.96	18.2	-.9000	-.900	.17	.200	-15.0	37.2	.129	-.900	-.900	-.900	-.2	1.6	-.900	3.1	.9	.478	.0002	6.8	.498	.109	.402	1.012
41	0	11	2	12	11	3	10	6.46	5.19	10.9	-.0005	.001	.11	.130	-15.0	35.8	.028	.031	.001	.002	-.2	.9	.001	1.9	.2	.306	.0002	21.6	0.000	.076	.226	1.051
43	0	11	15	10	11	16	11	3.72	5.43	12.0	-.0005	.010	.07	.140	-15.0	51.7	.084	.006	.002	-.001	-.2	1.2	.012	2.3	.2	.266	-.0001	10.6	0.000	.024	.301	1.066
44	0	12	7	13	12	9	9	1.35	5.87	9.9	.0029	.004	.37	.090	-15.0	31.6	.112	.021	.003	-.001	-.2	.6	.009	1.3	.2	.598	.0001	17.1	.049	.347	.151	1.230
45	0	1	4	9	1	5	9	5.62	5.25	18.7	-.9000	-.900	-.90	-.900	-15.0	35.0	.086	-.900	-.900	-.900	-.2	.3	-.900	.4	-.2	.651	-.9000	2.2	.025	-.900	.075	-.900
46	0	1	23	9	1	25	9	3.02	5.52	4.8	.0011	.008	.05	.025	-15.0	47.6	.066	.015	.004	-.001	-.2	.3	.010	.4	-.2	.230	-.0001	12.0	.025	.039	.075	1.572
47	0	2	8	16	2	9	9	8.71	5.06	7.2	-.9000	-.900	.07	.021	16.4	39.0	.103	-.900	-.900	-.900	-.2	.2	-.900	.5	.2	.385	-.9000	6.4	.150	.062	.050	1.262
48	0	2	17	16	2	20	12	7.08	5.15	10.7	.0020	.007	.10	.087	-15.0	48.2	.165	.200	.003	.010	-.2	.8	.005	1.4	.5	.443	-.0001	17.1	.299	.070	.201	1.152
49	0	2	23	11	2	24	9	27.54	4.56	16.9	-.9000	-.900	.10	.082	30.8	61.1	.127	-.900	-.900	-.900	-.2	.7	-.900	-.9	.8	1.373	.0005	6.0	.624	.073	.176	-.900
50	0	2	27	10	2	28	15	16.98	4.77	25.4	-.9000	-.900	.53	.250	24.5	60.5	.202	-.900	-.900	-.900	.2	2.8	-.900	3.0	2.4	1.462	-.9000	3.2	1.697	.424	.703	1.278
52	0	3	16	9	3	20	9	21.38	4.67	20.3	.0008	.006	.09	.075	39.2	73.9	.210	.041	.006	.002	-.2	.7	.006	1.3	1.7	1.395	.0005	21.7	1.524	.063	.176	.811
53	0	3	22	10	3	23	9	-.90	-.90	8.4	-.9000	-.900	.10	.081	-.9	-.9	.089	-.900	-.900	-.900	.2	.5	-.900	.7	.6	.735	-.9000	3.9	.475	.081	.125	-.900
54	0	4	6	16	4	10	10	26.92	4.57	46.5	-.9000	-.900	-.90	-.900	29.5	85.0	.059	-.900	-.900	-.900	-.2	4.6	-.900	8.4	2.6	1.063	-.9000	6.4	1.445	-.900	1.155	-.900
55	0	5	18	11	5	20	13	26.92	4.57	16.8	-.9000	-.900	-.90	-.900	32.5	74.6	.154	-.900	-.900	-.900	-.2	.4	-.900	.7	1.1	1.395	-.9000	12.4	1.000	-.900	.100	-.900
56	0	6	27	16	6	29	10	19.50	4.71	8.7	-.0010	.009	.49	.010	21.7	64.7	.037	.068	.005	-.010	-.2	-.2	.007	-.2	.4	.624	.0003	16.4	.375	.486	.025	2.533
AVERAGES								12.81 (4.89)	5.05	15.9	-.0009	.007	.15	.135	-16.4	50.8	.126	.051	.003	-.004	-.1	-1.20	.008	-2.03	-.80	.665	-.0003	11.4	.501	.104	.300	1.285

LOWER MAINLAND ACID RAIN STUDY
****
SALTSPRING I. , B.C.
****
DEC 82-MAR 84

(VALUES ARE EXPRESSED IN MG PER LITRE)

EVENT	PERIOD MO	DY	HR	MO	DY	HR	H+	PH	COND	CD	CU	CA++	MG++	S.ACID	T.ACID	NH4+	FE	PB	MN	K+	NA+	ZN	CL-	SO4--	NO3-	AS	CATCH	EXCESS SO4	EXCESS CA	SEA SO4	+/-
0	0	12	14	13	12	15	9	11.22	4.95	19.4	-.0005	.003	.07	.230	15.5	42.6	.021	.005	.001	.001	-.2	2.2	.002	3.7	.5	.430	-.9000	-.9	0.000	0.000	.552	1.093
22	0	12	15	16	12	16	8	6.92	5.16	12.1	-.0005	.002	.08	.140	-15.0	32.4	.031	.003	.001	-.001	-.2	1.4	-.001	2.3	.2	.213	-.9000	-.9	0.000	.027	.351	1.209
23	0	12	20	21	12	23	11	12.88	4.89	12.1	-.9000	-.900	.08	.140	15.5	37.5	.040	-.900	-.900	-.900	-.2	1.2	-.900	2.0	.5	.483	-.9000	15.4	.199	.034	.301	1.144
24	0	1	7	11	1	8	9	3.89	5.41	2.8	-.0005	.002	.01	.015	-15.0	20.5	.012	.003	.002	-.001	-.2	-.2	.002	.2	-.2	.142	-.9000	20.9	.075	.006	.025	1.318
25	0	2	10	10	2	11	9	16.98	4.77	17.7	-.0005	-.001	.09	.096	22.3	43.5	.024	.002	.001	-.001	-.2	.8	.002	1.4	.6	.567	.0005	34.3	.399	.060	.201	1.113
26	0	2	11	9	2	12	9	12.88	4.89	9.4	-.0005	.002	.02	.059	21.9	43.1	.012	.003	-.001	-.001	-.2	.5	.001	.8	.5	.456	.0004	15.0	.375	.001	.125	1.084
27	0	2	16	18	2	17	10	15.85	4.80	11.8	-.0005	.003	.04	.100	20.8	43.8	.013	.035	-.001	-.001	-.2	.9	.002	1.4	.8	.438	.0006	26.5	.574	.006	.226	1.084
28	0	2	22	16	2	23	13	14.45	4.84	7.4	-.9000	-.900	.03	.027	19.9	52.1	.021	-.900	-.900	-.900	-.2	.2	-.900	.4	.7	.518	.0004	10.2	.650	.022	.050	.894
30	0	3	8	10	3	9	8	10.47	4.98	11.6	-.0005	.001	.04	.100	-15.0	40.0	.012	.006	.002	-.001	-.2	.8	.002	1.4	.4	.239	.0004	24.0	.199	.010	.201	1.136
31	0	3	11	22	3	13	15	13.18	4.88	11.7	-.9000	-.900	.09	.054	19.6	73.8	.129	-.900	-.900	-.900	-.2	.5	-.900	.8	.5	.474	-.9000	13.4	.375	.071	.125	1.319
32	0	3	26	12	3	28	12	8.71	5.06	17.5	-.9000	-.900	.18	.250	-15.0	-.9	.037	-.900	-.900	-.900	.8	1.5	-.900	3.1	1.4	.035	-.9000	7.3	1.024	.123	.377	1.076
33	0	3	29	10	3	30	10	10.23	4.99	11.5	-.9000	-.900	.11	.130	17.2	72.9	-.003	-.900	-.900	-.900	-.2	.9	-.900	1.8	.4	.297	.0005	13.5	.174	.076	.226	1.068
34	0	6	9	10	6	12	17	5.37	5.27	6.6	-.9000	-.900	.26	.110	-15.0	92.8	.030	-.900	-.900	-.900	.5	.5	-.900	.6	.5	.438	-.9000	5.4	.375	.241	.125	1.849
36	0	6	16	10	6	17	11	22.39	4.65	8.5	-.9000	-.900	.03	.010	23.3	63.0	.041	-.900	-.900	-.900	-.2	-.2	-.900	-.2	.4	.850	.0001	15.1	.375	.026	.025	1.363
37	0	9	10	6	9	12	10	11.48	4.94	13.0	-.9000	-.900	-.90	-.900	16.9	49.3	.216	-.900	-.900	-.900	-.2	.5	-.900	.9	1.3	.647	-.9000	7.2	1.174	-.900	.125	-.900
38	0	10	18	17	10	21	8	18.20	4.74	14.3	-.9000	-.900	.15	.038	21.5	36.8	.167	-.900	-.900	-.900	-.2	.4	-.900	.6	1.4	1.085	.0008	6.3	1.300	.135	.100	.913
39	0	10	21	12	10	24	17	10.47	4.98	5.2	-.0005	.004	.05	.016	-15.0	40.2	.040	.013	.001	.001	-.2	-.2	.005	.2	.2	.323	-.0001	13.3	.175	.046	.025	1.559
40	0	10	31	21	11	2	17	16.60	4.78	13.8	-.0005	.001	.04	.096	19.4	47.0	.072	.006	.001	.001	-.2	.7	.002	1.5	.4	.461	.0006	15.0	.224	.013	.176	1.093
41	0	11	2	17	11	3	19	8.91	5.05	6.9	-.0005	.003	.02	.033	-15.0	38.7	.032	.021	.003	.001	-.2	.2	.008	.6	.2	.403	.0007	34.2	.150	.012	.050	.930
42	0	11	5	9	11	7	17	10.72	4.97	23.7	-.0005	.005	.14	.310	-15.0	41.7	.037	.010	.003	.001	-.2	2.6	.011	4.9	.6	.230	.0001	10.2	0.000	.041	.653	1.042
43	0	11	15	10	11	16	17	11.22	4.95	9.5	-.0005	.002	.03	.065	-15.0	44.3	.019	.007	.001	-.001	-.2	.5	.008	1.0	-.2	.399	.0004	17.1	0.000	.011	.125	1.182
44	0	12	8	7	12	9	9	23.44	4.63	21.1	-.9000	-.900	.10	.210	21.2	53.9	.062	-.900	-.900	-.900	-.2	1.9	-.900	3.4	.9	1.041	-.9000	5.0	.423	.028	.477	1.022
45	0	1	4	9	1	5	10	4.57	5.34	3.4	-.9000	-.900	.08	.024	-15.0	42.4	.013	-.900	-.900	-.900	-.2	-.2	-.900	.2	-.2	.354	-.9000	4.3	.075	.076	.025	1.352
46	0	1	23	10	1	25	10	4.68	5.33	3.5	-.0005	.003	.03	.012	-15.0	56.5	.031	.019	.002	.003	-.2	-.2	.005	-.2	.2	.190	-.0001	10.9	.175	.026	.025	1.571
47	0	2	8	16	2	9	11	6.46	5.19	5.2	-.9000	-.900	.05	.007	-15.0	39.0	.048	-.900	-.900	-.900	-.2	-.2	-.900	.2	.2	.275	-.9000	7.3	.175	.046	.025	1.341
49	0	2	23	12	2	24	8	25.12	4.60	16.6	-.0005	.002	.06	.100	25.1	61.4	.190	.007	.002	-.001	-.2	.9	.003	1.5	1.1	.881	.0002	13.1	.874	.026	.226	1.115
50	0	2	27	9	2	28	13	10.72	4.97	11.6	-.9000	-.900	.27	.083	-15.0	54.9	.144	-.900	-.900	-.900	-.2	.6	-.900	.9	1.0	.487	.0003	7.4	.849	.247	.151	1.252
51	0	2	28	13	3	1	14	13.49	4.87	17.3	-.9000	-.900	.35	.170	22.5	74.8	.118	-.900	-.900	-.900	.2	1.2	-.900	1.9	1.0	1.329	-.9000	3.2	.699	.304	.301	1.135
52	0	3	16	10	3	20	14	22.91	4.64	15.9	-.0010	.005	.20	.080	28.9	82.1	.165	.025	.005	-.010	-.2	.5	.009	.8	1.3	.886	.0003	34.2	1.174	.181	.125	1.141
53	0	3	22	11	3	23	10	.81	6.09	6.7	-.9000	-.900	-.90	-.900	-15.0	65.9	-.003	-.900	-.900	-.900	-.2	-.2	-.900	.3	.3	.009	-.9000	5.8	.275	-.900	.025	-.900

LOWER MAINLAND ACID RAIN STUDY
****
SALTSPRING I. , B.C.
****
APR 84-MAY 84

(VALUES ARE EXPRESSED IN MG PER LITRE)

EVENT	PERIOD MO	DY	HR	MO	DY	HR	H+	PH	COND	CD	CU	CA++	MG++	S.ACID	T.ACID	NH4+	FE	PB	MN	K+	NA+	ZN	CL-	SO4--	NO3-	AS	CATCH	EXCESS SO4	CA	SEA SO4	+/-
54	0	4	7	9	4	10	10	6.17	5.21	31.4	-.0010	.006	-.90	-.900	25.0	147.0	.347	.020	.004	-.010	.5	3.3	.007	5.8	1.8	.385	.0005	10.7	.972	-.900	.828	-.900
55	0	5	18	9	5	20	12	30.20	4.52	18.2	-.0010	.005	.19	.050	37.0	83.8	.232	.080	.004	-.010	-.2	-.2	.006	.3	1.1	1.661	.0006	12.6	1.075	.186	.025	1.093
AVERAGES								12.55 (4.90)	4.98	12.4	-.0003	-.003	.10	.095	-15.6	55.4	-.074	.016	-.002	-.002	-.1	-.80	-.004	-1.41	-.65	.520	-.0004	14.0	.456	.072	.200	1.189

REMARKS : (1) UNKNOWN START OR END TIMES ARE DESIGNATED BY 99. (2) HYDROGEN ION VALUES (H+) ARE COMPUTED FROM THE MEASURED PH. THE AVERAGE PH IS AN ARITHMETIC AVERAGE WHILE THE NUMBER IN PARENTHESES IS THE AVERAGE PH COMPUTED FROM THE H+ VALUES. (3) CONDUCTANCE IS EXPRESSED IN MICRO-SIEMENS/CM., STRONG ACID, TOTAL ACID & H+ ARE EXPRESSED IN MICRO EQUIVALENTS/LITRE. (4) CD, CU, FE, PB, MN & ZN ARE EXTRACTABLE AMOUNTS. (5) MINUS SIGNS FLAG VALUES THAT ARE BELOW DETECTION LIMITS. WHEN THE AVERAGES ARE COMPUTED, 1/2 THE DETECTION LIMIT IS USED AND THE AVERAGE VALUE IS AGAIN FLAGGED WITH A MINUS SIGN. (6) MISSING DATA ARE DESIGNATED BY -.9. (7) THE CATCH AMOUNTS ARE CALCULATED FROM THE SAMPLE VOLUME AND ARE EXPRESSED IN MILLIMETRES OF RAINFALL, WITH A FULL SAMPLER BEING APPROX. 34 MM. (8) THE ION BALANCE (+/-) IS COMPUTED FROM THE SUM OF H+, CA++, MG++, NH4+, K+ & NA+ DIVIDED BY THE SUM OF CL-, SO4-- & NO3-. VALUES BELOW THE DETECTION LIMITS ARE HANDLED AS ABOVE.

LOWER MAINLAND ACID RAIN STUDY
****
SOOKE , B.C.
****
FEB 83-JUN 84

(VALUES ARE EXPRESSED IN MG PER LITRE)

EVENT	PERIOD MO	DY	HR	MO	DY	HR	H+	PH	COND	CD	CU	CA++	MG++	S.ACID	T.ACID	NH4+	FE	PB	MN	K+	NA+	ZN	CL-	SO4--	NO3-	AS	CATCH	EXCESS SO4	EXCESS CA	SEA SO4	+/-
25	0	2	10	9	2	11	9	8.13	5.09	12.1	-.0005	.005	.03	.065	-15.0	22.2	.014	.003	-.001	-.001	-.2	.6	.002	1.0	.2	.182	-.0001	16.1	.049	.007	.151	1.258
26	0	2	11	12	2	12	9	3.55	5.45	2.3	-.0005	.001	-.90	-.900	-15.0	30.3	.013	.002	.001	-.001	-.2	-.2	-.001	.2	-.2	.097	-.0001	20.7	.075	-.900	.025	-.900
27	0	2	16	21	2	17	14	7.24	5.14	10.6	-.9000	-.900	.04	.083	-15.0	39.7	.012	-.900	-.900	-.900	-.2	.8	-.900	1.6	.2	.164	-.0001	18.3	0.000	.010	.201	1.041
28	0	2	22	19	2	23	18	12.59	4.90	8.3	-.9000	-.900	.05	.043	-.9	-.9	.022	-.900	-.900	-.900	-.2	.5	-.900	.8	.3	.288	.0002	7.3	.175	.031	.125	1.320
29	0	3	5	18	3	7	19	2.14	5.67	12.2	-.9000	-.900	-.90	-.900	-.9	-.9	-.900	-.900	-.900	-.900	-.2	.5	-.900	.8	.7	-.900	.0001	3.8	.575	-.900	.125	-.900
30	0	3	8	9	3	9	9	9.33	5.03	8.0	-.9000	-.900	.02	.057	-15.0	45.3	.028	-.900	-.900	-.900	-.2	.5	-.900	.8	.2	.124	-.9000	16.0	.074	.001	.125	1.423
31	0	3	11	19	3	13	14	9.33	5.03	9.9	-.9000	-.900	.09	.093	-15.0	63.0	.018	-.900	-.900	-.900	-.2	.6	-.900	1.2	.3	.226	-.9000	7.4	.149	.067	.151	1.169
32	0	3	26	12	3	28	9	5.25	5.28	13.3	-.9000	-.900	-.90	-.900	-.9	-.9	.005	-.900	-.900	-.900	-.2	1.6	-.900	2.1	.8	.040	-.9000	3.3	.398	-.900	.402	-.900
33	0	3	29	9	3	30	9	3.31	5.48	12.6	-.9000	-.900	.15	.180	-15.0	34.3	.005	-.900	-.900	-.900	-.2	1.4	-.900	2.4	.3	.137	-.0001	18.8	0.000	.097	.351	1.173
34	0	6	9	9	6	10	9	4.37	5.36	7.8	-.9000	-.900	-.90	-.900	-.9	-.9	-.003	-.900	-.900	-.900	-.2	.7	-.900	1.0	.3	.226	-.9000	3.2	.124	-.900	.176	-.900
36	0	6	16	9	6	19	15	19.50	4.71	9.8	-.0005	.002	.05	.037	23.3	66.9	.060	.016	.003	.001	-.2	.2	-.001	.4	.4	.691	.0002	20.8	.350	.042	.050	1.288
37	0	9	9	22	9	12	8	10.96	4.96	8.3	-.0005	.003	.03	.038	17.6	46.2	.026	.018	.003	.001	-.2	.2	-.001	.5	.2	.354	-.0001	20.2	.150	.022	.050	1.180
38	0	10	18	12	10	20	8	5.13	5.29	5.3	-.9000	-.900	.04	.024	15.0	26.7	.013	-.900	-.900	-.900	-.2	-.2	-.900	.3	.2	.177	-.0001	11.7	.175	.036	.025	1.081
39	0	10	21	10	10	24	8	8.13	5.09	8.6	-.0005	.006	.04	.089	-15.0	28.8	.028	.060	.002	.011	-.2	.8	.002	1.3	.2	.279	-.0001	19.6	0.000	.010	.201	1.243
40	0	11	1	11	11	2	12	6.92	5.16	5.4	-.9000	-.900	.02	.024	-15.0	37.6	.059	-.900	-.900	-.900	-.2	-.2	-.900	.4	.2	.213	-.0001	13.4	.175	.016	.025	1.063
41	0	11	2	16	11	3	7	5.25	5.28	4.7	-.0005	-.001	.01	.030	-15.0	24.6	.004	.029	-.001	.001	-.2	.2	-.001	.5	-.2	.102	-.0001	29.0	.050	.002	.050	1.105
42	0	11	5	12	11	7	9	3.47	5.46	17.0	-.0005	.001	.08	.240	-15.0	33.8	.006	.003	.002	-.001	-.2	2.0	.002	3.8	-.2	.058	-.0001	21.6	0.000	.004	.502	1.063
43	0	11	15	9	11	16	12	4.47	5.35	7.3	-.0005	-.001	-.01	.007	-15.0	35.8	.004	.004	.002	-.001	-.2	-.2	-.001	.2	-.2	.106	.0001	19.7	.075	.001	.025	1.317
44	0	12	7	10	12	9	9	8.91	5.05	13.5	-.0005	.001	.05	.160	-15.0	40.9	.010	.001	.002	-.001	-.2	1.2	.003	2.5	.2	.168	-.0001	26.6	0.000	.004	.301	1.032
45	0	1	4	9	1	5	9	8.91	5.05	4.1	-.9000	-.900	.01	.015	-15.0	33.7	-.003	-.900	-.900	-.900	-.2	-.2	-.900	.3	-.2	.350	-.0001	13.4	.075	.006	.025	1.089
46	0	1	23	9	1	25	9	4.37	5.36	7.7	.0011	.001	.05	.094	-15.0	51.0	-.003	.020	.004	-.001	-.2	.8	-.001	1.4	-.2	.089	-.0001	34.2	0.000	.020	.201	1.210
47	0	2	8	12	2	9	9	-.90	-.90	-.9	-.9000	-.900	-.90	-.900	26.7	50.4	-.900	-.900	-.900	-.900	-.2	1.0	-.900	1.8	-.9	-.900	-.9000	1.6	-.900	-.900	.251	-.900
48	0	2	17	19	2	20	9	4.68	5.33	2.6	-.0005	.002	.03	-.005	-15.0	29.5	.010	.041	.003	.002	-.2	-.2	.005	-.2	-.2	.173	-.0001	19.3	.075	.026	.025	1.799
50	0	2	27	14	2	28	14	-.90	-.90	-.9	-.9000	-.900	-.90	-.900	-.9	-.9	.127	-.900	-.900	-.900	.2	1.9	-.900	3.6	.2	1.085	-.9000	1.4	0.000	-.900	.477	-.900
51	0	2	29	10	3	2	8	4.79	5.32	7.4	-.9000	-.900	.14	.078	-15.0	40.8	-.003	-.900	-.900	-.900	-.2	.5	-.900	1.0	-.9	.190	-.9000	10.3	-.900	.121	.125	-.900
52	0	3	16	9	3	20	9	4.37	5.36	-.9	-.9000	-.900	-.90	-.900	21.8	76.4	.135	-.900	-.900	-.900	.2	1.7	-.900	2.9	.8	.607	-.0001	15.1	.373	-.900	.427	-.900
53	0	3	22	9	3	23	12	-.90	-.90	-.9	-.9000	-.900	-.90	-.900	-.9	-.9	-.003	-.900	-.900	-.900	-.2	.7	-.900	1.0	.5	.438	-.9000	4.6	.324	-.900	.176	-.900
54	0	4	7	16	4	10	9	10.00	5.00	24.3	-.0010	.002	-.90	-.900	16.4	74.0	.013	.003	.002	-.010	-.2	2.6	.005	4.7	.8	.266	.0002	21.9	.147	-.900	.653	-.900
55	0	5	18	9	5	20	12	19.05	4.72	10.5	-.9000	-.900	.13	.066	19.2	49.0	.113	.900	-.900	-.900	-.2	.5	-.900	.8	.4	.580	-.0001	18.8	.275	.111	.125	1.517
56	0	6	28	8	6	29	7	10.72	4.97	6.4	-.9000	-.900	-.90	-.900	-15.0	48.2	.064	-.900	-.900	-.900	-.2	-.2	-.900	-.2	.2	.571	.0002	15.0	.175	-.900	.025	-.900

LOWER MAINLAND ACID RAIN STUDY
****
SOOKE , B.C.
****
FEB 83-JUN 84

(VALUES ARE EXPRESSED IN MG PER LITRE)

PERIOD EVENT	MO DY HR	MO DY HR	H+	PH	COND	CD	CU	CA++	MG++	S.ACID	T.ACID	NH4+	FE	PB	MN	K+	NA+	ZN	CL-	SO4--	NO3-	AS	CATCH	EXCESS SO4	CA	SEA SO4	+/-
AVERAGES			7.59	5.18 (5.12)	9.2	-.0003	-.002	-.05	-.071	-11.1	42.9	-.028	.085	-.002	-.002	-.1	-.74	-.002	-1.32	-.30	.285	-.0001	15.1	.144	.032	.186	1.230

REMARKS : (1) UNKNOWN START OR END TIMES ARE DESIGNATED BY 99. (2) HYDROGEN ION VALUES (H+) ARE COMPUTED FROM THE MEASURED PH. THE AVERAGE PH IS AN ARITHMETIC AVERAGE WHILE THE NUMBER IN PARENTHESES IS THE AVERAGE PH COMPUTED FROM THE H+ VALUES. (3) CONDUCTANCE IS EXPRESSED IN MICRO-SIEMENS/CM., STRONG ACID, TOTAL ACID & H+ ARE EXPRESSED IN MICRO EQUIVALENTS/LITRE. (4) CD, CU, FE, PB, MN & ZN ARE EXTRACTABLE AMOUNTS. (5) MINUS SIGNS FLAG VALUES THAT ARE BELOW DETECTION LIMITS. WHEN THE AVERAGES ARE COMPUTED, 1/2 THE DETECTION LIMIT IS USED AND THE AVERAGE VALUE IS AGAIN FLAGGED WITH A MINUS SIGN. (6) MISSING DATA ARE DESIGNATED BY -.9. (7) THE CATCH AMOUNTS ARE CALCULATED FROM THE SAMPLE VOLUME AND ARE EXPRESSED IN MILLIMETRES OF RAINFALL, WITH A FULL SAMPLER BEING APPROX. 34 MM. (8) THE ION BALANCE (+/-) IS COMPUTED FROM THE SUM OF H+, CA++, MG++, NH4+, K+ & NA+ DIVIDED BY THE SUM OF CL-, SO4-- & NO3-. VALUES BELOW THE DETECTION LIMITS ARE HANDLED AS ABOVE.

LOWER MAINLAND ACID RAIN STUDY
****
TERRACE , B.C.
****
MAR 82-JUN 83

(VALUES ARE EXPRESSED IN MG PER LITRE)

	PERIOD																												EXCESS		SEA	
EVENT	MO	DY	HR	MO	DY	HR	H+	PH	COND	CD	CU	CA++	MG++	S.ACID	T.ACID	NH4+	FE	PB	MN	K+	NA+	ZN	CL-	SO4--	NO3-	AS	CATCH	SO4	CA	SO4	+/-
0	0	3	24	14	3	25	12	10.00	5.00	5.2	-.0005	.003	-.90	-.900	-15.0	38.6	.027	.019	.005	.006	-.2	-.2	.005	-.2	.2	.173	-.9000	-.9	.175	-.900	.025	-.900
0	0	4	14	9	4	16	10	.98	6.01	5.4	-.0005	-.900	.16	.063	-15.0	27.5	.009	-.900	-.900	-.900	.6	.2	-.900	.5	.8	.062	-.9000	-.9	.750	.152	.050	1.218
0	0	4	21	17	4	22	10	12.88	4.89	8.2	-.0005	.003	.15	.025	16.3	46.2	.039	.032	.004	.008	.2	.3	.002	.4	.7	.695	-.9000	-.9	.625	.139	.075	1.153
0	0	4	27	9	4	28	10	5.37	5.27	3.0	-.0005	.003	.03	-.005	-15.0	33.8	.013	.004	-.001	.003	-.2	-.2	.001	-.2	.2	.102	-.9000	-.9	.175	.026	.025	1.704
0	0	4	29	10	4	30	10	6.76	5.17	3.9	-.0005	.002	.03	.006	-15.0	34.7	.022	.005	-.001	-.001	-.2	-.2	.004	.2	.3	.066	-.9000	-.9	.275	.026	.025	1.303
0	0	4	30	10	5	1	9	5.01	5.30	2.4	-.0005	.001	.01	-.005	-15.0	27.2	.004	.001	-.001	-.001	-.2	-.2	-.001	-.2	-.2	.053	-.9000	-.9	.075	.006	.025	2.231
0	0	5	18	99	5	19	99	4.79	5.32	8.0	-.9000	-.900	.35	.064	-15.0	43.1	-.003	-.900	-.900	-.900	-.2	.4	-.900	.5	1.1	.230	-.9000	-.9	1.000	.335	.100	1.168
0	0	5	19	99	5	20	99	7.59	5.12	5.0	-.0005	.004	.08	.009	-15.0	37.8	.012	.037	.002	.005	-.2	-.2	.001	-.2	.5	.142	-.9000	-.9	.475	.076	.025	1.282
0	0	5	23	99	5	24	7	15.85	4.80	11.3	-.0005	.007	.17	.038	20.2	49.1	.037	.040	.005	.003	-.2	.5	.002	.5	1.3	.235	-.9000	-.9	1.174	.151	.125	1.197
0	0	5	24	7	6	20	7	3.16	5.50	3.3	-.0005	-.001	.03	-.005	20.2	33.7	.014	.006	.002	.001	-.2	-.2	.001	.2	.3	.230	-.9000	-.9	.275	.026	.025	.805
0	0	6	20	7	6	27	7	4.47	5.35	8.1	-.9000	-.900	.44	.059	18.8	79.8	.006	-.900	-.900	-.900	-.2	.2	-.900	.4	1.1	.093	-.9000	-.9	1.050	.432	.050	1.201
0	0	6	27	7	6	28	9	.50	6.30	2.8	-.0005	.002	.03	-.005	-15.0	26.0	-.003	.010	.003	.002	-.2	-.2	.003	.2	-.2	.049	-.9000	-.9	.075	.026	.025	1.080
0	0	7	13	7	7	14	9	7.24	5.14	6.9	-.0005	.005	.05	.011	21.0	45.1	.037	.015	.006	.005	-.2	.2	.004	.2	.7	.257	-.9000	-.9	.650	.042	.050	.983
0	0	9	4	8	9	6	9	2.75	5.56	3.5	-.0005	.001	.09	.008	-15.0	23.1	.075	.001	-.001	.010	-.2	-.2	.004	-.2	.3	.115	-.9000	-.9	.275	.086	.025	1.737
0	0	9	6	9	9	8	9	6.61	5.18	2.7	-.0005	-.001	.01	.006	-15.0	25.6	-.003	.001	-.001	-.001	-.2	-.2	.001	-.2	.2	.106	-.9000	-.9	.175	.006	.025	1.678
0	0	9	8	9	9	12	9	16.22	4.79	7.8	-.0005	-.001	.03	.005	20.1	41.9	.064	.005	.004	.001	-.2	.2	.004	.3	1.0	.177	-.9000	-.9	.950	.022	.050	1.025
0	0	10	4	6	10	6	9	5.62	5.25	2.6	-.0005	.001	.01	-.005	-15.0	26.5	-.003	.002	-.001	.001	-.2	-.2	.002	-.2	-.2	.049	-.9000	-.9	.075	.006	.025	2.340
0	0	10	8	7	10	10	9	4.68	5.33	2.6	-.0005	.001	-.01	-.005	-15.0	14.8	-.003	.002	.001	-.001	-.2	-.2	.005	-.2	-.2	.115	-.9000	-.9	.075	.001	.025	1.794
0	0	10	10	9	10	16	9	14.45	4.84	7.1	-.0005	.002	.03	-.005	18.7	49.6	.026	.004	.002	.002	-.2	.2	.009	.3	.7	.244	-.9000	-.9	.650	.022	.050	1.070
0	0	10	21	8	10	24	10	4.17	5.38	2.1	-.0005	.003	-.01	-.005	-15.0	20.6	-.003	.004	.005	-.001	-.2	-.2	.008	-.2	-.2	.115	-.9000	-.9	.075	.001	.025	1.719
0	0	10	26	12	10	28	9	5.50	5.26	3.0	-.0005	.005	.03	.007	-15.0	30.2	-.003	.004	.001	.003	-.2	-.2	.004	-.2	-.2	.040	-.9000	-.9	.075	.026	.025	2.624
0	0	10	29	7	11	4	9	3.80	5.42	2.3	-.0005	.002	.01	-.005	-15.0	31.4	-.003	.005	.007	-.001	-.2	-.2	.002	-.2	-.2	.097	-.9000	-.9	.075	.006	.025	1.778
0	0	11	4	12	11	6	16	8.91	5.05	5.7	-.9000	-.900	.03	.034	-15.0	25.3	.003	-.900	-.900	-.900	-.2	.2	-.900	.3	-.2	.102	-.9000	-.9	.050	.022	.050	2.021
0	0	1	2	8	1	8	3	4.68	5.33	3.7	-.0005	.001	-.01	.019	-15.0	28.8	.048	.004	.005	-.001	-.2	-.2	.004	.3	-.2	.120	-.9000	-.9	.075	.001	.025	1.287
0	0	2	23	17	2	24	9	3.72	5.43	8.5	-.9000	-.900	.16	.019	-15.0	37.6	.035	-.900	-.900	-.900	-.2	.7	-.900	.9	.7	.177	.0002	-.9	.524	.133	.176	1.126
0	0	3	8	13	3	10	9	3.63	5.44	4.5	-.0005	.002	.04	.010	-15.0	33.7	.019	.070	.003	.004	-.2	-.2	.006	-.2	-.2	.128	-.0001	-.9	.075	.036	.025	2.068
0	0	3	10	9	3	11	9	3.39	5.47	5.2	-.9000	-.900	.09	.018	-15.0	32.6	.019	-.900	-.900	-.900	-.2	-.2	-.900	.2	-.2	.102	-.0001	-.9	.075	.086	.025	1.849
0	0	4	4	16	4	6	9	6.31	5.20	5.2	-.0005	.011	.11	.023	-15.0	50.1	.027	.070	.005	.014	-.2	.2	.008	-.2	.6	.142	-.0001	-.9	.550	.102	.050	1.502
0	0	6	3	9	6	5	7	10.00	5.00	5.2	-.0005	.004	.10	.025	-15.0	68.9	-.003	.013	.002	.006	-.2	-.2	.006	-.2	.6	.133	-.0001	-.9	.575	.096	.025	1.377
0	0	6	8	11	6	10	8	13.80	4.86	6.9	-.0005	.002	.04	.005	16.7	50.4	.032	.035	.004	.006	-.2	-.2	.011	-.2	.4	.208	-.9000	-.9	.375	.036	.025	1.716

LOWER MAINLAND ACID RAIN STUDY
****
TERRACE , B.C.
****
JUN 83-NOV 83

(VALUES ARE EXPRESSED IN MG PER LITRE)

EVENT	PERIOD MO	DY	HR	MO	DY	HR	H+	PH	COND	CD	CU	CA++	MG++	S.ACID	T.ACID	NH4+	FE	PB	MN	K+	NA+	ZN	CL-	SO4--	NO3-	AS	CATCH	EXCESS SO4	EXCESS CA	SEA SO4	+/-
0	0	6	10	15	6	13	13	15.14	4.82	6.9	-.0005	.002	.02	-.005	19.8	44.1	-.003	.001	-.001	.001	-.2	-.2	-.001	-.2	.2	.190	-.9000	-.9	.175	.016	.025	2.322
0	0	6	13	13	6	29	8	13.18	4.88	6.5	.0008	.003	.09	.019	16.2	50.9	-.003	.027	.002	.004	-.2	-.2	.004	-.2	.3	.199	-.0001	-.9	.275	.086	.025	2.137
0	0	7	6	13	7	8	9	7.08	5.15	3.2	-.0005	.001	.01	.011	-15.0	41.0	.006	.013	-.001	-.900	-.2	-.2	-.001	-.2	-.2	.093	-.0001	-.9	.075	.006	.025	2.456
0	0	7	9	13	7	13	8	8.13	5.09	5.4	-.0005	.003	.02	.009	-15.0	41.6	.018	.012	-.001	-.900	-.2	-.2	.002	.2	.2	.128	-.0001	-.9	.175	.016	.025	1.460
0	0	7	13	8	7	30	8	11.22	4.95	7.1	-.0005	.004	.07	.008	18.5	90.0	.021	.031	.001	-.001	-.2	-.2	.005	.2	.4	.164	-.0001	-.9	.375	.066	.025	1.411
0	0	7	30	99	8	7	99	9.12	5.04	4.3	-.0005	.003	.04	.008	15.4	67.7	-.003	.031	.002	-.001	-.2	-.2	.002	-.2	.2	.128	-.0001	-.9	.175	.036	.025	2.074
0	0	8	7	99	8	27	99	18.20	4.74	9.9	.0015	.005	.04	.016	23.7	59.8	.023	.022	.004	.002	-.2	-.2	.002	.2	.5	.301	-.0001	-.9	.475	.036	.025	1.420
0	0	9	12	8	9	13	12	3.89	5.41	3.1	-.0005	-.001	.01	-.005	-15.0	31.2	.017	.014	.002	-.001	-.2	-.2	.002	-.2	-.2	.120	.0001	-.9	.075	.006	.025	1.828
0	0	9	14	14	9	16	8	8.91	5.05	4.6	-.0005	-.001	.02	-.005	-15.0	31.5	.004	.014	.002	.004	-.2	-.2	-.001	-.2	.2	.111	-.0001	-.9	.175	.016	.025	1.965
0	0	9	25	14	9	26	9	2.75	5.56	2.2	-.9000	-.900	-.01	-.005	-15.0	29.2	.003	-.900	-.900	-.900	-.2	-.2	-.900	-.2	-.2	.027	-.0001	-.9	.075	.001	.025	1.926
0	0	10	8	10	10	17	8	1.51	5.82	8.5	-.0005	.004	.18	.027	15.2	33.5	.014	.080	.003	.010	.2	.8	.011	.7	.8	.213	-.0001	-.9	.599	.150	.201	1.341
0	0	10	17	8	10	19	9	5.62	5.25	4.0	-.0005	.001	.02	.007	-15.0	40.3	.017	.039	.002	.010	-.2	-.2	.001	.2	.2	.058	-.0001	-.9	.175	.016	.025	1.401
0	0	10	19	9	10	20	8	7.59	5.12	3.8	-.0005	-.900	.02	.017	-15.0	7.5	.017	-.900	-.900	-.900	-.2	-.2	-.900	.3	-.2	.089	-.0001	-.9	.075	.016	.025	1.489
0	0	10	20	8	10	21	8	5.25	5.28	3.4	-.0005	-.001	.03	.007	-15.0	16.1	.021	.005	.001	.003	-.2	-.2	.007	-.2	-.2	.080	-.0001	-.9	.075	.026	.025	2.486
0	0	10	22	9	10	25	9	1.95	5.71	4.2	-.0005	-.001	.09	.050	-15.0	36.0	.003	.030	.001	.005	-.2	.3	-.001	.6	-.2	.089	-.0001	-.9	.025	.079	.075	1.375
0	0	10	25	9	10	26	9	1.86	5.73	2.7	-.0005	.002	-.01	-.005	-15.0	28.1	.009	.042	.002	.001	-.2	-.2	.002	.3	-.2	.040	-.0001	-.9	.075	.001	.025	.869
0	0	10	26	9	10	30	8	1.38	5.86	3.0	-.0005	.005	.22	.022	-15.0	39.0	-.003	.150	.007	.030	-.2	-.2	.002	-.2	-.2	.053	-.0001	-.9	.075	.216	.025	3.675
0	0	11	2	11	11	3	9	3.09	5.51	3.5	-.0005	-.001	.02	.022	-15.0	31.8	-.003	.034	.001	.007	-.2	-.2	-.001	.4	-.2	-.009	-.0001	-.9	.075	.016	.025	.959
0	0	11	3	9	11	4	9	3.72	5.43	3.4	-.0005	.001	.01	.023	-15.0	21.9	.009	.020	.001	.002	-.2	-.2	-.001	.4	-.2	.044	.0003	-.9	.075	.006	.025	.960
0	0	11	4	9	11	11	16	8.71	5.06	5.7	-.0005	.001	.04	.024	-15.0	55.8	.021	.013	.004	.006	-.2	.2	.002	.3	-.2	.213	-.0001	-.9	.050	.032	.050	1.796
0	0	11	14	14	11	17	9	4.57	5.34	6.3	-.0005	-.001	.01	-.005	-15.0	48.2	.003	.009	.002	.001	-.2	-.2	.002	-.2	-.2	.093	-.0001	-.9	.075	.006	.025	1.929
AVERAGES								6.78 (5.17)	5.27	5.0	-.0003	-.002	-.07	-.015	-10.6	38.4	-.015	.023	-.003	-.004	-.1	-.16	-.003	-.23	-.33	-.136	-.0001	-.9	.292	.060	.041	1.626

REMARKS : (1) UNKNOWN START OR END TIMES ARE DESIGNATED BY 99. (2) HYDROGEN ION VALUES (H+) ARE COMPUTED FROM THE MEASURED PH. THE AVERAGE PH IS AN ARITHMETIC AVERAGE WHILE THE NUMBER IN PARENTHESES IS THE AVERAGE PH COMPUTED FROM THE H+ VALUES. (3) CONDUCTANCE IS EXPRESSED IN MICRO-SIEMENS/CM., STRONG ACID, TOTAL ACID & H+ ARE EXPRESSED IN MICRO EQUIVALENTS/LITRE. (4) CD, CU, FE, PB, MN & ZN ARE EXTRACTABLE AMOUNTS. (5) MINUS SIGNS FLAG VALUES THAT ARE BELOW DETECTION LIMITS. WHEN THE AVERAGES ARE COMPUTED, 1/2 THE DETECTION LIMIT IS USED AND THE AVERAGE VALUE IS AGAIN FLAGGED WITH A MINUS SIGN. (6) MISSING DATA ARE DESIGNATED BY -.9. (7) THE CATCH AMOUNTS ARE CALCULATED FROM THE SAMPLE VOLUME AND ARE EXPRESSED IN MILLIMETRES OF RAINFALL, WITH A FULL SAMPLER BEING APPROX. 34 MM. (8) THE ION BALANCE (+/-) IS COMPUTED FROM THE SUM OF H+, CA++, MG++, NH4+, K+ & NA+ DIVIDED BY THE SUM OF CL-, SO4-- & NO3-. VALUES BELOW THE DETECTION LIMITS ARE HANDLED AS ABOVE.

LOWER MAINLAND ACID RAIN STUDY
****
T-2 , B.C.
****
JAN 82-JAN 83
(VALUES ARE EXPRESSED IN MG PER LITRE)

EVENT	PERIOD MO	DY	HR	MO	DY	HR	H+	PH	COND	CD	CU	CA++	MG++	S.ACID	T.ACID	NH4+	FE	PB	MN	K+	NA+	ZN	CL-	SO4--	NO3-	AS	CATCH	EXCESS SO4	CA	SEA SO4	+/-
1	0	1	15	99	1	18	99	7.76	5.11	8.2	-.0005	.004	.04	.050	-15.0	44.4	.175	.006	.005	.001	-.2	.5	.001	.7	.9	.386	-.9000	-.9	.775	.021	.125	1.103
2	0	1	22	99	1	25	99	8.32	5.08	8.3	-.0005	.004	.11	.026	-15.0	34.9	.595	.006	.011	-.001	-.2	-.2	.003	.4	1.3	.337	-.9000	-.9	1.275	.106	.025	1.275
3	0	1	25	8	1	26	8	10.96	4.96	11.1	-.0005	.003	.06	.064	-15.0	40.2	.211	.005	.007	.001	-.2	.6	.002	1.1	1.0	.354	-.9000	-.9	.849	.037	.151	1.035
4	5	1	29	9	2	1	11	16.22	4.79	16.7	-.0005	.005	.26	.060	19.4	49.5	.643	.005	.019	.005	-.2	.5	.007	.8	2.2	.709	-.9000	-.9	2.024	.241	.125	1.179
7	0	2	11	99	2	12	13	4.47	5.35	25.6	-.9000	-.900	.71	.110	-15.0	40.8	1.929	-.900	-.900	-.900	-.2	.8	-.900	1.4	4.6	1.639	-.9000	-.9	4.399	.680	.201	1.195
8	0	2	12	13	2	15	99	14.13	4.85	9.2	-.0005	.003	.04	.016	16.9	47.1	.283	.007	.008	.001	-.2	-.2	.001	.2	1.0	.554	-.9000	-.9	.975	.036	.025	1.131
9	0	2	16	99	2	17	99	2.45	5.61	-.9	-.9000	-.900	-.90	-.900	-15.0	36.0	-.900	-.900	-.900	-.900	-.9	-.9	-.900	-.9	-.9	-.900	-.9000	-.9	-.900	-.900	-.900	-.900
10	0	2	23	99	2	25	99	19.05	4.72	20.5	-.0005	.009	.38	.061	24.7	61.7	.601	.100	.030	.006	-.2	.5	.012	.9	2.1	1.253	-.9000	-.9	1.974	.361	.125	1.127
11	0	2	26	14	3	1	11	15.14	4.82	12.5	-.0005	.002	.14	.022	18.4	48.0	.373	.001	-.001	.003	-.2	-.2	-.001	.4	1.2	.846	-.9000	-.9	1.175	.136	.025	1.032
12	0	3	11	99	3	12	99	7.41	5.13	21.5	-.0005	.004	.69	.180	-15.0	50.1	.579	.033	.030	.007	-.2	1.4	.011	2.3	2.6	1.218	-.9000	-.9	2.249	.637	.351	1.098
14	0	8	10	13	8	13	14	5.13	5.29	10.5	-.0005	.006	.60	.028	-15.0	31.9	.270	.012	.050	.005	-.2	-.2	.005	.3	1.9	.709	-.9000	-.9	1.875	.596	.025	.997
15	0	9	3	16	9	7	9	15.85	4.80	9.9	-.0005	.004	.13	.015	19.5	48.8	.177	.007	.019	.001	-.2	-.2	.007	.2	1.2	.766	-.9000	-.9	1.175	.126	.025	.937
0	0	9	7	9	9	13	13	15.49	4.81	16.5	-.0005	.005	.31	.038	21.1	60.8	1.492	.020	.033	.008	-.2	-.2	.018	.4	1.8	2.494	-.9000	-.9	1.775	.306	.025	1.390
16	0	9	24	8	9	27	9	7.94	5.10	-.9	-.9000	-.900	-.90	-.900	-.9	-.9	3.215	-.900	-.900	-.900	.3	.7	-.900	1.6	8.0	5.935	-.9000	-.9	7.824	-.900	.176	-.900
17	0	10	1	15	10	4	15	9.12	5.04	11.0	-.0005	.005	.37	.027	-15.0	61.6	.711	.014	.030	.005	-.2	.2	.009	.3	4.9	.957	-.9000	-.9	4.850	.362	.050	.639
18	0	10	5	16	10	6	9	21.88	4.66	13.5	-.0005	.003	.18	.051	26.5	66.5	.364	.013	.017	.007	-.2	.3	.007	.6	1.9	1.183	-.9000	-.9	1.825	.169	.075	.938
19	0	10	21	8	10	22	8	5.13	5.29	9.5	-.0005	.002	.12	.076	-15.0	34.2	.810	.022	.015	.001	-.2	.6	.006	1.1	1.0	.465	-.9000	-.9	.849	.097	.151	1.532
0	0	11	4	9	11	5	11	4.57	5.34	13.1	.0010	.006	.21	.074	-15.0	48.5	.387	.020	.012	-.001	-.2	.8	.020	1.3	1.2	.793	-.9000	-.9	.999	.180	.201	1.074
21	0	12	2	8	12	7	10	14.79	4.83	8.9	-.0005	.002	.03	.014	18.5	52.6	.170	.020	.004	.001	-.2	-.2	.004	.2	.6	.478	-.9000	-.9	.575	.026	.025	1.307
22	0	12	16	8	12	17	9	3.16	5.50	30.8	-.9000	-.900	-.90	-.900	-.9	-.9	.804	-.900	-.900	-.900	-.2	2.1	-.900	3.8	3.3	2.967	-.9000	-.9	2.773	-.900	.527	-.900
23	0	12	20	14	12	21	9	10.72	4.97	11.5	-.9000	-.900	.23	.046	-15.0	39.1	.554	-.900	-.900	-.900	-.2	.4	-.900	.6	1.6	.859	-.9000	-.9	1.500	.215	.100	1.196
24	0	1	7	9	1	10	16	9.33	5.03	7.2	-.0005	.002	.06	.036	-15.0	35.1	.105	.007	.009	.002	-.2	.2	.004	.5	.4	.235	-.9000	-.9	.350	.052	.050	1.234
AVERAGES								10.41 (4.98)	5.05	13.8	-.0003	.004	.25	.052	-12.8	46.6	.688	.018	-.018	-.003	-.1	-.49	-.007	.91	2.13	1.193	-.9000	-.9	2.005	.231	.123	1.127

LOWER MAINLAND ACID RAIN STUDY
****
T-6 , B.C.
****
JAN 82-JAN 83
(VALUES ARE EXPRESSED IN MG PER LITRE)

EVENT	PERIOD MO	DY	HR	MO	DY	HR	H+	PH	COND	CD	CU	CA++	MG++	S.ACID	T.ACID	NH4+	FE	PB	MN	K+	NA+	ZN	CL-	SO4--	NO3-	AS	CATCH	EXCESS SO4	CA	SEA SO4	+/-
1	0	1	15	99	1	18	99	26.30	4.58	15.2	-.0005	.003	.05	.050	27.6	55.3	.067	.009	.005	.001	-.2	.6	.008	.9	1.3	.350	-.9000	-.9	1.149	.027	.151	1.124
2	0	1	22	99	1	25	99	13.18	4.88	7.3	-.0005	.003	.02	.023	16.9	39.8	.022	.006	.003	-.001	-.2	.2	.011	.4	.4	.204	-.9000	-.9	.350	.012	.050	1.247
3	0	1	25	8	1	26	8	25.12	4.60	17.3	.0014	.007	.10	.055	27.5	52.6	.080	.025	.008	.003	-.2	.6	.480	1.1	1.3	.430	-.9000	-.9	1.149	.077	.151	1.041
4	5	1	29	9	2	1	8	22.91	4.64	17.8	-.0005	.009	.30	.072	24.9	55.5	.138	.012	.021	.004	-.2	.7	.050	1.1	1.7	.797	-.9000	-.9	1.524	.273	.176	1.065
7	0	2	11	99	2	12	9	2.00	5.70	28.3	-.9000	-.900	2.40	.140	-15.0	40.7	.203	-.900	-.900	-.900	-.2	2.1	-.900	2.5	3.5	1.794	-.9000	-.9	2.973	2.320	.527	1.384
8	0	2	12	9	2	15	10	27.54	4.56	14.7	.0009	.007	.16	.031	29.4	60.3	.058	.070	.004	.001	-.2	.3	.016	.5	1.3	.509	-.9000	-.9	1.225	.149	.075	1.152
9	0	2	16	16	2	17	11	29.51	4.53	21.8	-.9000	-.900	-.90	-.900	38.0	74.8	.117	-.900	-.900	-.900	-.9	-.9	-.900	-.9	2.0	.638	-.9000	-.9	-.900	-.900	-.900	-.900
10	0	2	23	16	2	24	13	51.29	4.29	38.0	-.9000	-.900	.42	.110	58.7	100.6	.202	-.900	-.900	-.900	-.2	1.3	-.900	2.2	2.4	2.050	-.9000	-.9	2.074	.371	.326	1.045
10	0	2	24	13	2	25	11	18.62	4.73	17.1	-.9000	-.900	.39	.033	22.5	53.2	.135	-.900	-.900	-.900	-.2	.7	-.900	.8	1.6	.797	-.9000	-.9	1.424	.363	.176	1.183
11	0	2	26	16	3	1	8	12.02	4.92	10.9	-.0005	.004	.27	.014	16.3	44.7	.073	.020	.004	.005	-.2	.5	.012	.5	.9	.593	-.9000	-.9	.775	.251	.125	1.297
12	0	3	11	99	3	12	99	7.41	5.13	11.9	-.0005	.005	.63	.041	-15.0	42.9	.084	.080	.010	.002	-.2	.6	.017	.9	1.5	.536	-.9000	-.9	1.349	.607	.151	1.157
0	0	8	5	15	8	12	10	.65	6.19	-.9	-.9000	-.900	-.90	-.900	-15.0	36.8	.804	-.900	-.900	-.900	-.9	-.9	-.900	-.9	-.9	2.436	-.9000	-.9	-.900	-.900	-.900	-.900
14	0	8	12	10	8	13	8	.24	6.62	14.3	.0017	.010	1.60	.036	-15.0	14.5	.095	.080	.005	.020	-.2	.4	.040	.7	2.1	.682	-.9000	-.9	2.000	1.585	.100	1.454
17	0	10	1	15	10	4	15	.39	6.41	12.3	.0006	.003	1.20	.019	-15.0	43.0	.204	.025	.007	.003	.3	.3	.020	.6	1.5	.784	-.9000	-.9	1.425	1.189	.075	1.544
18	0	10	5	15	10	6	10	10.00	5.00	14.3	.0005	.005	-.90	-.900	15.3	51.9	.213	.023	.007	.008	-.2	.5	.040	.8	2.0	1.298	-.9000	-.9	1.875	-.900	.125	-.900
19	0	10	21	7	10	22	8	4.07	5.39	8.8	-.0005	.010	.42	.036	-15.0	29.7	.120	.007	.009	.001	-.2	.5	.050	.9	1.1	.297	-.9000	-.9	.974	.401	.125	1.111
20	0	11	3	15	11	4	16	13.49	4.87	17.8	.0019	.008	.56	.060	17.8	53.6	.225	.100	.018	.002	-.2	.7	.050	.9	1.9	1.355	-.9000	-.9	1.724	.533	.176	1.058
21	0	12	2	16	12	3	8	14.79	4.83	8.4	.0006	.005	.08	.022	18.7	48.2	.036	.023	.003	-.001	-.2	.3	.022	.4	.4	.279	-.9000	-.9	.325	.069	.075	1.584
23	0	12	20	16	12	21	12	21.88	4.66	16.2	-.9000	-.900	.24	.033	28.0	42.4	.082	-.900	-.900	-.900	-.2	.8	-.900	.9	1.5	.704	-.9000	-.9	1.299	.210	.201	1.155
24	0	1	7	10	1	7	15	9.55	5.02	6.4	-.9000	-.900	.14	.019	-15.0	38.5	.040	-.900	-.900	-.900	-.2	.3	-.900	.6	.4	.301	-.9000	-.9	.325	.129	.075	1.193
AVERAGES								15.55 (4.81)	5.08	15.7	-.0007	.006	.53	.047	-19.7	48.9	.150	.037	.008	-.004	-.1	.63	.063	.93	1.52	.842	-.9000	-.9	1.330	.504	.159	1.223

REMARKS : (1) UNKNOWN START OR END TIMES ARE DESIGNATED BY 99. (2) HYDROGEN ION VALUES (H+) ARE COMPUTED FROM THE MEASURED PH. THE AVERAGE PH IS AN ARITHMETIC AVERAGE WHILE THE NUMBER IN PARENTHESES IS THE AVERAGE PH COMPUTED FROM THE H+ VALUES. (3) CONDUCTANCE IS EXPRESSED IN MICRO-SIEMENS/CM., STRONG ACID, TOTAL ACID & H+ ARE EXPRESSED IN MICRO EQUIVALENTS/LITRE. (4) CD, CU, FE, PB, MN & ZN ARE EXTRACTABLE AMOUNTS. (5) MINUS SIGNS FLAG VALUES THAT ARE BELOW DETECTION LIMITS. WHEN THE AVERAGES ARE COMPUTED, 1/2 THE DETECTION LIMIT IS USED AND THE AVERAGE VALUE IS AGAIN FLAGGED WITH A MINUS SIGN. (6) MISSING DATA ARE DESIGNATED BY -.9. (7) THE CATCH AMOUNTS ARE CALCULATED FROM THE SAMPLE VOLUME AND ARE EXPRESSED IN MILLIMETRES OF RAINFALL, WITH A FULL SAMPLER BEING APPROX. 34 MM. (8) THE ION BALANCE (+/-) IS COMPUTED FROM THE SUM OF H+, CA++, MG++, NH4+, K+ & NA+ DIVIDED BY THE SUM OF CL-, SO4-- & NO3-. VALUES BELOW THE DETECTION LIMITS ARE HANDLED AS ABOVE.

LOWER MAINLAND ACID RAIN STUDY
****
T-7 , B.C.
****
JAN 82-NOV 82
(VALUES ARE EXPRESSED IN MG PER LITRE)

EVENT	PERIOD MO	DY	HR	MO	DY	HR	H+	PH	COND	CD	CU	CA++	MG++	S.ACID	T.ACID	NH4+	FE	PB	MN	K+	NA+	ZN	CL-	SO4--	NO3-	AS	CATCH	EXCESS SO4	EXCESS CA	SEA SO4	+/-
1	0	1	15	99	1	18	99	10.00	5.00	7.2	-.0005	.002	.02	.038	-15.0	38.1	.081	.005	.003	-.001	-.2	.5	.001	.6	.5	.341	-.9000	-.9	.375	.001	.125	1.307
2	0	1	22	99	1	25	99	9.55	5.02	5.6	-.0005	.002	.03	.021	-15.0	33.3	.019	.002	.003	-.001	-.2	-.2	-.001	.3	.2	.168	-.9000	-.9	.175	.026	.025	1.352
3	0	1	25	11	1	26	12	17.78	4.75	12.5	-.0005	.002	.04	.053	21.1	43.8	.117	.002	.002	-.001	-.2	.4	.007	.8	.7	.558	-.9000	-.9	.600	.025	.100	1.096
4	5	1	29	9	2	1	9	25.70	4.59	15.6	-.0005	.004	.07	.060	29.2	54.1	.123	.006	.009	.001	-.2	.5	.007	.8	1.3	.864	-.9000	-.9	1.174	.051	.125	1.027
7	0	2	11	99	2	12	99	30.20	4.52	15.3	-.0005	.003	.09	.024	32.3	64.3	.123	.009	.004	.001	-.2	.3	.005	.4	1.2	1.085	-.9000	-.9	1.125	.079	.075	1.099
8	0	2	12	99	2	15	99	19.95	4.70	9.2	-.0005	.001	.01	.007	-15.0	54.2	.062	.003	.002	-.001	-.2	-.2	-.001	-.2	.6	.447	-.9000	-.9	.575	.006	.025	1.393
0	0	2	15	99	2	16	16	13.18	4.88	8.5	-.0005	.001	.04	.026	16.4	44.4	.071	.002	.002	.003	-.2	.2	.002	.4	.5	.390	-.9000	-.9	.450	.032	.050	1.162
9	0	2	16	16	2	17	9	19.95	4.70	14.4	-.9000	-.900	.09	.018	25.2	60.8	.077	-.900	-.900	-.900	-.2	.4	-.900	.6	1.0	.562	-.9000	-.9	.900	.075	.100	1.071
11	0	2	26	16	3	1	99	14.13	4.85	7.5	-.0005	.002	.04	.005	16.0	43.0	.049	.003	.002	-.001	-.2	-.2	.002	.2	.4	.496	-.9000	-.9	.375	.036	.025	1.191
12	0	3	11	99	3	12	99	20.42	4.69	14.9	-.0005	.005	.32	.047	24.5	61.6	.060	.023	.011	.004	-.2	.2	.008	.6	1.2	1.218	-.9000	-.9	1.150	.312	.050	.891
14	0	8	12	7	8	13	15	15.49	4.81	9.5	.0010	.003	.11	.008	18.7	40.8	.143	.044	.007	.004	-.2	-.2	.016	-.2	1.2	.518	-.9000	-.9	1.175	.106	.025	1.009
16	0	9	24	9	9	27	9	60.26	4.22	31.4	-.9000	-.900	-.90	-.900	68.1	109.0	.450	-.900	-.900	-.900	-.2	.2	-.900	.3	3.2	2.494	-.9000	-.9	3.150	-.900	.050	-.900
17	0	10	1	14	10	4	8	21.88	4.66	12.3	-.0005	.002	.10	.010	26.7	45.3	.248	.008	.007	.004	-.2	-.2	.015	.2	1.5	.859	-.9000	-.9	1.475	.096	.025	.953
18	0	10	5	15	10	6	11	22.39	4.65	9.9	-.0005	-.001	.05	.013	26.9	63.5	.138	.005	-.001	.003	-.2	-.2	.008	.2	1.1	.859	-.9000	-.9	1.075	.046	.025	.956
19	0	10	21	14	10	22	14	4.27	5.37	4.5	-.0005	.001	.04	.017	-15.0	34.2	.028	.009	.004	-.001	-.2	.2	.008	.2	-.2	.155	-.9000	-.9	.050	.032	.050	2.002
20	0	11	3	16	11	4	9	21.38	4.67	13.6	-.0005	.001	.08	.025	-15.0	63.5	.195	.013	.006	-.001	-.2	-.2	.007	.2	.6	1.054	-.9000	-.9	.575	.076	.025	1.285
0	0	11	4	9	11	5	9	13.49	4.87	13.6	-.9000	-.900	.05	.056	15.5	40.1	.077	-.900	-.900	-.900	-.2	.5	-.900	.7	.5	.443	-.9000	-.9	.375	.031	.125	1.318
AVERAGES								20.00 (4.70)	4.76	12.1	-.0003	-.002	.07	.027	-21.1	52.6	.121	.010	-.004	-.002	-.1	-.24	-.006	-.39	-.93	.736	-.9000	-.9	.869	.064	.061	1.195

REMARKS : (1) UNKNOWN START OR END TIMES ARE DESIGNATED BY 99. (2) HYDROGEN ION VALUES (H+) ARE COMPUTED FROM THE MEASURED PH. THE AVERAGE PH IS AN ARITHMETIC AVERAGE WHILE THE NUMBER IN PARENTHESES IS THE AVERAGE PH COMPUTED FROM THE H+ VALUES. (3) CONDUCTANCE IS EXPRESSED IN MICRO-SIEMENS/CM., STRONG ACID, TOTAL ACID & H+ ARE EXPRESSED IN MICRO EQUIVALENTS/LITRE. (4) CD, CU, FE, PB, MN & ZN ARE EXTRACTABLE AMOUNTS. (5) MINUS SIGNS FLAG VALUES THAT ARE BELOW DETECTION LIMITS. WHEN THE AVERAGES ARE COMPUTED, 1/2 THE DETECTION LIMIT IS USED AND THE AVERAGE VALUE IS AGAIN FLAGGED WITH A MINUS SIGN. (6) MISSING DATA ARE DESIGNATED BY -.9. (7) THE CATCH AMOUNTS ARE CALCULATED FROM THE SAMPLE VOLUME AND ARE EXPRESSED IN MILLIMETRES OF RAINFALL, WITH A FULL SAMPLER BEING APPROX. 34 MM. (8) THE ION BALANCE (+/-) IS COMPUTED FROM THE SUM OF H+, CA++, MG++, NH4+, K+ & NA+ DIVIDED BY THE SUM OF CL-, SO4-- & NO3-. VALUES BELOW THE DETECTION LIMITS ARE HANDLED AS ABOVE.

LOWER MAINLAND ACID RAIN STUDY
****
T-40 , B.C.
****
JAN 82-JAN 83
(VALUES ARE EXPRESSED IN MG PER LITRE)

EVENT	PERIOD MO	DY	HR	MO	DY	HR	H+	PH	COND	CD	CU	CA++	MG++	S.ACID	T.ACID	NH4+	FE	PB	MN	K+	NA+	ZN	CL-	SO4--	NO3-	AS	CATCH	EXCESS SO4	EXCESS CA	SEA SO4	+/-
1	0	1	15	99	1	18	99	14.13	4.85	10.2	-.0005	.005	.06	.047	17.7	41.3	.030	.005	.002	.002	-.2	.4	.005	.6	.8	.421	-.9000	-.9	.700	.045	.100	1.055
2	0	1	22	99	1	25	99	13.18	4.88	9.1	-.0005	.003	.03	.049	16.4	37.4	.041	.003	.005	-.001	-.2	.4	.003	.8	.4	.430	-.9000	-.9	.300	.015	.100	1.082
3	0	1	25	99	1	26	99	14.13	4.85	7.4	-.0005	.002	.01	.018	15.7	41.7	.040	.001	-.001	.003	-.2	-.2	.001	.2	.4	.275	-.9000	-.9	.375	.006	.025	1.371
4	0	1	29	11	1	29	19	13.18	4.88	8.6	-.0005	.002	.03	.019	18.0	44.6	.084	.002	.006	-.001	-.2	-.2	.002	.3	.6	.456	-.9000	-.9	.575	.026	.025	.982
5	0	1	29	19	2	1	9	16.22	4.79	8.7	-.0005	.001	.03	.018	19.0	46.2	.054	.002	.007	-.001	-.2	-.2	.001	.3	.5	.567	-.9000	-.9	.475	.026	.025	1.039
7	0	2	11	99	2	12	10	19.95	4.70	9.3	-.0005	.006	.02	.012	21.0	48.9	.059	.016	.003	.005	-.2	-.2	.014	.2	.7	.624	-.9000	-.9	.675	.016	.025	1.061
8	0	2	12	10	2	12	17	13.49	4.87	6.6	-.0005	.001	-.01	-.005	-15.0	42.1	.035	.003	.003	.001	-.2	-.2	-.001	-.2	.6	.230	-.9000	-.9	.575	.001	.025	1.198
8	0	2	12	17	2	15	9	15.85	4.80	7.6	-.0005	.003	.01	-.005	18.8	46.6	.042	.003	-.001	-.001	-.2	-.2	-.001	-.2	.6	.270	-.9000	-.9	.575	.006	.025	1.311
9	0	2	16	16	2	17	9	16.60	4.78	8.7	-.0005	.002	-.01	.009	19.8	45.5	.051	.002	.003	.003	-.2	-.2	.005	.2	.5	.474	-.9000	-.9	.475	.001	.025	1.153
10	0	2	23	15	2	25	99	14.45	4.84	8.0	-.0005	.002	.02	.007	17.7	43.8	.044	.004	.003	-.001	-.2	-.2	.001	-.2	.3	.496	-.9000	-.9	.275	.016	.025	1.487
11	0	2	26	16	3	1	9	11.22	4.95	6.8	-.0005	.001	.05	.014	15.1	38.5	.046	.001	.003	-.001	-.2	-.2	-.001	.2	.2	.474	-.9000	-.9	.175	.046	.025	1.394
0	0	8	5	15	8	12	9	38.02	4.42	-.9	.0031	.017	.43	.025	42.4	71.4	.177	.060	.025	.005	-.2	.2	.030	.3	2.5	1.107	-.9000	-.9	2.450	.422	.050	1.054
14	0	8	12	9	8	13	10	12.59	4.90	7.4	-.0005	.003	.04	-.005	16.5	38.0	.067	.004	.004	.001	-.2	-.2	.004	-.2	.8	.310	-.9000	-.9	.775	.036	.025	1.038
16	0	9	24	8	9	27	8	87.10	4.06	40.6	-.9000	-.900	.15	.026	95.5	148.0	.643	-.900	-.900	-.900	-.2	-.2	-.900	.3	3.5	3.933	-.9000	-.9	3.475	.146	.025	.962
17	0	10	1	14	10	4	14	20.42	4.69	9.3	.0006	.002	.06	.006	23.2	46.1	.114	.006	.004	.001	-.2	-.2	.005	-.2	.8	.492	-.9000	-.9	.775	.056	.025	1.355
18	0	10	5	14	10	6	10	13.49	4.87	6.6	-.0005	-.001	.01	.006	19.0	33.6	.077	.005	.002	.001	-.2	-.2	.002	-.2	.4	.602	-.9000	-.9	.375	.006	.025	1.230
19	0	10	21	8	10	22	8	3.31	5.48	4.6	-.9000	-.900	.03	.029	-15.0	21.5	.148	-.900	-.900	-.900	-.2	.2	-.900	.4	-.2	.186	-.9000	-.9	.050	.022	.050	1.629
20	0	11	3	15	11	5	10	17.78	4.75	12.7	.0014	.002	.08	.047	21.5	46.9	.091	.022	.009	-.001	-.2	.5	.011	.5	.5	.726	-.9000	-.9	.375	.061	.125	1.518
21	0	12	2	10	12	3	10	4.27	5.37	5.4	-.0005	.001	.06	.044	-15.0	33.6	.023	.005	.004	-.001	-.2	.3	.005	.6	.2	.111	-.9000	-.9	.125	.049	.075	1.213
23	0	12	20	16	12	21	10	12.59	4.90	7.7	-.9000	-.900	.13	.014	15.5	32.5	.032	-.900	-.900	-.900	-.2	.3	-.900	.4	-.2	.620	-.9000	-.9	.025	.119	.075	1.610
24	0	1	7	10	1	12	9	15.85	4.80	8.2	-.0005	-.001	.06	.038	-15.0	56.4	.042	.030	.009	-.001	-.2	.2	.003	.3	.4	.629	-.9000	-.9	.350	.052	.050	1.320
AVERAGES								18.47 (4.73)	4.83	9.7	-.0005	-.003	-.06	-.021	-21.1	47.8	.092	.010	-.005	-.001	-.1	-.18	-.005	-.30	-.71	.640	-.9000	-.9	.664	.056	.045	1.241

REMARKS : (1) UNKNOWN START OR END TIMES ARE DESIGNATED BY 99. (2) HYDROGEN ION VALUES (H+) ARE COMPUTED FROM THE MEASURED PH. THE AVERAGE PH IS AN ARITHMETIC AVERAGE WHILE THE NUMBER IN PARENTHESES IS THE AVERAGE PH COMPUTED FROM THE H+ VALUES. (3) CONDUCTANCE IS EXPRESSED IN MICRO-SIEMENS/CM., STRONG ACID, TOTAL ACID & H+ ARE EXPRESSED IN MICRO EQUIVALENTS/LITRE. (4) CD, CU, FE, PB, MN & ZN ARE EXTRACTABLE AMOUNTS. (5) MINUS SIGNS FLAG VALUES THAT ARE BELOW DETECTION LIMITS. WHEN THE AVERAGES ARE COMPUTED, 1/2 THE DETECTION LIMIT IS USED AND THE AVERAGE VALUE IS AGAIN FLAGGED WITH A MINUS SIGN. (6) MISSING DATA ARE DESIGNATED BY -.9. (7) THE CATCH AMOUNTS ARE CALCULATED FROM THE SAMPLE VOLUME AND ARE EXPRESSED IN MILLIMETRES OF RAINFALL, WITH A FULL SAMPLER BEING APPROX. 34 MM. (8) THE ION BALANCE (+/-) IS COMPUTED FROM THE SUM OF H+, CA++, MG++, NH4+, K+ & NA+ DIVIDED BY THE SUM OF CL-, SO4-- & NO3-. VALUES BELOW THE DETECTION LIMITS ARE HANDLED AS ABOVE.

LOWER MAINLAND ACID RAIN STUDY
****
VANCOUVER (A) , B.C.
****
JAN 82-JUN 82
(VALUES ARE EXPRESSED IN MG PER LITRE)

	PERIOD																											EXCESS		SEA	
EVENT	MO	DY	HR	MO	DY	HR	H+	PH	COND	CD	CU	CA++	MG++	S.ACID	T.ACID	NH4+	FE	PB	MN	K+	NA+	ZN	CL-	SO4--	NO3-	AS	CATCH	SO4	CA	SO4	+/-
1	0	1	14	15	1	16	11	3.89	5.41	4.4	-.0005	.002	.17	.009	-15.0	32.9	.045	.006	.002	-.001	-.2	-.2	.004	-.2	.4	.368	-.9000	-.9	.375	.166	.025	8.883
1	0	1	16	11	1	18	8	5.62	5.25	9.7	-.0005	.001	.06	.120	-15.0	33.2	.057	.003	.001	-.001	-.2	1.0	.001	1.6	.5	.173	-.9000	-.9	.249	.022	.251	7.838
2	0	1	18	8	1	24	9	7.94	5.10	8.9	-.0005	.005	.20	.060	-15.0	33.8	.059	.008	.005	.001	-.2	.5	.007	.9	.8	.297	-.9000	-.9	.674	.181	.125	1.568
3	0	1	25	9	1	26	9	8.32	5.08	12.7	-.0005	.005	.10	.100	-15.0	34.3	.094	.002	.004	.001	-.2	1.0	.002	1.8	.7	.279	-.9000	-.9	.449	.062	.251	1.042
0	0	1	26	9	1	28	9	19.50	4.71	32.3	-.9000	-.900	.62	.320	23.9	60.8	.225	-.900	-.900	-.900	-.2	2.6	-.900	4.7	2.6	1.005	-.9000	-.9	1.947	.521	.653	1.010
0	0	1	28	9	1	29	10	1.45	5.84	7.5	-.9000	-.900	.54	.039	-15.0	28.5	.143	-.900	-.900	-.900	-.2	.3	-.900	.4	.8	.762	-.9000	-.9	.725	.529	.075	1.371
4	0	1	29	10	1	31	8	10.47	4.98	14.8	-.9000	-.900	.44	.100	-15.0	40.3	.156	-.900	-.900	-.900	-.2	1.0	-.900	1.6	1.7	.753	-.9000	-.9	1.449	.402	.251	1.029
5	0	1	31	8	2	1	9	11.75	4.93	12.8	-.0005	.005	.15	.094	-15.0	40.4	.112	.005	.009	.002	-.2	.9	.004	1.6	1.0	.425	-.9000	-.9	.774	.116	.226	1.029
7	0	2	11	9	2	12	9	10.96	4.96	20.0	-.9000	-.900	.62	.190	15.6	48.2	.399	-.900	-.900	-.900	-.2	1.2	-.900	2.2	2.1	1.727	-.9000	-.9	1.799	.574	.301	1.006
8	0	2	12	9	2	13	9	17.38	4.76	12.7	-.0005	.002	.02	.068	20.0	46.7	.120	.008	.010	-.001	-.2	.6	.005	1.0	.8	.740	-.9000	-.9	.649	0.000	.151	1.044
8	0	2	13	9	2	14	9	16.60	4.78	7.4	-.0005	.003	-.01	-.005	18.7	44.9	.044	.008	.007	-.001	-.2	-.2	.004	-.2	.5	.363	-.9000	-.9	.475	.001	.025	1.383
8	0	2	14	9	2	15	8	10.96	4.96	7.6	-.0005	.003	.03	.015	15.2	39.8	.058	.005	.007	-.001	-.2	.2	.004	.4	.5	.363	-.9000	-.9	.450	.022	.050	1.023
0	0	2	15	8	2	16	8	16.98	4.77	12.6	-.9000	-.900	.09	.056	19.7	47.8	.113	-.900	-.900	-.900	-.2	.5	-.900	.9	.8	.757	-.9000	-.9	.674	.071	.125	1.044
9	0	2	16	8	2	17	10	3.09	5.51	10.3	-.9000	-.900	-.90	-.900	-15.0	32.6	.190	-.900	-.900	-.900	-.9	-.9	-.900	-.9	-.9	.598	-.9000	-.9	-.900	-.900	-.900	-.900
0	0	2	17	10	2	19	8	12.59	4.90	16.3	-.0005	.004	.19	.150	15.6	43.7	.072	.010	.008	.002	-.2	1.2	.005	2.3	1.1	.407	-.9000	-.9	.799	.144	.301	.987
0	0	2	19	8	2	21	9	16.60	4.78	19.9	-.9000	-.900	.38	.150	22.1	51.5	.184	-.900	-.900	-.900	-.2	1.2	-.900	2.3	1.7	.859	-.9000	-.9	1.399	.334	.301	.989
0	0	2	21	9	2	22	9	12.88	4.89	50.2	-.9000	-.900	1.50	3.300	18.6	51.5	.251	-.900	-.900	-.900	.2	5.2	-.900	9.6	3.6	1.935	-.9000	-.9	2.295	1.302	1.305	1.603
10	0	2	22	9	2	25	9	4.57	5.34	18.5	-.9000	-.900	1.30	.130	-15.0	37.6	.347	-.900	-.900	-.900	-.2	1.1	-.900	2.1	1.8	1.461	-.9000	-.9	1.524	1.258	.276	1.245
0	0	2	25	9	2	27	9	16.22	4.79	13.1	-.0005	.003	.30	.045	19.9	53.9	.167	.030	.017	.004	-.2	.3	.008	.6	1.1	1.041	-.9000	-.9	1.025	.289	.075	1.055
11	0	2	27	9	3	1	9	4.07	5.39	6.1	-.0005	.002	.22	.038	-15.0	32.1	.148	.012	.007	.002	-.2	.2	.004	.6	.5	.350	-.9000	-.9	.450	.212	.050	1.141
0	0	3	1	9	3	2	9	4.79	5.32	11.2	-.0005	.004	.28	.010	-15.0	35.0	.077	.040	.014	.004	-.2	.8	.008	1.5	.9	.651	-.9000	-.9	.699	.250	.201	.855
0	0	3	2	9	3	5	9	14.45	4.84	19.6	-.0005	.006	.83	.066	18.5	55.0	.424	.040	.029	.010	-.2	.5	.020	1.1	2.2	2.303	-.9000	-.9	2.074	.811	.125	.957
12	0	3	5	9	3	13	9	10.23	4.99	19.6	-.9000	-.900	.50	.210	-15.0	44.1	.103	-.900	-.900	.006	-.2	1.7	-.900	2.9	1.4	.842	-.9000	-.9	.973	.435	.427	1.081
0	0	3	13	9	4	1	9	.68	6.17	23.6	.0012	.015	1.50	.180	-15.0	33.6	.509	.040	.015	.003	.5	1.4	.012	2.5	3.2	1.856	-.9000	-.9	2.849	1.447	.351	1.151
0	0	4	1	9	4	3	23	5.89	5.23	18.8	-.0005	.006	.40	.230	-15.0	34.6	.210	.015	.013	.002	-.2	1.6	.002	3.1	1.4	.974	-.9000	-.9	.998	.339	.402	.972
0	0	4	3	23	4	12	8	1.70	5.77	11.2	-.0005	.007	.52	.100	-15.0	32.7	.134	.001	.005	.004	-.2	.8	.004	1.5	1.2	.660	-.9000	-.9	.999	.490	.201	1.035
0	0	4	12	8	4	14	9	3.63	5.44	23.4	-.0005	.006	.34	.340	-15.0	33.4	.062	.038	.010	.005	-.2	2.8	.004	5.2	1.0	.434	-.9000	-.9	.297	.234	.703	1.011
0	0	4	14	9	4	21	17	2.40	5.62	17.6	-.0005	.006	.85	.150	-15.0	33.3	.190	.025	.002	-.001	.2	1.4	.002	1.9	1.9	1.218	-.9000	-.9	1.549	.797	.351	1.185
0	0	4	21	17	5	17	8	.20	6.69	24.4	.0006	.009	2.30	.140	-15.0	-15.0	.302	.031	.024	.250	.2	1.1	.015	1.9	3.2	2.015	-.9000	-.9	2.924	2.258	.276	1.285
0	0	5	18	7	6	27	8	.78	6.11	8.8	-.0005	.004	.72	.049	-15.0	41.7	.031	.006	.009	.003	-.2	.4	.009	.2	1.6	.283	-.9000	-.9	1.500	.705	.100	1.434

LOWER MAINLAND ACID RAIN STUDY
****
VANCOUVER (A) , B.C.
****
JUN 82-DEC 82

(VALUES ARE EXPRESSED IN MG PER LITRE)

EVENT	PERIOD MO	DY	HR	MO	DY	HR	H+	PH	COND	CD	CU	CA++	MG++	S.ACID	T.ACID	NH4+	FE	PB	MN	K+	NA+	ZN	CL-	SO4--	NO3-	AS	CATCH	EXCESS SO4	EXCESS CA	SEA SO4	+/-
0	0	6	27	8	7	4	8	6.03	5.22	6.8	-.0005	.002	.02	.019	-15.0	39.0	.075	.070	.009	.004	-.2	-.2	.003	.3	.7	.527	-.9000	-.9	.675	.016	.025	.623
0	0	7	4	8	7	14	8	.69	6.16	7.5	-.0005	.030	.36	.020	-15.0	36.4	.215	.020	.007	.002	-.2	.3	.003	.2	1.0	.655	-.9000	-.9	.925	.349	.075	1.292
0	0	7	14	8	7	15	8	6.03	5.22	6.1	-.0005	.004	.02	.019	16.6	36.5	.046	.030	.006	.090	-.2	.2	.002	.3	.6	.328	-.9000	-.9	.550	.012	.050	.853
14	0	8	11	8	8	14	8	7.94	5.10	8.6	-.0005	.005	.14	.014	-15.0	19.6	.087	.009	.007	-.001	-.2	.2	.008	.3	.9	.558	-.9000	-.9	.850	.132	.050	.888
0	0	8	14	9	8	31	9	16.60	4.78	12.5	-.9000	-.900	.21	.047	19.2	47.5	.213	-.900	-.900	-.900	-.2	.4	-.900	.4	1.4	1.054	-.9000	-.9	1.300	.195	.100	1.092
15	0	8	31	9	9	7	9	14.79	4.83	11.3	.0023	.006	.15	.028	20.0	48.0	.157	.007	.010	.001	-.2	.3	.016	.5	1.1	1.063	-.9000	-.9	1.025	.139	.075	.903
0	0	9	7	9	9	11	13	10.00	5.00	5.6	-.9000	-.900	.09	.016	-15.0	35.6	.081	-.900	-.900	-.900	-.2	-.2	-.900	.2	.8	.474	-.9000	-.9	.775	.086	.025	.909
16	0	9	11	8	9	29	8	22.91	4.64	20.5	-.9000	-.900	.69	.051	28.1	72.9	.756	-.900	-.900	-.900	-.2	.4	-.900	.5	3.2	1.577	-.9000	-.9	3.100	.675	.100	1.162
17	0	9	29	8	10	4	9	12.88	4.89	10.3	.0007	.005	.30	.033	17.4	38.3	.141	.009	.009	.004	-.2	.3	.011	.5	1.3	.762	-.9000	-.9	1.225	.289	.075	1.010
18	0	10	4	9	10	6	8	19.50	4.71	20.7	-.0005	.002	.18	.170	25.3	63.5	.203	.005	.002	.005	-.2	1.4	.007	2.7	1.6	.793	-.9000	-.9	1.249	.127	.351	.958
0	0	10	6	8	10	17	8	10.23	4.99	16.6	.0006	.005	.19	.220	-15.0	41.0	.093	.008	.008	.002	-.2	1.6	.030	2.8	1.3	.438	-.9000	-.9	.898	.129	.402	1.018
19	0	10	17	8	10	23	9	5.62	5.25	10.3	-.0005	.003	.17	.077	-15.0	42.3	.261	.005	.010	.001	-.2	.6	.010	.9	.4	.456	-.9000	-.9	.249	.147	.151	1.548
0	0	10	23	9	10	25	8	17.78	4.75	20.2	-.0005	.005	.13	.150	21.4	50.6	.145	.019	.012	.001	-.2	1.2	.005	2.1	1.2	.438	-.9000	-.9	.899	.084	.301	1.089
0	0	10	25	8	10	26	7	15.49	4.81	27.3	-.0005	.004	.19	.270	19.0	52.5	.060	.020	.012	.001	-.2	2.5	.005	4.3	1.3	.328	-.9000	-.9	.673	.095	.627	1.053
0	0	10	26	7	10	28	8	6.92	5.16	12.0	-.9000	-.900	.20	.060	15.0	34.0	.247	-.900	-.900	-.900	-.2	.8	-.900	1.3	.6	.602	-.9000	-.9	.399	.170	.201	1.238
20	0	11	1	14	11	4	8	32.36	4.49	29.8	.0016	.007	.26	.190	38.6	75.0	.244	.017	.012	-.001	-.2	1.6	.022	3.0	2.0	1.439	-.9000	12.7	1.598	.199	.402	.981
0	0	11	4	8	11	5	9	15.49	4.81	16.6	-.0005	.002	.17	.110	18.8	46.7	.112	.008	.016	-.001	-.2	1.0	.006	1.7	.9	.629	-.9000	13.1	.649	.132	.251	1.110
0	0	11	5	9	11	6	8	10.96	4.96	8.0	-.9000	-.900	.07	.050	-15.0	34.0	.050	-.900	-.900	-.900	-.2	.5	-.900	.8	.4	.332	-.9000	5.8	.275	.051	.125	1.259
0	0	11	6	8	11	7	8	3.98	5.40	13.3	-.9000	-.900	.38	.130	-15.0	31.7	.181	-.900	-.900	-.900	-.2	1.2	-.900	2.1	.7	.842	-.9000	4.3	.399	.334	.301	1.126
0	0	11	7	8	11	16	8	28.84	4.54	16.6	-.0005	.005	.37	.063	34.8	76.9	.143	.023	.018	.002	-.2	.4	.007	.6	1.7	1.634	-.9000	13.1	1.600	.355	.100	1.022
0	0	11	16	8	11	16	13	14.79	4.83	18.0	-.0005	.004	.09	.180	20.3	42.3	.132	.010	.006	.001	-.2	1.5	.003	2.7	.8	.452	-.9000	13.1	.423	.033	.377	1.091
0	0	11	16	13	11	21	9	20.89	4.68	17.3	-.0005	.005	.33	.120	26.0	66.7	.202	.028	.031	.003	-.2	.8	.007	1.4	1.3	1.506	-.9000	10.9	1.099	.300	.201	1.054
0	0	11	21	9	11	27	8	5.50	5.26	8.2	-.0005	.005	.37	.017	-15.0	53.3	.257	.017	.018	.003	-.2	.2	.010	.3	1.2	.651	-.9000	13.1	1.150	.362	.050	1.157
0	0	11	27	8	11	28	2	10.23	4.99	6.7	-.0005	.002	.08	.023	-15.0	34.0	.130	.013	.009	.001	-.2	-.2	.002	.3	.3	.571	-.9000	13.2	.275	.076	.025	1.264
0	0	11	28	2	11	28	14	10.72	4.97	10.2	-.0005	.002	.07	.097	-15.0	42.3	.112	.006	.005	-.001	-.2	.8	.001	1.4	.4	.292	-.9000	11.4	.199	.040	.201	1.252
0	0	11	28	14	11	29	5	12.88	4.89	10.2	-.0005	.003	.11	.077	17.5	47.4	.161	.017	.004	-.001	-.2	.6	.001	1.1	.4	.620	-.9000	8.6	.249	.087	.151	1.262
0	0	11	29	5	12	1	8	12.88	4.89	8.9	-.0005	.004	.21	.024	17.0	53.8	.116	.013	.007	.002	-.2	.2	.004	.3	.3	1.041	-.9000	11.4	.250	.202	.050	1.366
0	0	12	1	8	12	2	8	12.88	4.89	8.5	-.0005	.003	.06	.040	17.4	55.2	.104	.017	.006	.001	-.2	.4	.005	.5	.3	.633	-.9000	13.1	.200	.045	.100	1.469
0	0	12	3	5	12	4	8	1.55	5.81	7.3	-.9000	-.900	.03	.091	-15.0	50.4	.030	-.900	-.900	-.900	-.2	.8	-.900	1.4	.2	.062	-.9000	5.3	0.000	0.000	.201	1.110
0	0	12	4	8	12	12	8	17.38	4.76	10.7	-.0005	.002	.04	.033	25.6	104.0	.162	.008	.004	-.001	-.2	.2	.002	.4	.7	.673	-.9000	13.0	.650	.032	.050	1.153

LOWER MAINLAND ACID RAIN STUDY
****
VANCOUVER (A) , B.C.
****
DEC 82-FEB 83
(VALUES ARE EXPRESSED IN MG PER LITRE)

	PERIOD																												EXCESS		SEA	
EVENT	MO	DY	HR	MO	DY	HR	H+	PH	COND	CD	CU	CA++	MG++	S.ACID	T.ACID	NH4+	FE	PB	MN	K+	NA+	ZN	CL-	SO4--	NO3-	AS	CATCH	SO4	CA	SO4	+/-
0	0	12	12	8	12	15	4	6.46	5.19	14.8	-.0005	.003	.19	.140	-15.0	48.1	.253	.015	.005	.001	-.2	1.3	.006	2.2	.8	.664	-.9000	11.1	.474	.141	.326	1.125
22	0	12	15	4	12	16	5	.27	6.57	11.1	-.0005	.002	.12	.120	-15.0	53.0	.096	.009	.004	-.001	-.2	1.1	.004	2.0	.3	.283	-.9000	12.6	.024	.078	.276	1.069
0	0	12	16	5	12	18	3	11.75	4.93	34.3	-.9000	-.900	.31	.450	-15.0	42.7	.174	-.900	-.900	-.900	-.2	3.9	-.900	6.9	1.7	.850	-.9000	5.3	.721	.162	.979	1.010
0	0	12	18	3	12	20	8	3.47	5.46	39.5	-.9000	-.900	.34	.560	-15.0	25.9	.149	-.900	-.900	-.900	-.2	5.3	-.900	9.5	1.9	.341	-.9000	6.8	.570	.139	1.330	.984
23	0	12	20	8	12	21	7	10.96	4.96	14.4	-.9000	-.900	.23	.120	-15.0	42.7	.179	-.900	-.900	-.900	-.2	1.0	-.900	1.7	1.0	.784	-.9000	5.9	.749	.192	.251	1.084
0	0	12	21	7	12	22	3	7.41	5.13	16.4	-.0005	.003	.05	.180	-15.0	30.0	.179	.005	.005	-.001	-.2	1.7	.002	2.9	.5	.593	-.9000	9.7	.073	0.000	.427	1.092
0	0	12	22	3	12	26	9	15.85	4.80	16.6	.0028	.010	.14	.094	20.3	53.4	.203	.013	.011	.002	.2	1.0	.012	1.8	1.2	1.129	-.9000	7.3	.949	.102	.251	.962
0	0	12	26	9	1	2	23	18.20	4.74	14.2	-.0005	.008	.06	.068	-15.0	52.5	.354	.023	.013	.002	-.2	.6	.005	1.1	1.2	.806	-.9000	13.0	1.049	.037	.151	1.088
0	0	1	2	23	1	4	9	1.86	5.73	10.6	.0017	.015	.15	.046	-15.0	35.9	.251	.023	.017	.002	.5	.8	.014	1.3	.6	.855	-.9000	9.6	.399	.120	.201	1.186
0	0	1	4	9	1	5	8	7.76	5.11	3.7	-.0005	.003	.04	.006	-15.0	34.2	.040	.015	.005	.002	-.2	-.2	.005	-.2	.2	.221	-.9000	7.7	.175	.036	.025	1.837
0	0	1	5	8	1	7	13	11.22	4.95	7.4	-.0005	.003	.08	.040	-15.0	34.3	.116	.013	.007	.001	-.2	.2	.004	.5	.5	.403	-.9000	8.4	.450	.072	.050	1.167
24	0	1	7	13	1	8	1	6.31	5.20	5.2	-.0005	.003	.03	.037	-15.0	25.9	.021	.003	.005	-.001	-.2	.2	.002	.5	-.2	.244	-.9000	8.8	.050	.022	.050	1.157
24	0	1	8	1	1	10	0	5.25	5.28	6.5	-.0005	.003	.05	.051	-15.0	25.9	.050	.005	.003	-.001	-.2	.3	.002	.8	.2	.204	-.9000	8.5	.125	.039	.075	1.010
0	0	1	10	0	1	10	6	7.24	5.14	3.2	-.0005	.002	.02	.006	-15.0	25.9	.031	.002	.003	-.001	-.2	-.2	.001	-.2	.2	.111	-.9000	7.0	.175	.016	.025	1.979
0	0	1	18	12	1	19	9	15.49	4.81	8.8	-.0005	.003	.09	.019	21.3	55.1	.112	.029	.009	.002	-.2	-.2	.004	.2	.6	.589	-.9000	8.4	.575	.086	.025	1.254
0	0	1	19	9	1	23	9	14.13	4.85	13.6	-.9000	-.900	.22	.044	-15.0	51.7	.354	-.900	-.900	-.900	-.2	.2	-.900	.6	1.1	1.413	-.9000	5.7	1.050	.212	.050	.952
0	0	1	23	9	1	24	9	7.24	5.14	8.1	-.0005	.002	.10	.037	-15.0	36.8	.216	.017	.002	.010	-.2	-.2	.002	.5	.5	.567	-.9000	7.0	.475	.096	.025	1.015
0	0	1	24	9	1	26	8	6.92	5.16	9.0	-.0005	.004	.08	.064	-15.0	34.2	.207	.009	.007	-.001	-.2	.4	.002	1.0	.5	.456	-.9000	6.9	.400	.065	.100	1.036
0	0	1	26	8	1	27	8	3.55	5.45	5.1	-.0005	.003	.13	.021	-15.0	31.6	.111	.010	.007	.002	-.2	.2	.005	.3	.3	.261	-.9000	7.0	.250	.122	.050	1.542
0	0	1	27	8	2	1	9	12.02	4.92	18.0	-.9000	-.900	-.90	-.900	17.3	71.5	.633	-.900	-.900	-.900	.4	.7	-.900	1.2	1.8	2.733	-.9000	6.2	1.624	-.900	.176	-.900
0	0	2	1	9	2	9	6	7.24	5.14	11.8	-.0005	.002	.22	.069	-15.0	50.1	1.046	.014	.006	.001	-.2	.6	.004	1.0	1.1	.943	.0006	12.8	.949	.197	.151	1.667
0	0	2	9	6	2	10	9	13.49	4.87	15.4	-.0005	.001	.10	.120	15.2	28.8	.085	.008	.004	.007	-.2	1.0	.002	1.7	1.0	.461	.0012	12.4	.749	.062	.251	1.038
25	0	2	10	9	2	10	23	7.41	5.13	7.1	-.0005	.001	.08	.050	-15.0	59.5	.094	.010	.006	-.001	-.2	.4	.003	.7	.4	.323	.0006	12.3	.300	.065	.100	1.222
25	0	2	10	23	2	11	3	6.61	5.18	5.3	-.0005	-.001	.01	.008	-15.0	26.6	.048	.043	-.001	-.001	-.2	-.2	-.001	.2	.3	.248	.0001	12.7	.275	.006	.025	1.091
25	0	2	11	3	2	11	9	28.18	4.55	23.9	-.9000	-.900	.06	.140	38.3	66.9	.035	-.900	-.900	-.900	-.2	1.1	-.900	2.0	2.1	.354	.0004	6.0	1.824	.018	.276	.898
26	0	2	11	9	2	12	4	21.38	4.67	16.4	-.0005	.003	.05	.100	29.4	62.5	.069	.012	.002	-.001	-.2	1.0	.001	1.5	1.5	.686	.0006	12.1	1.249	.012	.251	.969
26	0	2	12	4	2	12	16	10.23	4.99	7.8	-.0005	-.001	.01	.032	15.0	39.1	.051	.004	-.001	-.001	-.2	.3	-.001	.4	.3	.407	.0004	12.9	.225	0.000	.075	1.320
0	0	2	12	16	2	14	8	12.30	4.91	10.3	-.0005	.003	.03	.059	18.4	47.5	.033	.005	.002	.001	-.2	.5	.001	.9	.5	.292	.0003	6.8	.375	.011	.125	1.106
0	0	2	14	8	2	15	23	9.55	5.02	13.3	.0008	.006	.19	.100	-15.0	46.2	.197	.014	.006	.002	.2	.9	.012	1.6	1.0	.483	.0004	13.1	.774	.156	.226	1.118
27	0	2	15	23	2	17	6	13.49	4.87	9.1	-.0005	.001	.13	.039	-15.0	48.0	.136	.009	.004	-.001	-.2	.3	.004	.7	.5	.540	.0003	13.0	.425	.119	.075	1.192

LOWER MAINLAND ACID RAIN STUDY
****
VANCOUVER (A) , B.C.
****
FEB 83-JUL 83
(VALUES ARE EXPRESSED IN MG PER LITRE)

	PERIOD																												EXCESS		SEA	
EVENT	MO	DY	HR	MO	DY	HR	H+	PH	COND	CD	CU	CA++	MG++	S.ACID	T.ACID	NH4+	FE	PB	MN	K+	NA+	ZN	CL-	SO4--	NO3-	AS	CATCH	SO4	CA	SO4	+/-
0	0	2	17	6	2	18	17	6.03	5.22	5.6	-.0005	.001	.05	.046	-15.0	63.3	.046	.007	.002	-.001	-.2	.4	.002	.7	.2	.124	.0001	13.0	.100	.035	.100	1.344
0	0	2	18	17	2	19	16	2.29	5.64	15.1	-.0005	.004	.54	.160	17.5	50.9	.206	.008	.004	.001	-.2	1.3	.004	2.1	1.2	.509	.0009	12.4	.874	.491	.326	1.222
0	0	2	19	16	2	19	19	7.59	5.12	17.4	-.0005	-.001	.31	.220	15.3	55.6	.078	.008	.005	.002	-.2	1.8	.001	3.1	1.1	.531	.0009	11.7	.648	.242	.452	1.062
0	0	2	19	19	2	20	6	9.55	5.02	19.5	-.0005	-.001	.24	.260	-15.0	52.1	.041	.008	.003	.001	-.2	2.1	-.001	3.6	1.0	.580	.0003	12.6	.473	.160	.527	1.056
0	0	2	20	6	2	22	3	4.17	5.38	4.2	-.0005	.001	.11	.018	-15.0	38.2	.069	.005	-.001	.001	-.2	-.2	.005	.2	.2	.261	.0001	9.8	.175	.106	.025	1.561
28	0	2	22	3	2	23	9	9.33	5.03	7.4	-.0005	.001	.14	.020	18.6	67.8	.154	.009	.004	.002	-.2	-.2	.003	.2	.7	.416	.0010	9.9	.675	.136	.025	1.241
0	0	2	23	9	2	26	8	10.23	4.99	15.0	-.0005	.006	.51	.055	-15.0	105.0	.707	.019	.013	.004	.3	.5	.013	.7	1.9	1.772	.0004	8.6	1.775	.491	.125	1.238
0	0	2	26	8	3	6	10	17.38	4.76	19.5	-.0005	.008	.50	.076	24.5	86.7	1.029	.042	.012	.006	.3	.5	.010	.9	1.7	1.718	.0006	8.0	1.575	.481	.125	1.526
0	0	3	6	10	3	8	9	9.77	5.01	12.2	.0006	.009	.30	.060	-15.0	79.2	.900	.060	.009	.004	-.2	.5	.008	.7	1.3	.997	.0011	10.4	1.174	.281	.125	1.652
0	0	3	8	9	3	9	3	7.94	5.10	12.6	-.0005	.001	.08	.066	-15.0	41.7	.111	.030	.005	.001	-.2	.5	.015	.9	.5	.230	.0003	13.0	.375	.061	.125	1.211
0	0	3	9	3	3	10	6	7.24	5.14	11.9	-.0005	.003	.12	.059	-15.0	40.1	.076	.005	.002	-.001	-.2	.3	.001	.7	.4	.235	.0002	9.7	.325	.109	.075	1.190
31	0	3	10	6	3	13	15	3.98	5.40	11.5	-.0005	.003	.30	.097	-15.0	51.1	.123	.007	.005	.001	-.2	.7	.003	1.2	.7	.412	-.0001	10.5	.524	.273	.176	1.212
0	0	3	13	15	3	22	8	17.38	4.76	26.7	-.0005	.005	.29	.250	24.5	78.4	1.286	.010	.009	.002	-.2	2.1	.005	3.9	1.7	.266	.0007	9.8	1.173	.210	.527	1.454
0	0	3	22	8	3	29	8	8.71	5.06	17.5	-.0005	.004	.32	.150	17.8	96.7	1.286	.008	.007	.003	-.2	1.2	.009	1.3	1.6	1.993	.0006	13.0	1.299	.274	.301	1.597
33	0	3	29	8	3	29	15	6.46	5.19	6.3	-.0005	.003	.10	.041	-15.0	59.1	.122	.009	.004	.001	-.2	.2	.002	.5	.4	.314	.0001	12.9	.350	.092	.050	1.194
33	0	3	29	15	3	31	2	12.88	4.89	10.9	-.0005	.003	.13	.085	19.2	64.2	.109	.008	.007	.001	-.2	.6	.003	1.1	.6	.788	.0003	12.2	.449	.107	.151	1.086
0	0	3	31	2	4	1	12	10.23	4.99	7.7	-.0005	.004	.19	.029	17.6	62.0	.044	.004	.006	.001	-.2	-.2	.003	.3	1.0	.306	.0004	12.7	.975	.186	.025	.919
0	0	4	1	12	4	7	9	10.47	4.98	14.3	-.0005	.002	.26	.100	17.4	55.2	.081	.009	.006	.002	-.2	1.0	.003	1.8	1.1	.660	.0004	8.0	.849	.222	.251	.975
0	0	4	7	9	4	11	12	16.98	4.77	16.9	-.0005	.004	.20	.130	23.3	77.9	.176	.027	.011	.001	-.2	1.0	.003	1.7	1.3	1.183	.0004	12.9	1.049	.162	.251	.993
0	0	4	11	12	4	24	5	4.79	5.32	15.1	-.0005	.013	.78	.085	18.6	90.2	.932	.100	.013	.008	-.2	.5	.013	1.0	2.3	1.404	.0002	13.0	2.174	.761	.125	1.283
0	0	4	24	5	4	24	10	10.96	4.96	8.3	-.0005	.002	.04	.052	-15.0	34.4	.017	.006	.001	-.001	-.2	.5	-.001	.4	.4	.190	-.0001	12.5	.275	.021	.125	1.874
0	0	4	24	10	4	26	5	8.71	5.06	7.3	-.0005	.003	.06	.029	16.3	47.3	.017	.011	.003	.002	-.2	.5	-.001	.9	.4	.341	-.0001	13.2	.275	.041	.125	1.003
0	0	4	26	5	5	8	8	13.80	4.86	12.9	-.0005	.004	.36	.064	18.0	65.4	.131	.022	.009	.002	-.2	.4	.003	.7	1.6	.833	.0006	12.5	1.500	.345	.100	.966
0	0	5	8	8	5	16	8	28.84	4.54	23.5	-.0005	.007	.82	.100	32.8	72.5	.306	.027	.033	-.900	-.2	.5	.007	1.0	3.6	1.993	.0010	7.7	3.474	.801	.125	.881
0	0	5	16	8	6	9	8	38.02	4.42	39.3	.0005	.013	1.30	.190	42.2	106.0	.697	.034	.035	.014	.2	1.4	.030	1.9	5.6	3.100	.0001	6.8	5.249	1.247	.351	1.014
34	35	6	9	8	6	15	13	22.91	4.64	17.0	-.0005	.001	.41	.070	28.0	66.3	.547	.009	.011	.009	-.2	.3	.007	.6	2.4	1.284	.0006	7.7	2.325	.399	.075	1.085
36	0	6	15	13	6	17	9	20.42	4.69	9.1	-.0005	.003	.14	.015	24.7	58.7	.058	.008	.006	.003	-.2	-.2	.002	-.2	.8	.633	.0001	13.1	.775	.136	.025	1.306
0	0	6	17	9	6	20	8	38.02	4.42	18.4	-.0005	.003	.10	.029	40.5	70.9	.089	.007	.013	.002	-.2	.2	.003	.5	1.7	.828	.0003	8.0	1.650	.092	.050	.980
0	0	6	20	8	6	23	8	40.74	4.39	18.8	-.0005	.003	.07	.015	-.9	-.9	.093	.015	.008	.001	-.2	-.2	.002	-.2	1.7	.952	.0006	6.7	1.675	.066	.025	1.074
0	0	6	23	8	7	4	8	11.48	4.94	12.0	-.0005	.007	.61	.046	15.1	53.7	.231	.028	.014	.004	.2	.3	.010	.4	1.5	1.218	.0003	7.0	1.425	.599	.075	1.234

LOWER MAINLAND ACID RAIN STUDY
****
VANCOUVER (A) , B.C.
****
JUL 83-NOV 83
(VALUES ARE EXPRESSED IN MG PER LITRE)

EVENT	PERIOD MO	DY	HR	MO	DY	HR	H+	PH	COND	CD	CU	CA++	MG++	S.ACID	T.ACID	NH4+	FE	PB	MN	K+	NA+	ZN	CL-	SO4--	NO3-	AS	CATCH	EXCESS SO4	EXCESS CA	SEA SO4	+/-
0	0	7	4	8	7	11	7	26.30	4.58	12.9	-.0005	.003	.19	.016	34.2	81.7	.060	.007	.012	.001	-.2	-.2	.003	-.2	1.5	.629	.0002	13.0	1.475	.186	.025	1.071
0	0	7	11	7	7	11	22	6.03	5.22	4.1	-.0005	.001	.02	.007	-15.0	41.4	.012	.003	.001	-.001	-.2	-.2	.001	-.2	-.2	.173	-.0001	13.2	.075	.016	.025	1.972
0	0	7	11	22	7	13	1	8.91	5.05	3.3	-.0005	-.001	.09	.007	-15.0	32.5	.003	.002	.001	.001	-.2	-.2	.001	-.2	-.2	.301	-.0001	13.2	.075	.086	.025	2.158
0	0	7	13	1	7	15	8	10.23	4.99	7.0	-.0005	.001	.07	.018	15.4	43.3	.031	.004	.005	-.900	-.2	-.2	.002	.2	.3	.292	.0001	7.9	.275	.066	.025	1.436
0	0	7	15	8	8	11	16	48.98	4.31	47.1	-.9000	-.900	1.30	.150	62.7	147.0	1.993	-.900	-.900	-.900	.2	.5	-.900	.9	7.4	2.436	.0005	4.6	7.274	1.281	.125	1.205
0	0	8	11	16	8	28	21	22.39	4.65	15.6	-.0005	.005	.19	.053	29.7	71.9	.051	.031	.007	.001	-.2	.4	.004	.7	1.5	.337	.0003	12.2	1.400	.175	.100	1.046
0	0	8	28	21	9	1	9	22.39	4.65	11.1	-.0005	.002	.14	.019	28.9	71.4	.120	.033	.006	.002	-.2	-.2	.004	.3	.7	.912	.0002	12.9	.675	.136	.025	1.179
0	0	9	1	9	9	2	8	5.01	5.30	4.7	.0007	-.001	.04	.023	17.0	43.5	.037	.012	.002	-.001	-.2	.3	.002	.3	.2	.155	-.0001	13.2	.125	.029	.075	1.756
0	0	9	2	8	9	10	6	12.59	4.90	10.5	-.0005	.001	.19	.028	19.4	50.9	.082	.015	.006	.001	-.2	.2	.003	.3	.4	.828	.0002	12.7	.350	.182	.050	1.333
0	0	9	10	6	9	21	8	20.89	4.68	17.5	-.0005	.001	.30	.100	24.7	52.7	.156	.026	.010	.004	-.2	.8	.003	1.5	1.4	.709	.0003	8.2	1.199	.270	.201	1.087
0	0	9	21	8	9	27	8	19.95	4.70	12.4	-.0005	.006	.15	.045	23.2	67.7	.135	.022	.009	.002	-.2	.2	.003	.4	1.2	.372	.0006	8.3	1.150	.142	.050	1.180
0	0	9	27	8	10	17	5	7.41	5.13	45.2	.0026	.040	3.30	.330	16.0	81.0	.240	.070	.050	.020	.4	2.5	.010	3.8	6.9	3.246	.0003	12.8	6.273	3.205	.627	1.093
38	0	10	17	5	10	20	7	3.31	5.48	12.1	.0005	.021	.82	.150	18.4	54.3	.112	.070	.040	.005	-.2	.4	.020	.8	2.3	.766	.0003	8.7	2.200	.805	.100	.999
0	0	10	20	7	10	21	19	16.98	4.77	14.4	-.0005	.003	.42	.060	19.6	53.0	.201	.070	.019	.003	-.2	.2	.003	.5	2.1	.842	.0004	13.1	2.050	.412	.050	.914
0	0	10	21	19	10	25	8	20.42	4.69	16.4	-.0005	.004	.26	.080	25.9	60.9	.075	.032	.013	.003	-.2	.5	.003	1.1	1.5	.576	.0001	11.8	1.375	.241	.125	.957
0	0	10	25	8	10	30	12	10.00	5.00	13.0	-.0005	.005	.73	.044	15.3	14.4	.126	.080	.020	.004	-.2	.2	.014	.4	1.5	1.462	.0003	13.2	1.450	.722	.050	1.033
0	0	10	30	12	10	31	8	14.45	4.84	6.8	-.0005	.003	.04	.006	18.7	41.2	.024	.013	.005	-.001	-.2	-.2	-.001	-.2	.2	.443	.0002	7.9	.175	.036	.025	1.782
40	0	10	31	8	11	2	3	10.47	4.98	7.7	-.0005	.003	.14	.039	15.4	43.7	.149	.100	.008	.005	-.2	.2	.003	.7	.3	.531	.0002	13.1	.250	.132	.050	1.163
41	0	11	2	3	11	2	21	10.23	4.99	9.0	-.0005	.001	.12	.067	-15.0	41.3	.108	.009	.004	-.001	-.2	.5	.003	1.0	.3	.527	.0005	13.0	.175	.101	.125	1.211
41	0	11	2	21	11	3	7	4.68	5.33	4.7	-.0005	.001	.09	.029	-15.0	22.7	.024	.110	.002	.005	-.2	.2	.002	.5	-.2	.217	.0001	9.6	.050	.082	.050	1.226
0	0	11	3	7	11	6	7	4.07	5.39	11.3	-.0005	.001	.53	.076	-15.0	26.9	.211	.028	.011	.002	-.2	.5	.010	1.2	.9	.713	.0009	10.9	.775	.511	.125	1.136
0	0	11	6	7	11	7	16	5.89	5.23	20.3	-.0005	.002	.23	.260	-15.0	23.1	.076	.021	.009	.001	-.2	2.2	.002	4.2	.6	.319	.0001	7.7	.048	.146	.552	1.038
0	0	11	7	16	11	10	9	6.92	5.16	7.6	-.0005	-.001	.13	.035	19.4	50.4	.159	.033	.007	.002	-.2	.2	.004	.6	.4	.399	.0001	11.0	.350	.122	.050	1.147
0	0	11	10	9	11	13	8	10.96	4.96	12.0	-.0005	-.001	.21	.120	-15.0	49.1	.122	.016	.009	.001	-.2	.9	.004	2.0	.6	.452	.0003	13.2	.374	.176	.226	1.047
0	0	11	13	8	11	14	6	11.75	4.93	12.5	-.0005	-.001	.12	.097	15.8	57.2	.085	.026	.007	.001	-.2	.7	.002	1.5	.5	.518	.0003	13.2	.324	.093	.176	1.039
0	0	11	14	6	11	14	20	10.72	4.97	9.6	-.0005	.001	.09	.046	-15.0	60.0	.086	.016	.007	.001	-.2	.3	.005	.8	.4	.456	.0004	13.2	.325	.079	.075	1.029
0	0	11	14	20	11	15	1	7.59	5.12	3.8	-.0005	.001	.02	.018	-15.0	34.2	.035	.034	.004	.001	-.2	-.2	.002	.3	.2	.270	.0001	13.2	.175	.016	.025	1.114
43	0	11	15	1	11	15	9	11.48	4.94	16.8	-.0005	.003	.09	.180	-15.0	50.1	.037	.007	.004	-.001	-.2	1.5	-.001	3.0	.3	.323	.0003	13.2	0.000	.033	.377	1.047
43	0	11	15	9	11	16	6	15.14	4.82	16.4	-.0005	-.001	.09	.150	16.8	58.4	.053	.060	.005	.002	-.2	1.2	.001	2.4	.4	.580	.0006	13.2	.099	.044	.301	1.050
0	0	11	16	6	11	16	23	10.00	5.00	6.8	-.0005	.003	.04	.033	15.1	52.1	.053	.027	.004	.001	-.2	.2	.002	.5	.2	.345	.0003	10.3	.150	.032	.050	1.213

LOWER MAINLAND ACID RAIN STUDY
****
VANCOUVER (A) , B.C.
****
NOV 83-DEC 83

(VALUES ARE EXPRESSED IN MG PER LITRE)

EVENT	PERIOD MO	DY	HR	MO	DY	HR	H+	PH	COND	CD	CU	CA++	MG++	S.ACID	T.ACID	NH4+	FE	PB	MN	K+	NA+	ZN	CL-	SO4--	NO3-	AS	CATCH	EXCESS SO4	CA	SEA SO4	+/-
0	0	11	16	23	11	17	5	9.12	5.04	6.5	-.0005	.001	.09	.033	-15.0	31.3	.053	.010	.003	-.001	-.2	.2	.003	.6	.2	.314	.0004	11.7	.150	.082	.050	1.167
0	0	11	17	5	11	18	0	15.14	4.82	22.2	-.0005	-.001	.13	.230	17.2	44.0	.057	.019	.007	-.001	-.2	2.0	.002	3.8	.6	.523	.0006	11.8	.098	.054	.502	1.040
0	0	11	18	0	11	19	18	6.17	5.21	7.0	-.0005	.003	.25	.037	-15.0	42.7	.069	.017	.007	.002	-.2	.2	.008	1.0	.3	.376	.0003	13.2	.250	.242	.050	.908
0	0	11	19	18	11	23	0	30.20	4.52	17.1	-.0005	.008	.28	.045	16.6	70.0	.201	.036	.023	.002	-.2	.3	.015	.7	1.1	1.608	.0008	13.2	1.025	.269	.075	1.088
0	0	11	23	0	11	24	16	4.90	5.31	4.0	-.0005	.003	.22	.011	-15.0	43.7	.014	.011	.008	.001	-.2	-.2	.008	-.2	-.2	.217	.0001	13.2	.075	.216	.025	2.912
0	0	11	24	16	11	24	15	8.91	5.05	17.5	-.0005	.002	.15	.200	-15.0	52.9	.045	.080	.010	.003	-.2	1.7	.007	3.1	.5	.204	.0006	11.8	.073	.085	.427	1.106
0	0	11	24	15	11	25	8	6.76	5.17	14.5	-.0005	.003	.15	.180	-15.0	48.9	.017	.013	.009	.001	-.2	1.5	.006	2.7	.2	.368	.0002	9.2	0.000	.093	.377	1.134
0	0	11	26	19	12	5	8	60.26	4.22	27.7	-.0005	.012	.37	.044	66.6	114.0	.141	.054	.035	.005	-.2	.3	.030	.7	1.8	2.852	.0007	7.9	1.725	.359	.075	1.025
AVERAGES								12.02 (4.92)	5.04	13.8	-.4459	-.004	-.29	-.115	-14.8	-49.9	1.558	.022	-.010	-.005	-.1	-.75	-.032	-1.35	-1.14	.759	-.0426	10.3	1.093	.271	.192	1.159

REMARKS : (1) UNKNOWN START OR END TIMES ARE DESIGNATED BY 99. (2) HYDROGEN ION VALUES (H+) ARE COMPUTED FROM THE MEASURED PH. THE AVERAGE PH IS AN ARITHMETIC AVERAGE WHILE THE NUMBER IN PARENTHESES IS THE AVERAGE PH COMPUTED FROM THE H+ VALUES. (3) CONDUCTANCE IS EXPRESSED IN MICRO-SIEMENS/CM., STRONG ACID, TOTAL ACID & H+ ARE EXPRESSED IN MICRO EQUIVALENTS/LITRE. (4) CD, CU, FE, PB, MN & ZN ARE EXTRACTABLE AMOUNTS. (5) MINUS SIGNS FLAG VALUES THAT ARE BELOW DETECTION LIMITS. WHEN THE AVERAGES ARE COMPUTED, 1/2 THE DETECTION LIMIT IS USED AND THE AVERAGE VALUE IS AGAIN FLAGGED WITH A MINUS SIGN. (6) MISSING DATA ARE DESIGNATED BY -.9. (7) THE CATCH AMOUNTS ARE CALCULATED FROM THE SAMPLE VOLUME AND ARE EXPRESSED IN MILLIMETRES OF RAINFALL, WITH A FULL SAMPLER BEING APPROX. 34 MM. (8) THE ION BALANCE (+/-) IS COMPUTED FROM THE SUM OF H+, CA++, MG++, NH4+, K+ & NA+ DIVIDED BY THE SUM OF CL-, SO4-- & NO3-. VALUES BELOW THE DETECTION LIMITS ARE HANDLED AS ABOVE.

LOWER MAINLAND ACID RAIN STUDY
****
WHISTLER MTN , B.C.
****
JAN 82-MAR 82
(VALUES ARE EXPRESSED IN MG PER LITRE)

EVENT	PERIOD MO	DY	HR	MO	DY	HR	H+	PH	COND	CD	CU	CA++	MG++	S.ACID	T.ACID	NH4+	FE	PB	MN	K+	NA+	ZN	CL-	SO4--	NO3-	AS	CATCH	EXCESS SO4	CA	SEA SO4	+/-
2	0	1	22	99	1	25	99	2.57	5.59	1.5	-.0005	.003	-.01	-.005	-15.0	27.4	-.003	.002	-.001	.001	-.2	-.2	.002	-.2	-.2	.071	-.9000	-.9	.075	.001	.025	1.656
3	0	1	25	9	1	27	9	3.39	5.47	2.1	-.0005	.003	.01	-.005	-15.0	25.5	-.003	.001	-.001	-.001	-.2	-.2	.001	-.2	-.2	.080	-.9000	-.9	.075	.006	.025	1.790
4	0	1	29	9	1	30	9	1.66	5.78	3.2	-.0005	.003	.16	.018	-15.0	27.8	.013	.005	-.001	.001	-.2	-.2	.004	-.2	-.2	.213	-.9000	-.9	.075	.156	.025	2.249
5	0	1	30	9	1	31	14	1.48	5.83	2.9	-.0005	.004	.13	.010	-15.0	20.8	.015	.002	.001	-.001	-.2	-.2	.007	-.2	-.2	.102	-.9000	-.9	.075	.126	.025	2.524
7	0	2	11	14	2	12	9	5.75	5.24	3.0	-.0005	-.001	-.01	-.005	-15.0	28.6	.003	.004	-.001	-.001	-.2	-.2	-.001	-.2	-.2	.204	-.9000	-.9	.075	.001	.025	1.621
8	0	2	12	14	2	14	14	3.09	5.51	2.2	-.0005	.002	-.01	-.005	-15.0	23.3	-.003	.001	.002	-.001	-.2	-.2	.001	-.2	-.2	.146	-.9000	-.9	.075	.001	.025	1.452
11	0	2	26	16	3	1	14	3.80	5.42	2.5	-.0005	.003	.05	.007	-15.0	29.8	.006	.001	-.001	-.001	-.2	-.2	.002	-.2	-.2	.155	-.9000	-.9	.075	.046	.025	1.907
AVERAGES							3.11 (5.51)	5.55	2.5	-.0002	-.003	-.05	-.006	-7.5	26.2	-.006	.002	-.001	-.001	-.1	-.10	-.002	-.10	-.10	.139	-.9000	-.9	.075	.048	.025	1.886

REMARKS : (1) UNKNOWN START OR END TIMES ARE DESIGNATED BY 99. (2) HYDROGEN ION VALUES (H+) ARE COMPUTED FROM THE MEASURED PH. THE AVERAGE PH IS AN ARITHMETIC AVERAGE WHILE THE NUMBER IN PARENTHESES IS THE AVERAGE PH COMPUTED FROM THE H+ VALUES. (3) CONDUCTANCE IS EXPRESSED IN MICRO-SIEMENS/CM., STRONG ACID, TOTAL ACID & H+ ARE EXPRESSED IN MICRO EQUIVALENTS/LITRE. (4) CD, CU, FE, PB, MN & ZN ARE EXTRACTABLE AMOUNTS. (5) MINUS SIGNS FLAG VALUES THAT ARE BELOW DETECTION LIMITS. WHEN THE AVERAGES ARE COMPUTED, 1/2 THE DETECTION LIMIT IS USED AND THE AVERAGE VALUE IS AGAIN FLAGGED WITH A MINUS SIGN. (6) MISSING DATA ARE DESIGNATED BY -.9. (7) THE CATCH AMOUNTS ARE CALCULATED FROM THE SAMPLE VOLUME AND ARE EXPRESSED IN MILLIMETRES OF RAINFALL, WITH A FULL SAMPLER BEING APPROX. 34 MM. (8) THE ION BALANCE (+/-) IS COMPUTED FROM THE SUM OF H+, CA++, MG++, NH4+, K+ & NA+ DIVIDED BY THE SUM OF CL-, SO4-- & NO3-. VALUES BELOW THE DETECTION LIMITS ARE HANDLED AS ABOVE.

APPENDIX B

ANALYTICAL METHODS

Calcium, Dissolved

A sample aliquot is mixed with a standard $LaCl_3$ solution. The mixed sample solution is aspirated into an atomic absorption spectrophotometer burner. The absorption by the flame at 422.7 nm is measured spectrophotometrically, and compared with those of standard Ca solutions.

Magnesium, Dissolved

$LaCl_3$ solution is added to a sample aliquot. Then the sample solution is aspirated into an atomic absorption spectrophotometer burner. The absorption by the flame at 285.2 nm is measured spectrophotometrically and compared with those of standard Mg solutions.

Acidity (Strong & Total)

A glass electrode, calibrated with pH 4.0 H_2SO_4 standard, is used with a digital pH/mV meter to measure sample pH. Acidity is determined on a sample aliquot by titration with micro litre increments of 1.0×10^{-2} N NaOH. The amount of NaOH added to the sample is plotted against the Gran's function, calculated from the mV readings obtained during the titration. Strong and weak acid components are calculated by extrapolating lines of data points to the X (concentration) axis.

pH

The pH of the sample is measured using a pH meter which has been calibrated with standard pH buffer solutions. Glass and calomel electrodes are used. The solution is stirred for 30 seconds before the measurement is made.

Specific Conductance

Specific Conductance is measured by a conductivity meter with platinum electrodes and then corrected to 25°C.

Chloride, Dissolved

Chloride is determined by an automated colormetric method using an autoanalyzer. An aliquot of sample is mixed with a premixed solution containing $Hg(SCN)_2$ and $Fe(NO_3)_3$. The resulting color is measured spectrometrically at 480 nm and compared with those of identically prepared standard Cl ion solutions.

Sodium, Dissolved

Sodium is determined by flame photometry on an autoanalyzer. A sample aliquot is mixed with standard $LiNO_3$, 1% V/V H_2SO_4 solution. This solution is aspirated into a flame photometer. The light emission is measured at 589 nm and compared with that of internal Li standard at 671 nm. The flame photometer is calibrated using standard Na solutions using Li internal standards. A propane - oxygen oxidizing flame is used.

Sulphate, Dissolved

Sulphate is determined colorimetrically on an autoanalyzer. The sulphate ion in a sample aliquot is reacted with an equimolar solution of barium chloride and methylthymol blue at pH 2.5 - 3.0. The pH is raised to 12.5 - 13.0 where excess barium will complex with methylthymol blue in solution. The absorbance of excess methylthymol blue is measured at 460 nm.

Potassium, Dissolved

Potassium is determined by flame photometry on an autoanalyzer. A sample aliquot is mixed with $LiNO_3$, 1% V/V H_2SO_4 solution. This solution is aspirated into a flame photometer. The light emission is measured at 768 nm and compared with that of the internal Li standard at 671 nm. The flame photometer is calibrated using K standard solutions with Li internal standards. A propane - oxygen oxidizing flame is used.

Extractable Cadmium, Copper, Iron, Lead and Zinc

Extractable cadmium, copper, iron, lead and zinc are determined by atomic absorption spectrophotometry with solvent extraction. The sample is acidified with nitric acid (2 mL/litre), shaken and left overnight. A buffer solution is added to an aliquot of the acidified sample to adjust the pH to 4.75. Then ammonium pyrrolidine dithiocarbamate is added to the buffered sample to complex the metals. The metal complexes are extracted by methyl isobutyl ketone. The solvent layer is aspirated into the atomic absorption spectrophotometer burner and the metals are measured spectrophotometrically under the following conditions and compared with identically prepared standards.

Metal	Wave Length	Fuel	Oxident	Type of Flame
Cadmium	228.8 nm	Acetylene	Air	Oxidizing
Copper	324.7 nm	Acetylene	Air	Oxidizing
Iron	248.3 nm	Acetylene	Air	Oxidizing
Lead	283.3 nm	Acetylene	Air	Oxidizing
Zinc	213.8 nm	Acetylene	Air	Oxidizing

Manganese, Extractable

Manganese extractable is determined on an acidified sample by atomic absorption spectrophotometry using a heated graphite furnace with back ground correction under the following conditions and compared with identically prepared standards:

Sample Size	Drying Temp.	Charring Temp.	Atomizing Temp.	Wave Length
100 uL	110°C @ 70 sec.	1100°C @ 60 sec.	2,700°C @ 6 sec.	279.8 nm

Nitrogen, Nitrate-Nitrite

Nitrate and nitrite is determined colorimetrically using an autoanalyzer. A sample aliquot is passed through a column containing copper coated cadmium filings to reduce the nitrates in the sample to nitrites. The resulting nitrites plus those originally present then reacts with sulphanilamide to form a diazo dye. The diazotized sample is then reacted with N-(1-naphthyl) ethylenediamine dihydrochloride to from an azo dye. The azo dye intensity is measured at 550 nm on a Technicon colorimeter and compared with identically prepared standards.

Nitrogen, Ammonia

Ammonia is determined by an automated colorimetric method using an autoanalyzer. A sample aliquot is mixed with alkaline phenol, sodium hypochlorite and sodium nitroprusside solutions respectively. The indophenol blue formed is measured at 630 nm using a Technicon colorimeter and compared with identically prepared standards.

Arsenic

Arsenic is determined by a semi-automated flameless Atomic Absorbtion procedure. A 50 ml sample aliquot is boiled for 15 minutes with 5 ml of 2% potassium persulfate and 1 ml of concentrated HCl on a shaker hotplate. After cooling, the solution is made up to 50 ml volume, then an aliquot is mixed with a solution of potassium iodide and stannous

chloride in an automated system to reduce all arsenic forms to arsenite. This arsenite solution is further reduced to arsine with hydrogen from an aluminum-acid hydrogen generator. The arsine vapour is separated from the solution and swept through a heated open tube furnace where it is measured by Atomic Absorbtion Spectrophotometry.