RRB-89-75

This manuscript has been prepared for

Journal of Ground Water

and the contents are subject to change.

This copy is to provide information

prior to publication.

MEASUREMENT OF THE RETARDATION FACTOR USING A COLUMN TEST METHOD

by
M.W. Priddle and R.E. Jackson*

National Water Research Institute
Canada Centre for Inland Waters
Burlington, Ontario, L7R 4A6
* Present address:
Intera Inc.
680 Austin Center Blvd.
Austin, Texas 78731
October 1989

NWRI Contribution #89-173

ABSTRACT

A new laboratory column technique was developed to measure retardation factors (R_f) of volatile organic compounds using geological material obtained from an outwash aquifer underlying a solvent disposal site near Ottawa, Canada. The apparatus was designed as a closed system from sample introduction to analysis in order to measure the retardation of volatile compounds including 1,4-dioxane, diethyl ether, 1,2-dichloroethane, trichloromethane (chloroform), 1,1-dichloroethene and benzene. The centres of mass of both contaminant and aconservative tracer breakthrough curve were compared to determine these R_fs. The measured values range from 1.1 to 14.3 and compare favourably with those derived from contaminant plume lengths and a purge well test conducted at the site.

RÉSUMÉ

Une nouvelle technique de laboratoire faisant appel à des colonnes a été mise au point dans le but de mesurer les facteurs de retard (R_f) de composés organiques volatils, à l'aide de matériaux géologiques provenant de l'aquifère alluvionnaire sur lequel repose un site de rejet de solvants à proximité d'Ottawa (Ontario). L'appareil a été conçu comme un système clos à partir de l'étape de l'introduction de l'échantillon jusqu'à l'étape de l'analyse, afin de mesurer le retard de l'écoulement de composés volatils, dont le 1,4-dioxane, l'éther diéthylique, le 1,2-dichloroéthane, le trichlorométhane (chloroforme), le 1,1-dichloroéthène et le benzène. Nous avons comparé les centres de masse de la courbe de passage du contaminant et de la courbe de passage d'un traceur classique, dans le but de déterminer ces R_f. Les valeurs mesurées varient de 1,1 à 14,3 et se comparent favorablement à celles obtenues à partir de la longueur des panaches de contaminants et des résultats d'un esssai en puits de purge réalisé sur le site.

MANAGEMENT PERSPECTIVE

Groundwaters beneath the Federal Special Waste Compound at the Gloucester, Ontario landfill became contaminated due to the disposal of laboratory solvents by EPS during the period 1972-80. A plume of contaminated groundwater is now moving away from the site. This plume of toxic organic chemicals has been well defined by Environment Canada scientists over the last eight years. These chemical have been found to migrate a widely varying rates depending upon their retardation factors.

This paper describes a laboratory procedure that has been developed to simulate the migration of organic chemicals in groundwater. Aquifer material from the Gloucester Landfill is repacked in laboratory columns and contaminated water is passed through. By monitoring the concentration of these contaminants in the effluent, retardation factors can be derived. It is these factors that determine how fast a particular contaminant will travel with respect to the average groundwater flow velocity.

Applications may be found in optimizing groundwater remediation schemes that involve purge wells. Flow rates can easily be increased using this column apparatus in order to simulate the high groundwater flow rates encountered during "pump and treat" operations.

PERSPECTIVE-GESTION

Les eaux souterraines s'écoulant sous l'enceinte pour déchets spéciaux du gouvernement fédéral, située dans la décharge de Gloucester (Ontario) ont été contaminées à la suite du rejet de solvants de laboratoire par le SPE au cours de la période 1972-1980. Un panache d'eaux souterraines contaminées s'éloigne maintenant du site. Au cours des huit dernières années, les scientifiques d'Environnement Canada ont bien défini ce panache de produits organiques toxiques. Ces produits, ont-ils constaté, se déplacent à des vitesses très diverses selon leurs facteurs de retard.

On décrit, dans cette communication, une méthode de laboratoire permettant de simuler le déplacement de produits organiques dans les eaux souterraines. On passe de l'eau contaminée dans des colonnes de laboratoire garnies avec des matériaux de l'aquifère se trouvant sous la décharge de Gloucester. On peut calculer les facteurs de retard en suivant la concentration des contaminants dans l'effluent. Ce sont ces facteurs qui déterminent la vitesse à laquelle un contaminant donné se déplace par rapport à la vitesse moyenne des eaux souterraines.

Cette méthode peut être appliquée, entre autres, à l'optimisation des mesures de dépollution faisant appel à des puits de purge. Elle permet d'augmenter facilement le débit et ainsi de simuler les débits élevés observés au cours des travaux de "pompage et de traitement".

INTRODUCTION

Decontamination of groundwater containing dissolved organic constituents is most often conducted using pump and treat systems (Mackay and Cherry, 1989). This involves pumping large volumes of contaminated ground water and treating it at the surface. Because of the expense and time involved in the construction and operation of these systems, they must be designed in a manner that will result in aquifer decontamination in the minimum possible time and with the fewest wells. Clean up of the aquifer to the desired levels should be accomplished by pumping the smallest volume of water possible. The optimal design is further complicated because organic chemicals move at lower velocities than the ground water itself. Therefore an estimation of relative contaminant velocity is essential (Mackay and Cherry, 1989).

The migration of organic solutes in ground water has been described by Schwarzenbach and Westall (1981); Chiou et al., (1983); Karickhoff (1984); Roberts et al., (1986) and shown to be a function of sorption onto aquifer solids. This sorption of hydrophobic organic compounds is presumed to be due to partitioning between the organic phase of the aquifer material and the ground water (Schwarzenbach and Westall, 1981). It has been shown that the retardation of organic compounds is proportional to the hydrophobicity of each compound and the organic carbon content of the aquifer material through which it is migrating (McCarty et al., 1981). Consequently, sorption and therefore retardation, are site specific. In cases where the organic carbon content of materials is low (e.g. outwash aquifers), it is

possible that sorption to mineral surfaces occurs (Curtis et al., 1986). Comparison of retardation between sites based upon the f_{oc} of the aquifer material may be limited because of the difficulty in accurately measuring low organic carbon content.

Irregardless of the exact mechanism(s) of sorption it is necessary to determine the extent of retardation of individual contaminants at a particular site if pump and treat methods are to be effective (Lefkoff and Gorelick, 1986). Bahr (1989) showed that ground water velocity affects retardation measurement, consequently laboratory column tests are particularly useful since flow velocities can easily be varied. At higher velocities reversible sorption-desorption of hydrophobic compounds does not proceed at a rate sufficient to reach local equilibrium, thus the volume of water that must be purged to reach a desired concentration is increased.

Also, retardation factors have been found to vary with time and distance. In a natural gradient experiment, Roberts et al., (1986) found a steady increase in retardation factors for a number of solutes over a two year observation period. They attributed this to sorption rate limitation; i.e. slow uptake of the organic solutes.

The parameter most frequently used to estimate contaminant mobility is the retardation factor, R_f, which is given by Freeze and Cherry (1979), p. 404 as:

$$R_f = 1 + \rho_b K_d / n \qquad (1)$$

where ρ_b and K_d and n are the bulk density, the contaminant distribution coefficient and the porosity of the aquifer material, respectively. The distribution coefficient (K_d) can be estimated directly from batch sorption or isotherm tests or indirectly from an equation based upon a compound's octanol-water partition coefficient (K_{ow}) and the fraction of organic carbon (f_{oc}) in the aquifer material (Schwarzenbach and Westall, 1981). R_f may be estimated by several methods, including (1) batch adsorption isotherms to evaluate K_d (e.g. Curtis et al., 1986); (2) field injection tests (e.g. Roberts et al., 1986; Borden and Bedient, 1987; and Bahr, 1989); (3) measurement of plume lengths (e.g. Patterson et al., 1985); and (4) laboratory column tests (e.g. Bouchard et al., 1988; and Lee et al., 1988).

Batch test procedures involve relatively simple laboratory experiments except in the case of volatile organic compounds (VOC). Aqueous solutions of the contaminants of interest are equilibrated with the sorbent (i.e. aquifer material) and isotherms are derived from which a distribution coefficient can be calculated. Loss by volatilization must be prevented in order to accurately determine uptake of the sorbates. However these procedures have the disadvantage that the physical and chemical nonequilibrium processes that are apparent in the transport of retarded contaminants cannot be reproduced.

The field injection test method requires a well defined test site in the aquifer of concern and a number of personnel to conduct a continuous injection/withdrawal test over a period of several days. The measurement of plume lengths method requires a dense network of

monitoring wells at the site in question so that individual contaminant plumes might be mapped; this requirement is seldom met at hazardous waste sites. Column tests require that a well-equipped laboratory with facilities for a column test and for the analysis of the contaminants of interest be available. Consequently, laboratory column methods may be the most practical and inexpensive method of estimating R_f for operational purposes.

Current laboratory column methods have been used with a wide variety of organic compounds to determine migration and fate processes in the subsurface. These methods have generally been used for more hydrophobic and/or less volatile compounds (e.g. Lee et al., 1988 (trichloroethene and p-xylene); Bouchard et al., 1988 (herbicides)). Thus, there was a need to develop a method for very volatile compounds which could also be verified with data from a well-defined field site. By comparing column results with field data it is possible to evaluate the effects, if any, of both a smaller scale and a more homogeneous medium.

Table 1 lists a number of methods of calculation that have been used to estimate retardation factors from field and laboratory data. Most of these methods are similar in that they compare the movement of a retarded contaminant to that of water as determined by some conservative tracer. Contaminant breakthrough curves (BTC) may vary in shape depending upon sorption or biodegradation reactions and the influence of hydrodynamic processes. Symmetric BTCs showing full mass recovery are indicative of a nonsorbing, nonbiodegradable compound (McCarty et al., 1981). The BTCs of more retarded compounds show greater asymmetry indicating nonequilibrium sorption (Lee et al.,

1988). As Winters and Lee (1987) pointed out, the evaluation of R_f from asymmetric BTCs by different methods leads to different values.

Models based on the advective/dispersive model of contaminant transport can be used with least squares optimization techniques to fit parameters (e.g. R_f) to column or field data (e.g. Parker and van Genuchten, 1984; Lee et al., 1988). With these models sorption is described either by the local equilibrium assumption (LEA) or a nonequilibrium (kinetic) model that assumes two types of sites; one at which sorption is instantaneous and the other where sorption is time dependent.

The objective of this study is to develop a new laboratory column technique to measure retardation factors for volatile organic chemicals in ground water. Different evaluation techniques were used to determine appropriate R_f values from these data. The measured values from the laboratory column experiments are compared with other estimates of R_f using data from a site near Ottawa, Canada (Gloucester landfill site, Figure 1), which has been the subject of an extensive case study (Jackson et al., 1985; Patterson et al., 1985; Jackson et al., 1989; Jackson and Patterson, 1989; and Lesage et al., 1989) of the mobility of volatile organic contaminants.

METHODOLOGY

The method used to estimate R_f values for VOCs in the Gloucester aquifer involved packing a short glass column (7 cm in diameter by 16 cm in length) with aquifer material. The repacking was

conducted in such a manner as to replicate field conditions (i.e. bulk density and porosity) as closely as possible. The column, shown in Figure 2, was fitted with stainless steel end plates holding a fritted glass disk (5.5 µm) that allowed the entry and elution of the spiked ground water. After dry-packing, the column was slowly filled from below with deaerated ground water. During operation it was wrapped with aluminum foil to protect it from light.

The aquifer material was obtained from a core of outwash aquifer sands taken at a depth of 15 m below ground surface and 100 m from the contaminant source (see Figure 1). It was analyzed for organic carbon content (wet oxidation method, f_{oc} = 0.00075) and grain size distribution prior to its being dried and repacked. The complete column apparatus including the sampling system is shown in Figure 3. The ground water supply was taken from a sampling point upgradient of the contaminant source (Figure 1) and passed through a 0.20 µm filter to remove microorganisms and silt. The pH of the ground water was measured before and after passage through the column.

A small variable flow rate tubing pump (Sage Instruments) was used to pump the column water. Flow rates were measured by collecting water at the column exit before and after the test. A pulse of water containing the contaminants and a conservative tracer (iodide) was added just prior to the column using a syringe pump (Sage Instruments). The input concentrations were measured by analysing a sample collected in a Tedlar (polyvinyl fluoride) bag at the sample port just prior to the column (see Figure 3).

The column effluent was collected sequentially in evacuated Tedlar bags each fitted with a Teflon on/off valve and connected to a sixteen port valve (Valco Instrument Co.). The valve actuator was controlled by a valve sequencer which could vary the filling time of each bag. The bags were disconnected after filling and a syringe was used to remove a sample of the effluent for injection into a purge and trap unit connected to a Hewlett Packard GC/MSD (Gas Chromatograph - Mass Selective Detector). The complete column apparatus was operated in a dark cold room at the average ground water temperature at the site (9°C).

In addition to the aquifer materials themselves, the organic solution comes into contact with Teflon (tubing, fittings and syringe), stainless steel (mixer, column ends and valve), glass (syringe and column walls) and Tedlar (sample bags). With the exception of Tedlar, the other three materials are recommended for sampling water contaminated with volatile organics (Barcelona et al., 1985). Maskarinec et al., (1989) have shown that aqueous standards of volatile organic chemicals can be successfully stored in Tedlar bags for at least 3 days. Dilutions of the precolumn sample that was collected and stored in a Tedlar bag, were used as standards over the course of the test. In this manner it was possible to correct for any losses due to sorption and volatilization of the analytes between sample collection and analysis.

One of the advantages of these bags is that it was possible to collect the water samples with negligible headspace. The work of Pankow (1986) suggests such small bubbles may cause minor losses of

the volatile organic compounds. Furthermore, the samples were all analysed by purge and trap GC/MSD within 48 hours of being collected.

Breakthrough curves were prepared by dividing the concentration (C) of each compound in the effluent sample by its initial concentration (C_0) to obtain a relative concentration (C/C_0). These values were then plotted against the number of pore volumes (or time) that each sample represented. Mass recoveries were calculated using the trapezoidal rule to determine the area under each curve and comparing this value with the hypothetical area of an ideal solute plug. The number of pore volumes at the midpoint of the area beneath each curve was defined as the centre of mass of the particular contaminant.

A number of tests were conducted using the column apparatus with a variety of organic contaminants found in the ground waters beneath the Gloucester site (1,4-dioxane (DIOXANE), diethyl ether (DEE), 1,2-dichlorethane (1,2-DCA), trichloromethane (TCM), 1,1-dichloroethene (1,1-DCE) and benzene (BENZ)). These organic chemicals represent a range of chemical classes (aliphatic ethers, chlorinated 1 and 2-carbon compounds and an aromatic compound), aqueous solubilities and volatilities (Table 2).

The particular column experiment discussed here was conducted for 11 days at an average linear ground water velocity of 45 cm/day (cf. aquifer - 7cm/day). In this test sodium azide (NaN_3) was added to the feed water to inhibit biodegradation. A 0.65 pore volume pulse of water containing iodide, DIOXANE, DEE, 1,2-DCA, TCM, 1,1-DCE and BENZ was introduced and samples of the effluent were collected for 30.5 pore volumes. The initial concentrations of the organics were in the

range of 500 to 1250 µg/L which is representative of concentrations found at the Gloucester site. Relative standard deviations from the triplicate analysis of the precolumn standard (diluted ten times) ranged from 0.2% for 1,2-DCA to 14.8% for 1,1-DCE.

RESULTS AND DISCUSSION

Breakthrough curves for iodide and DEE are shown in Figure 4 and those of 1,2-DCA, TCM, 1,1-DCE and BENZ are presented in Figure 5. Note that the scale of relative concentration (C/C_0) in Figure 5 is only from 0 to 0.1. With the retarded compounds a pulse input of 0.65 pore volume was not large enough to allow the effluent concentration to reach the initial concentration (C_0).

Mass balance calculations were made to estimate the recovery of the solutes and to determine if biodegradation and/or irreversible sorption were occurring. These calculations were difficult to do because the concentrations of the four retarded solutes had not returned to zero when the analyses were terminated after about 30 pore volumes had been pumped through the column (Figure 5). However calculations did show that greater than 80% of all the solutes except benzene were recovered by that time. The centres of mass were therefore calculated based upon an extrapolation of the BTCs.

Field retardation factors that were calculated by comparing the lengths of contaminant plumes at the Gloucester site (Patterson et al., 1985) and values derived from a purge well test also conducted at this site (Whiffin and Bahr, 1985) are presented in Table 3. From the plume length data, Patterson et al., (1985) derived a correlation

equation to calculate R_fs based on K_{ow} obtained from the individual compound. These three methods are compared with results from laboratory column experiments.

Estimates of R_f were first calculated by comparing the time to reach C/C_{max} for each contaminant versus that for the iodide tracer. As numerous other researchers (e.g. Winters and Lee, 1987) have found, this evaluation of R_f neglects the significant tailing that occurs with strongly retarded compounds. Thus, in addition, the centres of mass of both contaminant and iodide were compared in a procedure similar to that of Winters and Lee (1987) and Roberts et al., (1986) in order to derive an R_f. The position of centre mass is indicated for iodide and diethyl ether on Figure 4. It was these retardation factors, derived from centre of mass calculations, that fit most closely the correlation equation of Patterson et al., (1985), (Table 3).

For the less retarded compounds (i.e. DIOXANE and DEE), similar R_f values were determined using the C/C_{max}=0.5 method and the centre of mass calculations. This is due to the symmetrical nature of their BTCs with less tailing indicating greater sorption equilibrium during transport (Lee et al., 1988), that is, the assumption of local equilibrium is satisfied.

As shown in Table 3 the different retardation factor evaluation methods may result in different values. Patterson et al., (1985) and Curtis et al., (1986) found that retardation factors calculated from the equation of Schwarzenbach and Westall (1981) were small compared to field values. The empirical correlation of Schwarzenbach and Westall (1981) was based upon compounds with much higher log K_{ow}s

(2.6-4.7) and sorbents with organic content greater than 0.1%. Curtis et al., (1986) attribute this underestimation to the fact that their correlation does not take into account sorption onto mineral surfaces. Similarly these column experiments have shown that retardation is underestimated by the equation and, furthermore, the relative retardation of certain VOCs is not directly proportional to their K_{OW}. This phenomenon has been observed by others as well (e.g. Curtis et al., 1986). These differences may also be attributed to problems with the actual measurement of the organic carbon content of aquifer materials. Curtis et al., (1986) discuss the possibility that root hairs and woody fragments may increase the overall f_{OC} but contribute little to sorption.

SUMMARY AND CONCLUSIONS

It is imperative that site-specific measurements of the migration of volatile organic contaminants relative to ground water be determined in order for pump and treat systems to function effectively. For example, pumping rates should be adjusted to reflect retardation of particular contaminants (Lefkoff and Gorelick, 1986). Laboratory column experiments were chosen in order to evaluate these factors because they are relatively simple and yet replicate field processes.

The column apparatus was designed as a closed system (point of contaminant input to sample analysis) to prevent the loss of volatile compounds. Breakthrough curves were generated by measuring

concentrations of the iodide tracer and organic contaminants at regular intervals. The values were then normalized by dividing the effluent concentrations by the input concentrations and plotted against time or pore volumes. The centres of mass of these curves were determined using the trapezoidal rule. Retardation factors were calculated by comparing the contaminant centres of mass in time versus that of iodide.

The information on contaminant hydrogeology collected at the Gloucester site was used to validate this method of R_f calculation. Laboratory column values compared well with data from the plume lengths and a purge well test. The correlation equation developed by Patterson et al., (1985) that was generated from data for 1,4-dioxane, tetrahydrofuran, diethyl ether, 1,2-dichloroethane, benzene and carbon tetrachloride gave values that were close to the column R_fs for trichloromethane and 1,1-dichloroethene. It was on this basis that the centre of mass calculations were felt to be the most accurate. Thus, this work shows that laboratory column experiments can be used to evaluate retardation factors for application to field sites.

ACKNOWLEDGEMENTS

The authors would like to thank R.J. Patterson for his work during the early development of this column procedure and S. Shikaze for his programming assistance. The comments of K.S. Novakowski and A.S. Crowe were also greatly appreciated.

REFERENCES

Bahr, J.M., 1989. Analysis of nonequilibrium desorption of volatile organics during field test of aquifer decontamination. J. Contam. Hydrol. 4: 205-222.

Barcelona, M.J., Gibb, J..P., Helfrich, J.A. and Garske, E.A., 1985. Practical Guide for Ground-Water Sampling. ISWS Contract Report 374, Illinois State Water Survey, Champaign, IL.

Borden, R.C. and Bedient, P.B. 1987. In situ measurement of adsorption and biotransformation at a hazardous waste site. Water. Res. Bull. 23(4): 629-636.

Bouchard, D.C., Wood, A.L., Campbell, M.L., Nkedi-Kizza, P., and Rao, P.S.C., 1988. Sorption nonequilibrium during solute transport. J. Contam. Hydrol. 2: 209-223.

Chiou, C.T., Porter, P.E. and Schmedding, D.W., 1983. Partition equilibria of nonionic organic compounds between soil organic matter and water. Environ Sci. Technol. 17(4): 227-231.

Curtis, G.P., Roberts, P.V. and Reinhard, M., 1986. A natural gradient tracer experiment on solute transport in a sand aquifer: 4. Sorption of organic solutes and its influence on mobility. Water Resour. Res. 22 (13): 2059-2067.

Freeze, R.A., and Cherry, J.A., 1979. Groundwater. Prentice-Hall Inc., Englewood Cliffs, NJ.

Hansch, C. and Leo, A., 1979. Substituent Constants for Correlation Analysis in Chemistry and Biology. Wiley-Interscience, New York, NY.

Horvath. A.L., 1982. Halogenated Hydrocarbons: Solubility - Miscibility with Water. Marcel Dekker, New York, NY.

Jackson, R.E., Patterson, R.J., Graham, B.W., Bahr, J.M., Belanger, D.W., Lockwood, J.L., and Priddle, M. 1985. Contaminant hydrogeology of toxic organic contaminants at a disposal site, Gloucester, Ontario. 1. Chemical concepts and site assessment. IWD Scientific Series No. 141, Ottawa, Canada.

Jackson, R.E., Crowe, A.S., Lesage, S., and Priddle, M.W. 1989. Aquifer contamination and restoration at the Gloucester Landfill, Ontario Canada. In: Groundwater Contamination, Proc. Symp., Third IAHS Scientific Assembly, Baltimore, MD, May 1989, IAHS Publication No. 185: 181-188.

Jackson, R.E., and Patterson, R.J. 1989. A remedial investigation of an organically polluted outwash aquifer. Ground Water Monitoring Rev. 9(3): 119-126.

Karickhoff, S.W., 1984. Organic pollutant sorption in aquatic systems. Am. Soc. Civ. Eng., J. Hyd. Eng. 110: 707-735.

Lee, L.S., Rao, P.S.C., Brusseau, M.L. and Ogwada, R.A. 1988. Nonequilibrium sorption of organic contaminants during flow through columns of aquifer materials. Environ. Toxicol. Chem. 7: 779-793.

Lefkoff, L.J. and Gorelick, S.M. 1986. Design and cost analysis of rapid aquifer restoration systems using flow simulation and quadratic programming. Ground Water 24(6): 777-790.

Lesage, S., Jackson R.E., Priddle, M.W., and Riemann, P. 1989. Occurrence and fate or organic solvent residues in anoxic groundwater at the Gloucester Landfill, Canada. Submitted to Environ. Sci. Technol.

Maskarinec, M.P., Johnson, L.H. and Bayne, C.K. 1989. Preparation of reference water and soil samples for performance evaluation of volatile organic analysis. J. Assoc. Off. Anal. Chem. 72(5): 823-827.

Mackay, D. and Leinonen, P.J. 1975. Rate of evaporation of low-solubility contaminants from water bodies to atmosphere. Environ. Sci. Technol 9(13): 1178-1180.

Mackay, D.M. and Cherry, J.A. 1989. Groundwater contamination: Pump-and-treat remediation. Environ. Sci and Technol. 23(6): 630-636.

McCarty, P.L., Reinhard, M., and Rittman, B.E., 1981. Trace organics in ground water. Environ. Sci. Technol. 15 (1): 40-51.

Pankow, J.F. 1986. Magnitude of artifacts caused by bubbles and headspace in the determination of volatile compounds in water. Anal. Chem. 58(87): 1822-1826.

Parker, J.C., and van Genuchten, M, Th. 1984. Determining transport parameters from laboratory and field tracer experiments. Bulletin 84-3. Virginia Agricultural Experiment Station, Virginia Polytechnic Institute and State University, Blacksburg, VA.

Patterson, R.J., Jackson, R.E., Graham, R.W., Chaput, D., and Priddle, M., 1985. Retardation of toxic chemicals in a contaminated outwash aquifer. Wat. Sci. Tech. 17: 57-69.

Roberts, P.V., Schreiner, J, and Hopkins, G.D., 1982. Field study of organic water quality changes during groundwater recharge in the Palo Alto Baylands. Water Res. 16: 1025-1035.

Roberts., P.V., Goltz, M.N., and Mackay, D.M., 1986. A natural gradient experiment on solute transport in a sand aquifer 3. Retardation estimates and mass balances for organic solutes. Water Resour. Res. 22(13): 0247-2058.

Schwarzenbach, R.P., and Westall, J., 1981. Transport of nonpolar organic compounds from surface water to groundwater. Laboratory sorption studies. Environ. Sci. Technol. 15(11): 1360-1367.

Verschueren, K. 1983. Handbook of Environmental Data on Organic Chemicals. 2nd Ed. Van Nostrand Reinhold Co., New York, NY.

Whiffin, R.B. and Bahr, J.M. 1985. Assessment of purge well effectiveness for aquifer decontamination. Proceedings of the Fourth National Symposium on Aquifer Restoration and Ground Water Monitoring. National Water Well Association. Dublin, OH.

Winters, S.L. and Lee, D.R. 1987. In situ retardation of trace organics in groundwater discharge to a sandy stream bed. Environ. Sci. Technol. 21(12): 1182-1186.

Table 1. Retardation factor calculation methods from field and column data.

R_f=	Variables	Reference
FIELD:		
L_{Cl}/L_i	L_{Cl} - length of chloride plume L_i - length of contaminant (i) plume	(Patterson et al.,1985).
t_i/t_{H_2O}	t_i - residence time of contaminant (i) t_{H_2O} - residence time of water	(Roberts et al., 1982).
V_{gw}/V_i	V_{gw} - ground water V_i- solute velocity	(Roberts et al., 1986).
COLUMN:		
V/V_o at $C=0.5\ C_o$	V - cumulative effluent volume V_o - pore volume C - effluent concentration Co - input concentration	(Bouchard et al.,1988).
area behind cont. breakthrough curve / area behind tracer breakthrough curve		(Bouchard et al., 1988).
t_i/t_{H_2O}	t_i - arrival time of centre of mass of contaminant (i) t_{H_2O} - arrival time of centre of mass of conservative tracer	(Winters and Lee, 1987).

Table 1. continued

R_f=	Variables	Reference
t_i/t_{H_2O}	t_i - arrival time of peak concentration of contaminant (i) t_{H_2O} - arrival of peak concentration of conservative tracer	(Winters and Lee, 1987).
V/V_o when $V = 0.5\ C_{max}$	V - cumulative effluent volume V_o - pore volume C - effluent concentration C_{max} - maximum effluent concentration	(this paper)
t_i/t_{H_2O}	t_i - arrival time of centre of mass of contaminant (i) t_{H_2O} - arrival of centre of mass of conservative tracer	(this paper)

Table 2. Selected properties of compounds used in the column experiment.

Compound	M.W.	log K_{ow}	Sol. (g/L)	V.P. (mm Hg)	H (atm-m^3/mol)
DIOXANE	88.2	-0.27	M	30	n.a.
DEE	74.1	0.89	69.0	442	0.000624
1,2-DCA	99.0	1.48	8.7	61	0.000913
TCM	119.4	1.97	8.0	160	0.003142
BENZENE	78.1	2.04	1.78	76	0.004387
1,1-DCE	96.9	2.13*	0.40+	500	0.159375

M.W. - molecular weight
K_{ow} - octanol-water partition coefficient (Hansch and Leo, 1979)
(* fragment constant method of Hansch and Leo, 1979)
Sol. - aqueous solubilities (20°C) (Verschueren, 1983)
M - miscible in all proportions
(+ Horvath, 1982)
V.P. - vapour pressure (20°C) (Verschueren, 1983)
H - Henry's law constant (V.P./Sol. (Mackay and Leinonen, 1975))
n.a. - not applicable

Table 3. Summary of retardation factors.

Compound	1 Plume Length	2 Purge Well	3 Correl. Eqn.	4 S & W Eqn.	5 Column C of M	6 Column C_{max}
DIOXANE	1.6	1.4	1.6	1.0	1.1	1.2
DEE	3.3	3.0	3.4	1.1	1.7	1.6
1,2-DCA	7.6	n.p.	5.7	1.2	7.2	5.0
TCM	n.m.	n.p.	9.3	1.3	7.5	5.0
BENZENE	8.8	n.p.	10.0	1.4	14.3	8.0
1,1-DCE	n.m.	n.p.	11.0	1.5	10.7	7.0

Retardation factors based on:

1 - Field data (length of organic plume vs. length of chloride plume), (Patterson et al., 1985).
n.m. - plume not mapped

2 - Purge well evaluation test, (Whiffin and Bahr, 1985).
n.p. - contaminant not present in test section

3 - Correlation $\log (R_f-1) = 0.5^* \log K_{ow}-0.065$ from field data (Patterson et al., 1985).

4 - Equation $R_f=1+\rho_b K_d/n$ where $K_d=3.2^*f_{oc}^*(K_{ow})^{0.72}$ (Schwarzenbach and Westall, 1981)

5 - Column test (centre of mass of organic vs. centre of mass of iodide)

6 - Column test ($C/C_{max}=0.5$ of organic vs. $C/C_{max} = 0.5$ of iodide)

LIST OF FIGURES

FIGURE 1

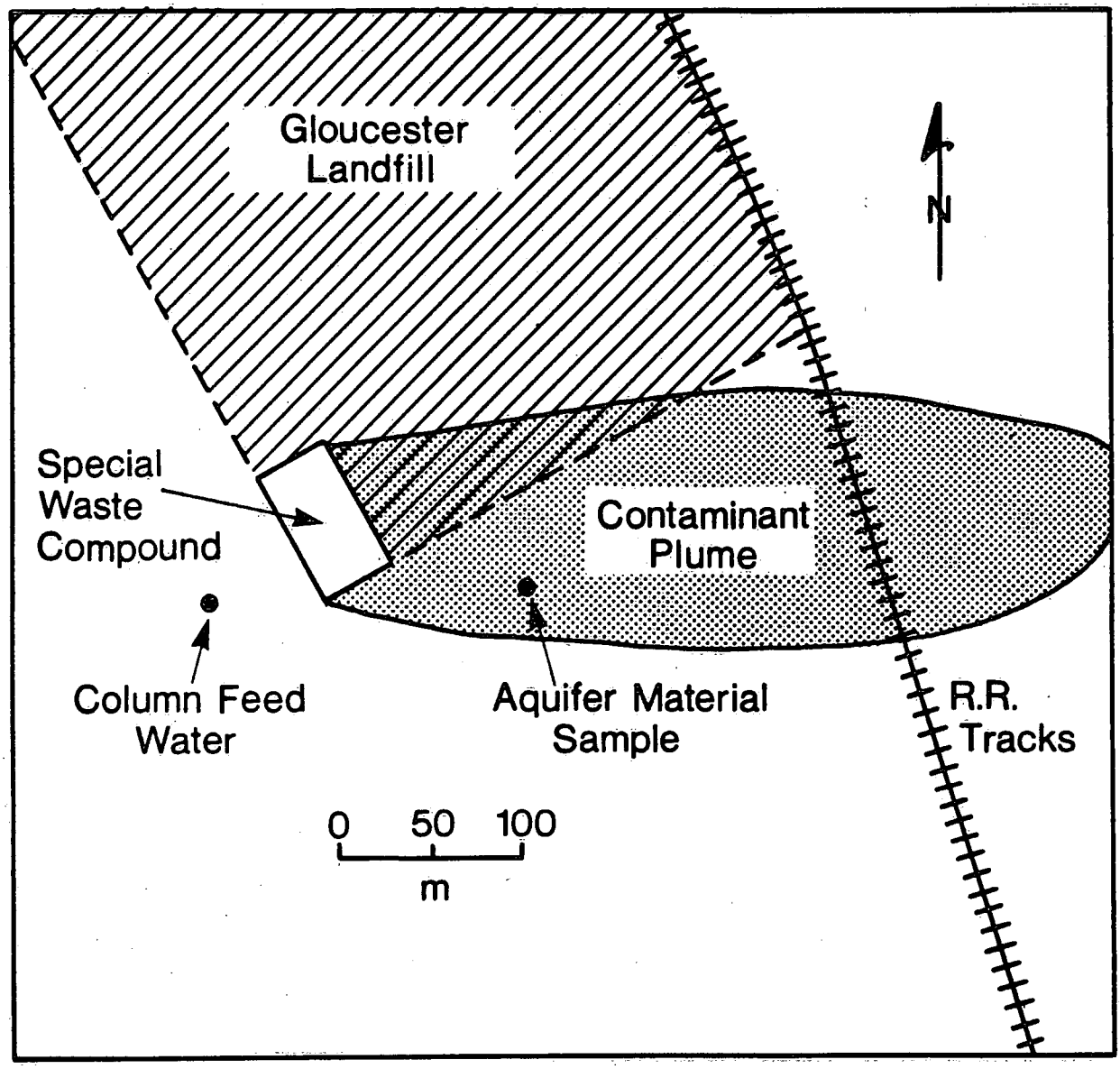
Gloucester
Landfill
N
Special
Waste
Compound
Contaminant
Plume
Column Feed
Water
Aquifer Material
Sample
R.R.
Tracks
0 50 100
m

FIGURE 2

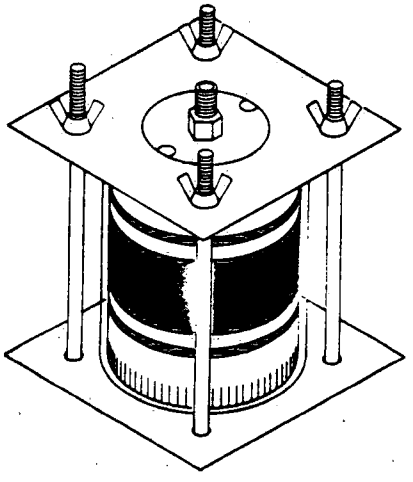

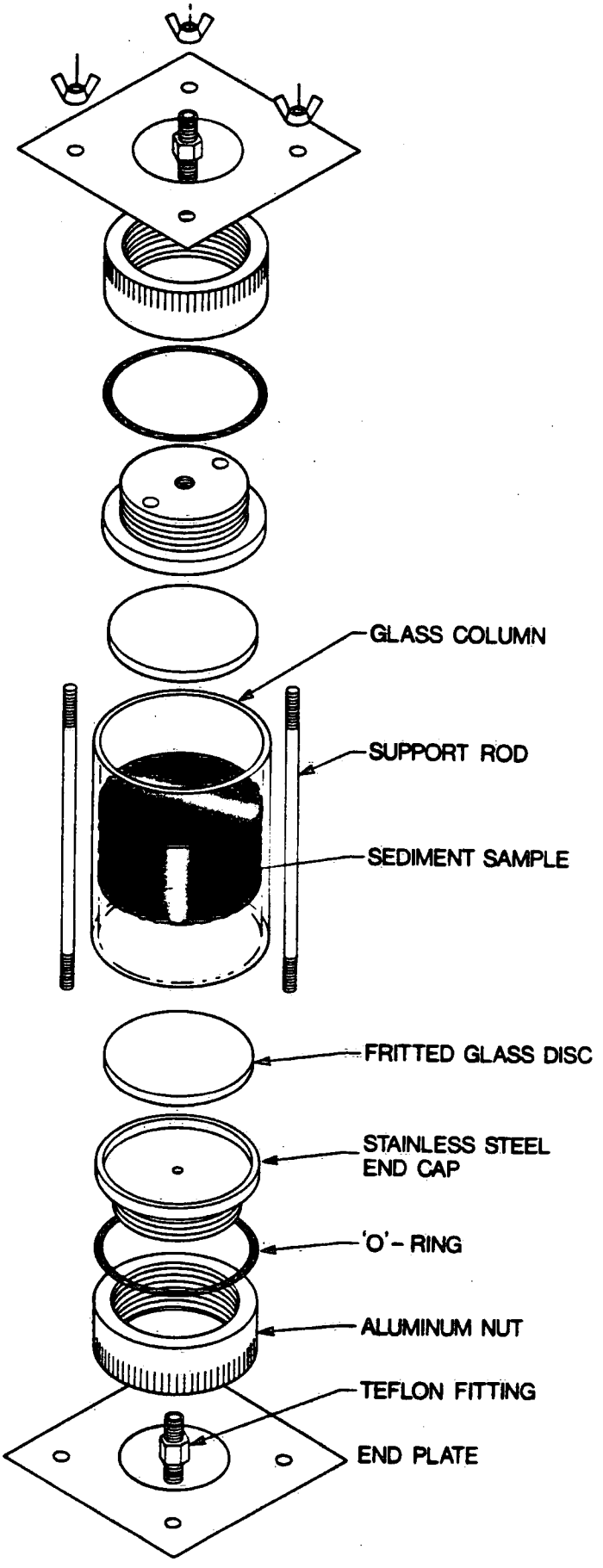
GLASS COLUMN
SUPPORT ROD
SEDIMENT SAMPLE
FRITTED GLASS DISC
STAINLESS STEEL
END CAP
'O'- RING
ALUMINUM NUT
TEFLON FITTING
END PLATE

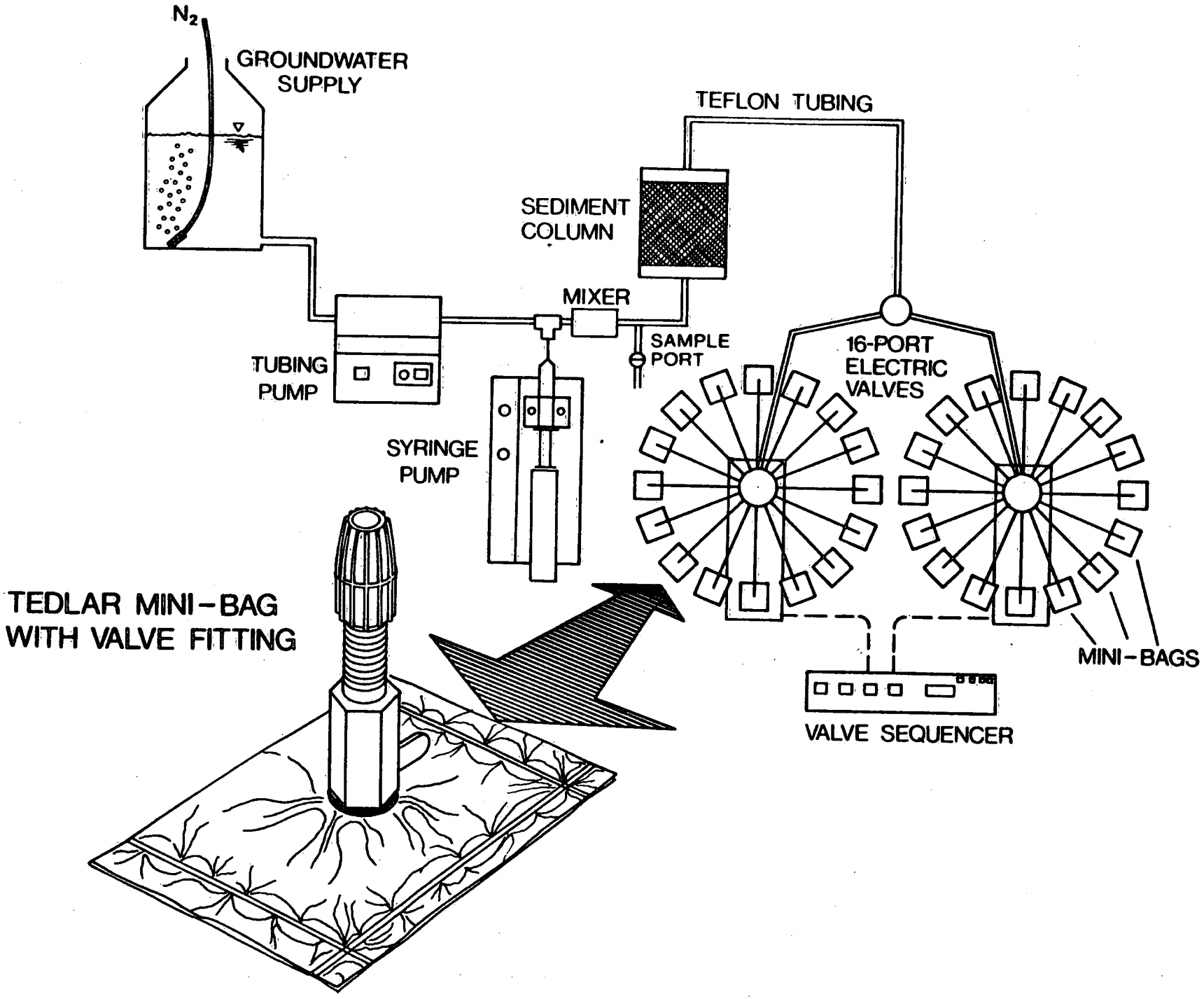
N_2
GROUNDWATER SUPPLY
TEFLON TUBING
SEDIMENT COLUMN
MIXER
SAMPLE PORT
TUBING PUMP
SYRINGE PUMP
16-PORT ELECTRIC VALVES
TEDLAR MINI-BAG WITH VALVE FITTING
MINI-BAGS
VALVE SEQUENCER

FIGURE 3

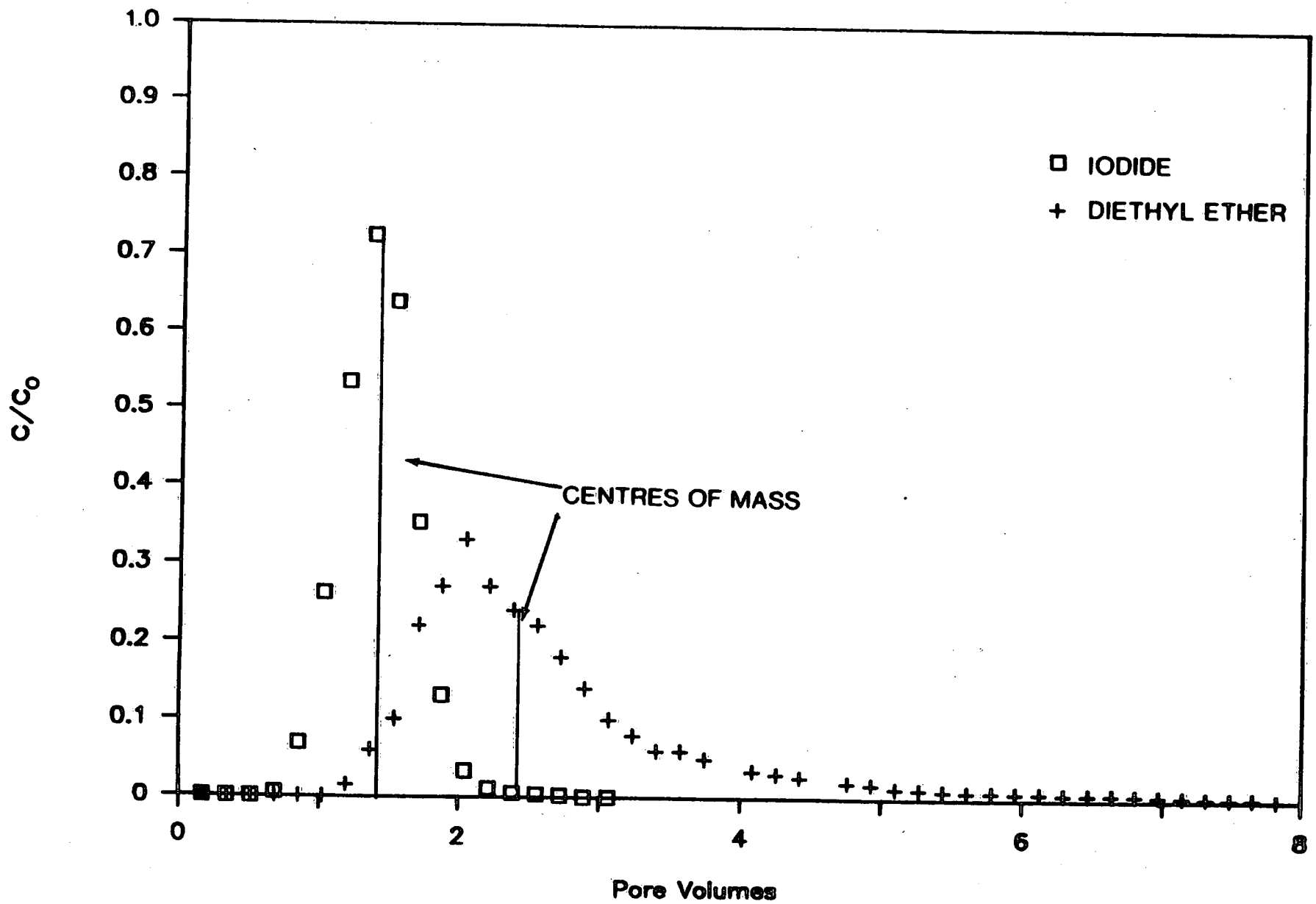
1.0
0.9
0.8
0.7
0.6
0.5
0.4
0.3
0.2
0.1
0
C/Co
0
2
4
6
8
Pore Volumes
IODIDE
DIETHYL ETHER
CENTRES OF MASS

FIGURE 4

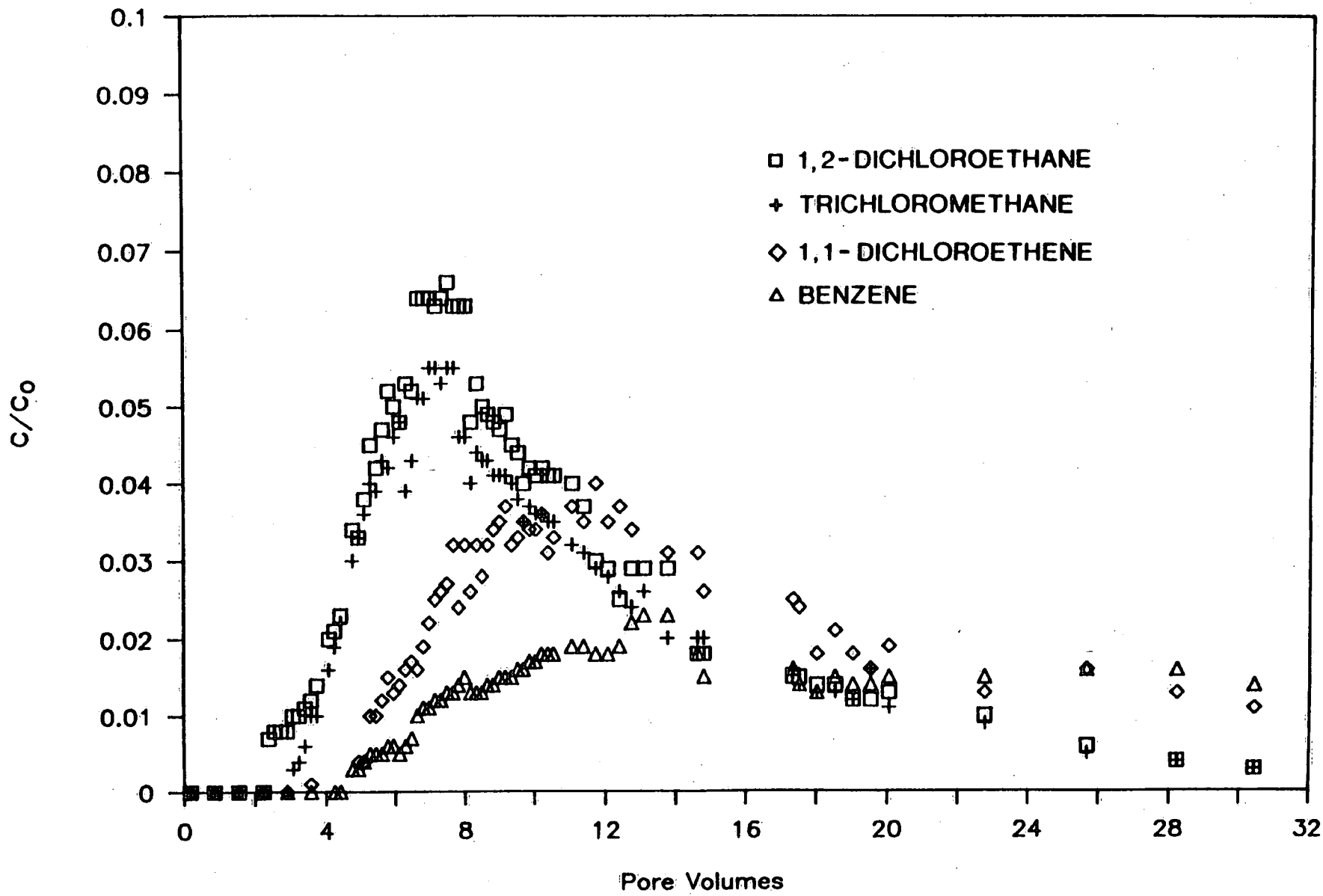
0.1
0.09
0.08
0.07
0.06
0.05
0.04
0.03
0.02
0.01
0
C/Co
0
4
8
12
16
20
24
28
32
Pore Volumes
1,2-DICHLOROETHANE
TRICHLOROMETHANE
1,1-DICHLOROETHENE
BENZENE

FIGURE 5

BIOGRAPHICAL SKETCHES

Mark Priddle is a ground water chemist with the Ground Water Contamination Project of the National Water Research Institute of Canada (P.O. Box 5050, Burlington, Ontario, L7R 4A6, Canada). He received a B.Sc. in Chemistry from the University of Waterloo in 1985.

Richard Jackson was formerly the Chief of the GroundWater Contamination Project at the National Water Research Institute of Canada and is now Manager of Chemical Hydrogeology at Intera Inc., (6850 Austin Center Blvd., Suite 300, Austin, TX 78731). He received a Ph.D. in contaminant hydrogeology from the University of Waterloo in 1979 and a B.S. in hydrology from the University of Arizona in 1969.