NWRI CONTRIBUTION 89-83

AUTOMATED METHOD FOR THE DETERMINATION OF BORON IN WATER

by

I. Sekerka and J.F. Lechner

Research and Applications Branch
National Water Research Institute
867 Lakeshore Road, P.O. Box 5050
Burlington, Ontario L7R 4A6

December 1988

MANAGEMENT PERSPECTIVE

Boron is one of the common parameters in the characterization and monitoring of water quality. Small amounts (μg/L) are present in most natural waters and increasing amounts are introduced by industrial and domestic wastes. Boron in the form of borates is an important component of aqueous acid and base neutralizing capacity (alkalinity and acidity). Reliable data of boron content in water are of great importance for acid rain problem studies and management. The method described in this report has been developed at the request of the National Water Quality Laboratory and fulfils the requirements of automation, sensitivity and reproducibility.

Dr. J. Lawrence
Director
Research and Applications Branch

PERSPECTIVE-GESTION

Le bore est une des substances couramment mesurées dans la caractérisation et le contrôle de la qualité de l'eau. Il est présent en faible concentration (de l'ordre du ug/L) dans la plupart des sources d'eau naturelle, mais sa concentration augmente par suite de la contamination par des déchets industriels et domestiques. Le bore, sous forme de borates, est un facteur important de la capacité de neutralisation des acides et des bases en milieu aqueux (alcalinité et acidité). Il est tres important d'obtenir des données fiables lorsqu'on mesure la concentration de bore dans l'eau dans l'etude et la gestion des problèmes engendrés par les pluies acides. La méthode décrite dans le present rapport a été mise au point à la demande du Laboratoire national de la qualite de l'eau et satisfait aux exigences concernant l'automatisation, la sensibilité et la reproductibilité.

Dr. J. Lawrence

Directeur

Direction générale de la recherche et des applications

ABSTRACT

A sensitive, automated method for the determination of boron in water samples is described. It employs flow-injection with on-line ion exchange preconcentration and colorimetric detection of the azomethene-H boron complex. The method is applicable to various water samples and is interference free, even in coloured samples. Detection limits of 5 μg/L at 20 samples/h and 1 μg/L at 10 samples/h with relative standard deviation of <10% at 1-10 μg/L and <5% at 10-200 μg/L levels of boron, were achieved. The recoveries of spiked natural water samples ranged from 96 to 101%. Described methods compare favourably with inductively coupled plasma spectrometric technique.

RÉSUMÉ

On décrit une méthode automatisée sensible pour doser le bore dans des échantillons d'eau. Cette méthode fait appel à une technique d'échange d'ions en direct (flow-injection with on-line ion exchange preconcentration) avec détection colorimétrique du complexe bore-azomethene-H. La methode est applicable à divers échantillons d'eau et ne donne pas d'interférence, même en présence d'echantillons colorés. La limite de détection est de 5 ug/L à un rythme de 20 échantillons l'heure et de 1 ug/L à un rythme de 10 échantillons l'heure, avec des écarts types relatifs de <10% à des concentrations de bore de 1-10 ug/L et de <5% à des concentrations de 10-200 ug/L. Nous avons obtenu des récupérations de 96 à 101% dans des échantillons d'eau naturelle enrichis. La méthode décrite se compare avantageusement à la technique spectrometrique a plasma à couplage inductif.

1.0 INTRODUCTION

Boron is one of the parameters of interest in the program of monitoring water quality. Although small amounts of boron are found in most waters across Canada, increasing amounts are introduced by industrial and domestic wastes.

A variety of analytical procedures for the determination of boron in water have been developed. Several colorimetric methods utilizing curcumin (12-14), carminic acid (15), methylene blue (16), 1,1-dianthrimide (17), beta-diketones (18), 2,6 dihydroxybenzoic acid (19), chromatophic acid (20), "brilliant green" (21), DHBA -crystal violet (22) and azomethine-H (1-5) have been reported. Fluorometric procedures, which are more sensitive, have also been reported (23). At present only a few adequately sensitive methods for boron (14, 24, 29) exist and to our knowledge only one (24) has been automated. Only these methods appear to be capable of measuring boron at the low levels required for monitoring Canadian waters.

To improve the sensitivity of the methods for boron a preconcentration step of solvent extraction has been recommended (14). The detection limit has been lowered down to 1 μg/L. However, for the majority of these methods adaptation to automated procedures is not readily feasible, they are time-consuming due to slow colour development, require evaporation to dryness, or concentrated acid medium and extraction prior to colour reaction and detection. An automated method by Afghan et al. (24) is adequately sensitive, but uses concentrated H_2SO_4 and UV irradiation to eliminate background fluorescence of native organic compounds in the sample. DC-Arc Argon Plasma Emission Spectroscopic and Inductively Coupled Plasma Atomic Emission Spectrometric techniques (27-29), have low detection limits ((1μg/L), however, the instrumentation is expensive and dedicating such instrumentation to boron analysis only, is economically not feasible. The colorimetric method using azomethine-H boron complex has been selected for its simplicity, sensitivity and speed. The procedure does

not involve concentrated acid which makes it suitable for automated routine operation. The authors claim a detection limit of 10 μg/L of boron at optimal conditions. Our requirement was at least 1 μg/L. In order to increase the sensitivity of the method, a preconcentration step had to be incorporated. The preconcentration employing an on-line ion-exchanger column in conjunction with a flow injection system, has been described by Greenfield (30) and Olson (31) for heavy metals in sea water. Similar preconcentration procedures were used by Hartenstein (9,10) for atomic adsorption spectroscopic determination and by Fang et al. (11, 32).

2.0 EXPERIMENTAL

2.1 Instrumentation

The instrumental configuration included a Lachat peristaltic pump, Model 1000-200, a Lachat multi-channel colorimeter, Model 100-300, a pneumatic Reodyne 6-port injection valve, Model 7000L, a pneumatic Reodyne three-way slider valve, Model 5302, a Radiometer Model SAC-80 Sample changer, capable of accommodating large volume samples (60 to 120 ml), a Xanadu Universal Timer, Philips PM 8252-A recorder and a Labtronics DP1000 data acquisition system. A block diagram of the assembly is given in Fig. 1.

2.2 Ion-Exchanger Column

The design of the ion-exchanging column was dictated by the requirement of high efficiency of boron accumulation and fast elution by a minimal volume of eluant. The changes of resin volume (swelling and shrinking during the process) were also important factors for the design. The details of the construction are given in Fig. 2. The cartridge contained 8-10 mg of dry Amberlite IRA-743 ion-exchange resin. The resin is based on N-metylglucamine and exhibits a specificity for boron. Under strong acidic conditions, the ability to sorb boron as

boric acid is decreased to the point where a strong acid can regenerate the resin and elute boron (7). The sorbing capacity of this cartridge is large enough to eliminate a breakthrough situation.

Initially, the application of Amberlite IRA-743 was thought to be complicated by the need for a caustic regeneration step (8) immediately following acid elution. This step was found to be unnecessary. We also found that 1 M Phosphoric acid as the eluant was equally as efficient as 10% v/v H_2SO_4 or HCL. This also eliminates technical problems arising from the corrosive attack of strong acids on the steel valves. Furthermore, the recommended ammonium acetate buffer system has been replaced by an ammonium phosphate buffer system. The manifold, containing reaction and delay coils as well as colorimetric flowthrough cell, were kept at the constant temperature of 25±0.2°C.

2.3 Reagents

All reagents were of analytical grade and were prepared in distilled deionized water. All solutions, including samples and standards, were filtered and stored in polyethylene bottles.

1. Azomethine-H reagent (obtained from Pierce Chemical Co.), was prepared by dissolving 4.0 g of ascorbic acid in 200 ml dionized water, followed by the addition of 1.8 g azomethine-H sodium salt. This reagent must be filtered. The azomethine-H reagent is useful for about two to three weeks if refrigerated. Otherwise the reagent should be prepared daily. For stability reasons during analysis, this reagent must be protected from light and kept cold.
2. Ammonium Phosphate 2.0 M buffers were prepared by dissolving 230.06 g of $NH_4H_2PO_4$ in 1 L deionized water, 2.0 g/L of EDTA-Disodium salt was added to B1, the sample buffer, 20,0 g/L of EDTA - disodium salt was added to B2, the reaction buffer. The pH of both buffers (B1 and B2) was adjusted to 6.6 by careful addition of ammonia solution. Both buffers (B1 and B2) were treated by

passing through a resin of Amberlite IRA-743 prior to use. The addition of EDTA prevents eventual interferences by metal ions.

3. Phosphoric acid, 1.0 M solution was prepared by dilution of 69.0 ml concentrated H_3PO_4 to 1.0 L with deionized water.
4. Stock Boron Solution (100 mg/L as boron) was prepared by dissolving 0.5716 g of anhydrous boric acid (H_3BO_3) in 1.0 L of deionized water.
5. Working Boron Solution - a series of calibration standards, containing 0.05, 0.010, 0.25, 0.050, 0.100, and 0.200 mg/L boron were prepared by appropriate dilution of the stock boron solution. Samples and standards should not differ in pH to a great extent. If samples were preserved in acid (usually 2.0 ml/L conc. HNO_3), then standards should contain the same.

3.0 PROCEDURE

The flow injection system and manifold consisting of the six-port valve V_1, the ion-exchange column, three-way valve V_2 and delay coils C_1 and C_2, are shown in Figure 3A and 3B.

3.1 Accumulation Cycle (see Fig. 3A)

The sample stream, which is continuously mixed with buffer B_1 (pH 6.6) passes through the cartrige, where boron is accumulated on the resin. At the same time, phosphoric acid (A) is mixed with reaction buffer B_2 (pH 6.6), neutralized and mixed with azomethine-H reagent, and diverted into the bypass coil C_2 via valve V_2 towards the colorimetric detector. The detector signal is monitored at 420 nm.

3.2 Elution Cycle (see Figure 3B)

The moment valve V_1 switches to the elution cycle, the flow of sample is diverted to waste. The stream of acid (A) enters the

ion-exchange cartrige, elutes the boron from the resin and continues downstream into the manifold. After pH adjustment with buffer B_2 and mixing with azomethine reagent, valve V_2 diverts the segment, containing boron, into the reactions coil C_1 where it remains "parked" throughout the following accumulation cycle to allow colour formation to proceed. As the next sample segment arrives, the previous sample is pushed downstream into the detector. This arrangement also allows for a constant flow of "background" solutions through the detectors, assuring stable and reproducible "baseline" signal. A timing diagram of both valves (V_1 and V_2) for 180 and 360 second cycles is shown in Fig. 4. These cycles alternate according to preselected periods of time. For low levels of boron (<10 ppb) a 6-min cycle is recommended and for levels above 10 ppb, 3-min cycle is sufficient.

3.3 Procedural Instruction

To start a run, the reagents are fed through the system, using deionized water in the sample line. Allow at least 30 minutes for instrument warmup and stabilization. Using the highest standard, check if the analog input voltage from the detector matches the input voltage setting range of the interface board of the DP1000. Then set the recorder range to 90% fullscale deflection. Once stability is reached, adjust the lowest deflection of the detector output to near zero. Start analysis by activating the data logging feature of the DP1000. Use three blanks in the first position of the tray, followed by a complete set of standards plus one reference standard in the middle range for drift correction. Insert three blanks immediately after the standards, followed by the sample cups. Randomly, insert a reference standard and a blank among the sample cups. End the run with a reference standard and three blanks. When analysis is complete, save the raw data to disk.

Rinse all lines of the system by running deionized water through for 15 minutes. All containers used, including sampler tray cups should be plastic to avoid potential contamination.

With the raw data in the memory, complete calibration, calculation, editing and printing of the results is managed by the DP1000, according to its instruction manual (33). The assignments of the tubing for the peristaltic pump and corresponding flow rates of individual channels are summarized in Table 1. Delay coils C_1 and C_2 are made up of 0.8 mm I.D. teflon tubing with a pathlength of 450 cm. Total path length of the systems, including mixing coil C_3 is about 600 cm from valve V_1 to the detector.

4.0 RESULTS AND DISCUSSION

Initially, a problem was encountered with the Azomethine-H method due to its inherent pH-color sensitivity. This became apparent when it was linked with the "on-line" boron preconcentration technique, which includes an acid elution step. We found that strict pH control is necessary during the course of the measurement in order to maintain the color development reproducible and constant. Originally the method used ammonium acetate buffers. During the experiments, it was found that the phosphate buffering system has several advantages. It has high buffering capacity at required pH 6-7 range, it is not corrosive to metal valves and the preparation is simple without creating offensive fumes.

The system provides proportional mixing of the acid eluant and buffer in the manifold. During the switchover from "neutral" aqueous loading to "acid" elution, a plug of "transitional"less acid solution is inadvertantly drawn into the manifold, creating a pH related or "false" peak. Azomethine-H boron complex colour is highly pH sensitive, especially in the range of pH 6 to 7. In addition, there are other less significant factors that affect the refractive index of the solution in the cell. They occur, when differences in temperature, ionic strength and viscosity are present where the boundary segment of two solutions is passing through the cell. This situation occurs when the "transitional

plug" moves through the cell. From Figure 5, where typical elution profiles are superimposed for increasing concentrations it is clear that the response is more akin to a profile pattern in chromatography, than the customary, smooth FIA peak. Therefore, it must be realized, that the boron peak is always superimposed on this baseline "profile" pattern.

The automated method was evaluated by analyzing both artificial reference and natural water samples and by comparing the results with Inductively Coupled Plasma Atomic Emission Spectrometric (ICP) method, currently used by the National Water Quality Laboratory. The results are given in Table 2. Typical standard curve is shown in Figure 6. Figure 7 is an example of a typical DP1000 scan, showing the response to standards and natural water samples. The values of the standard deviation (SD), based on multiple determinations, are given in Tables 3 and 4. The recovery of boron was tested by addition of boric acid (H_3BO_3) to natural water samples,. The recoveries were around 3% (see Table 5). Interference studies were conducted to determine potential interference by other dissolved species at concentrations normally exceeding natural levels. Cations tested were aluminum, calcium, magnesium, iron, copper, manganese, sodium and potassium. The anions tested were fluoride, nitrate, bicarbonate, sulfate, chloride and phosphate. The use of EDTA combined with the relative selectivity of the boron specific resin, results in an interference-free boron method. Table 6 shows the results of the interference test.

Application of on-line preconcentration allows the detection limit to become a variable parameter. A longer accumulation time produces higher peaks and increases the sensitivity of the method, whereas a shorter accumulation time is suitable for samples with high content of boron. The operator has the choice of balancing the needs of sensitivity and time efficiency in respect to numbers of samples and expected levels of boron.

The linear relationship of the peak-height of azomethine boron complex versus the accumulation time is given in Fig. 8.

5.0 CONCLUSIONS

The automated method for boron described here is among the most sensitive boron methods available today. Because it is convenient, and interference-free and no sample pre-treatment is required, the method is suitable for analysis of water samples on a routine basis.

ACKNOWLEDGEMENTS

The authors thank Mr. O. El Kei and Mr. K. Austen of the National Water Quality Laboratory, Burlington, Ontario, for their cooperation.

REFERENCES

1. F.J. Krug, J. Mortatti, L.C.R. Pressenda, E.A.G. Zagatto and H. Bergamin - Anal. Chim. Acta 125 (1981), 29.
2. R.R. Spencer, E. Erdmann - Environmetnal Science and Technology, 13, (1979), 954.
3. P.E. Trujillo, E. Gladney, D.A. Counce, E.J. Mroz, D.R. Perrin, J.W. Owens and L.E. Wangen, - Anal. Letters, 15(A7), (1982), 643.
4. W.D. Basson, R.G. Bohmer, D.A. Stanton, - Analyst, 94, (1969), 1135.
5. W.D. Basson, P.P. Pille, A.L. Du Preez, - Analyst, 99, (1974), 168.
6. R.M. Carlson, J.L. Paul, - Anal. Chem. 40, (1968), 1292.
7. R. Kunin, A.F. Preuss, - I & EC Product Research and Development, 3, (1964), 304.
8. Rohm and Haas Technical Bulletin, Amberlite IRA -743.
9. S.D. Hartenstein, G.D. Christian, J. Ruzicka, - Canadian J. of Specroscopy, 30, (1985), 144.
10. S.D. Hartenstein, J. Ruzicka, G.D. Christian, - Anal. Chem. 57, (1985), 21.
11. Z. Fang, S. Xu, S. Zhang, - Anal. Chim. Acta. 164, (1984), 41.
12. L. Uppstrom, - Anal. Chim. Acta, 43, (1968), 475.
13. P. Hulthe, L. Uppstrom, G. Ostling, - Anal. Chim. Acta, 51, (1970), 31.
14. U. de la Chevallerie - Haaf, A. Meyer, G. Henze, - Fresenius Z. Anal. Chem. 323, (1986), 266.
15. ASTM, 1974 Annual Book of ASTM Standards, Water Am. Soc. for Testing and Materials. Philadelphia, method D3082 - 72T, pp. 253 (1974).
16. P. Lanza and P.L. Buldini, - Anal. Chim. Acta, 70 (1974), 341.
17. H.K.L. Gupta, D.F. Boltz, - Anal. Letters, 4, (1971), 161.
18. J.L. Lambert, J.V. Pankstelis, R.A. Bruckdorfer, - Anal. Chem. 50 (1978), 820.
19. M. Oshima, K. Fujimoto, K. Toei, - Anal. Chim. Acta, 134, (1982), 73.

20. T. Korenaga, S. Motomiga, K. Toei, - Analyst, 110, (1978), 745.
21. K. Kumada, S. Motomuzu, K. Toei, - Anal. Chem. 50, (1978), 1788.
22. I.L. Garcia, M.H. Cordoba, C. Sanchez-Pedreno, - Analyst, 110, (1985), 1259.
23. C.E. White, D.E. Hoffman, - Anal. Chem. 29, (1957), 1105.
24. B.K. AFghan, P.D. Goulden, J.F. Ryan, - Water Res. 6, (1972), 1475.
25. F.D. Pierce, H.R. Brown, - Anal. Chem. 48, (1976), 670.
26. E.H. Daughtrey, W.W. Harrison, - Anal. Chim. Acta 67, (1973), 253.
27. J.W. Bell, J.M. Tompson, E.A. Jenne, - Anal. Chim. Acta 98 (1978), 67.
28. I.T. Urasa, - Anal. Chem. 56 (1984), 904.
29. R.K. Winge, V.J. Peterson, V.A. Fassel. - Appl. Spectroscopy 33, (1979), 206.
30. S. Greenfield, - Spectrochim. Acta 38b, (1983), 93.
31. S. Olson, L.C.R. Pessenda, J. Ruzicka, E.H. Hansen, - Analyst 108, (1986), 905.
32. Z. Fang, S. Xu, X. Wang, S. Zhang, - Anal. Chim. Acta 179, (1986), 325.
33. DP 1000, Labtronics Instruction Manual 1988.

TABLE 1

Tubing Assignments and Flow Rates

A	Orthophosphoric Acid (1M)	1 x grn/blu	1.9-2.2 mL/min
S	Sample	2 x wht/pur	8.0-10.0 mL/min
B1	Ammonium Phosphate (2M) (pH 6.6, 20 g/L ETDA)	1 x red/wht	0.8-0.9 mL/min
B2	Ammonium Phosphate (2M) (pH 6.6, 2 g/L ETDA)	2 x blu/blu	3.5-4.0 mL/min
R	Azomethine H (0.002 M) (L-Ascorbic Acid 2g/100 mL)	1 x wht/wht	0.7-0.8 mL/min
Return Flow from Detector		1 x pur/pur 1 x blk/pur	5.5-6.0 mL/min

TABLE 2

Results Obtained by Comparing Two Methods of Boron Analysis Determination

Samples	ICP* (µg/L)	FIA (µg/L)
STD (0)	2	0.0
STD (10)	11	9.6
STD (100)	96	103.6
B. Bay	67	65.4
B. Bay + SPK (25 ppb B)	86	91.9
Hidden Valley Creek	54	52.4
Roseland Creek	29	30.3
Shore Acres Creek	41	37.9
Appleby Creek	62	64.2
Western Region #8574	321	299.5
Western Region #8146	112	125.6
Western Region #8311	6	7.9
Western Region #8305	11	11.2
Western Region #8152	>2	11.6
Western Region #8304	2	2.8

* the samples were preconcentrated by a factor of 10 by evaporation

TABLE 3

Statistical Evaluation of Analysis for Boron in Standard and Natural Water Samples

Std's µg/L	Natural Samples	No. Det.	Mean µg/L	SD µg	RSD* %
200		10	199.93	1.04	0.5
100		10	99.98	1.57	1.6
50		10	49.97	0.98	2.0
25		10	24.23	0.80	3.3
10		10	9.39	0.57	6.0
5		10	5.89	0.72	12.2
	Tap I	10	25.50	0.82	3.2
	Tap II	9	25.34	0.82	3.2
	Lake O.	8	32.35	1.17	3.3
	Bay I	10	71.89	0.35	0.5
	Bay II	11	63.01	1.92	3.1
	Tap + SPK (50)	28	74.45	1.13	1.5

* Results obtained by running system at 20 samples/h

Std's µg/L	No. Det.	Mean µg/L	SD µg	RSD** %
100	20	99.01	0.87	0.9
10	7	9.7	0.30	3.3
5	7	5.07	0.22	4.5
2	7	2.00	0.20	10.0

** Results obtained by running system at 10 samples/h

TABLE 4

Recovery Test of Spiked Natural Samples

Sample	Present µg/L	Added µg/L	Total µg/L	Found µg/L	% Recovery
Tap I	23.8	25	48.8	46.9	96
Tap II	26.1	10	36.1	36.6	101
Ham. Bay	59.3	25	84.3	84.9	101
Lake Ont.	25.1	10	35.1	35.4	101
Western Region #2666	4.9	10	14.9	14.2	95
Western Region #8854	4.5	10	14.5	14.0	96
Western Region #6610	5.2	10	15.2	15.1	99
Western Region #7232	1.2	10	11.2	10.9	97
Western Region #7571	167.7	50	217.7	220.0	101
Western Region #2238	125.7	50	175.7	176.4	100

TABLE 5

Interference Effects of Cations and Anions

Boron Present %	Ion Added mg/L	Boron Found* µgL	Recovery %
50	None	50.2	100
50	Mg (200)	49.8	100
50	Ca (500)	52.0	104
50	Fe (1)	49.3	99
50	Fe (2)	52.8	106
50	Al (20)	49.3	99
50	Mn (20)	53.0	106
50	Zn (2)	49.9	100
50	Na (2000)	48.5	97
50	K (200)	47.3	95
50	NO_3(1500)	51.9	104
50	Cl (2000)	47.2	94
50	SO_4(1000)	48.5	97
50	F (20)	52.0	104
50	PO_4(10)	49.8	100
50	HCO_3(250)	48.1	96

* All results are based on triplicate measurements

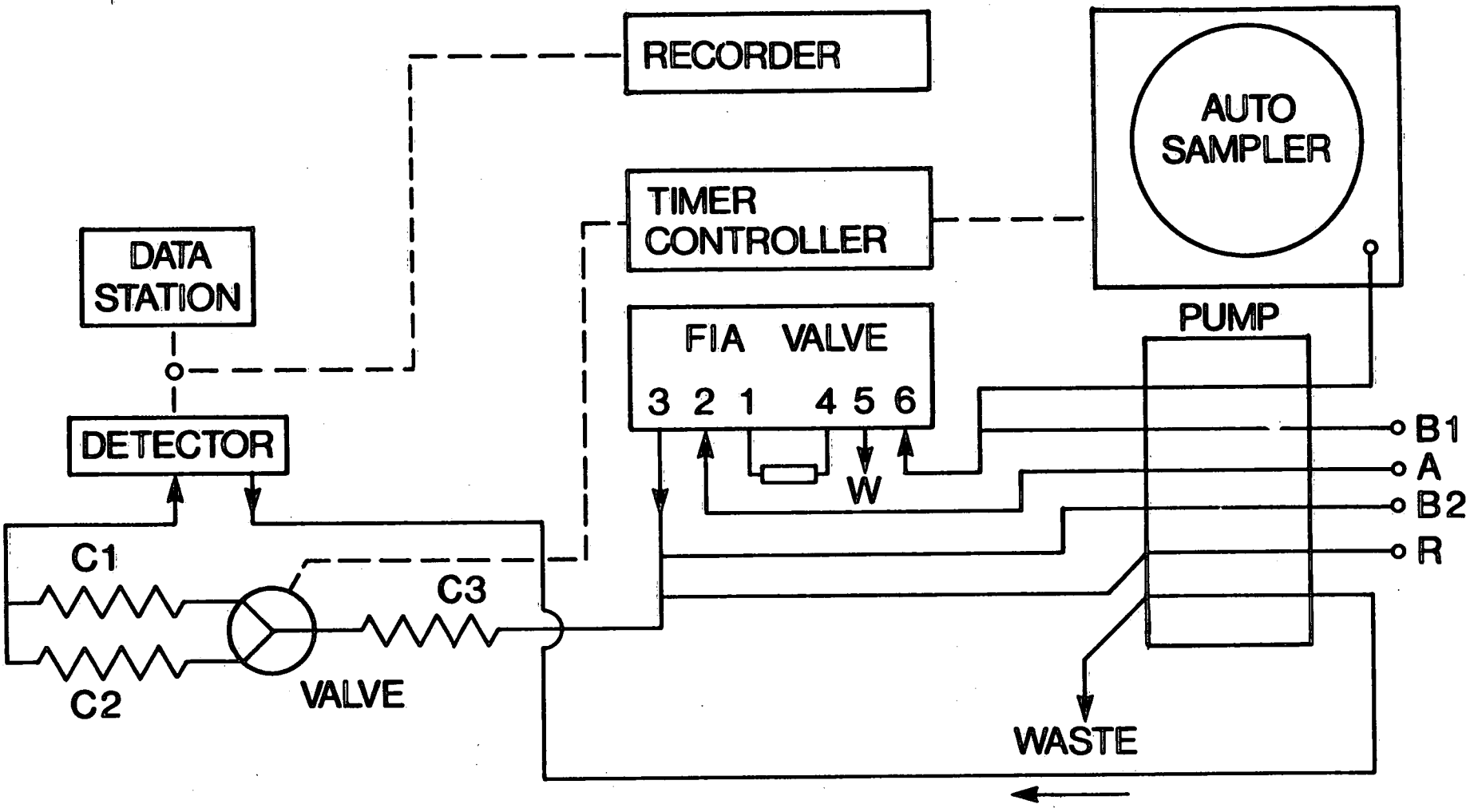

Figure 1. Block Diagram

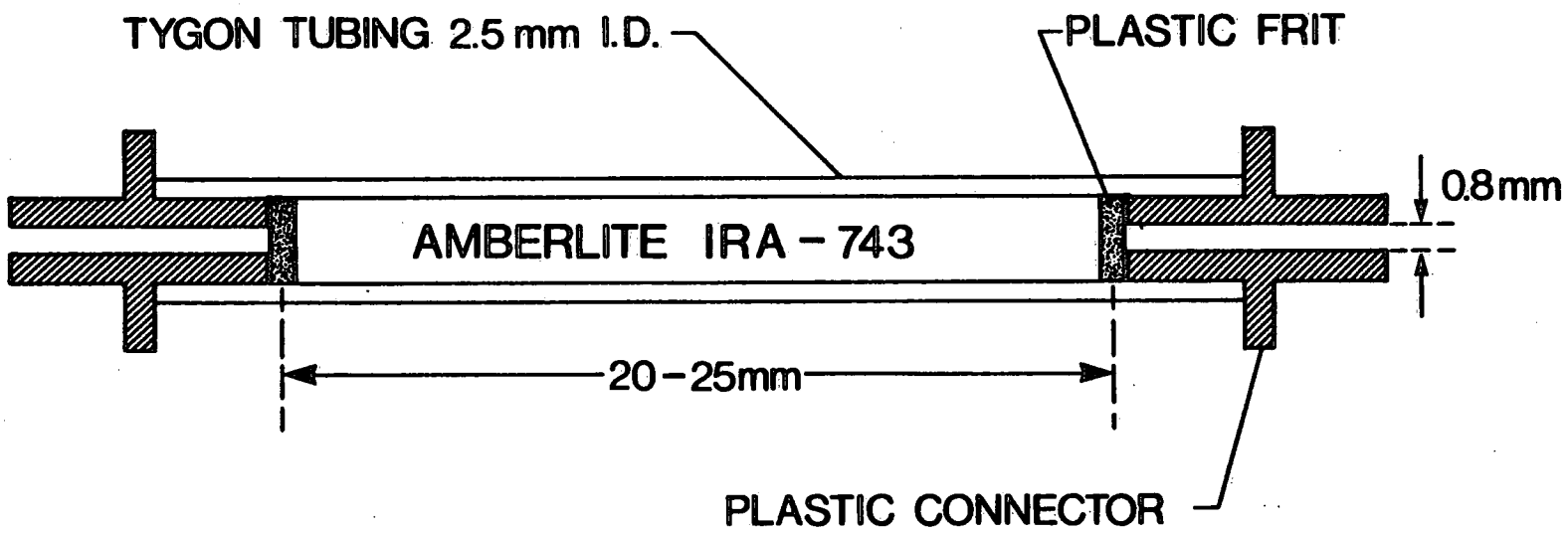

Figure 2. Ion-Exchange Column

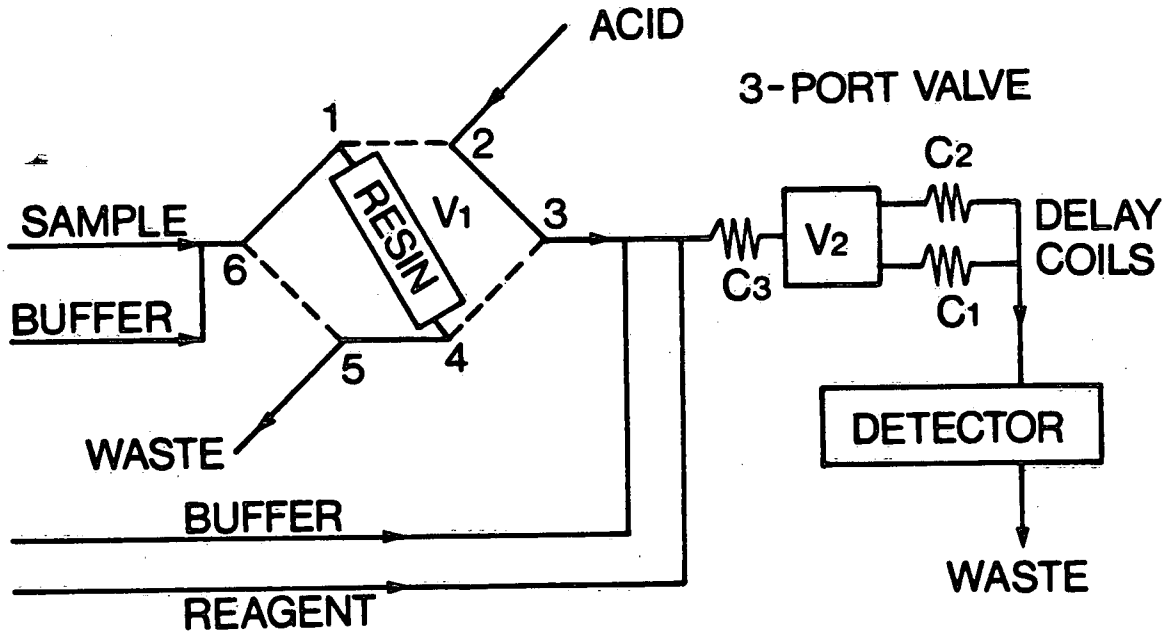

Figure 3a. Accumulation cycle

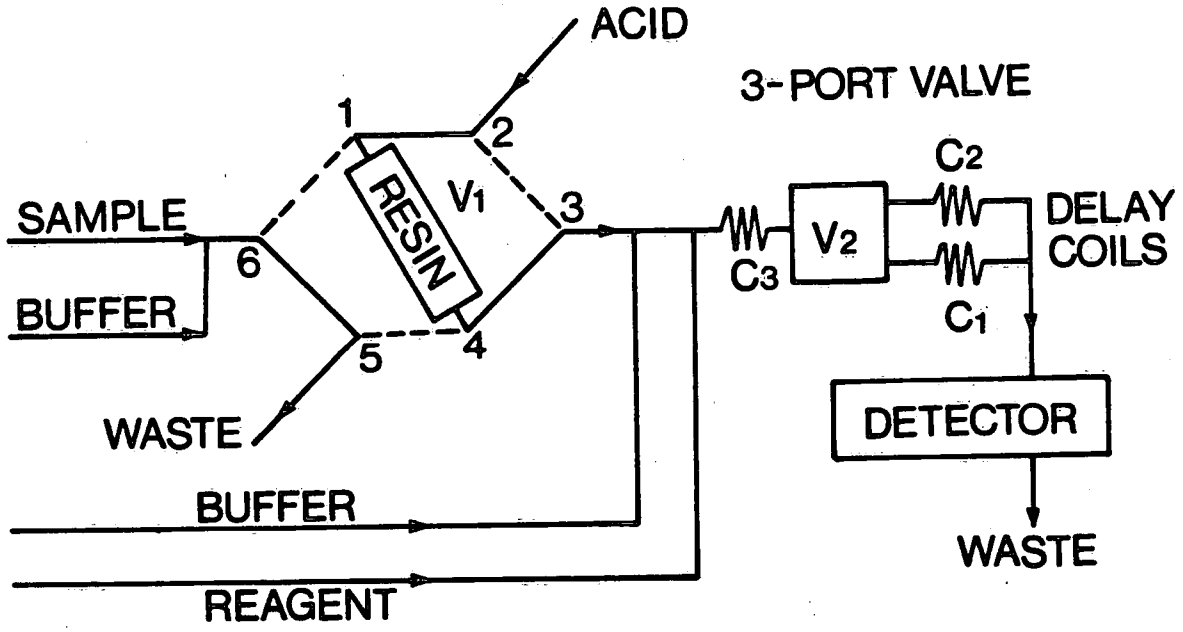

Figure 3b. Elution cycle

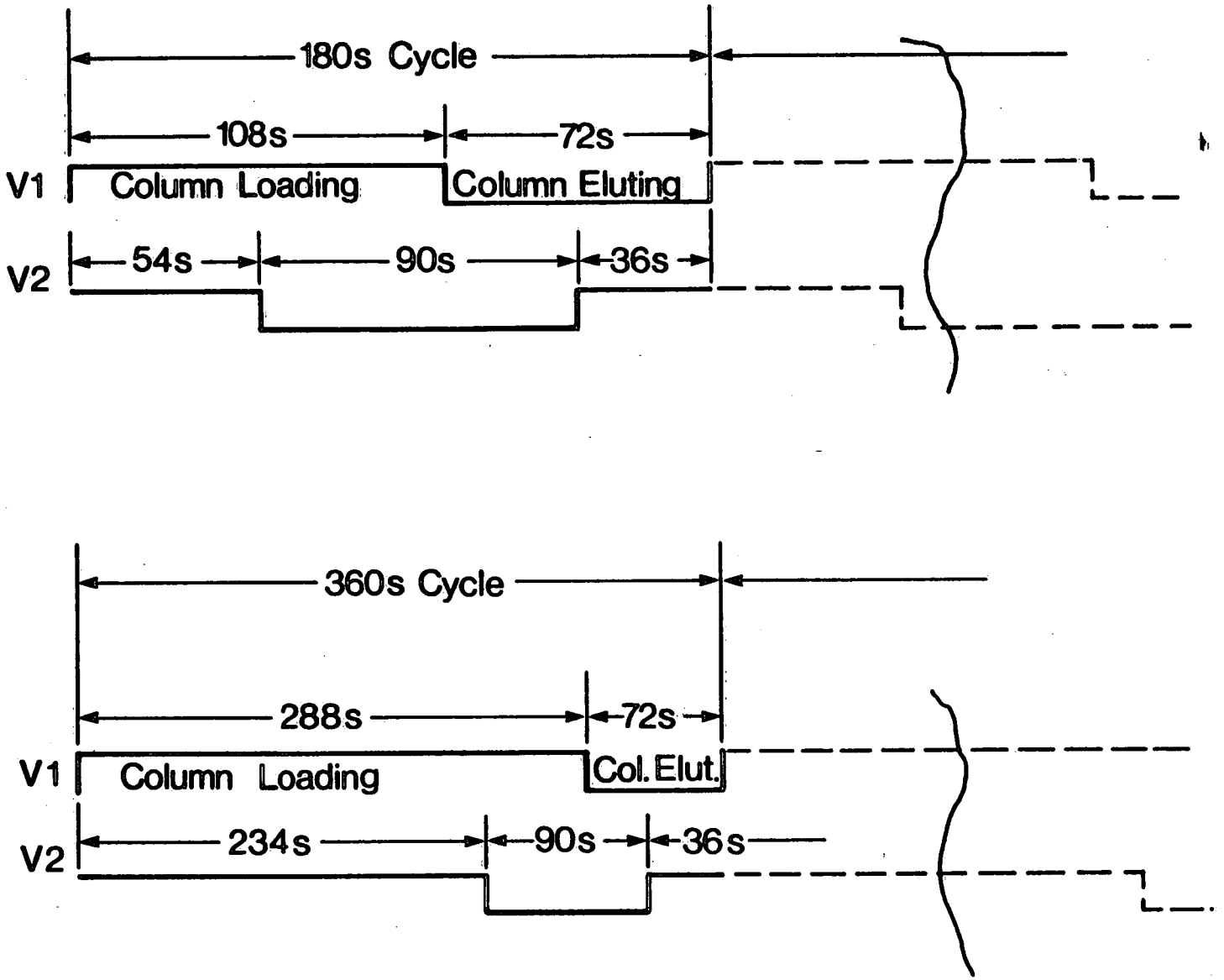

Figure 4. Valve Timing Diagram.

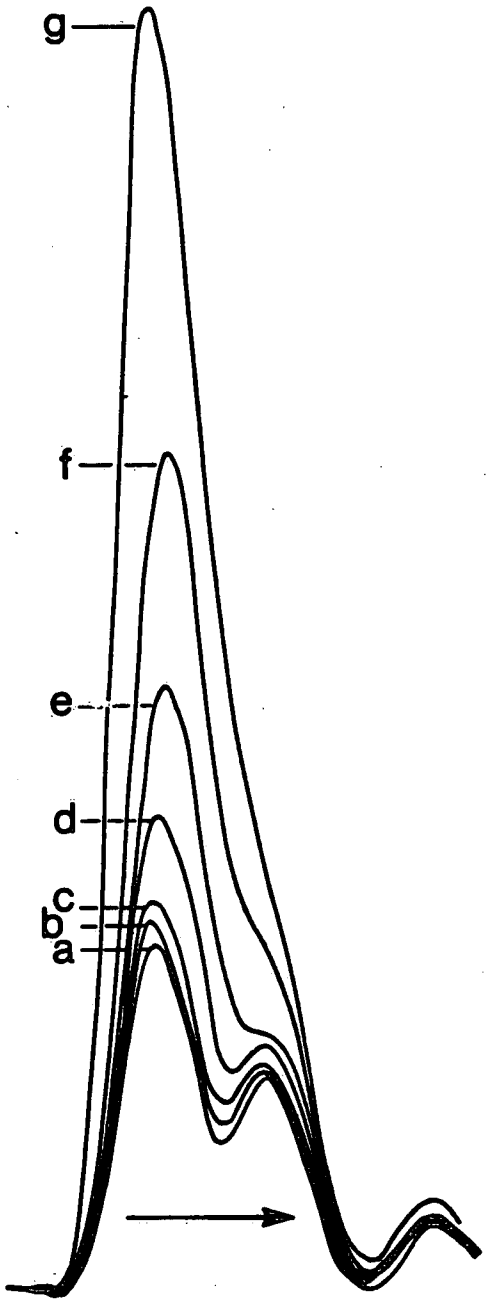

Figure 5. Superimposed elution patterns for increasing boron concentrations at a cycle time of 3 minutes. a=0, b=5, c=10, d=25, e=50, f=100, g=200 μg/L

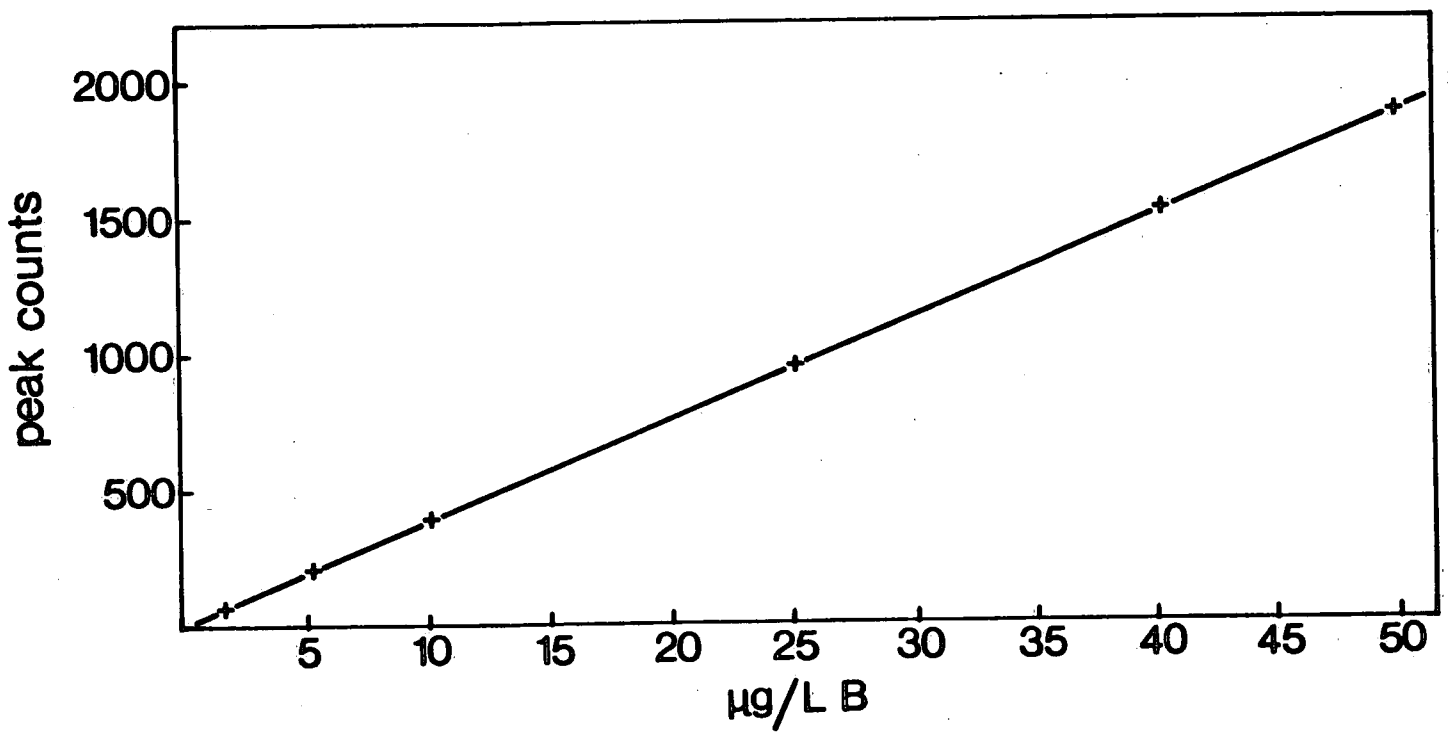

Figure 6. Typical plot of a standard curve.

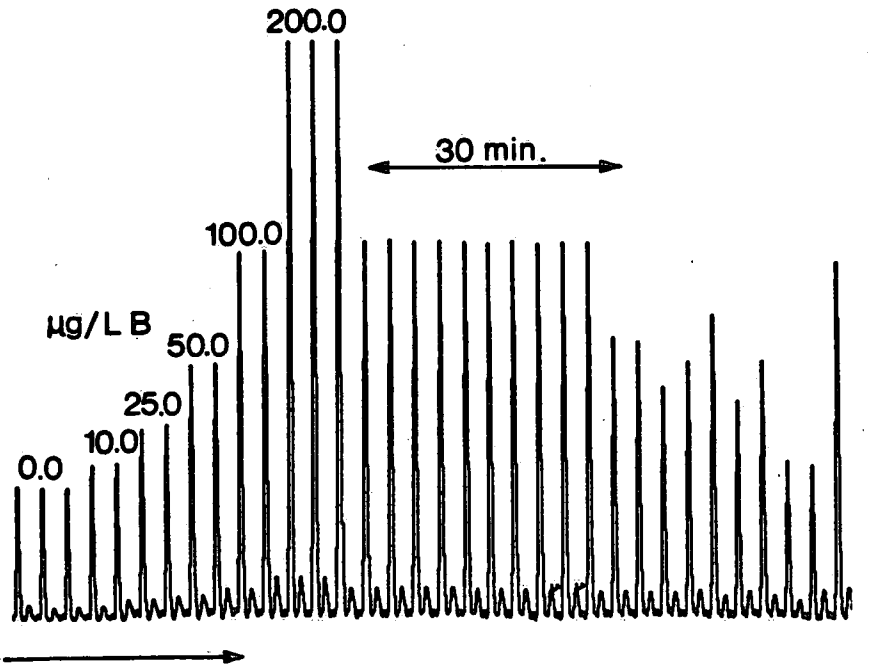

Figure 7. Strip-chart Record.

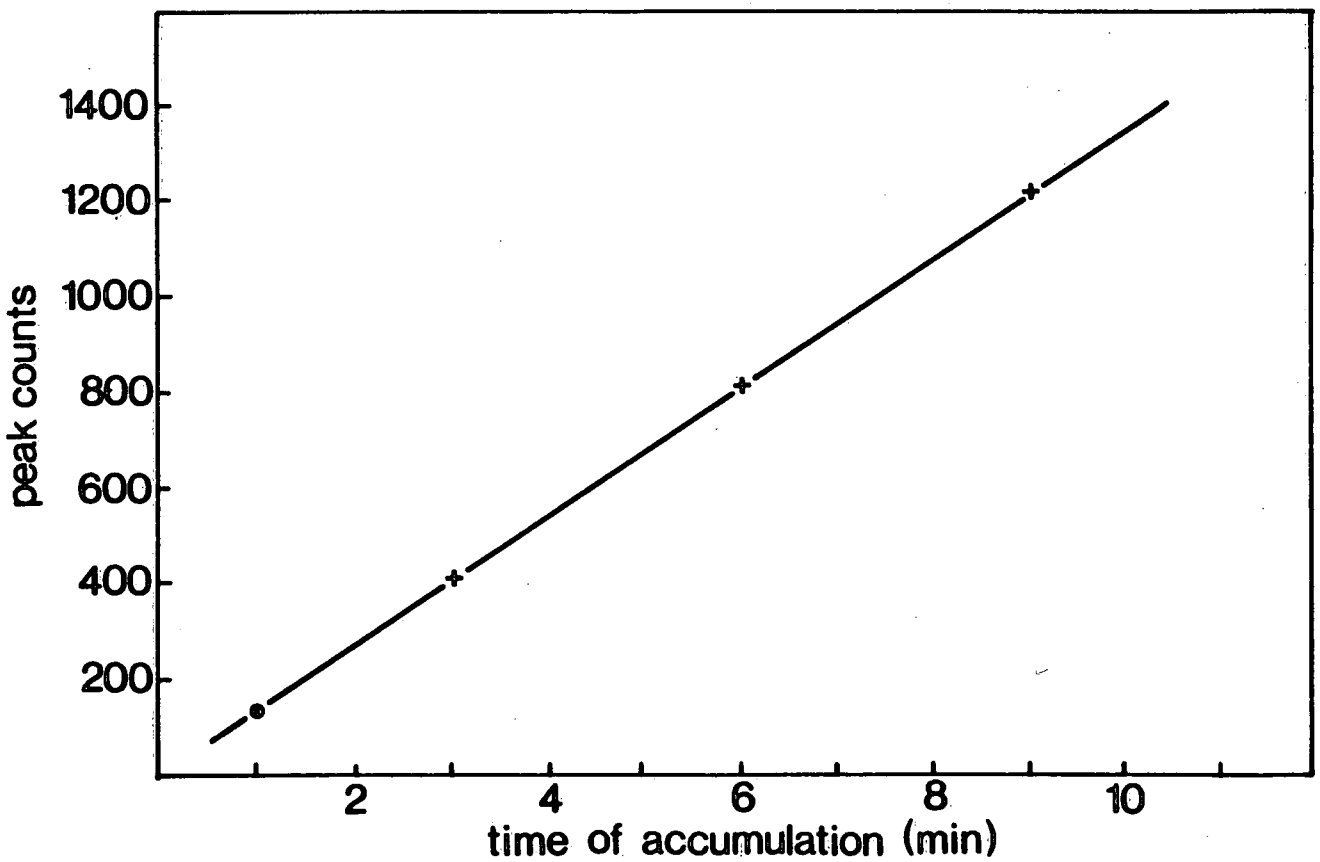

Figure 8. Relation of peak height to the accumulation time.