ENVIRONMENTAL PROTECTION
ENVIRONMENTAL EFFECTS MONITORING
FRESHWATER DIVISION
PACIFIC AND YUKON DIVISION

FIELD OPERATING PROCEDURES FOR ENVIRODATA LTD. SEDISAMP SYSTEM II CENTRIFUGE FOR THE MEASUREMENT OF DIOXIN AND FURAN IN SUSPENDED SEDIMENTS

Regional Program Report: 94-01

by

Gerry Mitchell

FEBRUARY 1994

ABSTRACT

Dioxins and furans discharged in pulp mill effluents into the Fraser River receiving environment are normally measured in samples from bed sediments. Environment Canada, Pacific and Yukon Region, has incorporated the use of an Envirodata Sedisamp System II Model 100 IL (modified Alfa-Laval MAB103B) continuous-flow centrifuge, to estimate the organochlorine levels in the suspended solids of secondary-treated pulp mill effluent and suspended river sediments. The National Water Research Institute of the Inland Waters Directorate of Environment Canada has used the centrifuge technique for the dewatering of suspended particulates in aquatic environmental application since the early 1970's. Environmental Protection, Pacific and Yukon, has adapted existing methods and information to develop an organochlorine sampling program for the Fraser River and associated bleached kraft pulp mills.

The Alfa-Laval Centrifuge was chosen over the Westfalia mainly for its portability and lower cost. The main drawback of the Alfa-Laval is the large number of sample bowl parts that require a time-consuming cleaning procedure between sampling runs.

TABLE OF CONTENTS

TABLE OF CONTENTS (CONT'D)

LIST OF FIGURES

LIST OF PLATES

LIST OF PLATES (CONT'D)

1.0 INTRODUCTION

Polychlorinated dibenzo-para-dioxin and dibenzofurans have been defined as "toxic" under sections 11(a) and 11(c) of the Canadian Environmental Protection Act (Government of Canada, 1990). Regulations under CEPA are being developed to control the release of chlorinated dioxins and furans in effluents from Canadian pulp and paper mills. The Province of B.C. has regulated the discharge of chlorinated organic compounds to 2.5 kilograms per ton of pulp product (Province of B.C., 1992). This reduction in chlorine use will lead to a reduction in the formation and subsequent discharge of dioxins and furans into the receiving environment. The continuous flow centrifuge procedures outlined herein were developed to enable Environment Canada to monitor the reduction of dioxins and furans in Fraser River pulp mill effluents and the associated Fraser River receiving environments.

Information for the procedures was obtained from Envirodata Ltd.; Canadian Centre for Inland Waters, Burlington, Ontario; Inland Waters Directorate, Pacific and Yukon Region; and Alfa-Laval Canada Ltd. Additional information was obtained through hands on practical experience. The procedures are intended to ensure quality control of the samples, as well as safe centrifuge operation.

Although these procedures are written specifically for the collection of suspended solids for chlorinated organics analysis, particle size and other sediment chemistry analysis (i.e., select metals) could also be carried out on samples collected in this manner. Metals and grain sizing analysis alone would not require the organic solvent rinsing process.

2.0 SAMPLING SITES

2.1 Sample Sites (Plates 1 & 2)

Choose a sample site that has the following characteristics:

a) Limited access to prevent vandalism of equipment;

b) Good access by motor vehicle or boat, as the centrifuge and generator are heavy and not easily carried over embankments or slippery river channel cobbles and boulders;

c) In an area where a natural structure (i.e., a bridge or log) or the tripod support structure ensures that the March pump is located as far from the shoreline as possible in order to collect a representative sample; and

d) Choose a site that will give access to the main positive downstream flow and that will afford protection to the tripod, pump, and hose assembly from sweepers, ice flows, and other debris.

2.2 Pulp Mill (Plate 3)

The sample should be collected at a point of maximum mixing of the mill effluent just prior to discharge to the receiving environment. This is usually located at the final biobasin weir.

3.0 EQUIPMENT SET-UP

3.1 Centrifuge

a) Level a wooden pallet at the sampling site using an appliance level (Plate 4).

b) Set the centrifuge (Figures 1A & 1B - external view of centrifuge) on the back half of the pallet and recheck the level by positioning the level on the centrifuge frame.

c) Lay a piece of heat-treated foil, roughly 30x30 cm, on part of the front half of the pallet, then remove the bowl from its shipping container and put it on the pallet beside the foil.

d) Remove the bowl hood lock ring, then lift the bowl hood off the bowl base and put it still facing downward (to prevent contamination) on the foil, being careful to touch only the outside of the bowl with the hands.

e) Wearing a clean pair of polyethylene gloves, remove the distributor from the bowl base and put it beside the bowl hood on the foil.

f) Remove gloves, undo the two centrifuge cover hand clamps, lift the stainless steel (SS) centrifuge cover and lower the bowl base onto the threaded spindle in the centrifuge housing, allowing hands to touch the outside of the bowl <u>only</u> (Plate 5).

g) Clamp the bowl in the centrifuge housing using the two hand clamps located on opposite sides of the lower exterior of the centrifuge housing. The inner ends of these clamps must engage the drilled slots on opposite sides of the outer-lower edges of the bowl. Clamps should be tightened until just snug and equally so as not to put undue lateral pressure on the spindle.

SEDISAMP SYSTEM II MODEL 100 IL

FIG. 1A FRONT VIEW

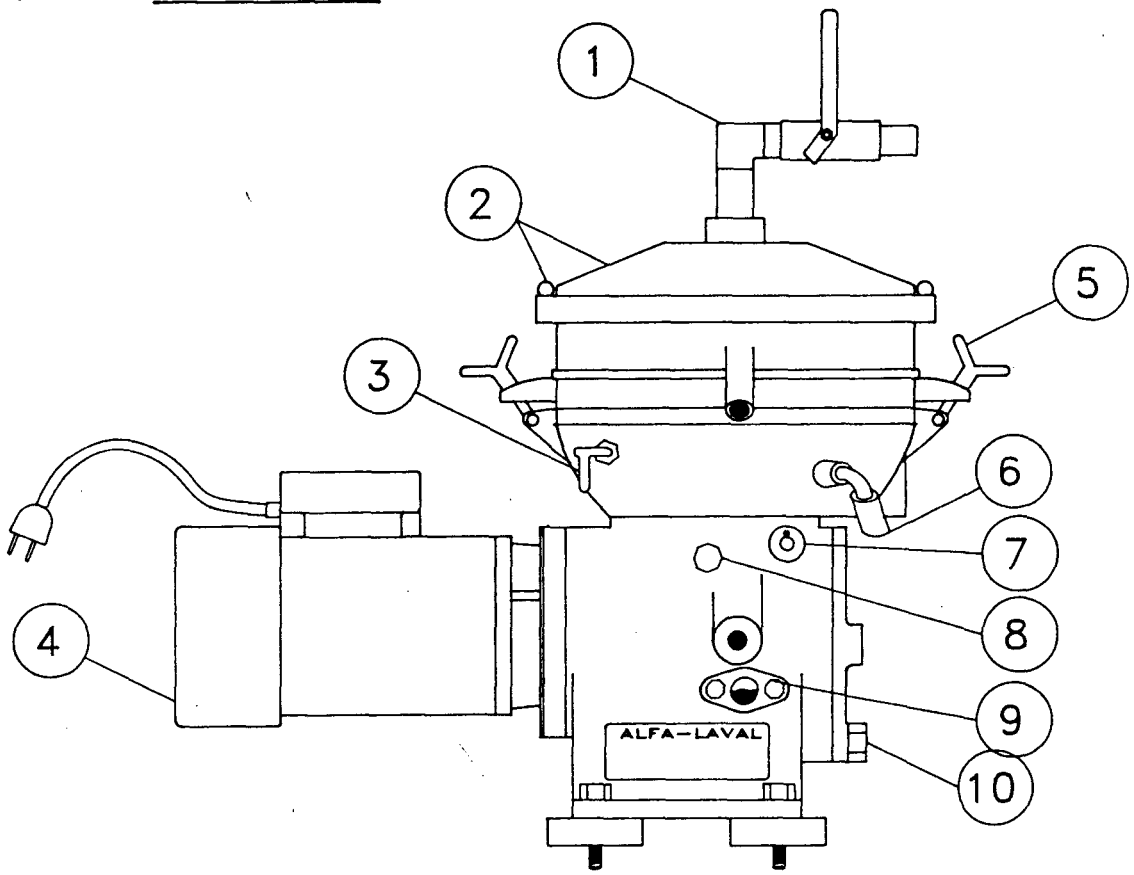

1 – INTAKE VALVE ASSEMBLY
2 – CENTRIFUGE LID WITH WING NUTS
3 – BOWL BRAKE
4 – ELECTRIC MOTOR (115 V /30 amp)
5 – COVER CLAMP
6 – BOWL CLAMP
7 – ROTATOR SHAFT COVER
8 – CRANKCASE OIL FILLER NUT
9 – CRANKCASE OIL LEVEL WINDOW
10– CRANKCASE DRAIN PLUG

FIGURE 1A: SEDISAMP SYSTEM II MODEL 100 IL FRONT VIEW.

FIG. 1B SIDE VIEW

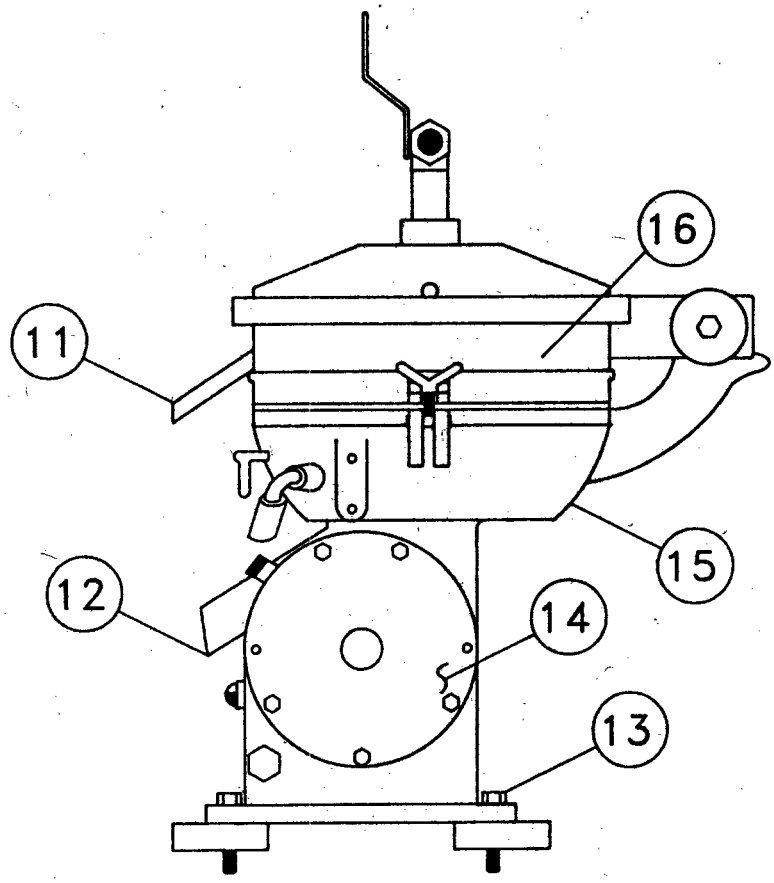

11- CENTRIFUGE LIQUID DISCHARGE PIPE
12- CENTRIFUGE LOWER HOUSING DRAIN PIPE
13- MOUNTING BOLTS
14- END SHIELD
15- CENTRIFUGE LOWER HOUSING
16- CENTRIFUGE COVER

FIGURE 1B: SEDISAMP SYSTEM II MODEL 100 IL SIDE VIEW.

h) Using a clean pair of gloves, remove the cap nut from its foil, install it on the spindle threads and tighten snugly - **IMPORTANT: DO NOT OVER TIGHTEN** (Plate 6).

i) Still wearing gloves, lift the distributor and disc assembly onto the spindle with cap nut installed and rotate until the locking key on the bottom of the distributor engages the key slot in the bowl base and the distributor falls into position (Plate 7). **IMPORTANT: the distributor key must engage the bowl base key slot, or the bowl hood locking ring will not tighten properly which will result in serious damage to the bowl parts and danger to the operators if the centrifuge is turned on.**

j) Position the bowl hood over the bowl base by lining up the locking key on the hood with the key slot on the top edge of the bowl and press into place (Plate 8).

k) Spray the threads of the bowl hood lock ring with Teflon spray lubricant, fit into position and rotate counter clockwise until hand tight.

l) Using the lock ring circular wrench and mallet, tighten the lock ring until the circular mark on the ring lines up with the mark on the bowl hood. The marks should line up to within at least 12.7 mm without using excessive force on the mallet. If the marks do not line up, the assembly of the bowl must be rechecked and repeated, if necessary. Do not operate the centrifuge if the marks do not line up as specified. Damage to the equipment and danger to the operators could result (Plates 9 & 10).

m) Spray the brass discharge collar lock ring with Teflon spray lubricant, place over the discharge collar and, using the discharge collar lock ring circular wrench, tighten the lock ring counter clockwise by hand until the end of the O-ring compression is felt -- the lock ring will not tighten any further (Plate 11).

n) Loosen bowl clamps, make sure the bowl brake on the outer-lower centrifuge housing is off, and spin the bowl to make sure it rotates freely.

o) Remove foil from top of the discharge collar, close the centrifuge cover, and tighten the cover clamps simultaneously until hand tight.

p) Remove the foil from the male end of the intake valve assembly to be threaded into the SS centrifuge lid and install the valve hand tight. Keep the foil on the other male end until the hose is ready to be connected (Plate 12).

q) Attach a length of 19 mm ID thick-walled Tygon or Teflon tubing to the centrifuge cover discharge pipe. Teflon is used only if the discharge water is to be analyzed for organics. The length of the tubing is determined by how close the sampling pump is to the receiving area for the centrifuge discharge. Place the hose downstream of the pump to avoid stirring up sediment which could be picked up by the centrifuge pump (Plate 13).

3.2 <u>Generator</u>

a) Position the generator as far away and downwind from the centrifuge as possible and practical, to prevent possible contamination from the generator exhaust. The farther the distance the centrifuge is from the generator, the thicker the gauge of electrical cable will be required to deliver sufficient power to the centrifuge.

b) Level the generator with the appliance level.

c) Ground the generator by using a portable Ground-fault Interrupter or by using a homemade ground device as follows:

i) drill a hole through a piece of copper tube approximately 30 cm in length and 12.7 mm OD.

ii) bare the ends of a 14-gauge, 3-wire cable, pass through the hole and wrap the wire around the copper tube;

iii) wrap the bared wires with electrical tape, then pound the tube at least 15 cm (6 in.) into the ground, if possible; and

iv) connect the other end of the 14-gauge cable to the ground terminal on the generator.

d) Make sure the generator is full of gas before starting the centrifuge. To fill, make sure to use a funnel to prevent gas spillage on the generator. Also, use a funnel with a grit screen in addition to the one in the generator, to ensure fine river sediments do not get in the gas tank.

e) If rain is expected during the sampling period, set up a waterproof tarp over the generator. Make sure there is space left under the tarp for fresh air for the generator carburetor and dispersal of generator exhaust. It is imperative that the generator runs at optimal performance for output voltage and a frequency of 60 cycles/sec (Plate 14).

f) The generator should be set as follows: (Plate 15)

i) Engine Switch Contact - **ON**

ii) Voltage Selector - **120V ONLY**

iii) AC Protector - **ON**

iv) Auto Throttle - **OFF**

g) Run the generator prior to centrifuge start-up, until it is warm and will idle down using the AUTO switch. In cold, wet weather this could take between 5 and 10 minutes.

3.3 <u>March Pump and SS/Teflon Hoses (Plates 16, 17 & 18)</u>

a) Ensure the fin assembly clamps are secure on the pump.

b) Connect a length of either braided nylon or poly rope, at least 6 mm diameter, to the fin using a shackle. Braided nylon rope can be tied to the shackle using a bowline knot, taping

the free end to ensure the knot will not come undone in the river water or effluent turbulence. Three strand poly rope does not hold knots well and a thimble should be braided onto the end of the line. The length of rope will be determined by the depth of the water the pump will be positioned in and the height above the water the pump is suspended from. **The pump should always be carried and suspended by the rope and <u>not</u> the electrical cable.**

c) Connect a stainless steel (SS) cable harness to the base of the fin assembly then, using a shackle, connect a SS cable 1 to 2 m long that has connection loops every 30 cm. A downrigger ball will be connected to this cable for pump ballast. This cable assembly can be left attached to the pump.

d) Determine whether one or two 7.5 m lengths of SS/Teflon hose is required for the sampling site.

e) Unravel the hose(s) carefully as the SS braided jacket cannot be twisted and will kink, which may impede the liquid flow into the centrifuge and cause back pressure on the March pump.

f) To join two hoses, remove the treated foil from the male/female connectors at the hose ends and tighten snugly with large crescent or adjustable wrenches. There is no need to over tighten as the pressure in the hose from the pump is minimal. Both hoses come with female ends, so a male connector is needed to join them. The male connector can remain attached to one hose even during cleaning.

g) Remove the foil from one of the remaining female ends and connect to the male end of the intake valve assembly. Again, just tighten until snug.

h) Connect the other female end of the hose to the male connector of the pump.

i) To prevent large debris particles from entering the pump impeller, connect a SS wire mesh screen to the pump nozzle using a SS screw clamp. The screen should have a large surface area (i.e., in the shape of a tennis ball) to ensure that it does not clog during operation. A clogged intake will cause cavitation which will burn out the pump. To re-use the screen, make sure to clean it with a scrub brush if clogged with residue from previous sampling.

j) Immerse the pump in the river water or effluent, switch the generator **AUTO THROTTLE** to **OFF** and start the pump by plugging the electrical cable into the **AC OUT-120V 15A** circuit. Flush the pump and hose out for a minimum of 10 minutes in river water and 5 minutes in effluent. **IMPORTANT: make sure the pump intake is ALWAYS submerged.** The pump uses water as its lubricant. The pump will burn out almost instantly if operated out of water.

k) After flushing, disconnect the pump electrical plug and connect the male/female connectors on the pump and hose, respectively, using a large crescent wrench and/or adjustable pliers. Tighten until snug.

l) Return the generator **AUTO THROTTLE** to **AUTO**.

3.4 Pump Tripod

a) Set the tripod (or ladder) in the river in accordance with Section 2.1 above. The maximum distance from shore and maximum depth in the water will be determined by the length of the hoses and height of chest waders, respectively. Make sure the tripod/ladder has a stable base, and secure by any means available. A combination of river rocks, long planks, and rope can be used to ensure the set-up remains in position (Plate 19).

4.0 START-UP PROCEDURE

4.1 River Sampling

a) Estimate the depth of water at the tripod/ladder.

b) Connect a 2.25 or 4.5 kg downrigger weight to one of the SS cable loops under the pump so that the weight is suspended just above the river bottom and the pump will be suspended about 0.3 m below the water surface when the suspension rope is taut on the tripod/ladder.

c) Tie the suspension rope to the top of the tripod/ladder using a bowline or other secure knot. Make sure the fin assembly has the pump nozzle aligned into the river flow. This might have to be done by feel, depending on water turbidity.

d) Loop the pump hose and electrical cable through the top of the tripod/ladder so the hose will not kink and the electrical cable connection at the pump will not be strained (Plate 19).

e) Keep the hose and electrical cable out of the river by whatever means available (i.e., by suspending on wooden or metal stakes), if possible (Plate 19).

4.2 Effluent Sampling

a) Connect the appropriate size downrigger weight to the SS cable harness below the pump as in the river set-up. Suspend the pump 0.3 m below the surface of the effluent at the discharge weir. Make sure the fin assembly keeps the pump nozzle facing into the flow.

b) Using a bowline or other secure knot, tie the end of the suspension rope onto a secure support, like a metal railing (Plate 3).

c) As in river sampling, run the hose and electrical cable over the pump support to prevent kinking and cable strain.

4.3 General

a) Connect the 12-gauge centrifuge extension cord to the **AC OUT-120V 30A** plug in. This is a special 30A male plug-in jack that requires a clockwise twist after insertion (Plate 20).

b) Turn generator **AUTO THROTTLE** switch to **OFF**, wait until generator throttles up to full RPM, plug in the frequency meter into one of the 120V 15A sockets, and make sure the frequency is in the 60 cycles/min. ± 2 range. If the frequency falls outside this range, the generator motor frequency adjust screw must be adjusted with a Phillips screw driver (Plates 21 & 22).

c) Before plugging in the centrifuge male 3-prong electrical connector to the 12-gauge extension cable (which is plugged into the generator), recheck the following:
   i) the centrifuge is still level;
   ii) the bowl clamps are released and backed off enough for sufficient clearance from the spinning bowl;
   iii) the bowl brake is off;
   iv) the centrifuge cover clamps are equally hand tight;
   v) the centrifuge lid wing nuts are hand tight;
   vi) there is clean oil filling half of the crankcase oil reservoir window;
   vii) the intake valve is partially open; and
   viii) all other centrifuge housing and motor bolts, nuts, and cotter pins are secure.

d) Plug in the centrifuge, watching and listening for the following:
   i) the rotator shaft starts to turn slowly;
   ii) the oil in the reservoir window begins to circulate;
   iii) the centrifuge slowly increases rotation speed; and
   iv) there is no excessive vibration or unusually loud or grinding noises.

e) The centrifuge should attain full RPM after approximately two minutes. This can be checked by counting the rotator shaft revolutions, by observing the dot on the shaft cover (Plate 23). The shaft should revolve 90 revs/min. at proper operating speed. During this start-up phase until full speed is achieved, the centrifuge will go through a couple of minor vibration and high pitched "whir" phases. This is normal. If, however, there is persistent excessive vibration or unusual sounds like metal grinding on metal, the centrifuge should be disconnected **IMMEDIATELY** and the vibration and/or noise source investigated. Malfunction of the SS bowl at high speeds could pose **serious danger** to the operators from metal fragmentation. If such an incident occurs, the operators should get as far away from the centrifuge as quickly as possible until the incident ceases.

f) After the centrifuge reaches operating speed, plug the March pump electrical cord into the 15A plug-in. The hose(s) should "jump" as the initial pulse of water passes through to the centrifuge. Make sure the centrifuge intake valve is partially open so as not to create full back pressure on the pump. If the valve is open too far, water will overflow and flood the centrifuge housing. This water loss would lead to a false total sample volume and could lead to premature corrosion of the spindle, spindle seal, and bearing.

g) Slowly open the intake valve, by pushing the blue lever in the direction of the arrow, just until you hear water hitting the metal surface inside the bowl housing (i.e., a high pitched whine). If overflow occurs, water will pour out the lower centrifuge housing drain. If this occurs, the valve will have to be closed almost completely and the process repeated.

h) **Slowly** increase the intake flow until 4 litres/min. are discharging through the Tygon tube. This flow can be measured by an inline flow meter, or with a 2 or 4 litre container and a stop watch. The flow should be rechecked 5 minutes after the

initial reading, in case the flow has not stabilized. After these readings, the flow should remain stable throughout the sampling period, but should be checked at least every hour thereafter.

i) Record the start-up time to enable the calculation of total flow at the end of the sampling period.

j) A guideline for sample collection rates based on river suspended solid levels is reported in Table 1.

TABLE 1: CENTRIFUGATION TIME AND SUSPENDED SOLIDS GUIDE

RIVER x TSS* (mg/L)	TIME (hr)	SOLIDS COLLECTED (g/hr)		CENTRIFUGE TSS (mg/L)	
		Calculated	Actual**	Inlet	Outlet
38	7	9	12	36	<2
145	3.75	35	58	135	<2
706	2.70	174	171	695	8

* at 4 L/min.
** approximate value only @ $\bar{x}$ 40% moisture

5.0 OPERATIONAL GUIDELINES

5.1 Important Notes

a) Do Not allow the generator to run out of gas while the centrifuge is running. This could damage the electric motor by causing abrupt changes in output voltage and frequency.

b) Do Not operate the centrifuge without the bowl installed.

c) Do Not operate the centrifuge if there is abnormal noise and/or significant vibration. The machine will develop a rhythmic cadence and operate at a high noise level during normal operation.

d) Do Not allow the pump to run dry. The pump will burn out rapidly if not submerged. If the pump malfunctions, it can be dismantled as shown in Figure 2 (from Fischer and McCrea, n.d.).

e) ALWAYS keep electrical cables out of the water (Plate 19).

f) Do Not handle live electrical components while standing in the river or in wet conditions.

5.2 General

a) Check the flow and inspect the centrifuge system at least once per hour. If the system is shut down for any abnormal problem, recheck the system 5 minutes and 30 minutes after restart, then every hour if stabilized.

b) Check that there are no leaks at any of the hose connections.

c) Make sure that water does not discharge from the lower centrifuge housing drain (Figure 1B). If this occurs, the flow must be readjusted or the centrifuge shut down to determine the problem.

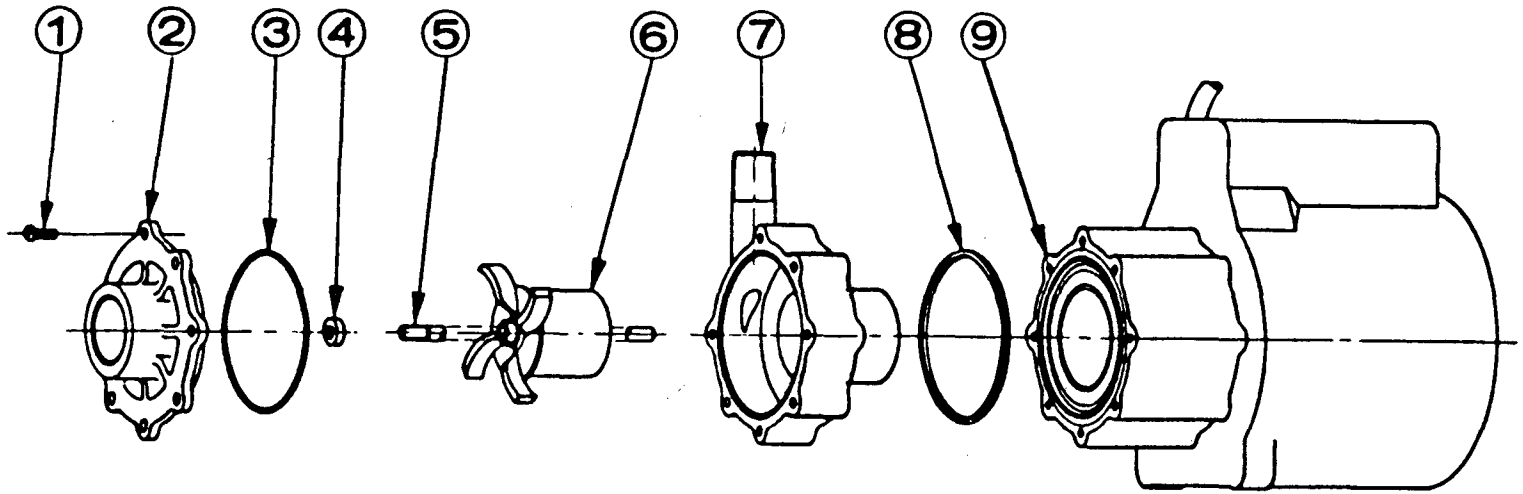

LEGEND

1 - Machine screw
2 - Cover
3 - "O" Ring
4 - Ceramic thrust washer
5 - Spindle
6 - Impeller assembly
7 - Pump housing
8 - Quad ring
9 - 5C-MD motor; magnetic drive

FIGURE 2: MARCH PUMP MODEL 5C-MD.

d) The Honda generator will run for approximately 6 hours before it needs refuelling. DO NOT refuel while the generator is running. Refuel as follows:

i) unplug the pump power cord;

ii) unplug the centrifuge power cord;

iii) turn off the generator; and

iv) use the funnel with grit screen to top up the gas tank, with regular unleaded gasoline, making sure not to spill gasoline on the generator. If a small amount of gas is spilled, wipe it up and/or allow it to evaporate before restarting the generator. Failure to do so could result in a fire and/or explosion.

5.3 Shut Down

a) Follow the same shut-down sequence as in 5.2 (i-iii), for generator refuelling.

b) While the centrifuge is decelerating, all other equipment can be disassembled. Roll the SS/Teflon hoses up like a garden hose being careful not to kink them by rolling too tight. Roll only tight enough to fit in the yellow shipping box.

c) The centrifuge will take 5 to 10 minutes to stop on its own. The bowl brake is used to speed up this process. The brake is only effective at low bowl RPM, however, so only engage it after the bowl has slowed considerably. The bowl revolutions can be estimated by observing the rotator shaft cover (Figure 1A).

d) When the rotator shaft has come to a complete stop, unscrew the two cover clamps and lift the cover up to its open rest position.

e) Immediately put a piece of heat-treated foil over the discharge collar to prevent any contamination from entering the bowl during the bowl removal process.

f) Release the brake and tighten the bowl clamps the same way as when the bowl was installed.

g) Use the two circular wrenches to loosen the two bowl lock rings (Figure 3). During this process, make sure to secure the centrifuge cover, as pounding the bowl cover lock ring may cause it to fall back into position. The cover is heavy and could damage the cast lower casing and/or injure the operator.

h) With the bowl clamps still tight, remove only the bowl cover ring and set it aside.

i) Since the bowl has to be opened in the field to remove it from the centrifuge, extreme caution must be exercised to prevent contamination of the sample, which has been opened to the atmosphere (Plates 24 & 25). Proceed as follows:

   i) cover the centrifuge by whatever means from wind, rain, or snow;

   ii) lay out sufficient heat-treated foil to put the bowl cover and distributor assembly on;

   iii) touching <u>only</u> the outside of the bowl cover, carefully lift it off and rest it on the foil. If, upon inspection, there is sample sediment on the inner rim, invert the cover and rest it on the discharge collar neck, then cover with foil. Otherwise, rest face down. The inside of the bowl should be filled with liquid and there should be a layer of sediment caked to the inner bowl walls (Plate 25);

   iv) **<u>wearing clean polyethylene gloves</u>**, slowly lift the distributor assembly out of the bowl, allowing all of the water/sediment trapped in the disc stack to drain into the bowl. Place the assembly in a solvent-washed Teflon bowl to capture any additional water/sediment;

   v) **<u>still wearing the gloves</u>**, take the solvent-rinsed crescent wrench and carefully remove the cap nut from the bowl spindle. Make sure not to drop the nut into the bowl;

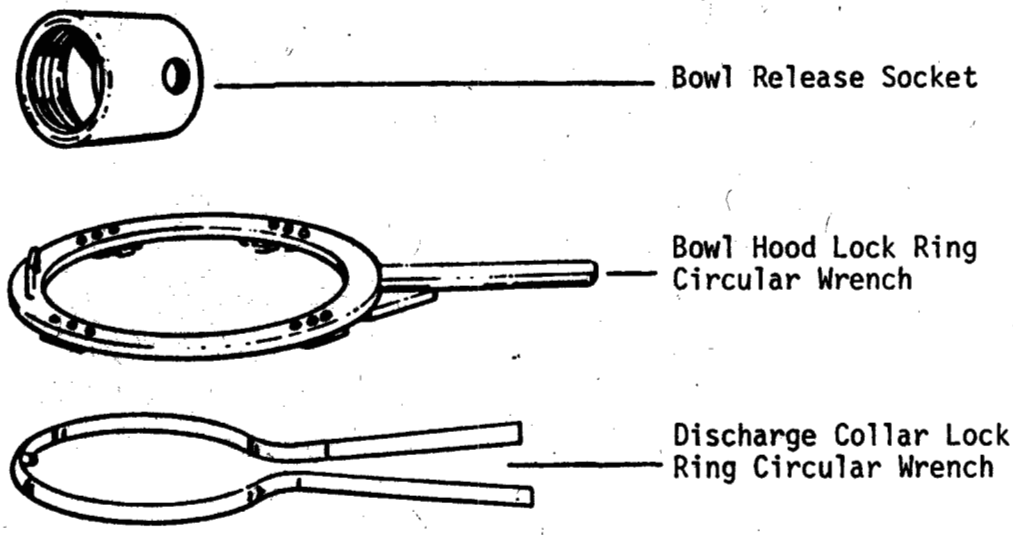

FIGURE 3: CENTRIFUGE BOWL TOOLS.

vi) **still wearing the gloves**, take the solvent-rinsed bowl release socket (Figure 3) and screw driver and free the bowl on the spindle by turning the socket clockwise. Remember that the bowl clamps are still tightened but they can travel in the slots on the sides of the bowl as the socket is turned down. Turn the socket only enough to release the bowl from the spindle. This is achieved by observing the movement of the bowl clamp pins in the bowl slots;

vii) release the bowl clamps and lift the bowl out of the centrifuge housing using the screw driver inserted through the hole in the bowl socket, as a lift bar. The bowl can be set down anywhere on the pallet as the outside of the bowl does not come in contact with the sample. Handle the bowl carefully to prevent resuspension of the sediment with the liquid; and

viii) carefully reassemble the bowl for transport. The distributor should be reinstalled to minimize liquid in the bowl from being agitated and resuspending solids from the inner bowl walls. The bowl hood lock ring only needs to be tightened until snug. Transport the bowl as level as possible and in a manner that minimizes movement on bumpy roads.

6.0 SAMPLE RETRIEVAL

For ease of sample retrieval and sample quality control, the sample retrieval should be done in a laboratory (e.g., local provincial MOE lab), or, if necessary, the motel room. The procedure is as follows:

a) Prepare a clean work area.

b) Remove the bowl cover. Wearing a clean pair of polyethylene gloves, remove the distributor assembly as in Section 5.3(i). Minimize liquid disturbance in the bowl when removing the distributor to prevent resuspension of the solids cake.

c) Put the distributor assembly in the Teflon basin for retrieval of any sediment adhering to the assembly (Plate 24).

d) Still wearing the gloves, unwrap the 50 mm solvent-washed glass syringe from its foil and, using the syringe, carefully drain the liquid from the bowl into a 1 L solvent-washed, Teflon, wide mouth bottle (Plate 26).

e) Using a combination of solvent-washed SS spatula, Teflon policeman, or Teflon card, scrape all of the sediment from the bowl walls and mix thoroughly with the sediment in the bowl bottom. Mix in any removable sediment from the distributor as well.
NOTE: There will be a small quantity of fine sediment adhering to the plates but it is not efficient to recover it due to the number of plates, the time requirement, and the low percentage of total sample that it represents (Ongley and Thomas, 1988).

f) Using SS or Teflon spatulas, transfer the sediment into the solvent-washed 125 ml Teflon bottles, preweighed on the electronic balance. The bottles will hold approximately 20 to 60 grams of sediment, depending on sample type.

g) To remove the remaining sediment in the bowl, pour some of the bowl liquid from the 1 L Teflon, wide mouth bottle into a 1 L wash bottle. Virtually all of the sediment can be recovered in this manner (Plates 27 & 28).

h) The sediment samples should be put on dry ice as soon as possible after recovery and be kept frozen until analyzed. The liquid/sediment mixture in the 1 L bottle will be laboratory centrifuged so that a total sediment amount can be determined for the sample period.

7.0 CLEANING PROCEDURE

7.1 Protocol

The protocol for these procedures is based on Section 4.4 - Glassware and Materials Preparation - from the "Reference method for the determination of polychlorinated dibenzo-para-dioxins (PCDDs) and polychlorinated dibenzofurans (PCDFs) in pulp and paper mill effluents" (Environment Canada, 1992). Additional and supporting information was obtained from the National Water Research Institute, Burlington, Ontario, and Conservation and Protection, Environmental Protection Contaminants Control - Toxic Chemicals Program, Pacific and Yukon Region.

7.2 Equipment Preparation

The bowl parts and other metal accessories should be cleaned as soon as possible after field use, to prevent rust or other corrosion of the stainless steel surfaces. Chloride can cause rapid erosion (pitting) of stainless steel.

7.3 Materials Required

- laboratory coats
- protective eye goggles
- dual respirators with organic vapour cartridges
- PVC or latex gloves
- polyethylene gloves
- FL-70 laboratory grade detergent
- dioxin-free sponges or cleaning cloth
- dioxin-free scrub brushes, beaker, and test tube brushes
- brass wire brush
- Benchkote bench cover (dioxin-free, if possible)
- distilled water
- High Purity acetone, hexane, dichloromethane (methylene chloride)
- Nalgene safety bottle carriers for 4 L solvent bottles
- abundant supply of heat-treated foil (325°C for 15 hours)
- organic solvent spill kit
- SS vats, SS pans

- SS funnels
- SS tongs, SS or Teflon policeman(men)
- Teflon 1 L wash bottles
- fume hood

7.4 Items to be Cleaned

- SS centrifuge bowl assembly including: SS bowl base, brass distributor, SS discs, SS bowl base cap nut, brass top disc, SS bowl hood, SS discharge collar, steel bowl hood lock ring, brass discharge collar lock ring, lock ring O-rings (2), bowl release socket
- SS water intake valve assembly
- SS/Teflon hoses and M/F connectors
- steel screw driver for bowl release socket
- crescent wrench for SS cap nut
- 50 mm glass syringe with SS tip
- all SS and Teflon vats, pans, spatulas, policemen, sample containers, wash bottles

7.5 Methodology - Bowl Parts, Sample Containers, Washing Equipment (Figure 4)

a) Disassemble the centrifuge bowl completely, including the removal of the two O-rings and the removal of all the discs from the distributor.

NOTE: keep the disc without holes (the bottom disc) separate from the others as it **must** be placed on the distributor **first** upon reassembly, and use caution when removing O-rings with a SS spatula to make sure not to cut the rubber.

b) Initially rinse any easily removable sediment, dirt, grease, etc., from the bowl parts, stainless steel or Teflon accessories, and sample containers using warm tap water and dioxin-free cloth, sponge, or scrub brushes.

c) Clean an appropriate amount of bench top allowing enough space to air dry individual parts. After cleaning, cover bench space

preferably with heat-treated foil, or if not available, at least with fresh Benchkote.

d) Combine an appropriate amount of FL-70 detergent with hot tap water and thoroughly wash the sampling equipment as in 2(b), then rinse with plenty of cold tap water to remove residual surfactant.

e) Air dry clean equipment if time permits, using bench space prepared in (c), then rinse thoroughly with distilled water. Minimize distilled water rinse where distilled water is in limited supply.

f) Air dry as in (e) if at all possible, as distilled droplets will freeze in organic solvent baths preventing proper evaporation of solvents from the cleaned equipment. This may lead to cross contamination of the solvent baths and hamper reassembly of the bowl parts until they are properly dried.

g) In a fume hood or, if not available, using the appropriate organic respirators and protective eye goggles in a well ventilated room, sequentially rinse three 1 L Teflon wash bottles with acetone, hexane, and dichloromethane (optional). Then, after drying, fill these bottles approximately 1/3 full with acetone, hexane, or dichloromethane using a minimal amount of the solvents. Label them with a metal scribe -- these bottles will be used repeatedly to solvent rinse SS vats and pans and all other parts and sampling containers that cannot be dipped in vats or pans.

h) Using the three solvent wash bottles, sequentially rinse three SS vats (approximately 15 x 15 x 15 cm) and lids, to be used for dipping the SS discs and other applicable parts.

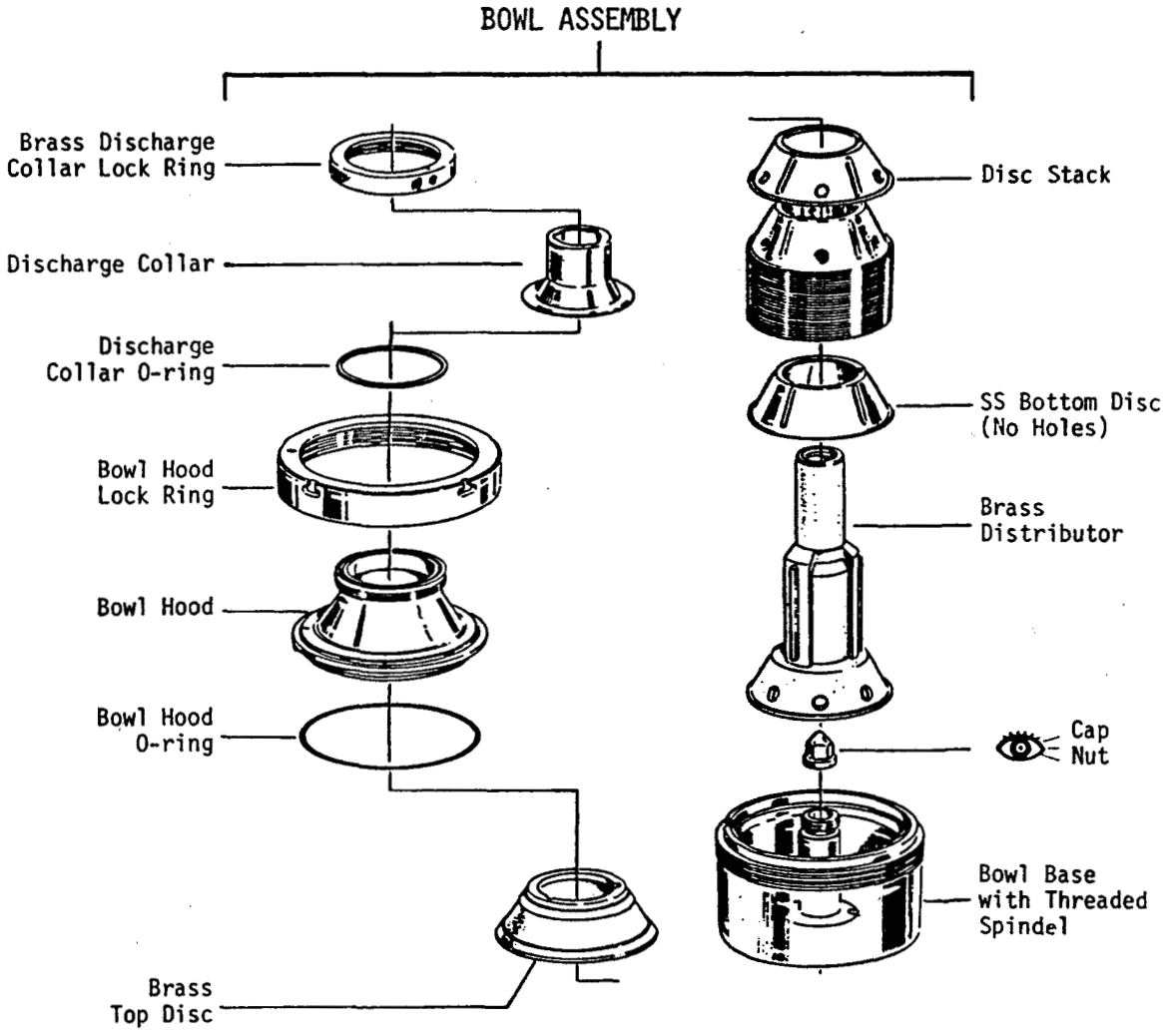

FIGURE 4: SEDISAMP SYSTEM II MODEL 100 IL CENTRIFUGE BOWL.

i) Prepare an additional amount of clean bench space to air dry the solvent-rinsed parts. The bench top **must** be covered by heat-treated foil to prevent possible contamination after solvent rinsing.
NOTE: it is best to have the heat-treated foil cut in 1 m (3 ft.) lengths for this purpose -- the **shiny** side is the treated side to be used.

j) In a fume hood, or using appropriate safety gear as in (g), set out the three solvent vats, marked with a metal scribe for identification and re-use, and fill with just enough acetone, hexane, or dichloromethane to cover the SS discs.

k) Sequentially dip bowl discs and any other parts/sampling containers that can be totally immersed, in the acetone, hexane, and dichloromethane, using solvent-rinsed SS tongs, allowing as much solvent as possible to evaporate between rinses. The procedure can be very time consuming if parts are allowed to totally dry between rinses, but on the other hand, too much unevaporated liquid solvent will be transferred to the next vat, diluting and possibly contaminating the solvent (Plate 29).

l) After the three-solvent rinse, lay the parts on the heat-treated foil [as prepared in (i)] to dry.

m) In a fume hood or using appropriate safety gear as in (g), set out the three solvent wash bottles and a SS waste solvent pan (approximately 30 x 45 x 15 cm), and sequentially rinse the remaining SS and Teflon equipment using the solvent in the wash bottles. In this procedure, at least one pair and preferably two pairs of polyethylene gloves **must** be worn to avoid skin contact with the organic solvents and to prevent contamination of the equipment as organic solvents will dissolve other rubber or latex gloves (Plate 30).

NOTE: the waste solvent should be properly disposed of in an approved waste solvent container as soon as possible after equipment rinse, to prevent evaporation to the atmosphere.

n) As in (l), lay all rinsed parts on heat-treated foil and let dry completely before reassembly.

7.6 Methodology - SS/Teflon Hoses

a) Ideally, the Teflon hoses should be flushed with tap water for at least 15 minutes before the solvent cleaning procedure is applied. This can be done by making an adapter to fit the female SS hose end and the faucet.

b) Prepare a hot water soap solution as in the preceding section, in a small glass or SS bowl.

c) Unravel the hoses to full length, positioning a SS wash pan at each end.

d) Using a SS funnel, with one person at each end of the hose, pour about 1 litre of the solution into the hose.

e) Using a small piece of heat-treated foil or dioxin-free cloth or sponge to prevent the escape of liquid, rinse the soap solution back and forth at least three times by alternately raising and lowering the ends of the hose, then drain the liquid into one of the wash pans.
NOTE: to ensure complete drainage of the hose, make sure one end of the hose is held as high as possible and the hose is held taut.

f) Repeat this process using distilled water and then the three solvents (dichloromethane is optional) in succession -- the solvent in the three vats can be used for this rinse procedure.

NOTE: since the hose cleaning procedure must be done in a large room with the hoses fully extended, all safety apparatus **must** be worn and the room ventilated.

g) After solvent rinsing, the ends of the hoses should be covered with a double layer of heat-treated foil and taped to the hose casing to prevent any contamination before use.

h) The solvent used that is drained into the wash pan (not mixed with water) should be poured immediately into the waste solvent container to minimize atmospheric contamination of the room.

7.7 **Methodology - March Pump**

a) Since it is not feasible to clean the March pumps with organic solvents (the solvents may damage internal pump parts), the pump impeller housing can be easily dismantled and the housing and internal components cleaned using hot soapy water, a scrub brush and then rinsed with distilled water. Alternatively, it may be practically cleaned by continual flushing with hot tap water, as done with the hoses, for at least 15 minutes.

b) The pump intake screen should be cleaned using hot soapy water, a scrub brush, and then rinsed with distilled water.

8.0 EQUIPMENT PREPARATION FOR FIELD

8.1 Bowl Reassembly (Figure 4)

a) Use a clean pair of polypropylene gloves to reassemble the bowl and cover the remaining solvent-washed equipment with heat-treated foil.

b) With the brass distributor standing on foil, fit the disc without holes all the way to the base of the distributor stack.

c) Stack the remaining 51 discs (with holes) on the distributor being careful not to bend the discs -- some of the discs might fit snugly and could easily be bent if forced onto the distributor.

d) Ensure the discs are properly installed by lightly tapping the distributor assembly on the counter. If the discs are not properly seated, the steel bowl hood lock ring cannot be tightened as per the specifications, which could cause imbalance and bowl vibration at high RPM.

e) Position the distributor/disc assembly on the SS bowl base spindle and rotate until the locking key engages the key slot in the bowl base and the distributor drops into position.

f) With the aid of a solvent-washed SS spatula (if necessary), install the bowl hood O-ring, being careful not to cut or twist the rubber.

g) Position the bowl hood over the bowl base by lining up the locking key in the hood with the key slot in the base, and fit into position.

h) Fit the bowl hood lock ring into position on the closed bowl and rotate counter clockwise by hand until the ring is just

snug, then loosen slightly just until free; this leaves no pressure on the O-ring while not in use.

i) Install the discharge collar O-ring into the top O-ring groove of the bowl hood by pressing it into position with the finger tips.

j) Place the SS discharge ring into position on top of the O-ring.

k) Fit the discharge collar brass lock ring over the collar and rotate counter clockwise by hand until snug, then loosen slightly.

l) Cover the liquid intake at the top of the discharge collar with two pieces of treated foil to prevent contamination of the bowl before re-use.

8.2 <u>Solvent-Washed Equipment</u>

a) Using either the treated foil used to lay solvent-washed parts on or fresh treated foil, wrap the remaining solvent-washed parts and sampling equipment that are not self-sealing. This includes the bowl base cap nut, the bowl release socket, the ends of the liquid intake valve assembly, the bowl release socket screw driver, the cap nut wrench, the 50 mm glass syringe, and the SS and Teflon spatulas and policemen.

b) Place all foil wrapped items, wash bottles, and sample bottles into heavy duty zip lock bags. Label the bags and write the date the item was solvent-washed on the label to ensure quality control between sampling episodes.

c) Use the remaining treated foil to seal and secure the lids on the solvent vats and Teflon sample bowls to prevent contamination and to allow the vats to be used again without re-rinsing with the three solvents.

8.3 General

All equipment should be packed in protective shipping containers to prevent breakage and/or spillage in transit. The sedi-bowl **must not** be transported on the centrifuge spindle, as the spindle could be bent, destroying the balance of the centrifuge, which could cause severe damage to the machine at high RPM and pose serious danger to the operators.

Although the organic solvents used are dangerous chemicals, they are not classified as "dangerous goods" under the Transportation of Dangerous Goods Act (TDG) due to the small volume being used. As a result, a TDG manifest and placarding is not required. The solvent containers must, however, be labelled with WHMIS labels and the shipping containers should be labelled with appropriate TDGR labels. In addition, the shipment should be accompanied by copies of the solvent Material Safety Data Sheets (MSDS) and a safety spill kit for organic solvents. Dichloromethane is considered extremely hazardous, is on the CEPA Priority Substances List, and should be treated with caution (see MSDS sheet).

9.0 EQUIPMENT MAINTENANCE

The centrifuge equipment should be cleaned as soon as possible after use to prevent buildup of deposits and/or corrosion of parts, especially the bowl. The cleaning should proceed up to at least the distilled water stage. The components should then be stored in a dry environment and loose so as not to stress O-rings or threads.

The equipment, especially bowl parts, should be inspected for damage or pitting every time they are cleaned. A written record of each inspection should be recorded even if nothing is evident. The total hours of machine operation should be recorded for determining inspection and maintenance times.

For more detailed maintenance, refer to the Alfa-Laval MAB 103B Maintenance/Repair Manual and/or contact Alfa-Laval Ltd., Industry Division in Scarborough, Ontario, (416) 299-6101. The Maintenance Manual contains Maintenance Log sheets for recording inspection and maintenance information.

The Honda generator should be maintained as per its accompanying maintenance manual.

REFERENCES

Alfa-Laval Limited. [c. 1988]. Mineral Oil Separator MAB 103B-20 MAB 103B-24C Maintenance Repair Manual. Book No. MR SO 1032E 6/8808. Alfa-Laval Separation AB-S-147 80. Tumba, Sweden.

Alfa-Laval Limited. [c. 1988]. Spare Parts Catalogue MAB 103B-24C, 24-60, 29, 29-60. Book No. SPC S 93276 E3/8805. Alfa-Laval Separation AB-S-147 80. Tumba, Sweden.

B.C. Environment. 1992. Pulp mill and pulp and paper mill liquid effluent control regulation. Victoria.

Envirodata Limited. 1987. Sedisamp System-II Model 100 and 100 IL Operator's Manual. Burlington.

Environment Canada. 1992. Reference method for the determination of polychlorinated dibenzo-para-dioxins (PCDDs) and polychlorinated dibenzofurans (PCDFs) in pulp and paper mill effluents. Report EPS VRM/19. Conservation and Protection, Chemistry Division, River Road Environmental Technology Centre. Ottawa.

Environment Canada. 1990. Canadian Environmental Protection Act, Priority substances list assessment report No. 1, Polychlorinated dibenzodioxins and polychlorinated dibenzofurans. Environment Canada and Health and Welfare Canada. Ottawa.

Fishcher, J.D., and R.C. McCrea. [n.d.] Design and operation of a multiple-intake water quality monitoring station at Point Edward. Environment Canada, Inland Waters/Lands Directorate. Ontario Region. Burlington.

Horowitz, A.J., K.A. Elrick and R.C. Hooper. 1989. A comparison of instrumental dewatering methods for the separation and concentration of suspended sediment for subsequent trace element analysis. Hydrological Processes 2:163-184.

Niagara River Data Interpretation Group Monitoring Committee. 1989. Joint evaluation of upstream/downstream Niagara River monitoring data for the period April 1987 to March 1988, Final Report. Burlington.

Ongley, E.D., T.R. Yuzyk and B.G. Krishnappan. 1990. Vertical and lateral distribution of fine-grained particulates in prairie and cordilleran rivers: sampling implications for water quality programs. Water Resource 24(3):303-312.

Ongley, E.D., and R.L. Thomas. 1988. Dewatering suspended solids by continuous-flow centrifugation: practical considerations. National Water Research Institute Contribution #88-105. Burlington.

APPENDIX I

LIST OF EQUIPMENT MANUALS

APPENDIX I LIST OF EQUIPMENT MANUALS

1. Envirodata Limited Sedisamp System-II Model 100 and 100 IL Operator's Manual, 1987.

2. Alfa-Laval MAB 103B Spare Parts Catalogue, Book No. SPC S 93276 E3/8805.

3. Alfa-Laval MAB 103B Maintenance Repair Manual, Book No. MR SO 1032E 6/8808.

4. Honda EB4500X-EB5000X Owner's Manual, Honda Motor Co. Ltd., 1988.

5. Ohaus Port-O-Gram Electronic Balance Directions and Maintenance Manual, Models C151, C301, C301P, C501, C3001, Ohaus Scale Corporation, 1985.

APPENDIX II

LIST OF SAMPLING EQUIPMENT AND SPARE PARTS

APPENDIX II LIST OF SAMPLING EQUIPMENT AND SPARE PARTS

I. Sampling Equipment

1. Sedisamp System-II Model 100 IL Centrifuge (modified Alfa-Laval Model MAB 103B) with stainless steel (SS) water intake valve assembly male JIC * Male JIC - Envirodata Ltd., Burlington.

2. Tygon tubing, thick-walled 19 mm ID, 6 m length. Fisher Scientific, Vancouver.

3. Teflon tubing, thick-walled 19 mm ID - Cadillac Plastics, Vancouver.

4. J-B-T frequency meter Model 34-FHXX ser A - Envirodata Ltd., Burlington.

5. Honda EB5000X portable electric 5 Kw generator

6. Centrifuge electrical extension cord 120V-30A - 12/3 Type SO - Automarine Electric, Vancouver.

7. March submersible electric pump Model 5C-MD with Vitron O-ring head gasket and 50 ft. (15 m) electrical cord with watertight connection - Envirodata Ltd., Burlington.

8. Aluminum pump fin - Protech Welding and Machine Works, North Vancouver.

9. Downrigger 4.5 kg balls with shackle - Army & Navy, Vancouver.

10. SS braided Teflon 13 mm ID hose, 7.5 m length, G157.10 - Greenline Sales, Vancouver.

11. SS female JIC swage FTG (swivel hose end connectors), G4005SS.10.10 - Greenline Sales, Vancouver.

12. SS male JIC * male JIC adapter (hose to hose connector), G1515SS.10.10 - Greenline Sales, Vancouver.

13. SS male JIC * female NPT adapter (pump to hose connector), G1508SS.08.10 - Greenline Sales, Vancouver.

14. AO R5500 NFE respirator facepiece (medium), 761044 - Fleck Bros. Ltd., Burnaby.

15. AO R51A organic vapours cartridge - Fleck Bros., Burnaby.

16. NOCon 160 protective goggles, 341E622 - Safety Supply Canada, Vancouver.

17. Spill-X multi-purpose spill kit, B99940 - BDH Chemicals, Vancouver.

APPENDIX II CONT'D.

18. Crown 6075 dry film fluorocarbon (TFE) lubricant, 12-008-8 - Fisher Scientific, Vancouver.

19. Syringe, reusable 50 cc, S9529-50 - Canlab, Vancouver.

20. Safety bottle carrier, 4 L, A1100-6A - Canlab, Vancouver.

21. SS micro spoon/spatula, S1585 - Canlab, Vancouver.

22. SS laboratory scoop, S1015-C - Canlab, Vancouver.

23. Teflon round basin, L-6753-00 - Cole Parmer, Illinois.

24. Teflon 1000 ml wide mouth bottle, L-6044-40 - Cole Parmer, Illinois.

25. Teflon 1000 ml wash bottle, L-6052-80 - Cole Parmer, Illinois.

26. Teflon policeman, L-6369-00 - Cole Parmer, Illinois.

27. Teflon stir rod, L-6373-10 - Cole Parmer, Illinois.

28. Teflon 125 ml narrow mouth bottle, L-6023-10 - Cole Parmer, Illinois.

29. Stainless steel ware (vats, pans, tongs, scoops, etc.) - Dunlevy Sales Ltd., Vancouver.

30. Ohaus Port-O-Gram electronic balance Model C501 - Fisher Scientific, Vancouver.

II. **Spare Parts**

1. Discharge collar O-ring

2. Bowl hood O-ring

3. SS cap nut

4. Centrifuge end shield gasket

5. Crankcase oil level window glass and gasket

6. Brake plug

7. Electric motor friction pads

APPENDIX III

LIST OF TOOLS REQUIRED

APPENDIX III LIST OF TOOLS REQUIRED

1. Bowl hood lock ring circular wrench
2. Discharge collar lock ring circular wrench
3. Bowl release socket
4. Standard and metric socket set
5. Screw driver set including one large straight driver
6. Large and small adjustable wrenches
7. Large and small crescent wrenches
8. Wire brush
9. Emery paper No. 600
10. WD-40 lubricant
11. Light machine oil

APPENDIX IV

PROPERTY BOX CONTENTS

APPENDIX IV PROPERTY BOX CONTENTS

1. Equipment manuals
2. Polyethylene gloves
3. Heat-treated foil
4. Electronic balance
5. Kim Wipes and Scott Towels
6. Masking, fibre, and electrical tape
7. For liquid AOX samples: 10% HNO_3, disposable pipettes, and pH paper
8. For liquid DOC samples: Sartorius vacuum filter flask, Nalgene hand vacuum pump, 47 mm GF/C ash free filters, filter tweezers
9. Waterproof markers (fine and medium)
10. Neeco self-adhesive labels
11. Sediment sample containers for organic analysis; solvent-washed 125 ml Teflon bottles and heat-treated or solvent-washed aluminum cupcake pans
12. Sediment sample containers for metals and/or grain size analysis; whirl pacs of various sizes

APPENDIX V

FIELD SURVEY CHECK LIST

APPENDIX V FIELD SURVEY CHECK LIST

1. Centrifuge sampler - blue/grey shipping container
2. Centrifuge bowl assembly in red metal box
3. Red metal tool box containing bowl wrenches, frequency meter, level, fluorocarbon spray, spare parts, etc.
4. Wooden pallet for centrifuge
5. Honda 5 Kw generator
6. Waterproof tarp to cover generator in rain
7. 4.55 L jerry can for generator gas
8. Tool box
9. Ladder or metal tripod for suspending pump in river
10. Yellow shipping box containing: March submersible pump with screen and fin assembly, 10 lb. (4.5 kg) downrigger balls for pump and connector shackles
11. Yellow shipping box containing: electrical cables, Ground Fault Interrupter, Tygon tube for centrifuge discharge, 2 stainless steel braided hoses to connect centrifuge to pump, flow meter or 2 L flow measuring vessel, rope, gas funnel, etc.
12. Yellow shipping box containing: sample bottles, neoprene sampling gloves
13. Yellow shipping box containing washing equipment
14. Yellow shipping box containing: solvent vats, vapour masks, safety goggles, solvent wash bottles, heat-treated foil, etc.
15. Property box standard contents plus items in Appendix IV
16. Roll of Benchkote
17. Grey shipping box containing: acetone, hexane, dichloromethane (methylene chloride), 4 L Winchester bottles in spill proof containers and waste solvent container(s)
18. Solvent spill kit
19. Distilled water container(s)
20. Large cooler(s) and ice packs for water samples
21. Small cooler(s)

APPENDIX V (CONT'D)

22. Lab Number(s) for water and sediment samples

23. Dry ice container

24. Dry ice for sediment samples - 11 kg block to picked up day before or morning of first day of trip from:
    (**NOTE: they have cost code on file**)
    Ocean Coast Dry Ice Ltd.
    1115 Franklin St.
    Vancouver

25. Personal gear including: chest waders, floater coat/anti-exposure suit/life jacket, warm weather clothing/cold weather clothing, hat, sunglasses, bug repellant

26. Chev 4x4 Crewcab including: 2 sets of keys, VHF radio, tool and safety kit in Tuff Bin

APPENDIX VI

OPERATION LOG

APPENDIX VII

MAINTENANCE LOG
(FROM ALFA-LAVAL
MAINTENANCE REPAIR MANUAL)

PLATES

PLATE 1: Fraser River U/S site at Hansard, B.C.

PLATE 2: Fraser River D/S site at Lillooet, B.C.

PLATE 3: Pulp mill site at Canfor Forest Products in Prince George, B.C.

PLATE 4: Levelling a pallet for centrifuge platform.

PLATE 5: Installing bowl base on centrifuge spindle.

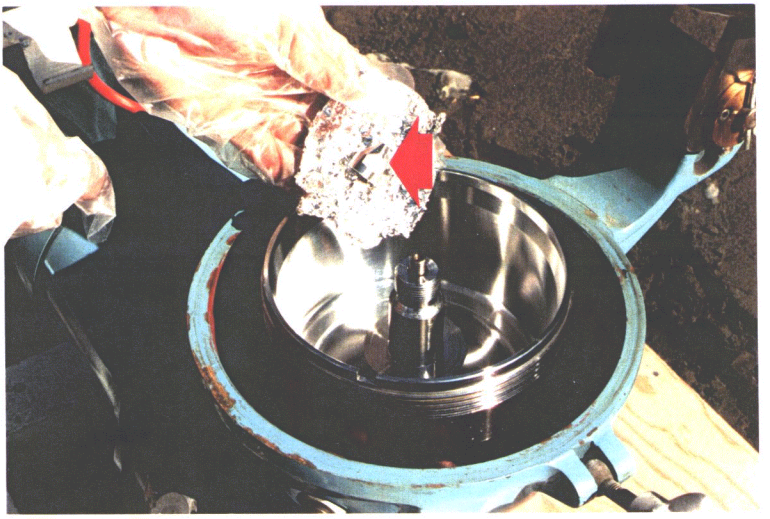

PLATE 6: Removing cap nut from heat-treated foil and installing on threaded spindle.

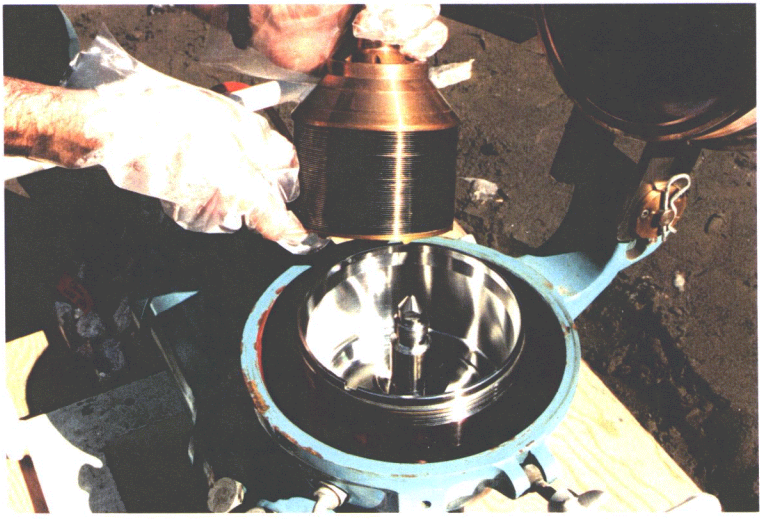

PLATE 7: Reinstalling distributor and dish assembly in bowl base.

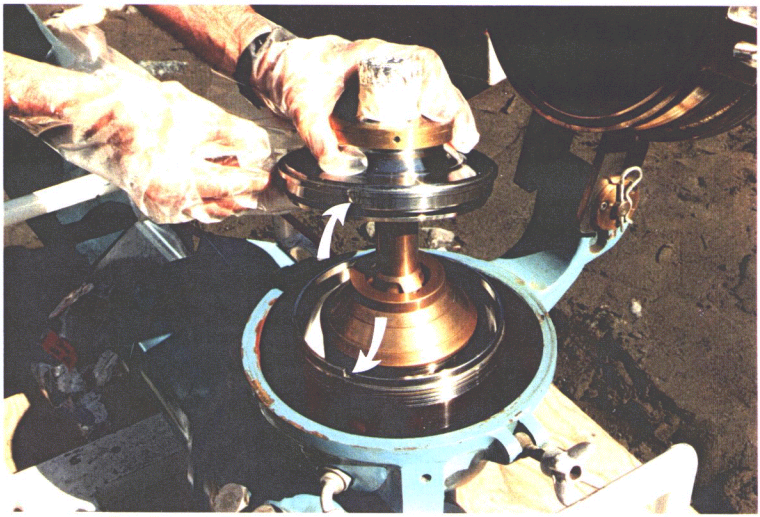

PLATE 8: Installing the bowl hood by lining up key in the hood with key slot in base.

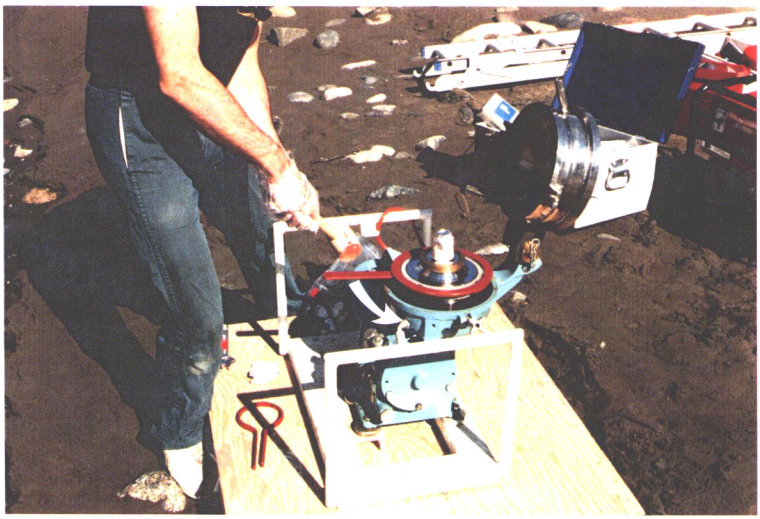

PLATE 9: Tightening the bowl hood lock ring with circular wrench and mallet.

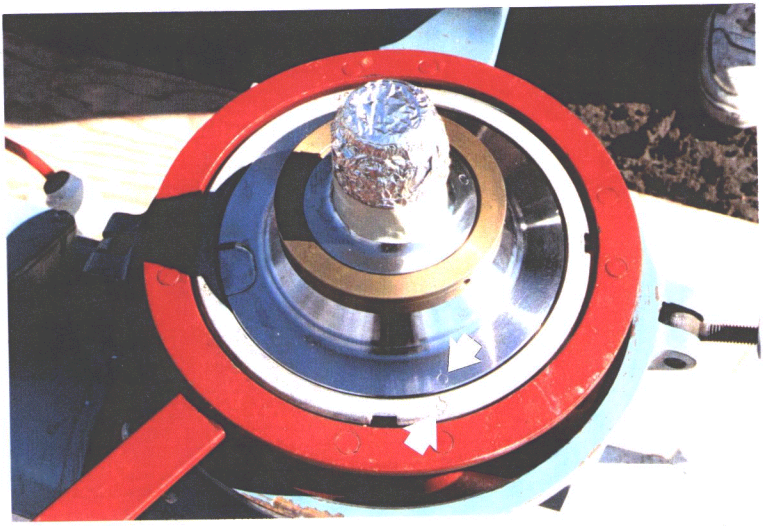

PLATE 10: Lining up circular marks on bowl hood and lock ring.

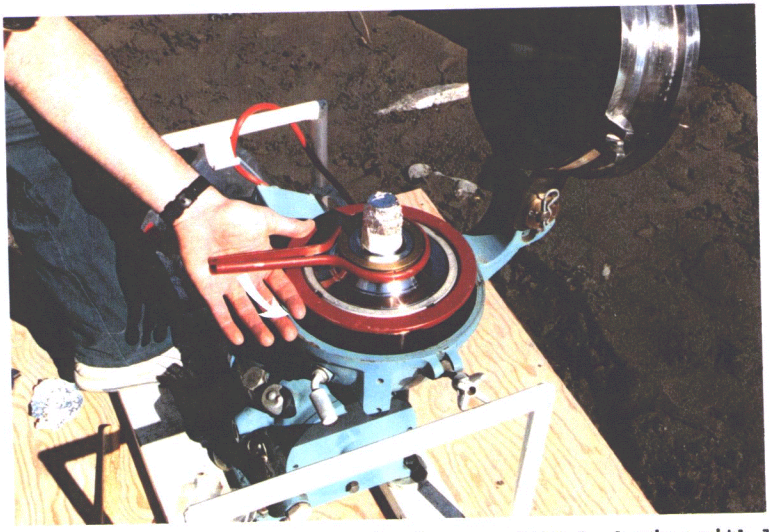

PLATE 11: Tightening the brass discharge collar lock ring with lock ring circular wrench.

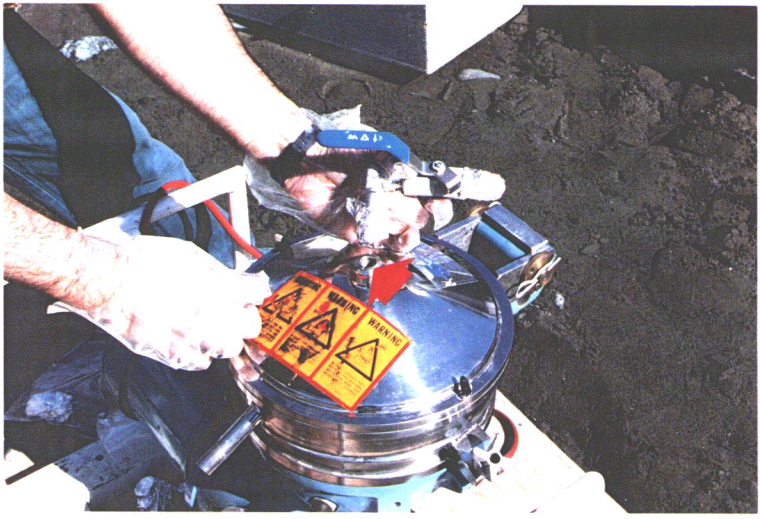

PLATE 12: Installing intake valve assembly to centrifuge cover lid.

PLATE 13: Installing thick-walled Tygon tubing to discharge pipe.

PLATE 14: Covering the generator with waterproof tarp during rainy weather.

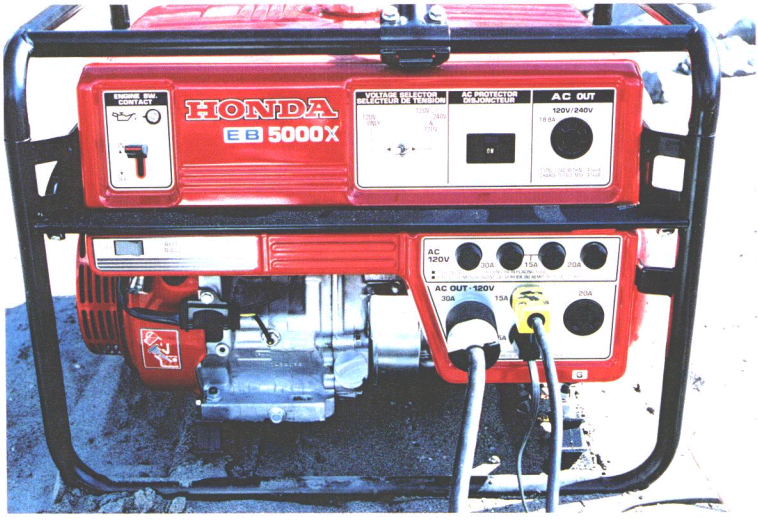

PLATE 15: Generator set-up.

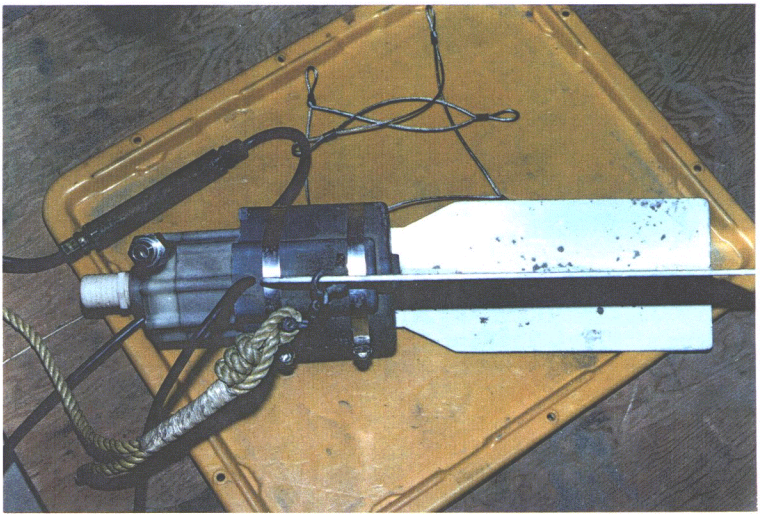

PLATE 16: March pump set-up showing fin assembly, 2 SS screw clamps, poly rope and shackle with taped end, underwater electrical connector, and SS cable harness with premeasured loops.

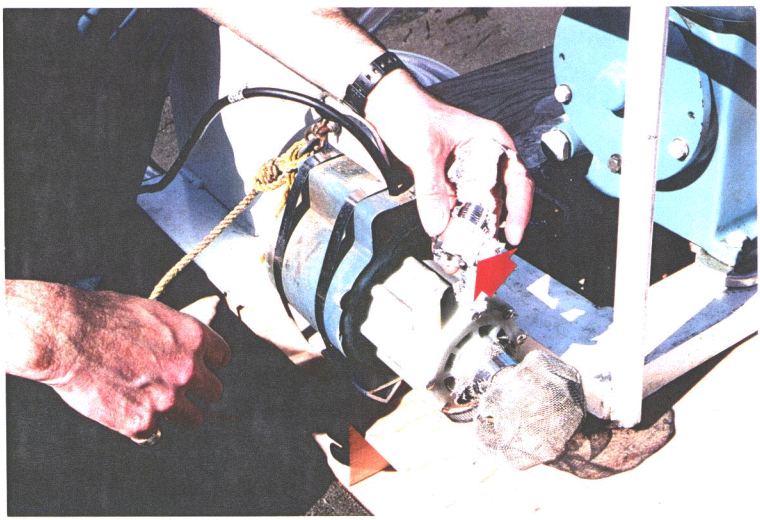

PLATE 17: March pump with SS male solvent-washed connector and wire mesh screen on nylon pump intake tube.

PLATE 18: Connecting SS/Teflon hose to March pump assembly.

PLATE 19: Ladder (tripod) set-up supported by plank connected to shoreline. Hoses and electrical cords run along plank out of water for safety.

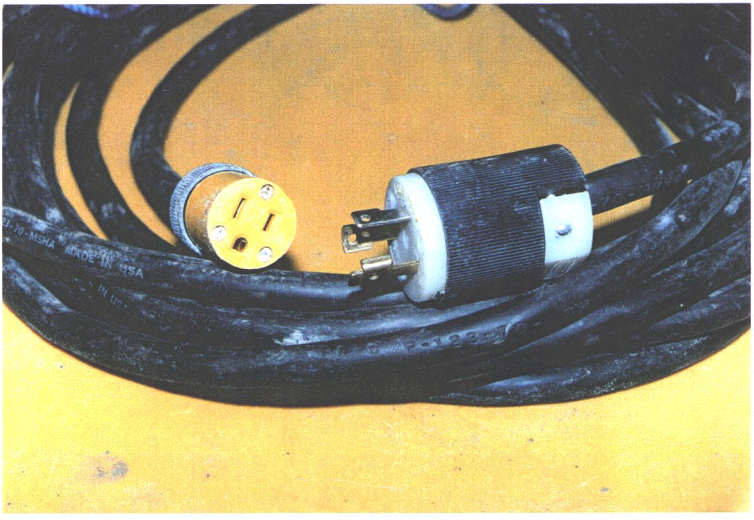

PLATE 20: 120V-30A male plug-in jack and 12-gauge electrical cord.

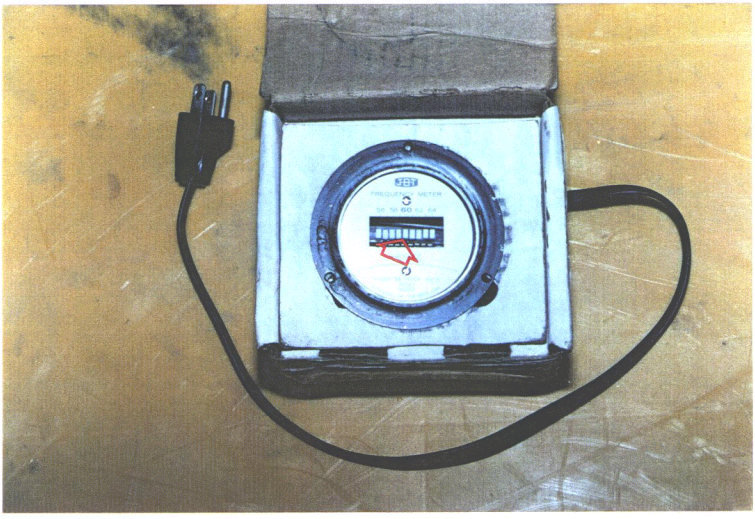

PLATE 21: Frequency meter. The white pegs vibrate vertically when generator is in phase.

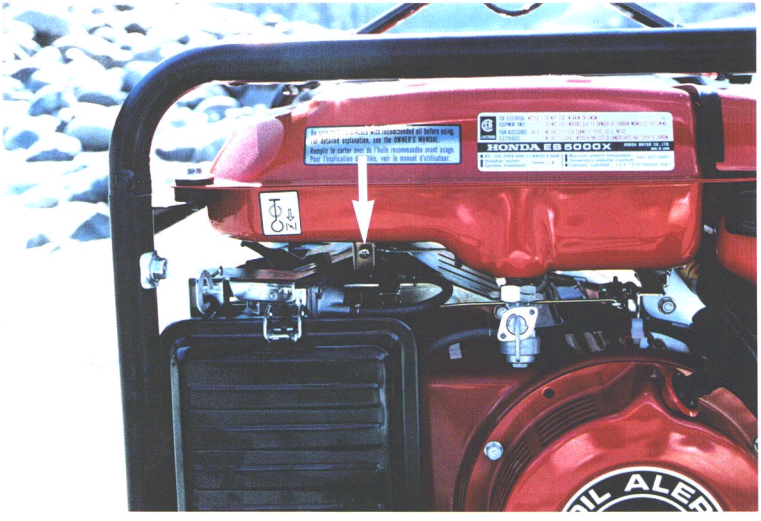

PLATE 22: Motor frequency adjustment screw (Phillips screw driver required).

PLATE 23: Rotator shaft cover with dot to estimate centrifuge RPM.

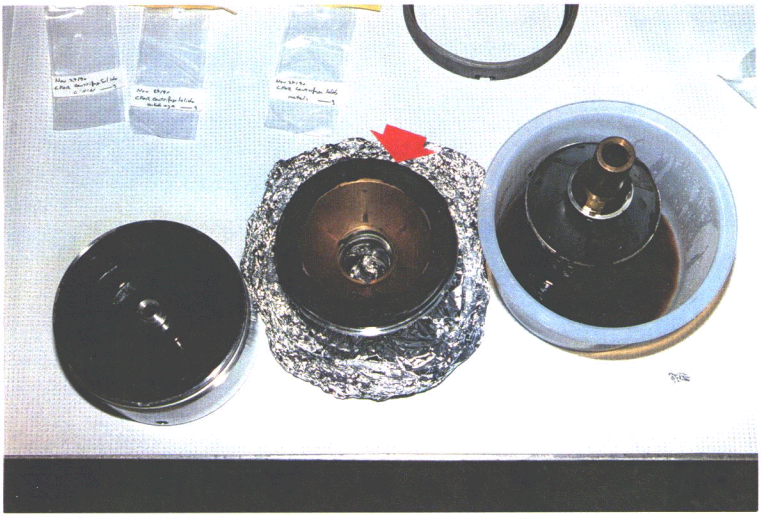

PLATE 24: Inverted bowl hood with sediment cake on rim, distributor assembly in Teflon basin and bowl with sediment sample.

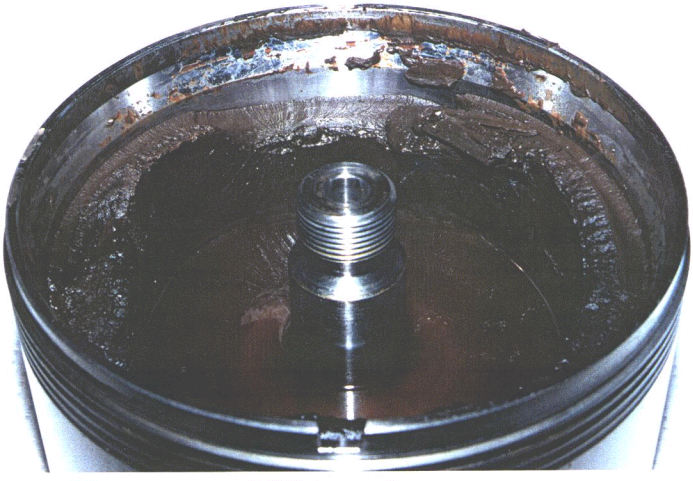

PLATE 25: Close-up of bowl containing liquid to be removed with glass syringe, and sediment cake on bowl inner wall.

PLATE 26: Equipment for sample retrieval including glass 50 mm syringe, Teflon sample bottle for bowl liquid, and Teflon wash bottles in a clean work area.

PLATE 27: Showing extent of sample removal from bowl.

PLATE 28: Fine sediment adhering to discs, from pulp mill sample.

PLATE 29: Solvent washing discs by sequential emersion in SS vats containing acetone, hexane, and dichloromethane.

PLATE 30: Solvent washing bowl parts using Teflon wash bottles, and wearing appropriate safety breathing apparatus when fume hood not available.