Copy No. 2
O.S. Roscoe

SPAR-R.717 **ISSUE** [ ]

A REVIEW OF THE SPACE SHUTTLE STATE-OF-THE-ART AND ITS EFFECT ON OPERATIONAL AND EXPERIMENTAL COMMUNICATIONS SATELLITE PROGRAMMES

SPAR

SPAR-R.717 **ISSUE** [ ]

A REVIEW OF THE SPACE SHUTTLE STATE-OF-THE-ART AND ITS EFFECT ON OPERATIONAL AND EXPERIMENTAL COMMUNICATIONS SATELLITE PROGRAMMES

PREPARED BY Staff

APPROVED BY A.M. Gray
A.M. Gray,
Study Manager

APPROVED BY P.A. McIntyre
for
P.A. McIntyre
Manager, Space Programs

APPROVED BY Howard S Kerr
H.S. Kerr
Technical Director

REASON FOR REISSUE

DATE November, 1975

AMENDMENTS			
NUMBER	REASON FOR AMENDMENT	SIGNATURE	DATE

2/CDR/01

SPAR FORM 22469 A

SPAR aerospace products ltd.
825 Caledonia Rd.
Toronto, Ontario
Canada M6B 3X8

Telephone – (416) 781-1571 Telex – 02-2054 Sparcal Tor TWX – 610-491-1503 Cable – Sparcal Tor

TABLE OF CONTENTS

TABLE OF CONTENTS - Continued

1.0 INTRODUCTION

This report summarizes the work performed by Spar Aerospace Products Ltd. for the Department of Communications (DOC) under contract to the Department of Supply & Services, to evaluate the impact of the Space Transportation System (STS) on future Canadian space programmes.

The contract is entitled "A Review of the Space Shuttle State-of-the-Art and its Effect on Operational and Experimental Communication Satellite Programs". The study schedule is indicated in Figure 1-1, and was departed from slightly in that the second briefing was held on October 31, 1975. A cross reference to the tasks identified in the Statement of Work, July 23, 1975, with the subject index for this report, is presented in the table of contents (page (i)).

Although much information was obtained on the various components of the STS, (which essentially consists of the Space Shuttle plus upper stages) it was readily apparent that numerous policy decisions have yet to be made by NASA, including those that affect the cost and availability of the STS and conventional launch vehicles during the Shuttle era.

However, in the absence of official information on the above, discussions with key personnel of leading U.S. aerospace organizations, engaged in conducting STS planning studies for both NASA and DOD, provided considerable insight into what may be expected as NASA's position on cost and availability of launch systems.

The goals of the present study were such that most of the study effort was directed at reviewing and analyzing existing STS reports in order to brief DOC on the STS and its probable impact on future Canadian space programmes. In the interest of minimizing costs, little original design effort was requested by DOC.

Hence, the information presented in this report draws heavily on the material and findings contained in existing STS documents. In particular, acknowledgement is made to the following documents:

1.1 "The October, 1973 NASA Mission Model Analysis and Economic Assessment". NASA MSFC, January, 1974.

1.2 "572 Flight Traffic Model". NASA, October, 1974.

1.3 "Outside Users Payload Model". Battelle Columbus Laboratories, August, 1975.

1.4 "Space Shuttle". NASA JSC, February, 1975.

1.5 "Space Shuttle Transportation System Handbook". Rockwell International, June, 1974.

1.6 "Space Shuttle System Payload Accommodations". NASA JSC, July, 1974.

1.7 "Summary of Space Tug Program". NASA MSFC, June, 1974.

1.8 "Design of an Astronaut-Controlled Module Exchange Mechanism". Spar Aerospace Products Ltd. September, 1975.

1.9 "Integrated Orbital Servicing Study for Low-Cost Payload Programs". Martin Marietta, August, 1975.

1.10 "Integrated Orbital Servicing and Payload Study". Communications Satellite Corporation, August, 1975.

1.11 "Low Cost Modular Spacecraft Description". NASA GSFC, May, 1975.

ENGINEERING PLAN SCHEDULE SHUTTLE S.T.S. UTILIZATION STUDY

BY: A.M. GRAY DATE: SEPTEMBER 2, 1975 PAGE OF

TASK NO.	TASK DESCRIPTION	AUG. 22	29	SEPT. 5	12	19	26	OCT. 3	10	17	24	31	NOV. 7	14	21	28
A.	SHUTTLE STATE-OF-THE-ART															
(i)	Shuttle System Overview															
(ii)	Shuttle Program Responsibilies															
(iii)	Shuttle Payload Concepts															
(iv)	IUS & TUG Concepts															
(v)	NASA/DOD Shuttle Program Relationships															
(vi)	Bibliography of STS Studies															
(vii)	Standard Launch Vehicle Phase-Out															
B.	SHUTTLE/DOC SPACE PROGRAMS															
(i)	Adaption of Canadian Spacecraft to STS															
(ii)	Launch Costs: STS, Thor Delta															
(iii)	Economics of Servicing Canadian Communications Payloads															
(iv)	Users Viewpoints on Geosynchronous Servicing															
(v)	Servicing - Effect on Spacecraft Structures															
(vi)	Launch Provisions for Canadian Users															
(vii)	Future Studies															
	BRIEFINGS															
	FINAL REPORT															

FORM NO. SPAR 1047

FIG 1-1.

2.0 SHUTTLE SYSTEM OVERVIEW

The initial task of the study was to provide an overview of the Space Shuttle system including a description of the Shuttle, its capability, orbit and planned programme.

However, in order to appreciate the Shuttle system a review is required of the economic analysis that indicated a need for, and finally justify the economic practicality of a reuseable launch system having a return to earth payload capability.

2.1 Economic Analysis and Payload Model

Inputs for the economic analysis of the Space Transportation System (STS) consisted of:

(a) Cost and payload capability of the Shuttle and Tug and of conventional launch vehicles.

(b) Payload model during the proposed Shuttle era (1980 to 1991 time period).

The economic analysis consisted of a determination of the cost of implementing the payload programmes identified in the payload model, utilizing the capabilities of the STS and a comparison with the cost of conducting the same payload effort using expendible launch vehicles.

This capability/"capture" analysis was performed in the following manner. For each calendar year in turn, the Shuttle "capture" analysis selected the payload with the highest energy requirement and assigned it to a Shuttle flight together with its necessary additional propulsion hardware in the form of OMS kits or Tug. Any remaining capability in that Shuttle was filled with the highest energy payload that could be accommodated. This procedure was followed until the capability was smaller than any remaining energy requirement thus completing payload assignment for that Shuttle flight. This process was repeated for other Shuttle flights until payloads for that calendar year were accommodated.

The conventional launch vehicle "capture" analysis essentially used the same techniques, but with nineteen candidate launch vehicles being available (again multiple payload flights assumed).

Following completion of the "capture" exercise for the 1980-1991 time period, the costs of the required Shuttle and conventional launch vehicle flights (plus payloads) were computed.

Factors such as:

- Shuttle return to earth payload capability.
- Low cost payload design features.
- Titan solid rocket motors recovered and reused.
- DOD payloads not combined with non-DOD payloads.
- Launch system reliability.

were factored into the analysis.

The net difference in cost between the two launch systems provided the economic justification for the STS.

The continuing changing payload model will be reviewed in detail in this section as it provides some insight into NASA's anticipated usage of the STS, particularly by commercial communications organizations and by international (non-U.S.) organizations.

The payload model has been defined by NASA as representing a baseline set of possible future payloads which may be used as a reference base for planning purposes.

The payload model still used in part as a base for planning is the "1973 NASA Payload Model" (see Figures 2-1 through 2-9, which identify the payload

distribution by type, user, year of launch and destination).

The purpose of the "1973 NASA Payload Model" was to finalize the economic assessment of the Shuttle. Conclusions of its economic analysis indicated that the identified payloads would amount to 986 discrete Shuttle payloads consisting of both automated (conventional free flying spacecraft) and sortie (Spacelab supported) payloads requiring 725 Shuttle flights. These payloads designed for Shuttle launch were equivalent to 821 discrete payloads requiring 685 expendible launch vehicles (both systems utilizing their respective "best mix" payloads). It was concluded that because of the Shuttle's capability to retrieve and refly refurbished payloads and due to its lower transportation costs per flight, use of the Shuttle resulted in a cost saving of 14.1 billion dollars during the twelve year period. (However, it is obvious that above cost saving is extremely dependent on the validity of STS costs and payload model assumptions.)

In 1974 the STS payload model was updated, considerably reducing the projections for number of Shuttle flights. The "572 Flight Traffic Model" (down from 725) was stated to represent "a more conservative build-up of total STS capability and is consistent with current STS procurement planning" (see Figure 2-10).

The most recent updates to the payload model occurred in 1975 when:

(a) "Preliminary Mission Plan" was generated which covered the first twenty-two operational flights (June, 1980 to December, 1981 time period). This was a slight modification to the 1974 model indicating an additional two Shuttle flights in 1981.

(b) An update to the portion of the 1973 NASA payload model dealing with outside users (i.e., non-NASA, non-DOD) was generated. A

summary of the updated "Outside Users Payload Model" is presented in Figure 2-11. The model is based on two different scenerios, the first assuming a relatively rapid, smooth build-up of foreseeable space programme activity and a second assuming lower programme levels and/or delays in programme initiation as compared to the first. These scenerios lead to the generation of "high" and "low" programme models respectively.

A further update to the above outside users model is in the process of being generated. Canadian inputs to this model were provided at a meeting held at DOC on September 18, 1975. The inputs were provided to Battelle Columbus Labs, who were performing the update for NASA.

NASA PAYLOAD MODEL COMPARISON (1980-1991)

	1971 Model	Oct. 1973 Model
Explorer Class	88	86
Science	(60)	(34)
Applications	(28)	(28)
Life Sciences	(0)	(24)
Intermediate Class	115	91
Science	(12)	(16)
Applications	(84)	(28)
Planetary	(19)	(41)[b]
Life Sciences	(0)	(0)
Space Technology	(0)	(6)
Large Observatories	71	44
Spacecraft	(9)	(13)
Revisits	(62)	(31)
Sorties	97[a]	286
Science	(48)	(110)
Applications	(31)	(59)
Life Sciences	(5)	(28)
Space Processing	(7)	(43)
Space Technology	(6)	(46)
Space Station	53	0
Station Modules	(14)	
Logistics	(33)	
Lab Modules	(6)	
Total NASA	327	507
DoD March 1971 "B" Model	281	304
Non-NASA	128	175
Spacecraft	(128)	(125)
Sorties	(0)	(50)
Total Gross Model	736	986

a. Not included in the cost benefit analysis.
b. Includes seven automated Lunar missions.

FIG. 2-1
(REF. 1.1 PAGE 13)

PAYLOAD TRAFFIC SUMMARY FOR AUTOMATED SPACECRAFT

NASA	1980	1981	1982	1983	1984	1985	1986	1987	1988	1989	1990	1991	TOTAL
ASTRONOMY	5	2	4	5	4	7	6	7	5	6	5	6	62
PHYSICS	2	3	1	2	3	1	2	3	4	3	4	4	32
PLANETARY	2	7	0	3	4	5	5	2	0	2	2	2	34
LUNAR	0	0	0	0	1	0	1	1	1	1	1	1	7
EARTH OBSERVATIONS	3	4	3	3	2	4	2	6	2	4	2	4	39
EARTH AND OCEAN PHYSICS	2	4	2	0	0	1	4	0	0	0	4	0	17
COMMUNICATIONS / NAVIGATION	0	0	0	0	0	0	0	0	0	0	0	0	0
LIFE SCIENCES	2	2	2	2	2	2	2	2	2	2	2	2	24
SPACE PROCESSING	0	0	0	0	0	0	0	0	0	0	0	0	0
SPACE TECHNOLOGY	1	0	1	0	1	0	1	0	1	0	1	0	6
TOTAL NASA	17	22	13	15	17	20	23	21	15	18	21	19	221
NON-NASA – NON-DOD													
COMMUNICATIONS / NAVIGATION	6	6	5	8	6	6	6	3	9	5	9	4	73
EARTH OBSERVATIONS	2	4	4	2	2	3	3	3	7	4	5	4	43
EARTH AND OCEAN PHYSICS	0	0	0	0	0	0	3	0	3	0	3	0	9
TOTAL NON NASA	8	10	9	10	8	9	12	6	19	9	17	8	125
TOTAL DOD	34	18	21	32	28	25	23	25	25	25	26	22	304
TOTAL AUTOMATED S / C	59	50	43	57	53	54	58	52	59	52	64	49	650

FIG 2-2. (REF 11 PAGE 14)

PAYLOAD TRAFFIC SUMMARY FOR
AUTOMATED SPACECRAFT PLUS SORTIES

	80	81	82	83	84	85	86	87	88	89	90	91	TOTAL
NASA AUTOMATED	17	22	13	15	17	20	23	21	15	18	21	19	221
NASA SORTIE	11	17	21	22	25	27	28	26	28	27	27	27	286
NASA TOTAL	28	39	34	37	42	47	51	47	43	45	48	46	507
NON-NASA AUTOMATED	8	10	9	10	8	9	12	6	19	9	17	8	125
NON-NASA SORTIE	2	3	3	4	3	5	5	5	5	5	5	5	50
NON-NASA TOTAL	10	13	12	14	11	14	17	11	24	14	22	13	175
DOD	34	18	21	32	28	25	23	25	25	25	26	22	304
SUM TOTAL	72	70	67	83	81	86	91	83	92	84	96	81	986

Fig 2-3
(Page 1.1 Page 16)

PAYLOAD FLIGHT SCHEDULE FOR COMMUNICATIONS AND NAVIGATION PROGRAM (C/N)

Payload Code	Payload	CY 73	74	75	76	77	78	79	80	81	82	83	84	85	86	87	88	89	90	91	Total
	Automated Spacecraft																				
C/N-1	Applic. Tech. Sat.		1																		1
C/N-2	Coop. Applic. Sat.			1																	1
	Total		1	1							0		0		0	0					2
	Sortie Payloads																				
CN/3	(Antenna Configurations Laser Technology, Traffic Management Techniques, Energy Transfer Experiment)									1	1	1	1	1	1	1	1	1	1	1	11

Fig 2-4. (Ref 1.1 page 23)

PAYLOAD FLIGHT SCHEDULE FOR NON-NASA/NON-DOD PAYLOADS (NN/D)

Payload Code	Payload	CY	73	74	75	76	77	78	79	80	81	82	83	84	85	86	87	88	89	90	91	Total
	Comm/Nav																					
NN/D-1	International Comm.		3	1	2	1	1	1	2	3			2	3	2	2			2	3	2	30
NN/D-2	U.S. Domestic			7	3	1	1	4	1	1	2	2	4	1	1	2	2	6	2	2	1	43
NN/D-3	Disaster Warning										1	1			1					1		4
NN/D-4	Traffic Management					2	1	3	1	2	2	1	1	1		1		1		1		17
NN/D-5	Foreign Comm.		2	1	3	2	3	1			1	1	1	1	1	1	1	1	1	1	1	23
NN/D-6	Communication R&D/Prototype														1			1		1		3
	Earth Observations																					
NN/D-7	Tiros Operational Sat.		1	1	1	1	1	1	1													7
NN/D-8	Environ. Monitoring Sat.									1	1	1			1	1	1	1		1	1	9
NN/D-9	Foreign Syn. Met. Sat. (2 Systems)							1			1	1		1		1		1		1		7
NN/D-10	Geosyn. Oper. Environmental Sat.				1	1	1	1	1		1	1	1		1		1	1	1		1	13
	Earth Resources Sat.																					
NN/D-11	Low Earth Orbit (2 Systems)						1	1	1	1	1	1	1	1	1	1	1	1	1	1	1	15
NN/D-12	Geosynchronous																	2		2		4
NN/D-13	Foreign Syn. Earth Obs. Sat.																	1	2		1	4
	Earth and Ocean Physics																					
NN/D-14	Global Earth & Ocean Monit. Sys.															3		3		3		9
	Total Autom.		6	10	10	8	9	13	7	8	10	9	10	8	9	12	6	19	9	17	8	188
	Sortie Payloads																					
NN/D-15	Space Manufacturing														1	2	1	2	1	2	1	10
NN/D-16	Foreign Sortie									2	3	3	4	3	4	3	4	3	4	3	4	40

FIG 2-5 (REF 1.1 PAGE 25)

SHUTTLE AND TUG TRAFFIC SUMMARY

PROGRAM	YEAR												
	1980	1981	1982	1983	1984	1985	1986	1987	1988	1989	1990	1991	TOTAL
NASA & NON-NASA													
SHUTTLE FLIGHTS													
KSC	14	32	27	34	35	42	42	37	39	33	42	39	416
WTR			1	7	10	9	10	8	9	11	11	9	85
TOTAL	14	32	28	41	45	51	52	45	48	44	53	48	501
TUG FLIGHTS													
KSC		12	5	13	14	15	17	12	12	11	14	11	136
WTR					4	1	1	2	2	2	2	2	16
TOTAL		12	5	13	18	16	18	14	14	13	16	13	152
DOD													
SHUTTLE FLIGHTS													
KSC		2	9	11	15	6	9	10	11	6	13	8	100
WTR				16	13	17	12	14	11	15	11	15	124
TOTAL		2	9	27	28	23	21	24	22	21	24	23	224
TUG FLIGHTS													
KSC		2	9	11	15	6	9	10	11	6	13	6	98
WTR				6	4	5	4	4	3	5	3	5	39
TOTAL		2	9	17	19	11	13	14	14	11	16	11	137
SUBTOTAL													
SHUTTLE FLIGHTS	14	34	37	68	73	74	73	69	70	65	77	71	725
TUG FLIGHTS		14	14	30	37	27	31	28	28	24	32	24	289
ABORT FLIGHTS													
SHUTTLE		2	3	5	6	6	6	6	6	5	6	6	57
TUG		1	1	3	4	2	3	2	2	2	3	2	25
TOTAL													
SHUTTLE FLIGHTS	14	36	40	73	79	80	79	75	76	70	83	77	782
TUG FLIGHTS		15	15	33	41	29	34	30	30	26	35	26	314

(Ref Fig 2-6 1,1 Page 61)

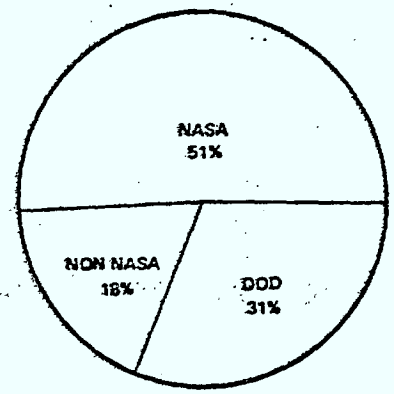

PAYLOADS DISTRIBUTION BY USER

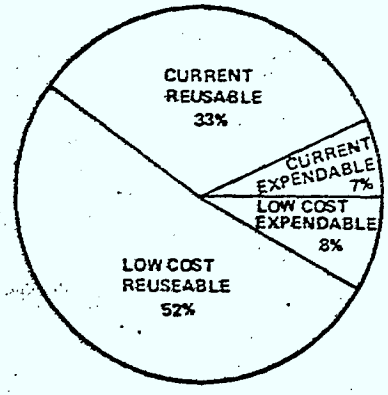

PAYLOAD DESIGN TYPE

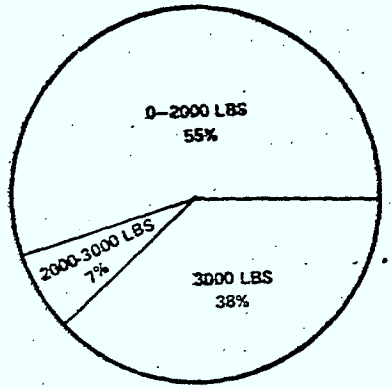

PAYLOAD WEIGHT CLASS
(ONLY SYNCH MISSIONS)

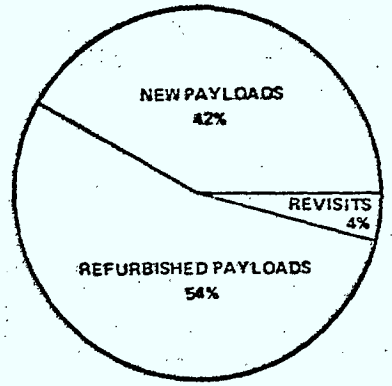

PAYLOAD REUSE

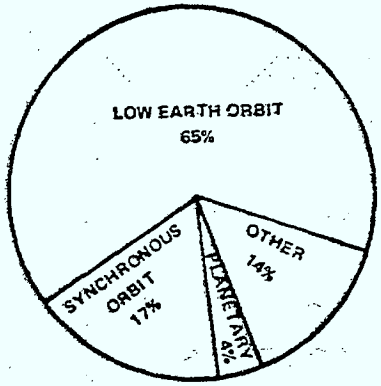

MISSION DESTINATION

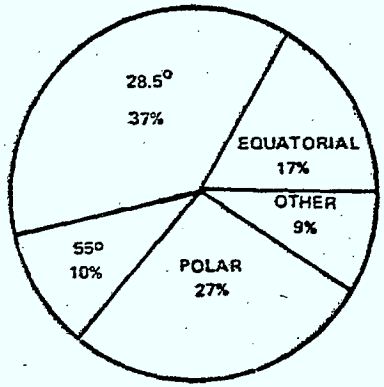

ORBIT INCLINATION

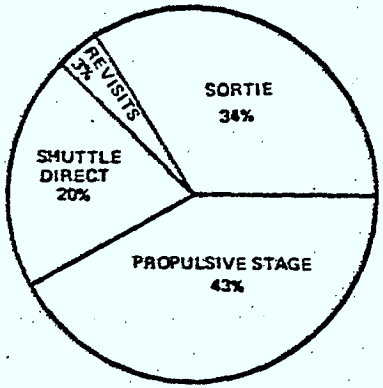

MISSION MODE

1973 best mix payload summary (986 payloads).

Fig 2-7.
(Rep 1.1 Page 63)

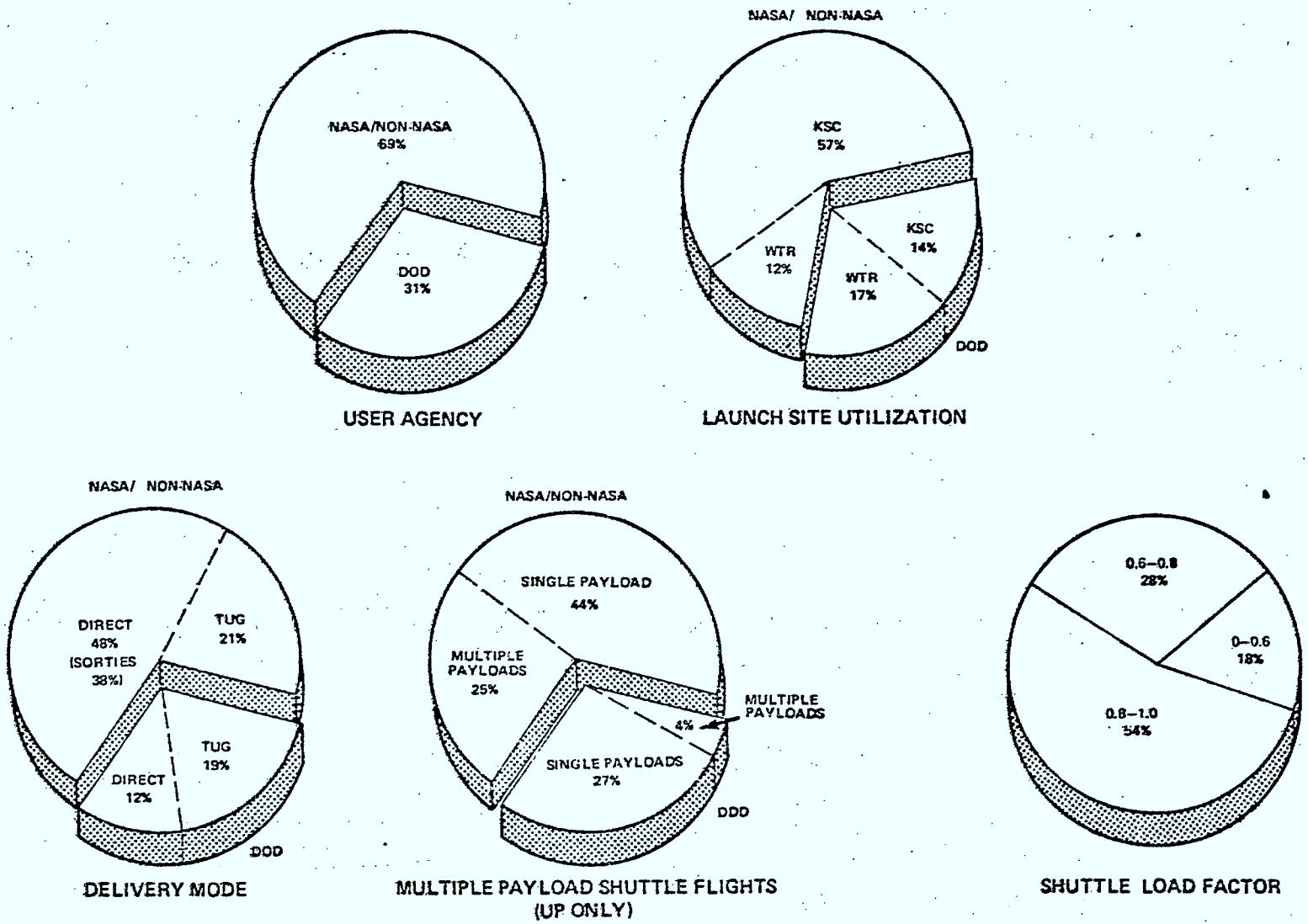

1973 Shuttle traffic summary (725 flights).

Fig 2-8
(Ref 1.1 Page 6.4)

SHUTTLE LAUNCHED PAYLOAD
TRAFFIC SUMMARY BEST MIX OF PAYLOADS NASA, NON-NASA & DOD

MODE OF OPERATION	YEAR 80	81	82	83	84	85	86	87	88	89	90	91	TOTAL
SORTIES	13	20	24	26	28	32	33	31	33	32	32	32	336
REVISITS	0	1	2	1	5	4	2	6	4	6	7	6	44
LAUNCH NEW	4	20	19	49	22	28	26	21	25	17	18	18	267
LAUNCH REFURBISHED	3	3	5	7	26	22	30	25	30	29	39	25	244
LAUNCH NEW ON EXP. LAUNCH VEHICLES	52	26	17										95
TOTAL UP PAYLOAD TRAFFIC	72	70	67	83	81	86	91	83	92	84	96	81	986
RETRIEVALS	5	5	7	18	42	24	30	29	31	30	29	25	275

EXPENDABLE VEHICLE LAUNCHED PAYLOAD TRAFFIC SUMMARY

MODE OF OPERATION	YEAR 80	81	82	83	84	85	86	87	88	89	90	91	TOTAL
LAUNCH NEW	78	59	57	68	70	72	76	66	72	63	82	58	821

(Ref Fig 2-9 1.1 Page 65)

572 FLIGHT TRAFFIC MODEL

20 SEP 1974

CY	78	79	80	81	82	83	84	85	86	87	88	89	90	91	TOTAL	PEAK
SHUTTLE DDT&E		3	3												6	
SHUTTLE OPERATIONS			5	15	24	48	60	60	60	60	60	60	60	60	572	60
SPACELAB OPERATIONS*			2	6	12	17	19	21	21	24	24	24	27	29	226	29
IUS/TUG OPERATIONS*			3	8	12	15	17	22	21	21	20	19	20	19	197	22
SHUTTLE KSC																
NASA & OTHER CIVIL		3**	5**	10	18	31	33	32	33	33	34	33	32	32	329	34
DOD			3	5	5	5	7	8	7	7	6	7	8	8	76	8
KSC TOTAL		3	8	15	23	36	40	40	40	40	40	40	40	40	405	40
SHUTTLE VAFB																
NASA & OTHER CIVIL					1	4	11	11	11	11	11	11	11	11	93	11
DOD						8	9	9	9	9	9	9	9	9	80	9
VAFB TOTAL					1	12	20	20	20	20	20	20	20	20	173	20
30-DAY MISSIONS***						2	2	2	3	4	6	5	6	6	36	6

* INCLUDES INITIAL QUALIFICATION (DEVELOPMENT) FLIGHTS.

** DEVELOPMENT FLIGHTS (3 OF 5 FLIGHTS IN 1980 ARE DEVELOPMENT FLIGHTS).

*** OF THE 226 SPACELAB FLIGHTS, 36 ARE ASSUMED TO BE 30-DAY MISSIONS--
2 FROM VAFB AND 34 FROM KSC.

FIG 2-10 (PAGE 1.2 PAGE 3)

'UPDATED OUTSIDE USERS MODEL'

HIGH MODEL

	YEAR																	TOTAL
	75	76	77	78	79	80	81	82	83	84	85	86	87	88	89	90	91	
U.S. COMMERCIAL	8	8	3	5	6	6	4	5	11	10	16	19	15	19	14	27	18	194
FOREIGN COMMERCIAL	-	-	-	-	-	-	-	-	-	-	2	3	4	5	5	5	5	29
FOREIGN GOVERNMENT	2	1	5	7	1	3	7	4	8	12	12	6	7	8	11	10	13	117
OTHER U.S. GOVERNMENT AGENCIES	3	5	4	7	4	4	4	3	3	6	9	8	2	4	4	8	6	84
TOTAL	13	14	12	19	11	13	15	12	22	28	39	36	28	36	34	50	42	424

LOW MODEL

U.S. COMMERCIAL	8	8	3	3	5	2	4	4	5	4	1	1	8	7	11	6	8	88
FOREIGN COMMERCIAL	-	-	-	-	-	-	-	-	-	-	-	-	-	-	1	1	1	3
FOREIGN GOVERNMENT	2	1	1	5	-	-	1	3	4	5	6	7	6	8	6	9	7	75
OTHER U.S. GOVERNMET AGENCIES	3	5	3	6	3	3	1	1	2	2	5	-	1	1	1	2	1	40
TOTAL	13	14	7	14	8	5	6	9	11	11	12	8	15	16	19	18	17	206

FIG 2-11 (REF 1.3 PAGE 22)

2.2 Shuttle System Description

The Space Shuttle is designed to reduce the cost and increase the effectiveness of using space for commercial, scientific and defence needs by its ability to inexpensively transport a variety of payloads to orbit.

The primary mission for the Space Shuttle is the delivery of payloads to earth orbit. It has a capability to place payloads of 65,000 pounds into low earth orbit. Payloads with propulsion stages can place spacecraft into high earth or into lunar or planetary trajectories.

In addition, the Oribter has the capability to carry out missions unique to the space programme: to retrieve payloads from orbit for reuse; to service or refurbish spacecraft in space; and to operate space laboratories in orbit. These capabilities result in a net saving in the cost of space operations while greatly enhancing the flexibility and productivity of the missions.

A description of the Shuttle system, its mission profile and main components are presented in Figures 2-12 through 2-23.

SPACE SHUTTLE SYSTEM AND MISSION PROFILE

The Space Shuttle flight system is composed of the Orbiter, an external tank (ET) that contains the ascent propellant to be used by the Orbiter main engines, and two solid rocket boosters (SRB's). The Orbiter and SRB's are reusable; the external tank is expended on each launch.

The Space Shuttle mission begins with the installation of the mission payload into the Orbiter payload bay. The payload will be checked and serviced before installation and will be activated on orbit. Flight safety items for some payloads will be monitored by a caution and warning system.

The SRB's and the Orbiter main engine will fire in parallel at lift-off. The two SRB's are jettisoned after burnout and are recovered by means of a parachute system. The large external tank is jettisoned before the Space Shuttle Orbiter goes into orbit. The orbital maneuvering system (OMS) of the Orbiter is used to attain the desired orbit and to make any subsequent maneuvers that may be required during the mission. When the payload bay doors in the top of the Orbiter fuselage open to expose the payload, the crewmen are ready to begin payload operations.

After the orbital operations, deorbiting maneuvers are initiated. Reentry is made into the Earth atmosphere at a high angle of attack. At low altitude, the Orbiter goes into horizontal flight for an aircraft-type approach and landing. A 2-week ground turnaround is the goal for reuse of the Space Shuttle Orbiter.

The nominal design duration of the initial missions is 7 days. The mission duration can be extended to as long as 30 days if the necessary consumables are added.

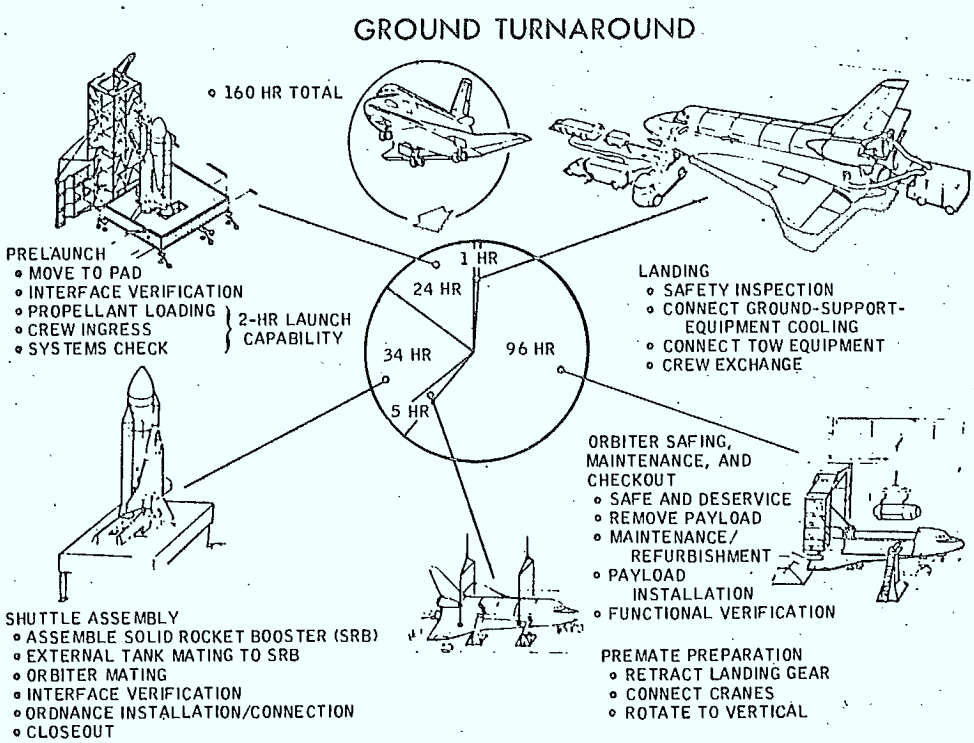

FIG 2-12
(REF 1.4 PAGE 3)

PROFILE OF SHUTTLE MISSION

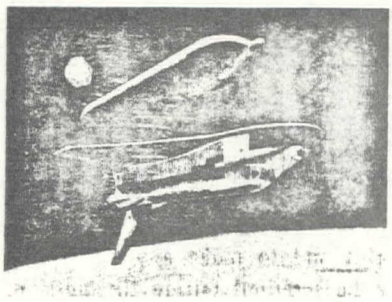

SEPARATION OF EXTERNAL TANK

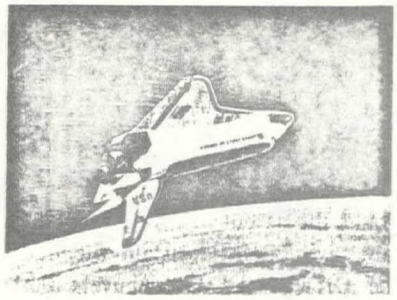

ORBIT INSERTION AND CIRCULARIZATION

HEIGHT:
215 km (115 N. MI. - TYPICAL)
VELOCITY:
28 300 km/HR (17 600 MPH)

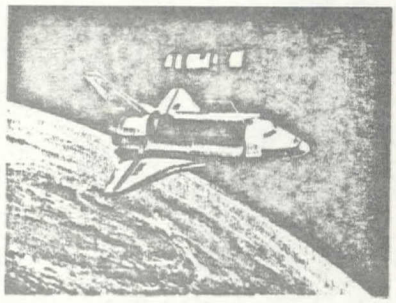

ORBITAL OPERATIONS

HEIGHT:
185 TO 1100 km
(100 TO 600 N. MI.)
DURATION:
UP TO 30 DAYS

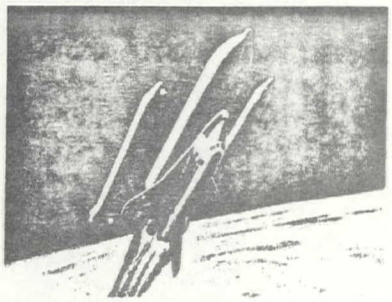

SEPARATION OF SOLID ROCKET BOOSTERS

HEIGHT:
50 km (27 N. MI.)
VELOCITY:
5170 km/HR (3213 MPH)

SHUTTLE CHARACTERISTICS

(VALUES ARE APPROXIMATE)

LENGTH

SYSTEM: 56 m (184 FT)
ORBITER: 37 m (122 FT)

HEIGHT

SYSTEM: 23 m (76 FT)
ORBITER: 17 m (57 FT)

WINGSPAN

ORBITER: 24 m (78 FT)

WEIGHT

GROSS LIFT-OFF:
2 000 000 kg (4 400 000 LB)
ORBITER LANDING:
85 000 kg (187 000 LB)

THRUST

SOLID ROCKET BOOSTERS (2):
11 800 000 N (2 650 000 LB)
OF THRUST EACH
ORBITER MAIN ENGINES (3):
2 100 000 N (470 000 LB)
OF THRUST EACH

CARGO BAY

DIMENSIONS:
18 m (60 FT) LONG, 5 m (15 FT)
IN DIAMETER
ACCOMMODATIONS:
UNMANNED SPACECRAFT TO
FULLY EQUIPPED SCIENTIFIC
LABORATORIES

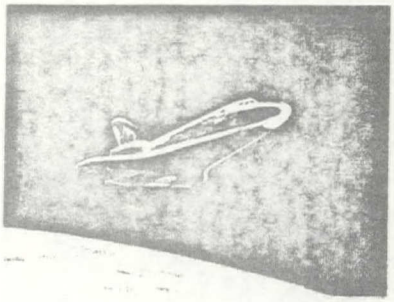

ATMOSPHERIC ENTRY

HEIGHT:
140 km (76 N. MI)
VELOCITY:
28 100 km/HR (17 500 MPH)

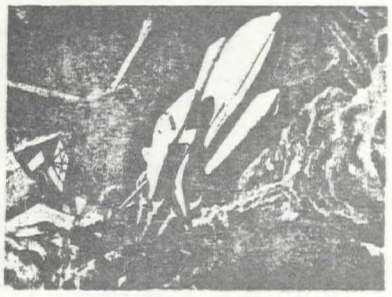

SHUTTLE LAUNCH

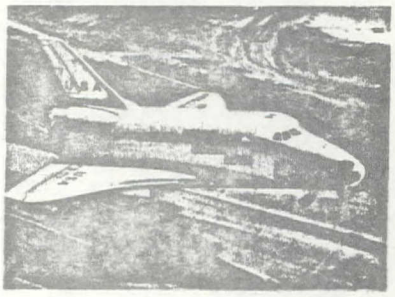

LANDING

CROSSRANGE:
±2000 km (±1085 N. MI.)
VELOCITY:
346 km/HR (215 MPH)
(FROM ENTRY PATH)

FIG 2-13
(REF 1.4 PAGE 4)

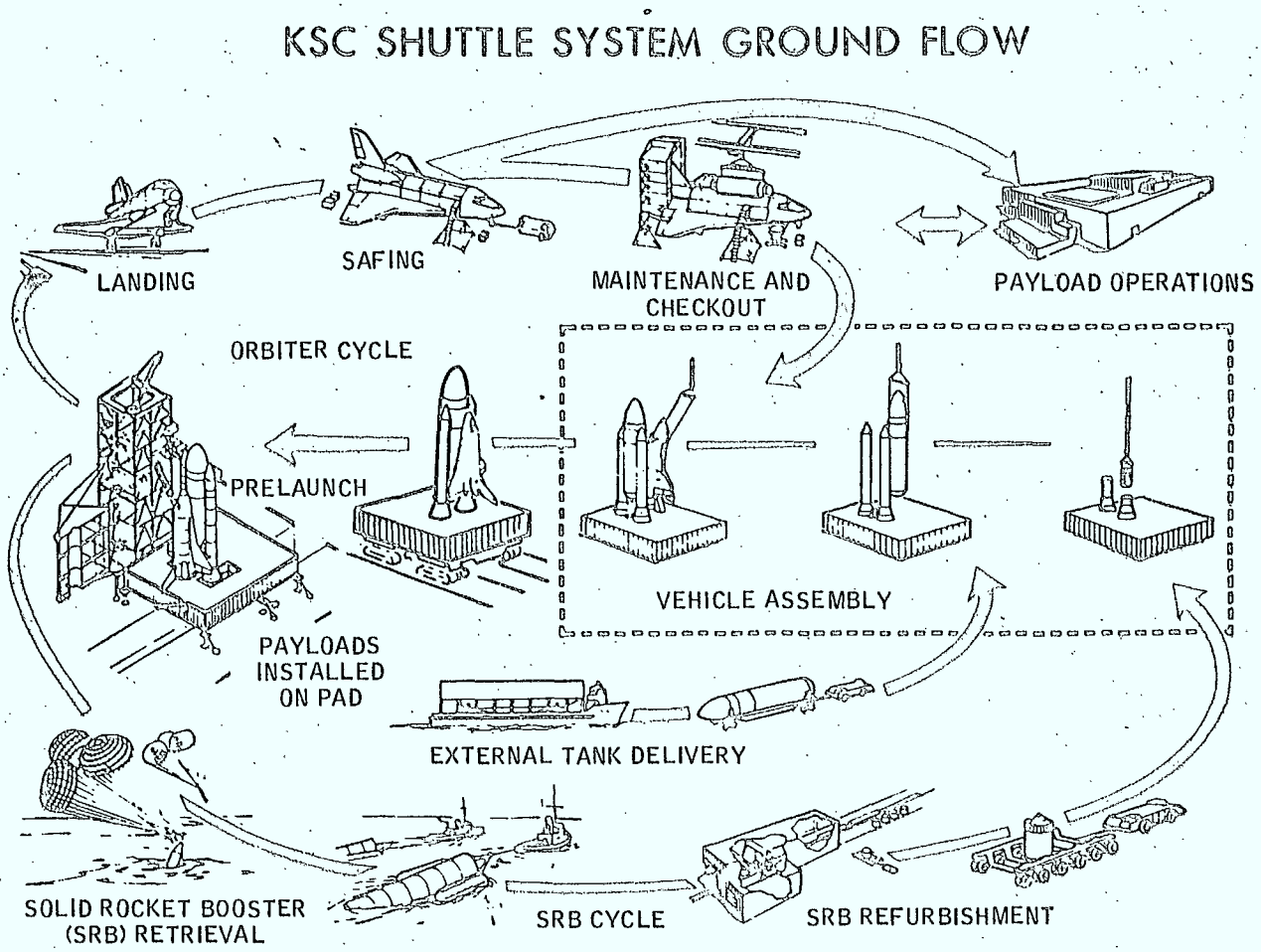

SPACE SHUTTLE LAUNCH SITES, OPERATIONAL DATES, AND INCLINATION LIMITS

Space Shuttle flights will be launched from two locations, the NASA John F. Kennedy Space Center (KSC) in Florida and the Vandenberg Air Force Base (VAFB) in California. Present program planning calls for a gradual buildup of 40 to 60 total flights per year into many varying orbits and inclinations.

To attain operational status by 1980, Space Shuttle orbital test flights are scheduled to begin from KSC during 1979; VAFB is planned to be available in the early 1980's. The various orbital inclinations and their related launch azimuths are illustrated for each site. Together, these capabilities satisfy all known future requirements. Payloads as large as 29 500 kilograms (65 000 pounds) can be launched due east from KSC into an orbit of 28.5° inclination. Payloads of 14 500 kilograms (32 000 pounds) can be launched from VAFB into the highest inclination orbit of 104°. Polar orbiting capabilities up to 18 000 kilograms (40 000 pounds) can be achieved from VAFB.

Fig 2-14
(Rev 1.4 Page 60)

SPACE SHUTTLE VEHICLE

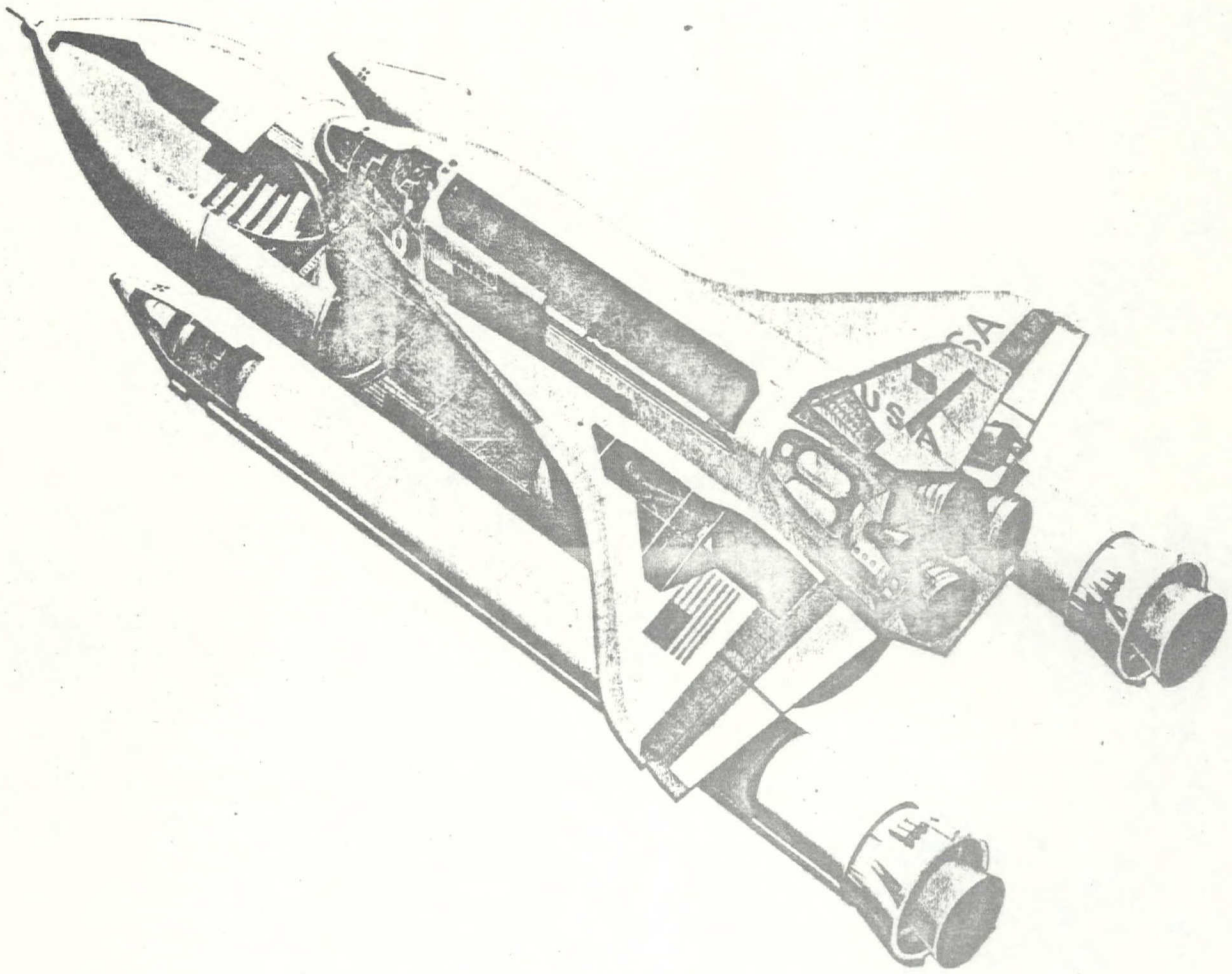

The Orbiter is designed to carry into orbit a crew of seven (the current baseline calls for four), including scientific and technical personnel, and the payloads. The rest of the Shuttle system (SRB's and external fuel tank) is required to boost the Orbiter into space. The smaller Orbiter rocket engines provide maneuvering and control during space flight; during atmospheric flight, the Orbiter is controlled by the aerodynamic surfaces on the wings and by the vertical stabilizer.

On a standard mission, the Orbiter can remain in orbit for 7 days, return to Earth with personnel and payload, land like an airplane, and be readied for another flight in 14 days. The Shuttle can be readied for a rescue mission launch from standby status within 24 hours after notification. For emergency rescue, the cabin can accommodate as many as 10 persons; thus, all occupants of a disabled Orbiter could be rescued by another Shuttle.

The SRB's, which burn in parallel with the Orbiter main propulsion system, are separated from the Orbiter/external tank at an altitude of approximately 50 kilometers (27 nautical miles), descend on parachutes, and land in the ocean approximately 278 000 meters (150 nautical miles) from the launch site. They are recovered by ships, returned to land, refurbished, and then reused.

After SRB separation, the Orbiter main propulsion system continues to burn until the Orbiter is injected into the required ascent trajectory. The external tank then separates and falls ballistically into a remote area of the Indian or the South Pacific Ocean, depending on the launch site and mission. The OMS completes insertion of the Orbiter into the desired orbit.

FIG 2-15
(REF 1.4 PAGE 5)

SPACE SHUTTLE VEHICLE

SPACE SHUTTLE ORBITER

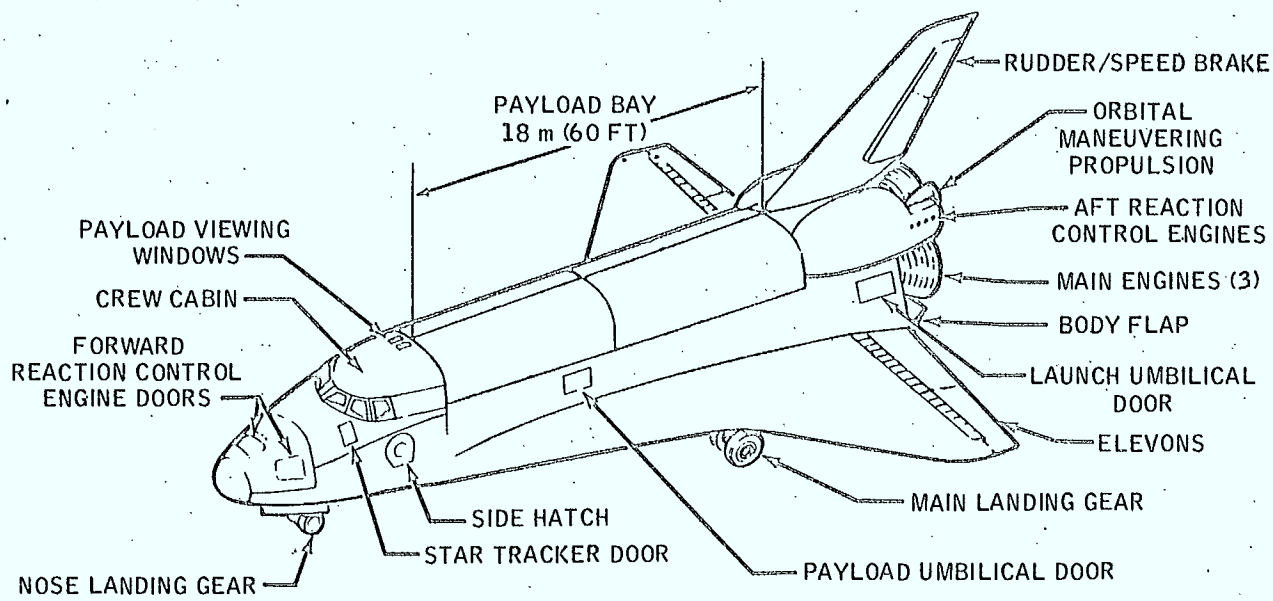

The Orbiter spacecraft contains the crew and payload for the Space Shuttle system. The Orbiter can deliver to orbit payloads of 29 500 kilograms (65 000 pounds) with lengths to 18 meters (60 feet) and diameters of 5 meters (15 feet). The Orbiter is comparable in size and weight to modern transport aircraft; it has a dry weight of approximately 68 000 kilograms (150 000 pounds), a length of 37 meters (122 feet), and a wingspan of 24 meters (78 feet).

The crew compartment can accommodate seven crewmembers and passengers for some missions (four is the baseline) but will hold as many as 10 persons in emergency operations.

The three main propulsion rocket engines used during launch are contained in the aft fuselage. The rocket engine propellant is contained in the external tank (ET), which is jettisoned before initial orbit insertion. The orbital maneuvering subsystem (OMS) is contained in two external pods on the aft fuselage. These units provide thrust for orbit insertion, orbit change, rendezvous, and return to Earth. The reaction control subsystem (RCS) is contained in the two OMS pods and in a module in the nose section of the forward fuselage. These units provide attitude control in space and precision velocity changes for the final phases of rendezvous and docking or orbit modification. In addition, the RCS, in conjunction with the Orbiter aerodynamic control surfaces, provides attitude control during reentry. The aerodynamic control surfaces provide control of the Orbiter at speeds less than Mach 5. The Orbiter is designed to land at a speed of 95 m/sec (185 knots), similar to current high-performance aircraft.

Fig 2-16
(Ref 1-4 Page 38)

EXTERNAL TANK

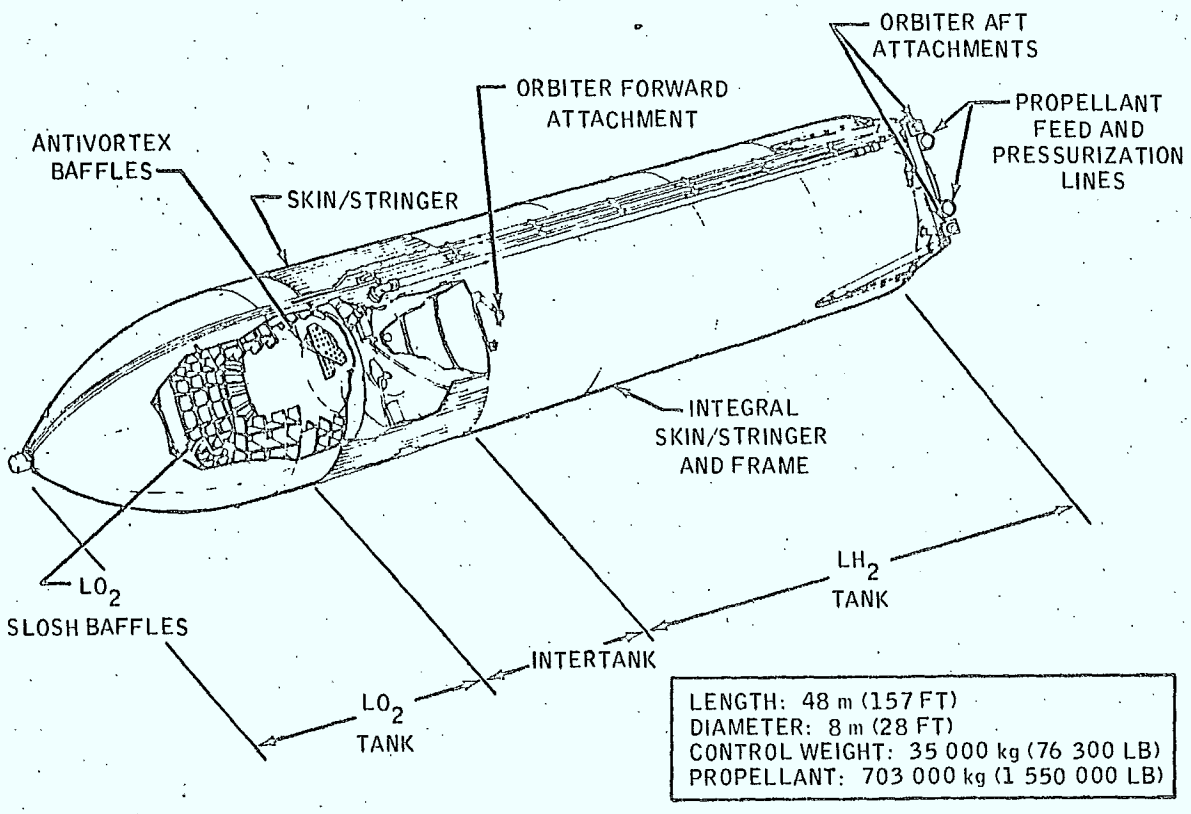

The external tank contains the propellants for the Orbiter main engines: liquid hydrogen (LH_2) fuel and liquid oxygen (LO_2) oxidizer. All fluid controls and valves (except the vent valves) for operation of the main propulsion system are located in the Orbiter to minimize throwaway costs. Antivortex and slosh baffles are mounted in the oxidizer tank to minimize liquid residuals and to damp fluid motion. Five lines (three for fuel and two for oxidizer) interface between the external tank and the Orbiter. All are insulated except the oxidizer pressurization line. An antigeyser line on the external tank provides LO_2 geyser suppression. Liquid-level point sensors are used in both tanks for loading control.

At lift-off, the external tank contains 703 000 kilograms (1 550 000 pounds) of usable propellant. The LH_2 tank volume is 1523 m^3 (53 800 ft^3) and the LO_2 tank volume is 552 m^3 (19 500 ft^3). These volumes include a 3-percent ullage provision. The hydrogen tank is pressurized to a range of 220 600 to 234 400 N/m^2 (32 to 34 psia) and the oxygen tank to 137 900 to 151 700 N/m^2 (20 to 22 psia).

Both tanks are constructed of aluminum alloy skins with support or stability frames as required. The sidewalls and end bulkheads use the largest available width of plate stock. The skins are butt-fusion-welded together to provide reliable sealed joints. The skirt aluminum structure uses skin/stringers with stabilizing frames. The primary structural attachment to the Orbiter consists of one forward and two rear connections.

Spray-on foam insulation (SOFI) is applied to the complete outer surface of the external tank, including the sidewalls and the forward bulkheads. SLA-561 spray-on ablator is applied to all protuberances, such as attachment structures, because shock impingement causes increased heating to these areas. The thermal protection system (TPS) coverage is minimized by using the heat-sink approach provided by the sidewalls and propellants.

Fig 2-17
(Ref 1.4 Page 33)

SOLID ROCKET BOOSTERS

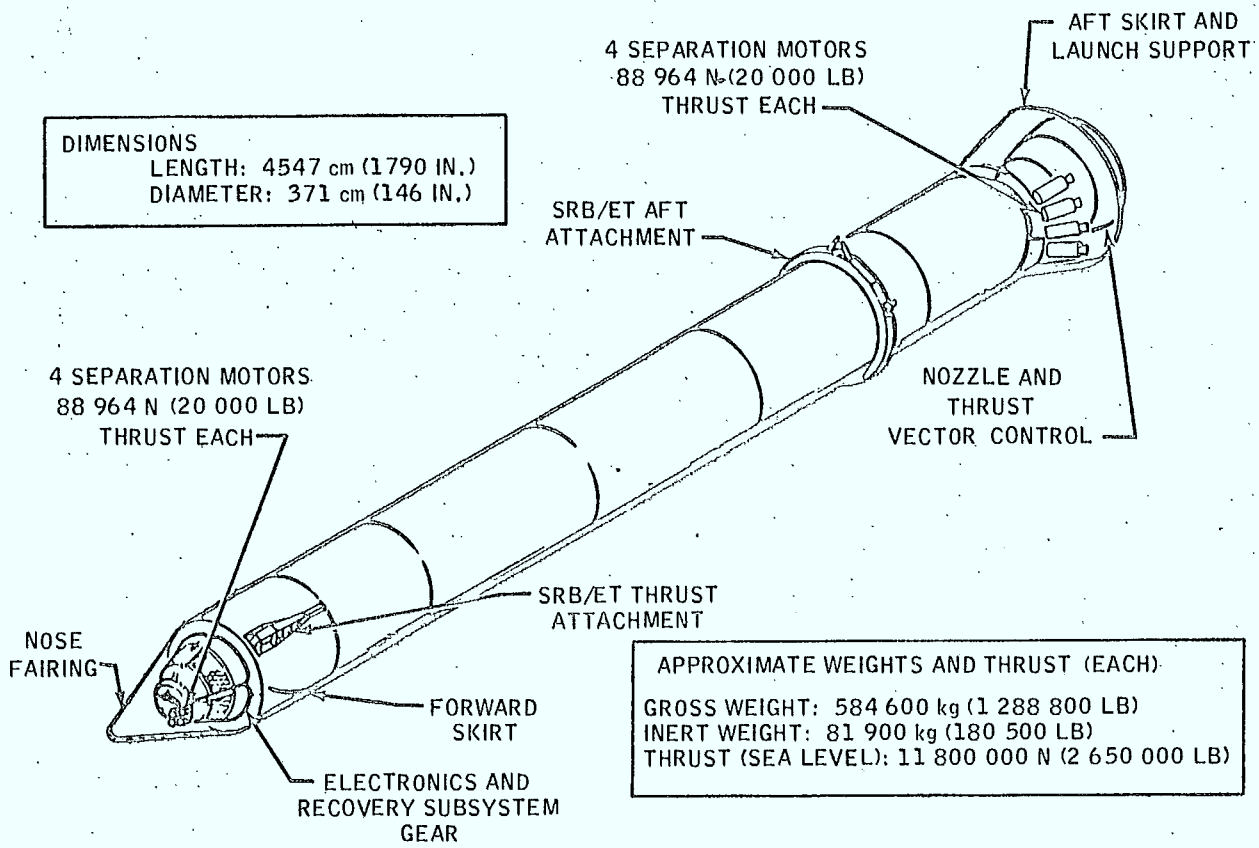

Two solid rocket boosters (SRB's) burn in parallel with the main propulsion system of the Orbiter to provide initial ascent thrust. Primary elements of the booster are the motor, including case, propellant, igniter, and nozzle; forward and aft structures; separation and recovery avionics; and thrust vector control subsystems. Each SRB weighs approximately 584 600 kilograms (1 288 800 pounds) and produces 11 800 000 newtons (2 650 000 pounds) of thrust at sea level. The propellant grain is shaped to reduce thrust approximately one-third 55 seconds after lift-off to prevent overstressing the vehicle during the period of maximum dynamic pressure. The grain is of conventional design, with a star-configured perforation in the forward casting segment and a truncated cone perforation in each of the segments and the aft closure. The contoured nozzle expansion ratio (area of exit to area of throat) is 7.16:1. The thrust vector control subsystem has a maximum omniaxial gimbal capability of slightly over 7° which, in conjunction with the Orbiter main engines, provides flight control during the Shuttle boost phase.

Maximum flexibility in fabrication and ease of transportation and handling are made possible by a segmented case design. Two lateral sway braces and a slide attachment at the aft frame provide the structural attachment between the SRB and the tank. The SRB is attached to the tank at the forward end of the forward skirt by a single thrust attachment. The pilot, drogue, and main parachute risers of the recovery subsystem are attached to the same thrust structure.

The SRB's are released by pyrotechnic separation devices at the forward thrust attachment and the aft sway braces. Eight separation rockets on each SRB (four aft and four forward) separate the SRB from the Orbiter and external tank.

The forward section provides installation space for the SRB electronics and recovery gear and for the forward separation rockets.

Fig 2-18
(See 1.4 Page 34)

ORBITER MAIN PROPULSION

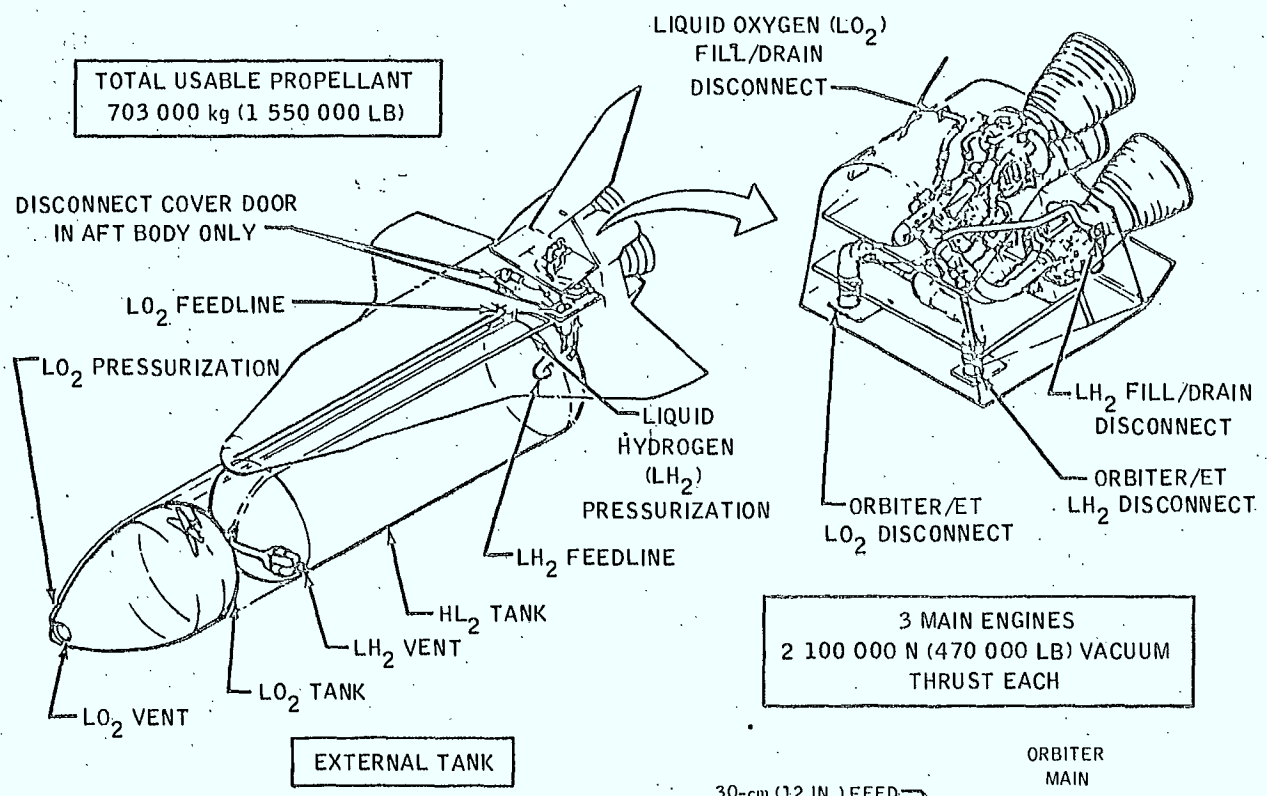

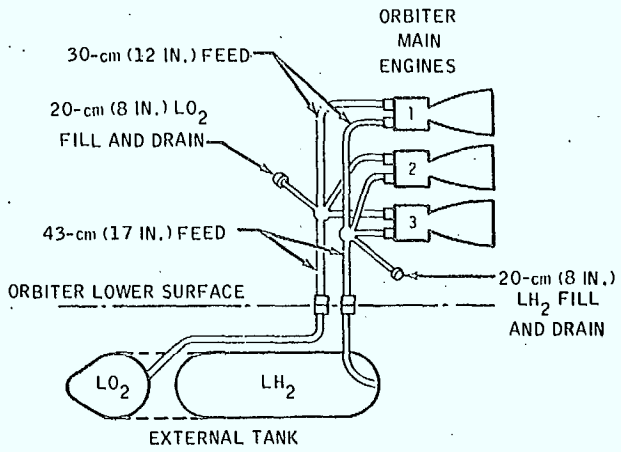

The Orbiter main propulsion engines burn for approximately 8 minutes. These two systems provide the velocity increment necessary to almost achieve the initial mission orbit. The final boost into the desired orbit is provided by the orbital maneuvering system.

Each of the three main engines is approximately 4.3 meters (14 feet) long with a nozzle almost 2.4 meters (8 feet) in diameter, and each produces a nominal sea-level thrust of 1 668 100 newtons (375 000 pounds) and a vacuum thrust of 2 100 000 newtons (470 000 pounds). The engines are throttleable over a thrust range of 50 to 109 percent of the nominal thrust level, so Shuttle acceleration can be limited to 3g. The engines are capable of being gimbaled for flight control during the Orbiter boost phase.

The 603 300 kilograms (1 330 000 pounds) of liquid oxygen and 99 800 kilograms (220 000 pounds) of liquid hydrogen used during ascent are stored in the external tank. The propellant is expended before achieving orbit and the tank falls to the ocean after separating from the Orbiter. The fluid lines interface with the external tank through disconnects located at the bottom of the Orbiter aft fuselage. The hydrogen disconnects are mounted on a carrier plate on the left side of the Orbiter and the oxygen disconnects on the right side. These disconnect openings are covered by large doors immediately after tank separation from the Orbiter. Ground servicing is done through umbilicals on both sides of the aft fuselage.

Fig 2-19
(Ref 1.4 Page 35)

ORBITER REACTION CONTROL

The reaction control subsystem (RCS) has 38 bipropellant primary thrusters and 6 vernier thrusters to provide attitude control and three-axis translation during the orbit insertion, on-orbit, and reentry phases of flight. The RCS consists of three propulsion units, one in the forward module and one in each of the aft propulsion pods. All modules are used for external tank separation, orbit insertion, and orbital maneuvers. Only the aft RCS modules are used for reentry attitude control.

The RCS propellants are nitrogen tetroxide (N_2O_4) as the oxidizer and monomethylhydrazine (MMH) as the fuel. The design mixture ratio of 1.6:1 (oxidizer weight to fuel weight) was set to permit the use of identical propellant tanks for both fuel and oxidizer. The propellant capacity of the tanks in each module is 609 kilograms (1343 pounds) of N_2O_4 and 381 kilograms (840 pounds) of MMH.

ORBITER REACTION CONTROL SUBSYSTEM

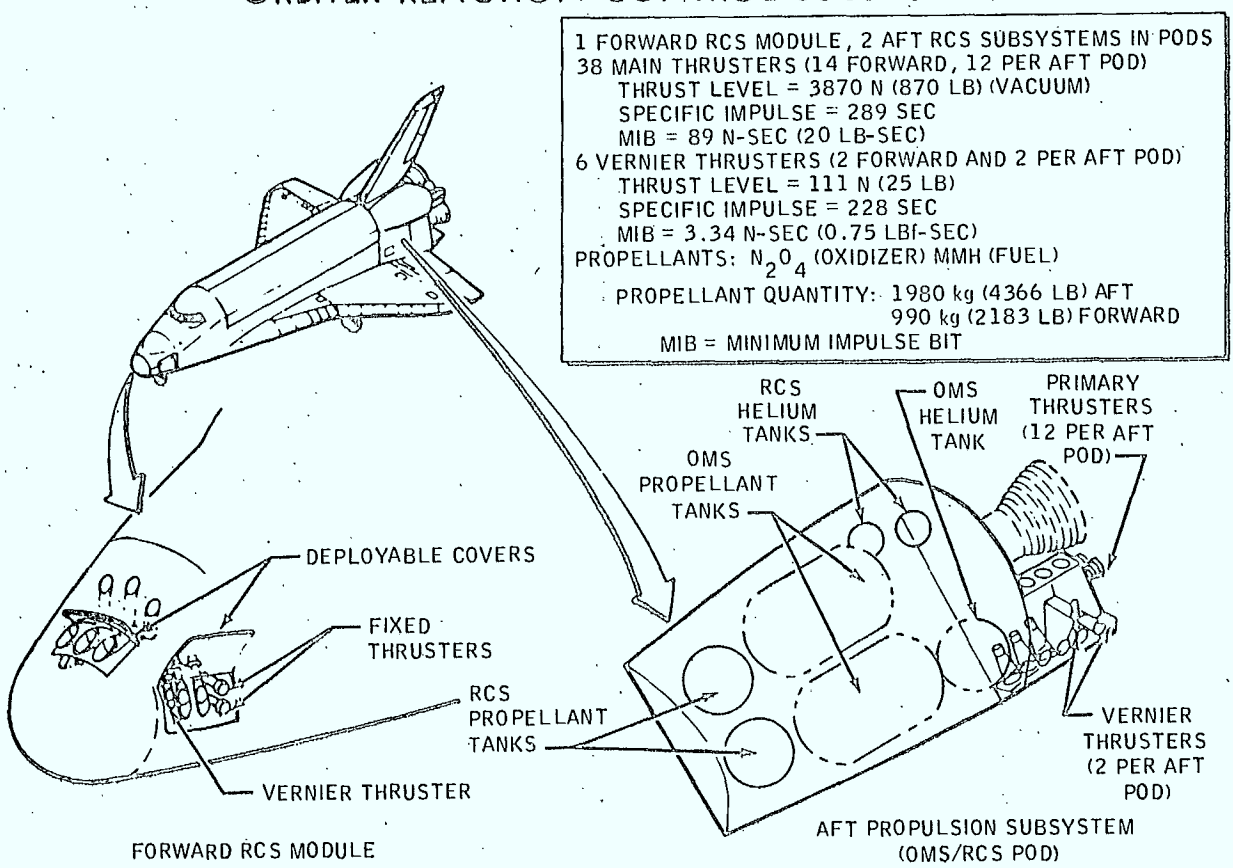

FIG 2-20
(REF 1.4 PAGE 36)

ORBITAL MANEUVERING SUBSYSTEMS

The orbital maneuvering subsystem (OMS) provides the thrust to perform orbit insertion, orbit circularization, orbit transfer, rendezvous, and deorbit. The integral OMS tankage is sized to provide propellant capacity for a change in velocity of 305 m/sec (1000 ft/sec) when the vehicle carries a payload of 29 500 kilograms (65 000 pounds). A portion of this velocity change capacity is used during ascent. The 10 830 kilograms (23 900 pounds) of usable propellant, plus 420 kilograms (925 pounds) of residuals and losses, is contained in two pods, one on each side of the aft fuselage. Each pod contains a high-pressure helium storage bottle; tank pressurization regulators and controls; a fuel tank; an oxidizer tank; and a pressure-fed regeneratively cooled rocket engine. Each engine produces a vacuum thrust of 26 700 newtons (6000 pounds) at a chamber pressure of 861 850 N/m^2 (125 psia) and a specific impulse of 313 seconds.

The OMS and RCS propellant lines are interconnected (1) to supply propellant from the OMS tanks to the RCS thrusters on orbit and (2) to provide crossfeed between the left and right RCS systems. In addition, propellant lines from the auxiliary OMS tanks in the Orbiter cargo bay (if carried as a mission kit) interconnect with the OMS propellant lines in each pod.

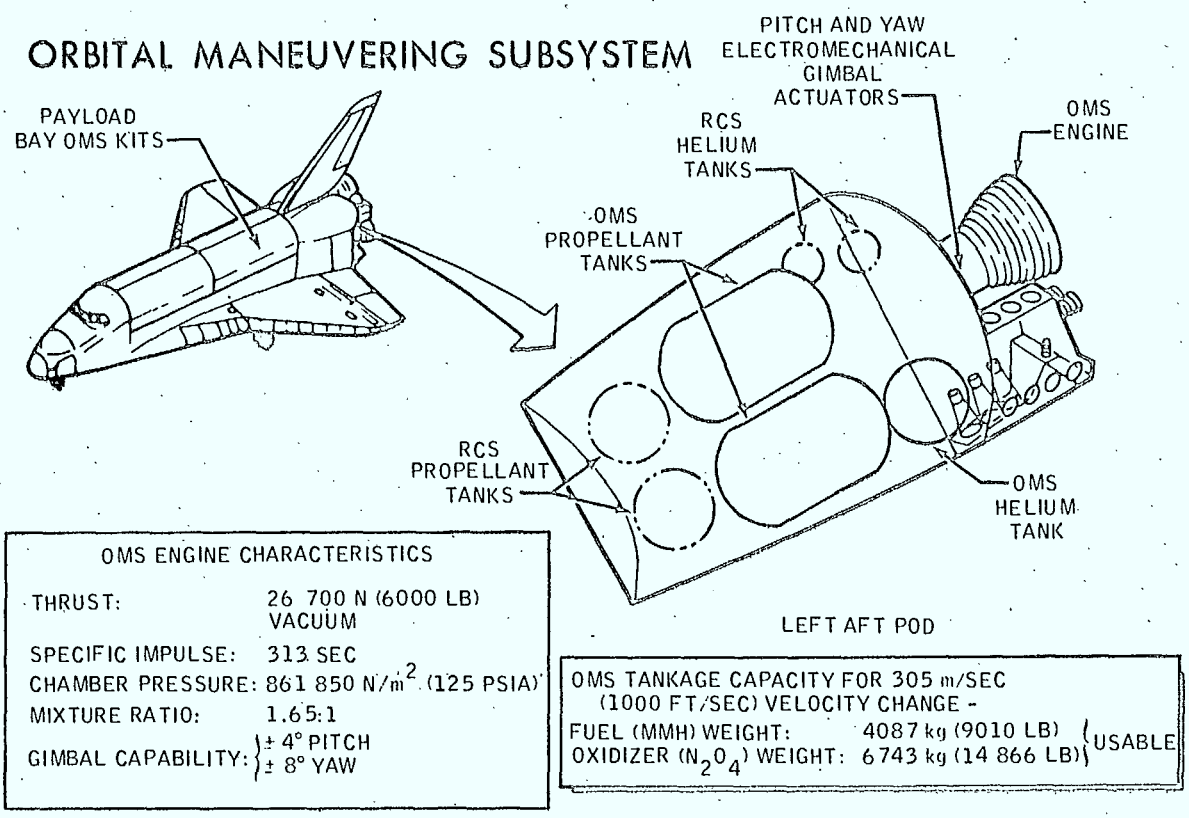

FIG 2-21
(REF 1.4 PAGE 37)

ORBITER STRUCTURE SUBSYSTEM

The Orbiter structure is constructed primarily of aluminum protected by reusable surface insulation. The primary structural subassemblies are the crew module and forward fuselage, midfuselage and payload bay doors, aft fuselage and engine thrust structure, wing, and vertical tail.

The crew module is machined aluminum alloy plate with integral stiffening stringers and internal framing and is welded to create a pressure-tight vessel. The module has a side hatch for normal ingress and egress, a hatch into the airlock from the crew living deck, and a hatch from the airlock into the payload bay. The forward fuselage structure is aluminum alloy skin/stringer panels, frames, and bulkheads. The window frames are machined parts attached to the structural panels and frames.

The midfuselage is an integral machined panel structure and is the primary carrying structure between the forward and aft fuselage; it also includes the wing carrythrough structure. The frames are constructed as a combination of aluminum panels with riveted or machined integral stiffeners and a truss structure center section. The upper half of the midfuselage consists of structural payload bay doors, hinged along the side and split at the top centerline.

The main engine thrust loads to the midfuselage and external tank are carried by the aft fuselage structure. This structure is an aluminum integral machined panel and includes a truss-type internal titanium structure reinforced with boron epoxy. A honeycomb-base aluminum heat shield with insulation at the rear protects the main engine systems.

The wing is constructed with corrugated spar web, truss-type ribs, and riveted skin/stringer covers of aluminum alloy. The elevons are constructed of aluminum honeycomb.

The vertical tail is a two-spar, multirib, stiffened-skin box assembly of aluminum alloy. The tail is bolted to the aft fuselage at the two main spars. The rudder/speed brake assembly is divided into upper and lower sections.

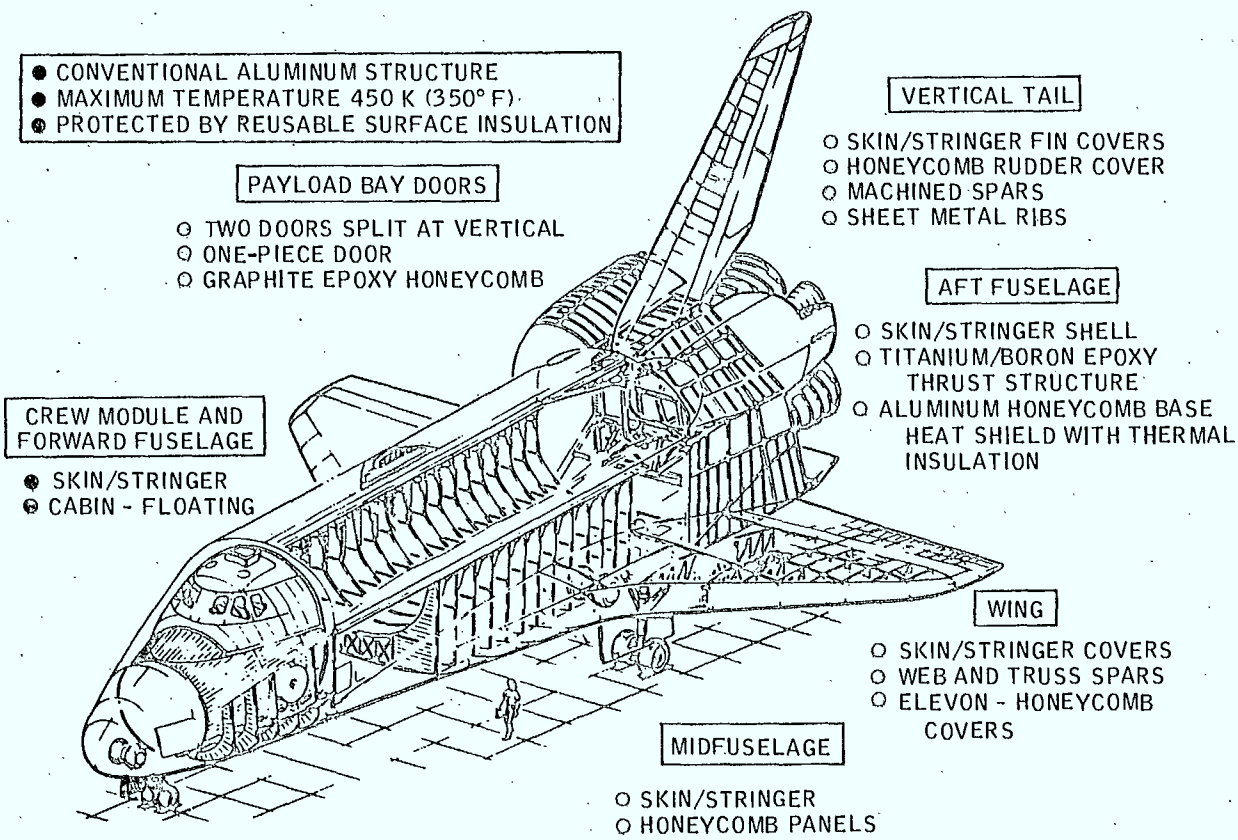

FIG. 2-22
(REF 1.4 PAGE 3B)

ORBITER THERMAL PROTECTION SYSTEM

The thermal protection subsystem (TPS) consists of materials applied externally to the primary structural shell of the Orbiter vehicle to maintain the airframe within acceptable temperature limits. The TPS is composed of two types of reusable surface insulation (RSI), a high-temperature structure coupled with internal insulation, thermal window panes, and thermal seals to protect against aerodynamic heating.

The Orbiter is predominantly covered by RSI made of coated silica tile. The two types of RSI differ only physically to provide protection for different temperature regimes. The low-temperature reusable surface insulation (LRSI) is 20-centimeter (8 inch) square silica tiles and covers the top of the vehicle where temperatures are less than 925 K (1200° F). The high-temperature reusable surface insulation (HRSI) is 15-centimeter (6 inch) square silica tiles and covers the bottom and some leading edges of the Orbiter where temperatures are below 1500 K (2300° F). A high-temperature structure of reinforced carbon-carbon (RCC) is used with internal insulation for the nose cap and wing leading edges where temperatures are greater than 1500 K (2300° F).

INSULATION	AREA	MAXIMUM DESIGN TEMPERATURE
LRSI	603 m^2 (6488 FT^2)	900 K (1200° F)
HRSI	434 m^2 (4670 FT^2)	1500 K (2300° F)
RCC	38 m^2 (409 FT^2)	1800 K (2800° F)
TOTAL	1075 m^2 (11 567 FT^2)	--

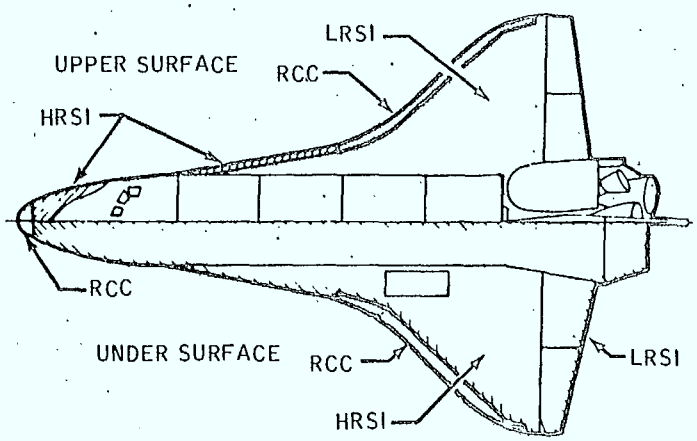

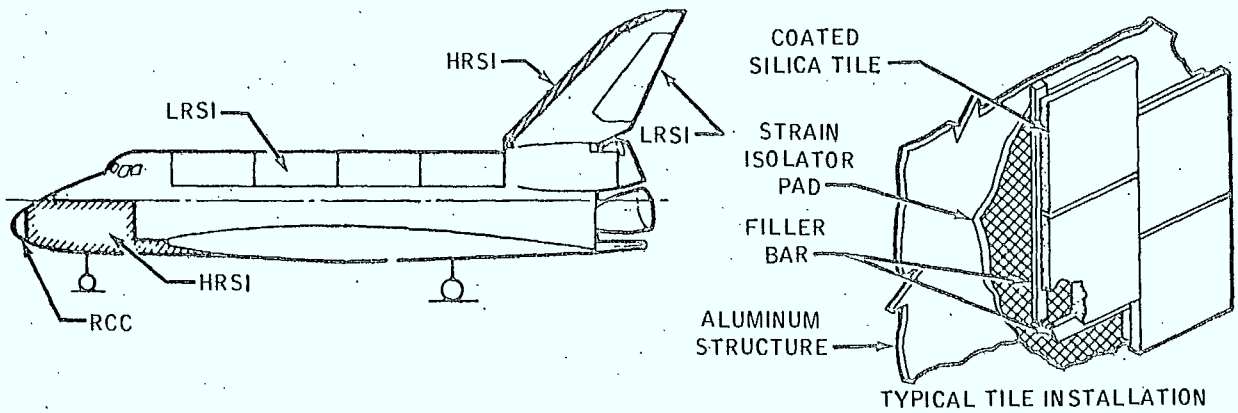

FIG 2-23
(Ref 1.4 Page 39)

2.3 Shuttle Performance Requirements and Payload Services

Detailed payload performance requirements for the Shuttle, as a function of orbit altitude and inclination, together with payload acommodations and services provided by the Orbiter are presented in Figures 2-24 through 2-33.

Mission Payload Launch Requirements and System Requirements

DESIGN MISSIONS

- MISSION I
  29,510 KILOGRAMS (65,000 LB) - 185 KILOMETERS (100 NM) DUE EAST, KENNEDY SPACE CENTER, FLA. (KSC)
- MISSION II
  11,250 KILOGRAMS (25,000 LB) - 500 KILOMETERS (270 NM) 55° INCLINATION, KENNEDY SPACE CENTER, FLA. (KSC)
- MISSION III
  14,528 KILOGRAMS (32,000 LB) - 185 KILOMETERS (100 NM) POLAR, WESTERN TEST RANGE, CALIF., (WTR) DEPLOYMENT

SYSTEM REQUIREMENTS

- REUSABLE ORBITER & SOLID ROCKET BOOSTERS
- CROSS-RANGE MANEUVERING 2,037 KILOMETERS (1100 NM)
- RETURN TO LAUNCH SITE ONE REVOLUTION
- PAYLOAD BAY 4.57 X 18.3 METERS (15 X 60 FT)
- 160-HOUR TURNAROUND
- SAFE MISSION TERMINATION (ABORTS ALL PHASES)
- LESS THAN 3G's, ASCENT THROUGH LANDING
- HOLD IN STANDBY FOR 24 HRS; LAUNCH FROM STANDBY IN 2 HRS
- SUBSYSTEMS REDUNDANCY, MINIMUM FAIL-SAFE

Fig 2-24 (Ref 1.5 page 5)

Orbiter Vehicle Requirements

PROVISIONS

- BASIC 4-MAN CREW
- 7-DAY MISSION (28 MAN-DAY SUPPORT)
- THREE ADDITIONAL CREWMEN
- SHORT-DURATION MISSION (49 MAN-DAY SUPPORT)
- DESIGN NOT TO PRECLUDE 30-DAY MISSION
- EXTRAVEHICULAR/INTRAVEHICULAR ACTIVITY CAPABILITY

RETURN (LAND) PAYLOAD TO EARTH 14,515 KILOGRAMS (32,000 LB)

DOCKING PROVISIONS (DAYLIGHT OR DARK)

COOPERATIVE TARGET IN-PLANE RENDEZVOUS 555 KILOMETERS (300 NM) DISPLACEMENT

RENDEZVOUS & RETRIEVE PASSIVE STABILIZED ELEMENT

OPERATE ON RUNWAYS 45.75 X 3,050 METERS (150 X 10,000 FT)

NORMAL FLIGHT CONTROL & STRUCTURAL DYNAMICS

- SPACE & ATMOSPHERIC OPERATIONS
- SUBSONIC & HYPERSONIC FLIGHT

MINIMUM ENVIRONMENTAL IMPACT

MINIMIZE PAYLOAD CONTAMINATION (REACTION CONTROL SUBSYSTEM EXHAUST IMPINGEMENT, ETC.)

Fig 2-25 (Rec vs Range 9)

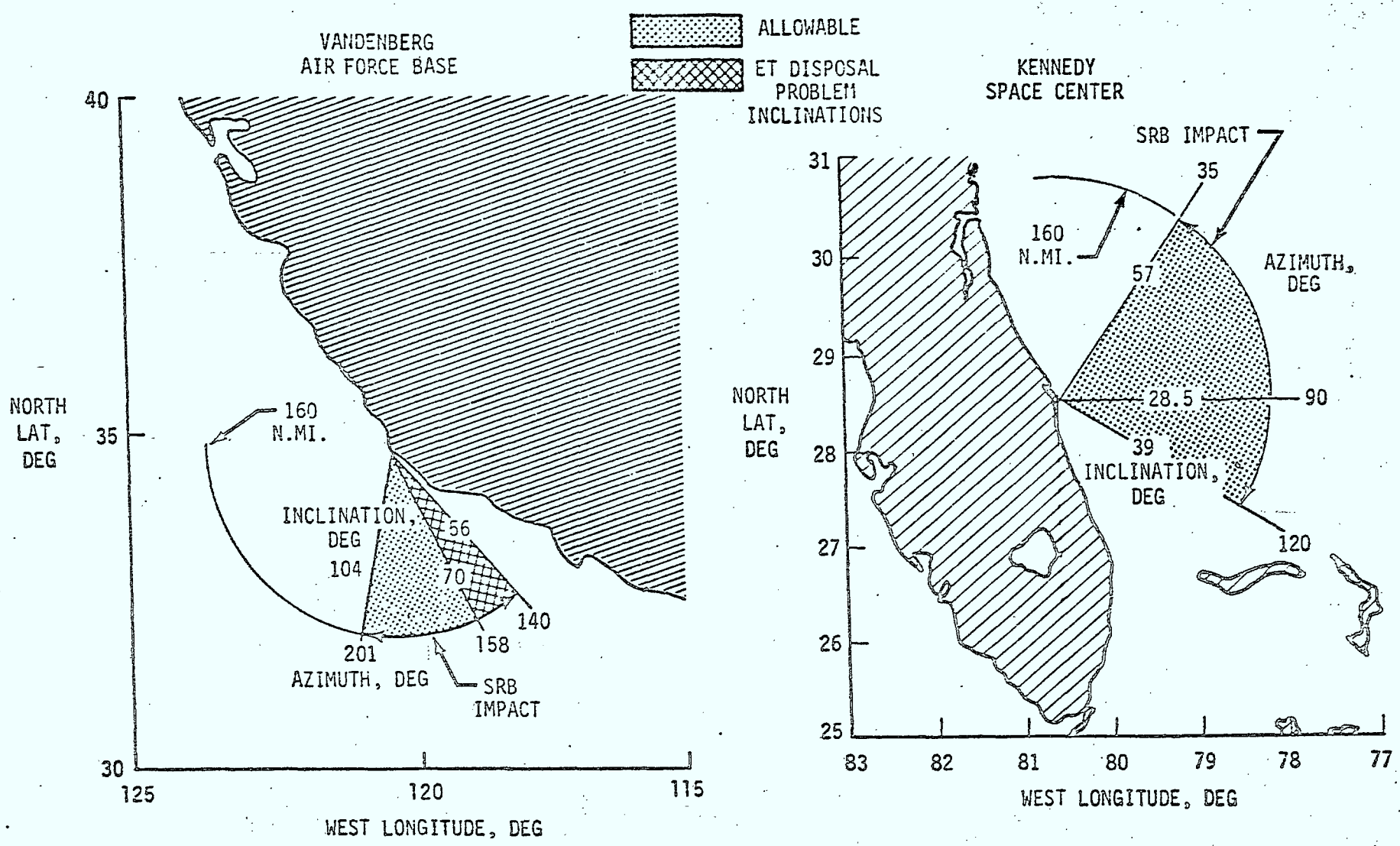

Launch azimuth and inclination limits from VAFB and KSC.

(Reg Fig 2-26 Page 3-21)

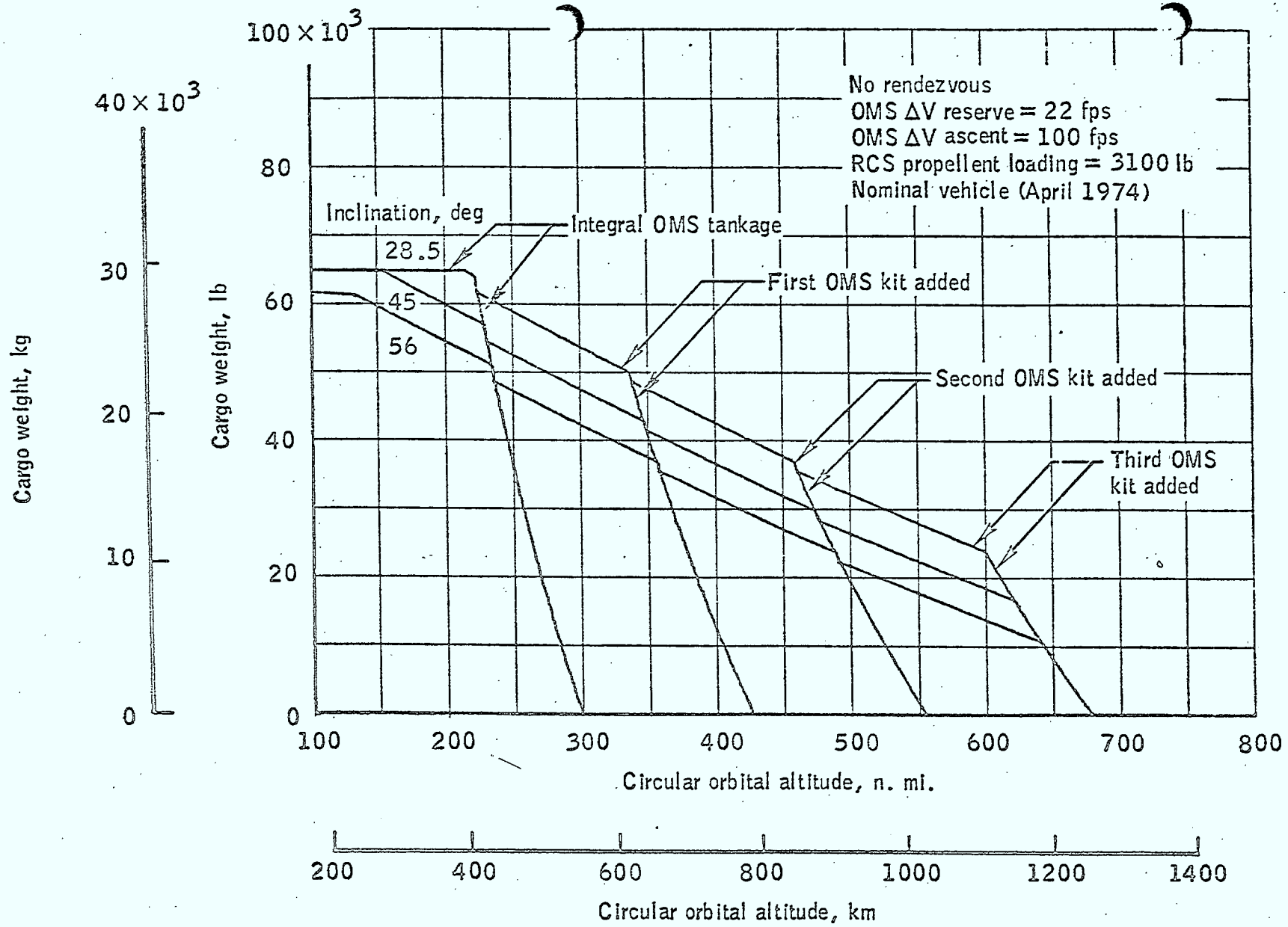

Cargo weight versus circular orbital altitude - KSC launch, delivery only.

Fig 2-27 (Rep 1.6 page 3-28)

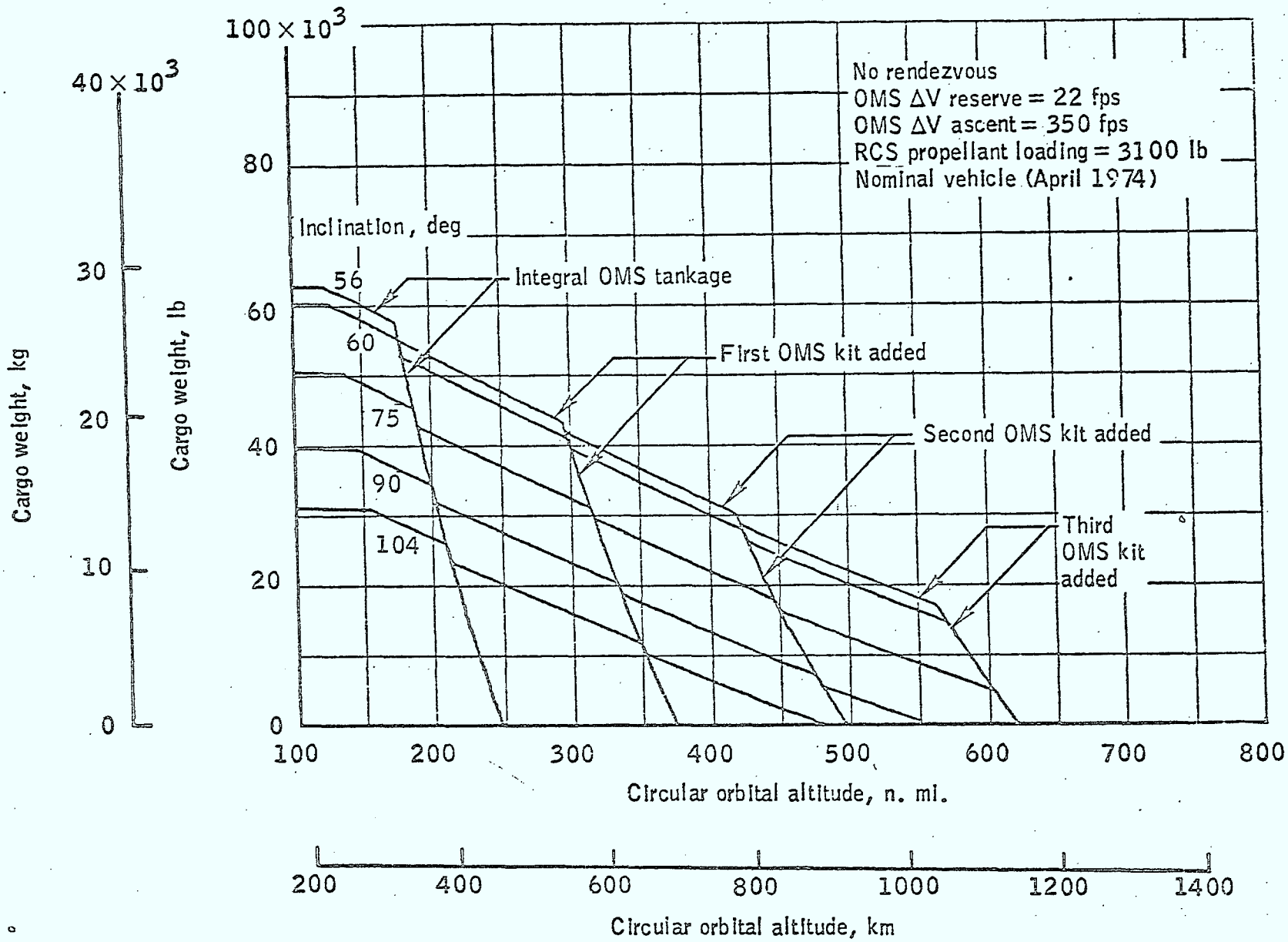

Cargo weight versus circular orbital altitude - VAFB launch. delivery only.

Fig 2-28 (Ref 1.6 Page 3-23)

a. Structural Attachment - Thirteen payload structural attachment points nine of which are evenly spaced 59 inches (1498.6mm) apart, are provided along the payload bay for structural attachment of payloads to the Orbiter. For non-deployable payloads, the Orbiter can provide special vernier bridges which accommodate bolt-down payload fittings at a spacing of 11.8 inches (299.72 mm).

b. Crew Accommodations - The Orbiter provides for 28 mandays of expendables and crew equipment for four men. Stowage is provided for 42 manday's of provisioning. The provisioning for personnel in excess of four and the expendables in excess of 28 mandays are payload weight chargeable. The Orbiter crew compartment consists of a two-level cabin. The upper level is dedicated to flight and payload operations. The lower level (middeck) provides off-duty crewman with sleep stations, food service station, personnel hygiene station, and exercise facilities.

c. Remote Manipulator System - The Orbiter is provided with a manipulator arm, mounted on the left longeron and capable of reaching 50 feet from the pivot point. A TV camera and a light are mounted on the manipulator arm permitting its use for payload and vehicle inspection as well as manipulating payloads. A second similarly equipped manipulator to be mounted on the right longeron is available as a payload chargeable option.

d. Electrical Power - 50 KWH of nominal 28 VDC electrical power is provided to the payload bay for payloads. Within the limits of power availability and heat rejection capability additional power will be supplied as a payload weight chargeable item.

e. Environmental Control and Life Support - The Orbiter, besides controlling the environment within the crew cabin, provides the capability to control the environment within attached habitable payloads. Limited heat rejection capability is provided for attached payloads.

f. Payload Service Panels - Services are provided in the payload bay by means of service panels at which electrical, communication and fluid interfaces between payload and Orbiter hardware occur.

g. Airlock and Hatch - Personnel access to habitable payloads or for EVA into the payload bay is provided by the airlock and payload bay hatch. The openings are 40 inches (1.02 meter) in diameter and provide adequate clearance for both suited and unsuited crewmen and for packages of limited size.

h. Docking Module - The docking module is optional and payload chargeable. It may be attached to the forward bulkhead at the payload bay hatch and can be used together with a tunnel to connect a habitable payload to the crew cabin.

i. Avionics - Avionics provides to payloads, data necessary to initialize the payload, onboard digital computation, voice communication, reception of up-link commands and data, transmission of digital and wide-band data, transmission of TV, data transmission to a detached payload, and capability to track.

j. EVA - The Orbiter provides the equipment and expendables to support Extra Vehicular Activities (EVA) for planned or contingency EVA operations.

k. Fluid Interfaces - The Shuttle provides the fluid interface provisions necessary to fill, purge vent, and/or drain payload consumables. The capability is also provided to dump certain payload consumables.

FIG 2-29
(REF 1.6 PAGES 2-2,3,4)

PAYLOAD ACCOMMODATIONS

The Orbiter systems are being designed to handle various payloads and to support a variety of payload functions. The payload and mission specialist stations on the flight deck provide command and control facilities for payload operations required by the cognizant scientist (the user). Remote-control techniques can be employed from the ground when desirable. The Spacelab payload provides additional command and data management capability plus a work area in the payload bay for the payload specialists. The crew will be able to use a manipulator to handle complete payloads or selected packages.

The manipulator arm, complemented by the television display system, allows the payload operator to transfer experiment packages and cargo in and out of the Orbiter bay, to place into orbit spacecraft carried up by the Shuttle, and to inspect retrieved orbital spacecraft. The system can also aid in inspection of critical areas on the vehicle exterior, such as the heat shield.

PAYLOAD/ORBITER INTERFACES

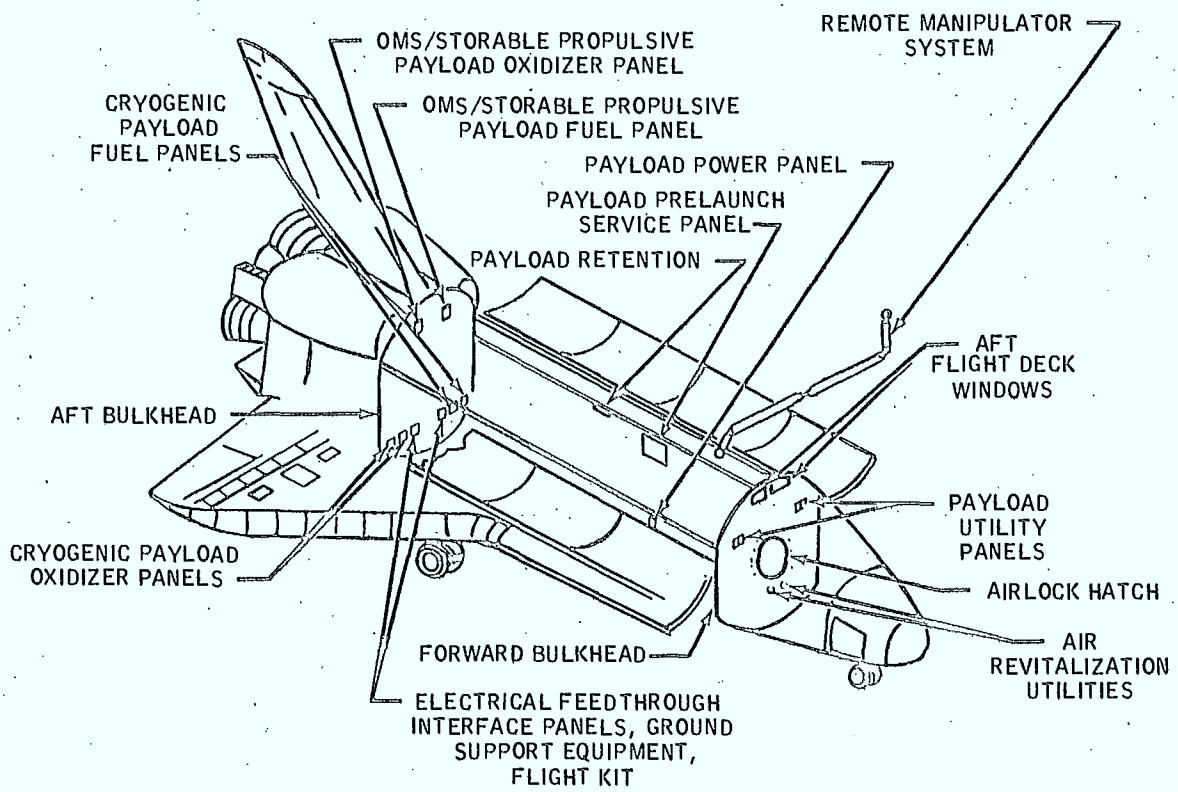

FIG 2-30
(REF 1.4 PAGE 40)

PAYLOAD DEPLOYMENT/RETRIEVAL MECHANISM

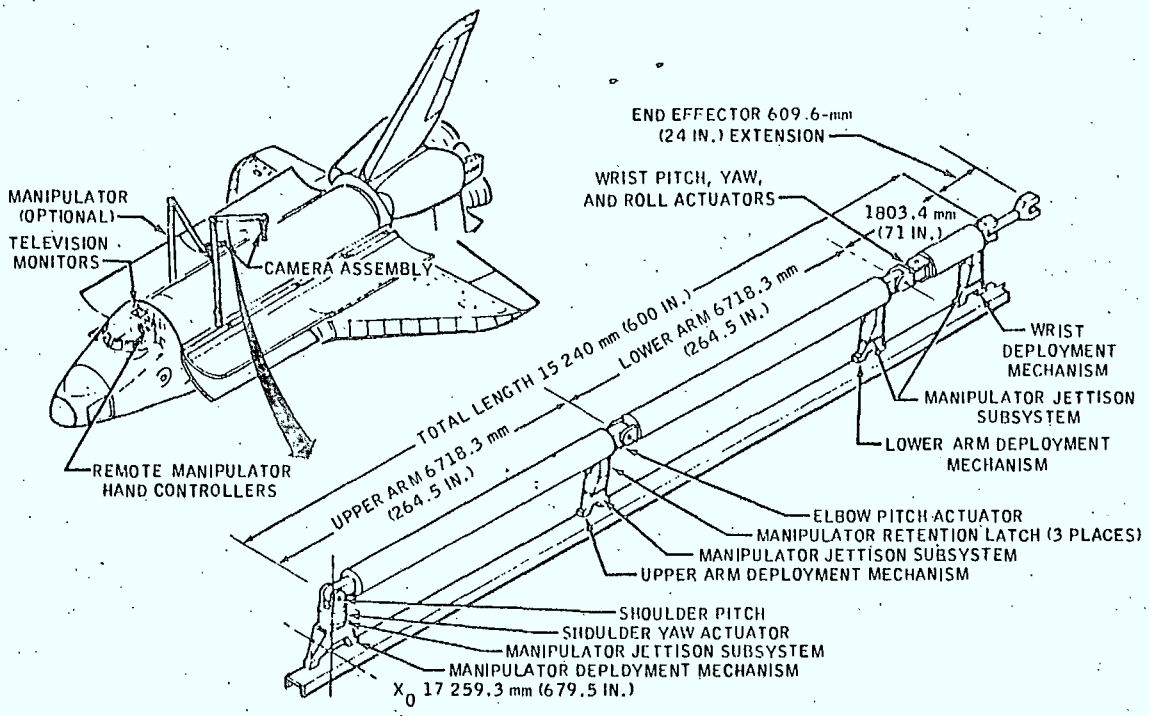

The deployment and retrieval of payloads are accomplished by using the general-purpose remote manipulator system. Payload retrieval involves the combined operations of rendezvous, stationkeeping, and manipulator arm control. One manipulator arm is standard equipment on the Orbiter and may be mounted on either the left or right longeron. A second arm can be installed and controlled separately for payloads requiring handling with two manipulators. Each arm has remotely controlled television and lights to provide side viewing and depth perception. Lights on booms and side bulkheads provide appropriate illumination levels for any task that must be performed in the payload bay.

FIG. 2-31
(SEE 1.4 PAGE 42/43)

PAYLOAD ATTACHMENTS

Numerous attachment points along the sides and bottom of the 18-meter (60 foot) payload bay provide places for the many payloads to be accommodated. Thirteen primary attachment points along the sides accept longitudinal and vertical loads. There are twelve positions along the keel that take lateral loads. The proposed design of the standard attachment fitting includes adjustment capability to adapt to specific payload weight distributions in the bay.

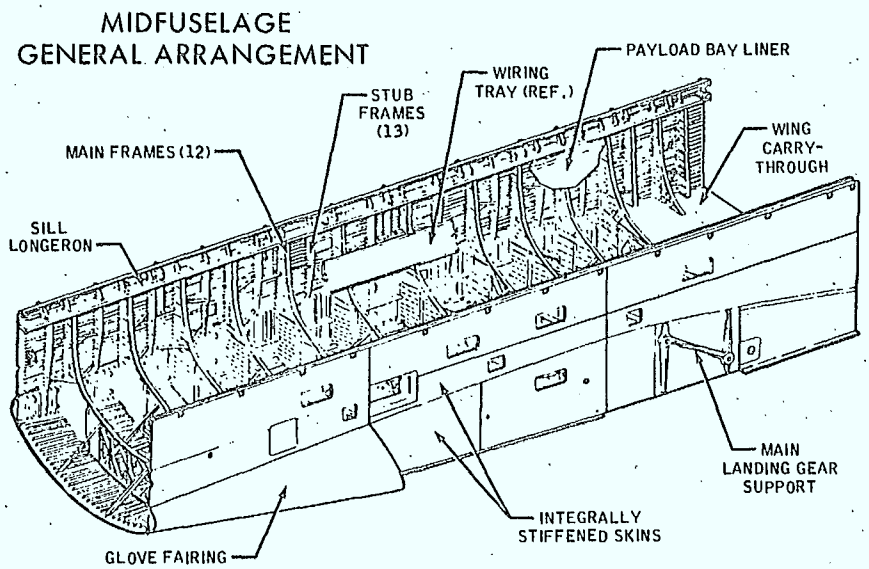

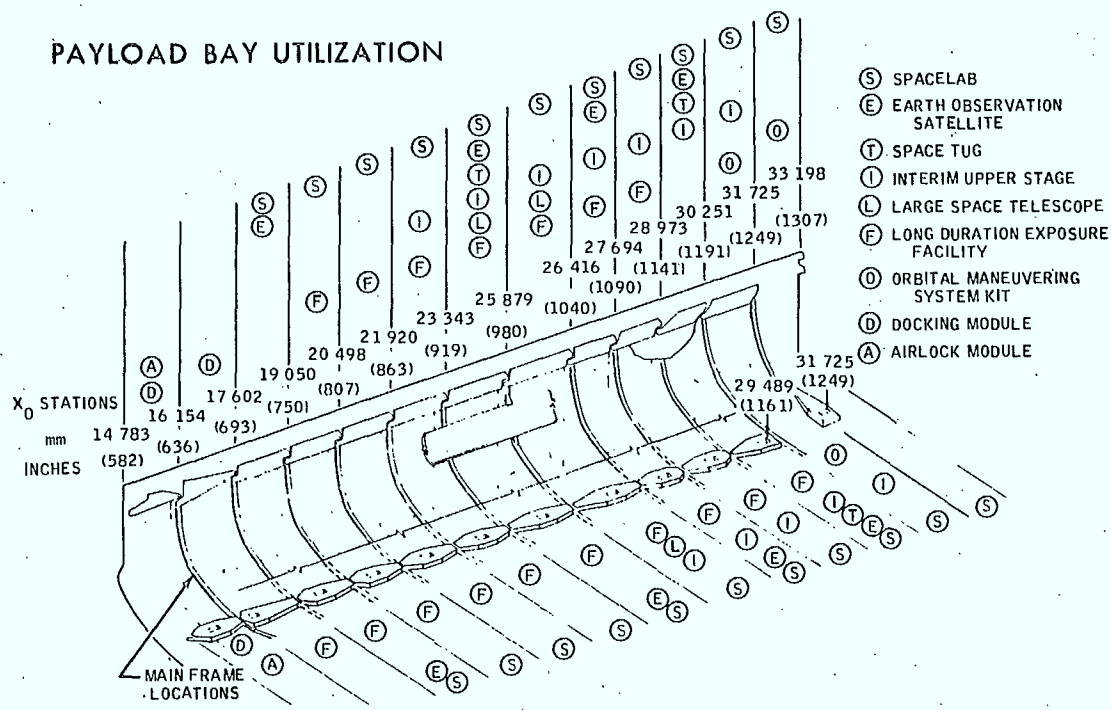

FIG 2-32
(REF 1.4 PAGE 47)

PAYLOAD POINTING AND STABILIZATION SUPPORT

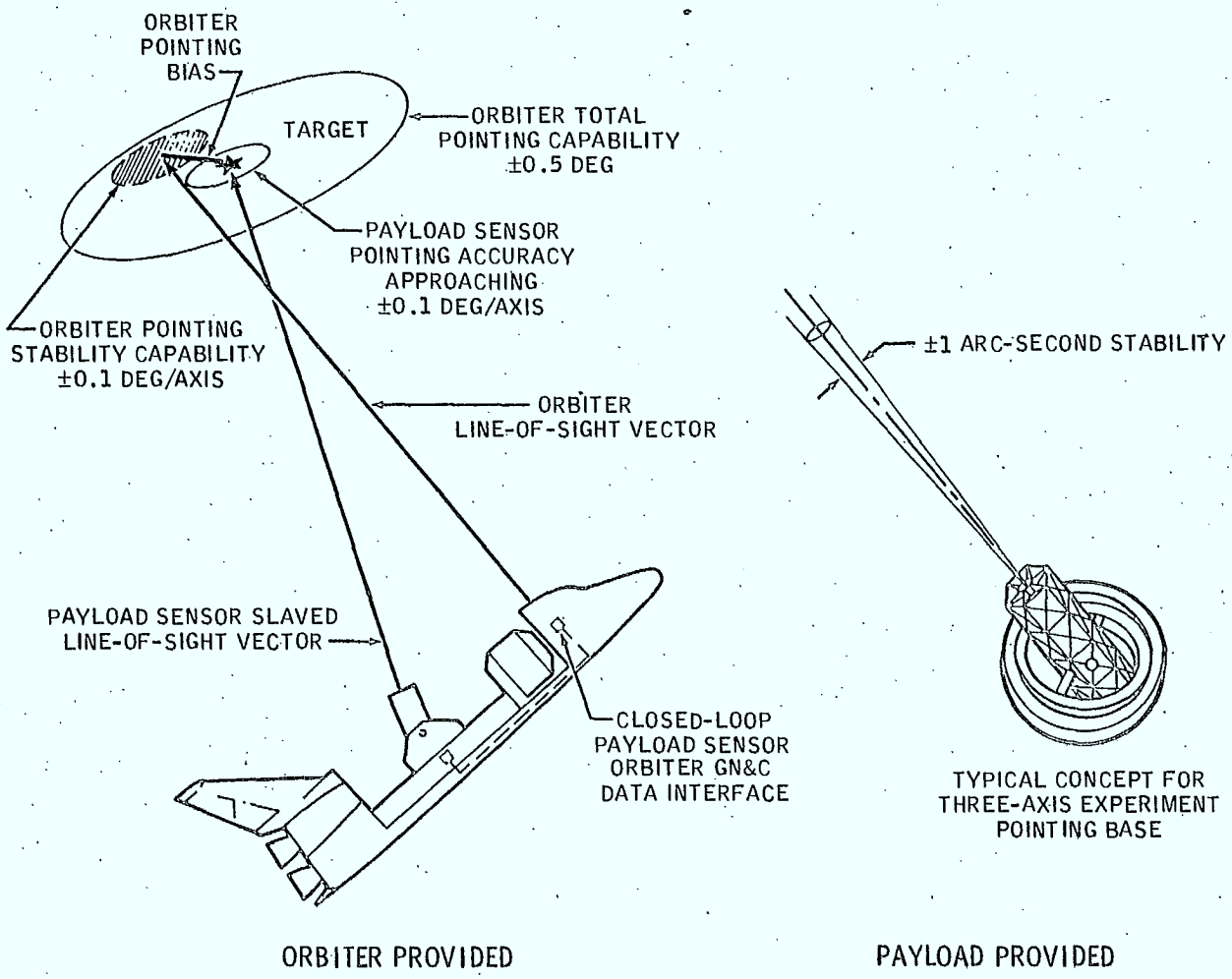

The Orbiter is capable of achieving any desired vehicle attitude and initiating a pointing vector defined in its sensor-fixed axis system to any ground or celestial object within an accuracy of ±0.5°. Pointing vector accuracies with respect to an open loop payload sensor-fixed axis system are not as exact as the vehicle pointing accuracies because large misalinement and structural deformation error sources exist between the sensors. However, when the Orbiter guidance, navigation, and control system and a more accurate payload-mounted sensor are operated in a closed loop, payload pointing accuracies approaching ±0.1 deg/axis are possible. In either case, the Orbiter can be stabilized at a rate as low as ±0.01 deg/sec. Payloads requiring more stringent pointing and stability accuracies must provide their own stabilization and control system for that particular experiment. Orbiter guidance, navigation, and control system data interfaces are also provided to accommodate these types of payload requirements.

FIG 2-33.
(REF 1.4 PAGE 59)

3.0 STS UPPER STAGES

Payload transfer from Shuttle to higher energy orbits is currently planned to be carried out by the following propulsion stages, transported to low earth orbit in the Orbiter payload bay:

- Interim Upper Stage (IUS), (from 1980 to 1985).
- Space Tug (from 1985 onwards).

Details of these two propulsive stages are presented below. Also presented is a recently proposed concept for cost competitively transferring payloads, mainly to geosynchronous orbit.

3.1 IUS

The IUS as its name applies is an interim upper stage, designed to accommodate the requirements of the Shuttle payload model through 1985. Its use will permit development of the reusable Space Tug to be delayed until the Shuttle funding peak has passed.

Development and funding of the IUS is the responsibility of the DOD. As such, they have taken the position that the IUS will be designed to meet DOD unique requirements and that other users, including NASA, will have to find their own growth options.

Final definition of the IUS performance and selection of an IUS contractor is an on-going activity. DOD's Space and Missiles System Organization (SAMSO) in a recent suprise announcement, indicated that an IUS would be a solid propellant vehicle, effectively curtailing study contracts that had been awarded to five organizations to study modifications required to existing vehicles to meet IUS requirements, (four of these vehicles being liquid fueled with Boeing's Burner II being the only solid fueled vehicle). At an IUS pre-proposal bidders conference held recently (mid-October) at SAMSO, Los Angeles, eight system contractors were

given Space Shuttle IUS Bidders Data Packages. These eight companies were Boeing, General Dynamics, Lockheed, Martin Marietta, McDonnell-Douglas, Fairchild, LTV Aerospace and RCA. SAMSO indicated that RFP's would be issued within sixty days, proposals received ninety days after RFP issuance and either a cost plus award fee or cost plus incentive fee design to cost contract awarded by next summer.

The IUS development is expected to cost 100 million dollars and a need for one hundred vehicles is seen between 1980 and 1985.

The IUS as indicated is an expendible solid fuel vehicle, using Class 2 propellants and thrust vector control. The decision to use only solid fuels was made on the basis of minimizing cost, risk and interface problems with the Shuttle.

Performance requirements for the IUS are expected to be approximately 3,500 pounds of payload into geosynchronous orbit.

Data from the Boeing Burner II Study indicate the type of configuration and performance expected of the IUS.

- First stage, 20,000 pounds.
- Second stage, 4,700 pounds.
- Payload to geosynchronous orbit, 4,000 pounds.
- Payload to geosynchronous orbit using two first stages and one second stage, 7,000 pounds.

Although current plans call for the use of IUS only until 1985 (when is expected that the space Tug will become operational) there is widespread feeling that the IUS will continue to perform a large percentage of the orbit transfer tasks well beyond this point in time.

3.2 Space Tug

The Space Tug is proposed to provide the economical unmanned extension of the STS operating regime from Shuttle to higher energy orbits.

It will be an unmanned vehicle carried to low earth orbit, with payload attached, in the Shuttle payload bay. Following completion of its mission, it will be returned to earth (except in the case of those few missions which may require expenditure of the Tug), again, in the payload bay of the orbiter. After each mission it will be refurbished for reuse.

The current conceptual design of the baseline Tug is described below and in Figures 3-1 and 3-2.

The Tug is approximately 14 1/2 feet in diameter, and about 30 feet in length, allowing it to accommodate payloads up to 30 feet long within the 60 foot length of the Shuttle payload bay. Fully fueled, it weighs approximately 57,000 pounds. In addition, the Tug-to-Shuttle adaptor and other Tug support equipment on board the Shuttle weighs approximately 2,000 pounds. Payloads weighing up to 6,000 pounds can be accommodated with the Tug fully fueled. Heavier payloads for missions not requiring maximum Tug performance can be accommodated by off loading Tug propellants.

The current configuration consists of a single stage fueled with liquid hydrogen and liquid oxygen. It has one modified RL-10 engine of 15,000 pounds thrust which is gimballed to provide steering control. The propellants carried by the stage allow a total burn time of approximately 1,200 seconds. The engine has the capability for multiple restarts permitting complex spacecraft placement operations. The Tug will be designed to remain in orbit and perform manoeuvres for six days.

For attitude control when the main engine is not firing and for closely controlled manoeuvres, the

stage has a mono propellant hydrazine attitude control propulsion system.

Tug avionics are carried in the forward end of the vehicle. On board guidance is provided by a strap-down inertial platform with a strap-down star tracker for providing updates and corrections. An on-board computer performs guidance and navigation calculations as well as condition and performance monitoring, and mission sequence functions. The Tug will carry a transponder to operate with ground tracking stations, and with a Tracking and Data Relay Satellite. It will have the capability for receiving and decoding commands and telemetering of Tug and payload status performance data. A scanning laser radar and a television camera carried in the forward end of the Tug will be the instruments for control of rendezvous and docking operations for the spacecraft. The Tug will also have the capability to operate with the spacecraft transponder. A fuel cell and an emergency battery will be the sources of on-board power.

Fittings will be provided on the aft end of the Tug to mate with the docking adaptor in the Shuttle cargo bay. This adaptor will be pivoted to rotate the Tug out of and into the Shuttle payload bay. Deployment as well as docking will be accomplished by the Shuttle manipulator arm grasping a fitting suitably mounted on the body of the Tug.

A suitable mounting for payloads will be provided on the forward end of the Tug. The Tug will also be capable of providing supporting services to spacecraft. These include:

- Flexibility in the placement of payloads.
- Provision of electrical power for the spacecraft.
- Provision of communcations support for the payload.

- Provision of thermal control for the payload.
- Capability of providing spin to the payload.

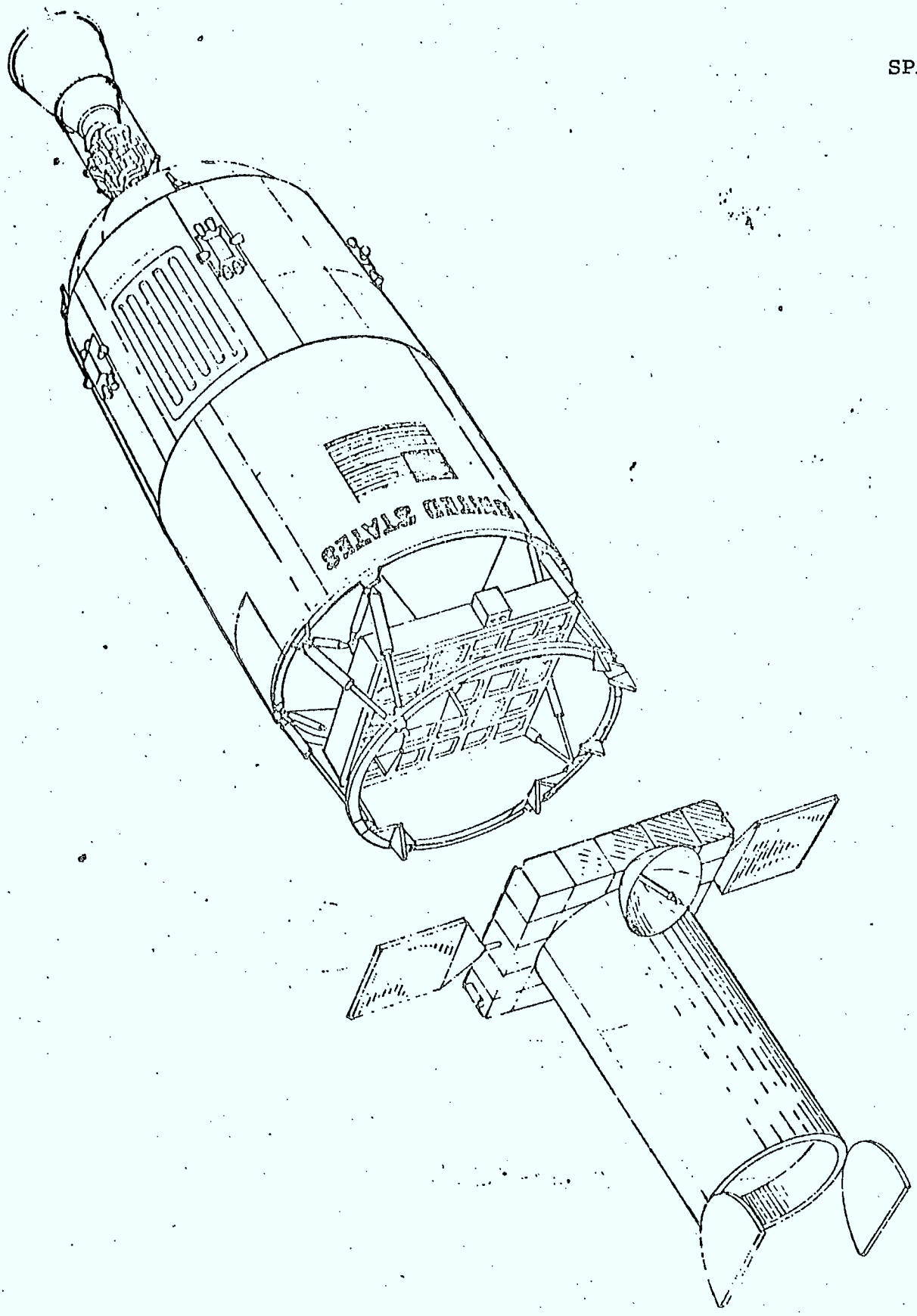

Space Tug conducting mission to service spacecraft in orbit.

FIG 3-1
(REF 1.9 PAGE 18)

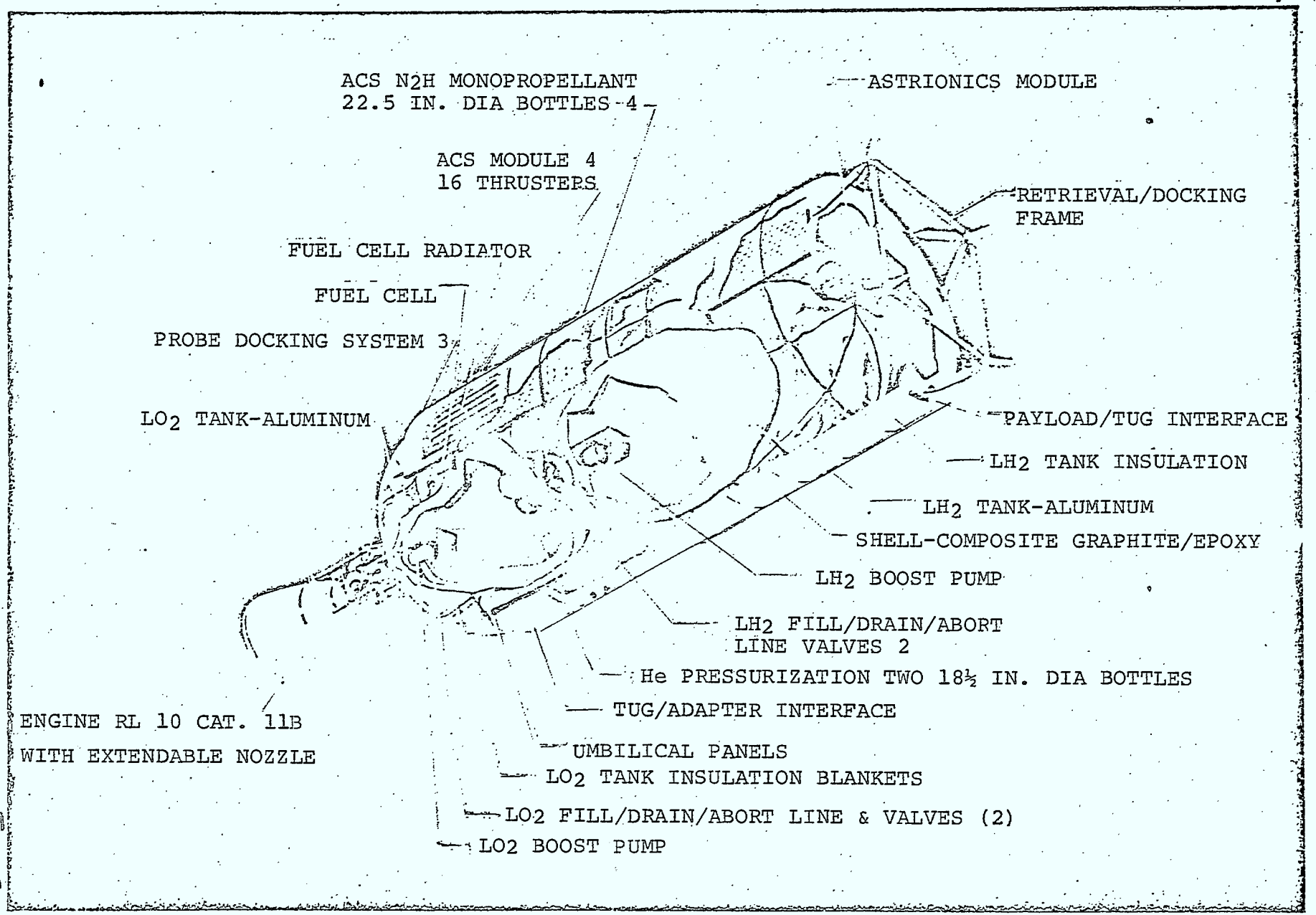

Cutaway view of Space Tug showing interior arrangement of components.

Fig 3-2 (Page 17 - Page 8)

The Tug will be capable of performing a variety of missions, these fall into four general classes:

- Placement (deployment) where the payload is transported to the desired orbit or trajectory, then the Tug returns to low-earth orbit for rendezvous with the Shuttle and return to earth. One advantage the Tug has over present expendible vehicles in this mode of operation is the accurate placement of payloads, due to its ability to determine position and attitude with a high degree of accuracy.

- Retrieval. The Tug will be capable of retrieving spacecraft (assuming they have been designed for retrieval) from higher energy orbits than those obtainable by the Shuttle.

- Round Trip. Deployment of one payload and retrieval of another on the same mission.

- Visit (for servicing). The Tug will rendezvous with the spacecraft, perform the servicing or check out operation and then return alone to the orbiter. The only payload carried on such a mission would be a servicer and resupply modules.

Typical mission sequences are shown in Figure 3-3. Performance data for the above classes of missions is presented in Figure 3-4.

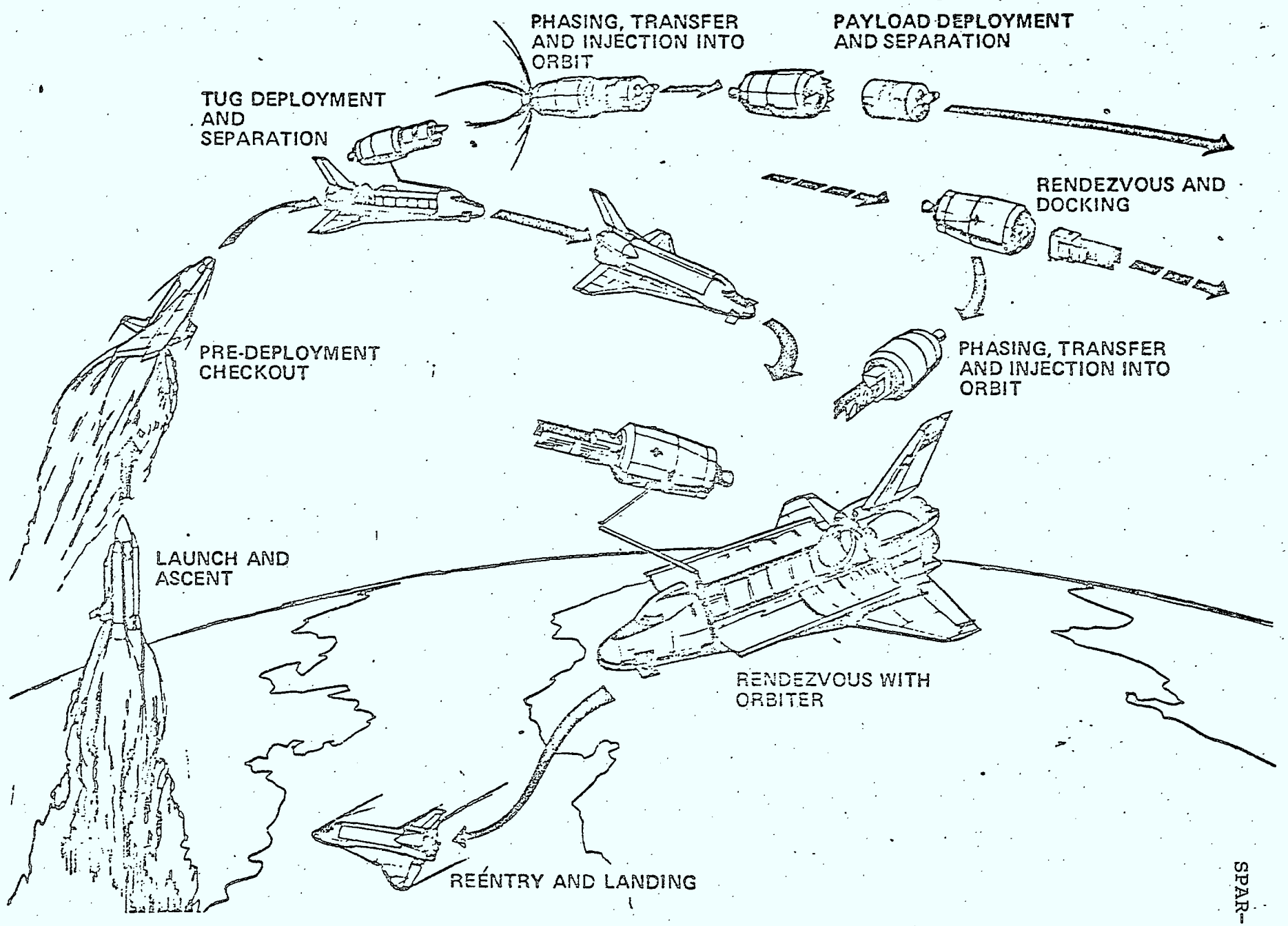

Typical Space Tug mission showing payload deployment and retrieval.

FIG 3-3 (PAGE 1.7 PAGE 12)

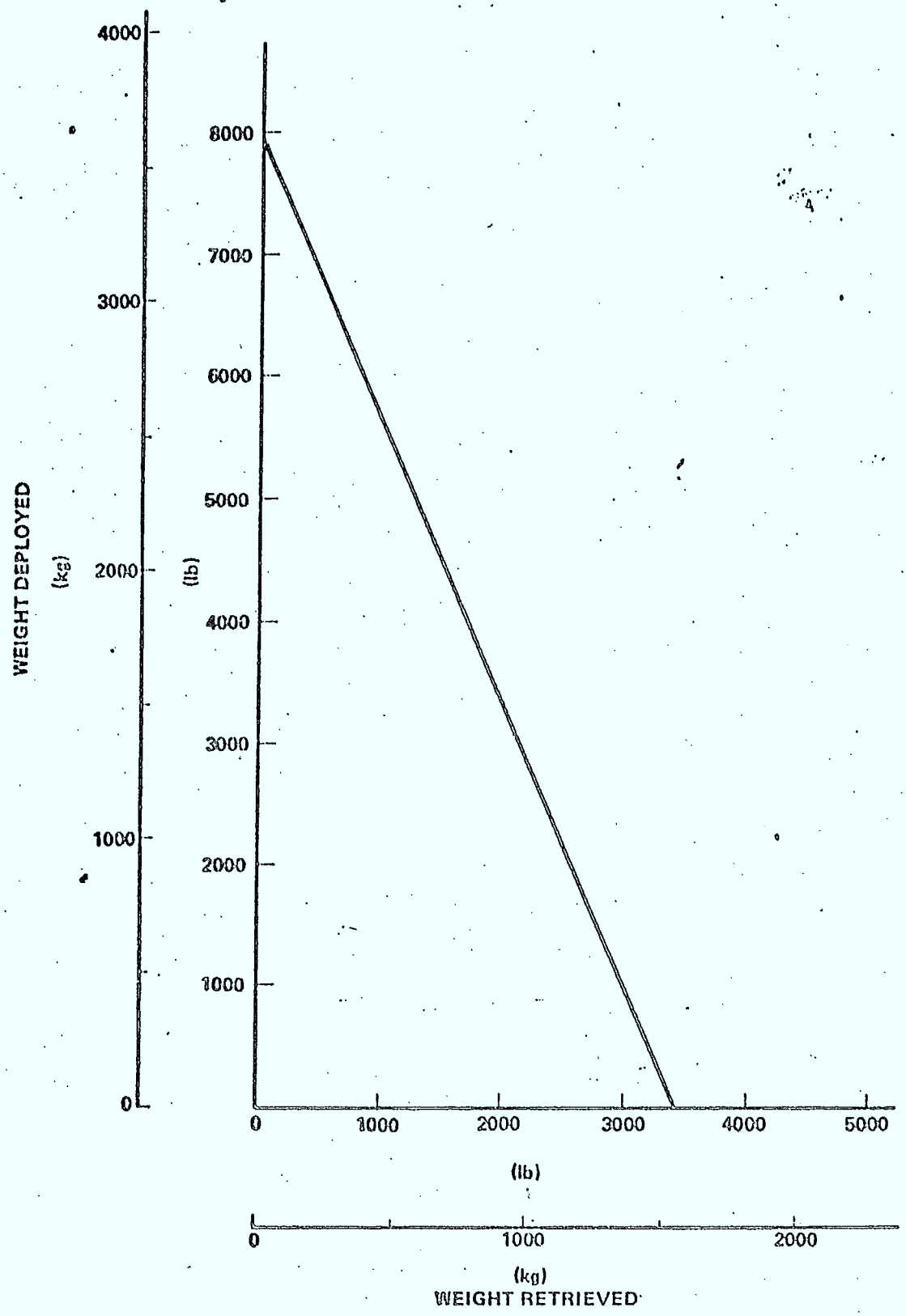

Space Tug roundtrip capability to geosynchronous orbit.

Fig 3-4
(Rev 1.7 Page 24)

3.3 Integral AKM/PKM Stage

Recent studies carried out by Hughes Aircraft Corporation and Aerospace Corporation for NASA on cost competitive transportation systems from Shuttle to geosynchronous orbits, have generated an interesting concept that essentially amounts to an alternative to the IUS for orbital transfer for certain payloads. The concept has the following features:

- Solid propellant Perigee Kick Motor (PKM) and Apogee Kick Motor (AKM) attached to the spacecraft.
- Attached to the Shuttle Orbiter by a cradle (similar to the SPMS cradle).
- Tilted in the payload bay on reaching Shuttle orbit; spun up by an electric spin table attached the orbiter; aligned by means of the Orbiter attitutde control system; sprung release from the spin table with a delta V of 4 ft/sec; PKM fired when on-board timer indicates equitorial crossing (approximately 13 minutes after jettison for Delta class payloads).
- Requires active nutation damping because of the poor moment of inertia ratio prior to PKM firing.
- PKM jettisoned.
- AKM fired at apogee (synchronous orbit altitude).
- AKM capable of being jettisoned if required (for use of the aft face of the spacecraft).
- Typically two spacecraft per cradle, each with its own separate spin table (mounted in the Shuttle in an over/under configuration for CG landing requirements.

- The design assumes no evasive manoeuvres are required by the orbiter.

- Spacecraft RCS fuel required for correction of PKM/Shuttle attitude errors (approximately 5.7% payload weight in fuel as compared to 3.4% presently budgeted for correction of equivalent Delta third stage firing).

HAC indicated they felt that:

- an Orbiter mounted spin table is more cost effective than a spin-up system employing spacecraft RCS thrusters with the spacecraft being deployed from the Orbiter by the RMS prior to spin-up.

- The above concept employs greater flexibility for the spacecraft integrator for tailoring the orbit transfer device to meet his particular requirements and schedule.

- More cost effective for the user than purchasing an IUS from NASA as it is felt that government involvement will lead to increased costs.

- It eliminates interface problems with payloads sharing an IUS ride.

- Most importantly, if the PKM is the equivalent stage of an existing launch vehicle, the spacecraft/AKM/PKM system will be compatible with the Shuttle or with a standard launch vehicle.

It is understood that NASA are extremely interested and will be awarding study contracts to further investigate the concept.

4.0 STS PROGRAM RESPONSIBILITIES

4.1 NASA

The National Aeronautics and Space Administration is responsible for the development of the Space Shuttle and the Tug.

NASA centers having major reponsibility on the STS program are:

- NASA Headquarters (Space Shuttle Program Office) provides overall direction for the Shuttle program. This office is responsible for the detailed assignment of reponsibilities, basic performance requirements, control of major milestones and funding allocations to the various NASA field centers.

- Johnson Space Center (JSC) is the lead center and as such has program management responsiblity for program control, overall systems engineering and systems integration, and overall responsibilty and authority for definition of those elements of the total system than interact with other elements, such as total configuration and combined aerodynamic loads. It is also responsible for the development, production, and delivery of the Shuttle orbiter and manages the contract with Rockwell International Space Division.

- Kennedy Space Center (KSC) is responsible for the design of the launch and recovery facilities.

- Marshall Space Flight Center (MSFC) is responsible for the development, production and delivery of the orbiter main engine, the solid rocket booster and the hydrogen oxygen propellant tank.

4.2 DOD

The U.S. Department of Defence (DOD) is committed to supporting the development of the Space Shuttle. The United States Air Force, Space & Missiles Systems Organization (USAF SAMSO), as executive agent for the DOD is charged with working with NASA to develop a space Shuttle that will have utility to the DOD. USAF SAMSO is also responsible for the development and funding of the IUS, which it is essentially tailoring to meet its own requirements.

Vandenburg Air Force Base (VAFB) will be updated to provide facilities equivalent to those at Kennedy Space Center for high inclination missions, and the Air Force will be responsible for activities at the base.

DOD flights from JSC will have a USAF Mission Director responsible for the overall flight until the payload is deployed.

4.3 U.S. Industry

The space division of Rockwell International is the prime contractor to NASA for total integration of the Space Shuttle system.

Major subcontractors and their hardware responsibilities are presented in Figure 4-1. As indicated, the list of subcontractors is still growing (in excess of 130).

Rockwell International

SPACE SHUTTLE CONTRACTORS

The Space Division of Rockwell International is prime contractor to NASA for total integration of Space Shuttle systems, including all systems being produced by associate contractors.

ASSOCIATE CONTRACTORS
(CONTRACTS WITH NASA)

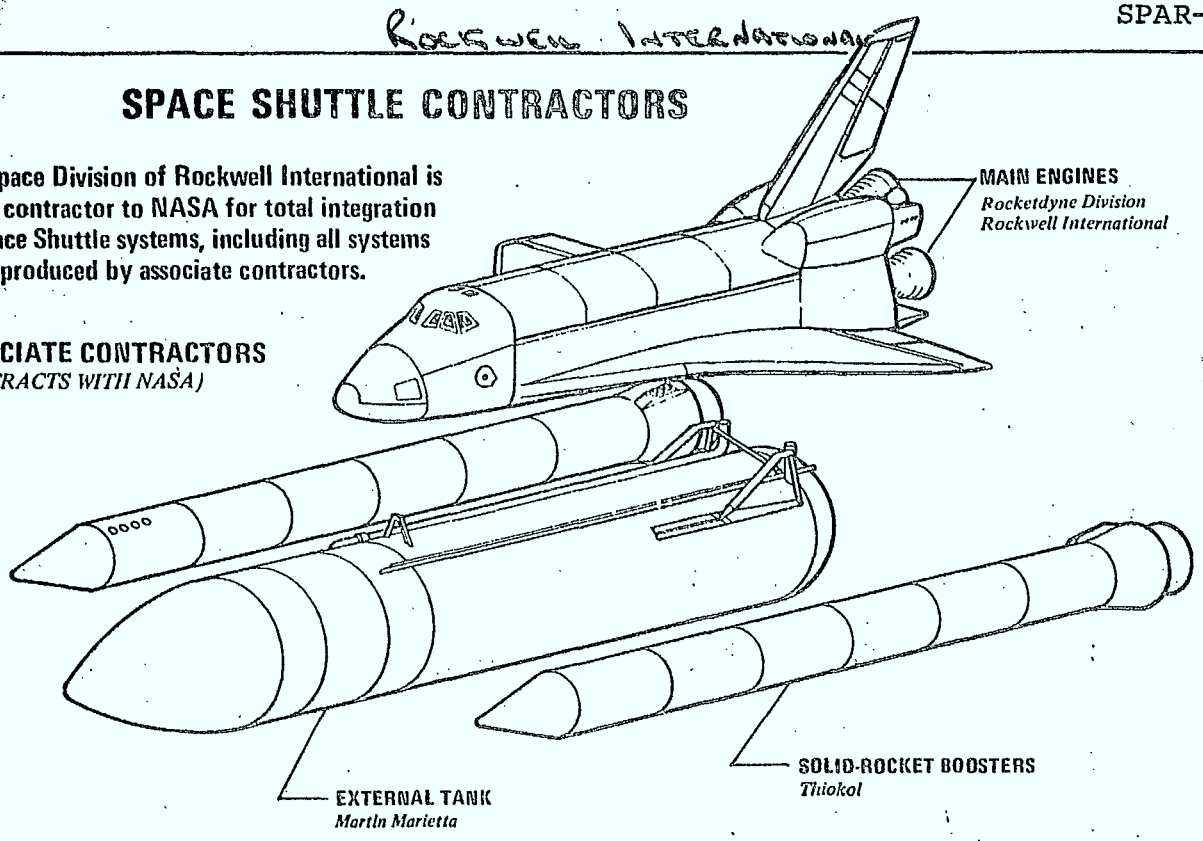

The Space Division is also prime contractor to NASA for designing, developing, and building the Space Shuttle orbiter.

ORBITER SUBCONTRACTORS
(CONTRACTS WITH SPACE DIVISION)

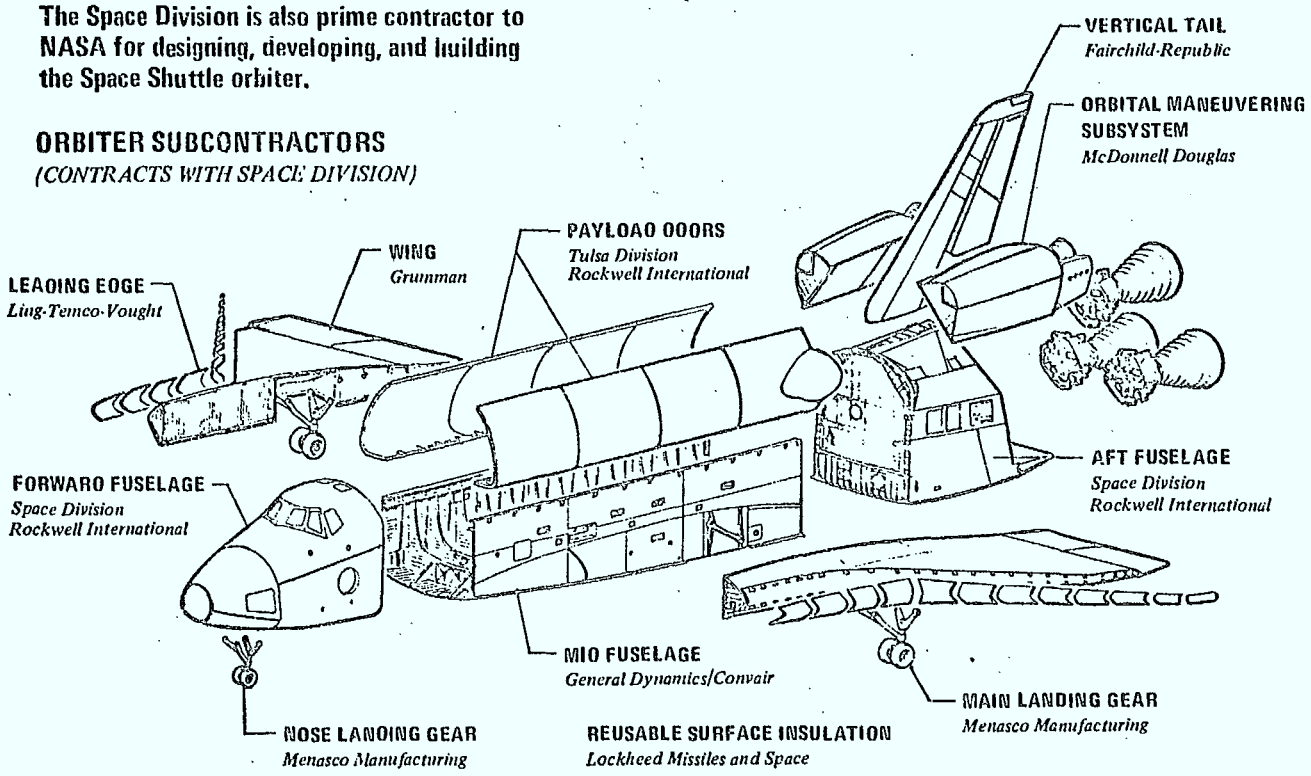

These illustrations do not indicate all Space Shuttle subcontractors selected, nor have all Space Shuttle subcontracts been awarded.

FIG 4-1

4.4 Non-U.S. Participants

4.4.1 Canada

Canada, in an agreement with NASA will develop at its own expense the Remote Manipulator Systems (RMS) for the Space Shuttle. The RMS will allow astronauts inside the orbiter to deploy and retrieve payloads to and from the orbiter. See Figure 2-31.

Canada will fund development of the RMS and provide the first flight unit to NASA without charge. Canada will supply flight units for outfitting the follow-on Orbiters. Costs to the U.S. for these units will not include any charge for Canada's research and development.

Canada will deliver the first flight unit in 1979 for use on early Shuttle flights scheduled to begin mid-1979.

4.4.2 ESRO

In a similar agreement to that between NASA and Canada, the European Space Research Organization will develop with its own funds, the Spacelab for use on the Space Shuttle.

Spacelab is a large pressurized module with an external equipment pallet(s). It will permit the conduct of experiments in an environment that only space flight can provide i.e., long term gravity free environment, hard vacuum (if mounted on pallet), earth observation and atmospheric free astronomy, at the same time not requiring experiments to be committed to conventional, expensive, fully automated spacecraft.

Spacelab program responsibilities are identified in Figure 4-2.

Spacelab Program Division of Responsibilities

(PER MEMORANDUM OF UNDERSTANDING SIGNED BY NASA AND THE EUROPEAN SPACE RESEARCH ORGANIZATION (ESRO) ON SEPT. 24, 1973)

NASA, WITH THE MARSHALL SPACE FLIGHT CENTER AS LEAD CENTER, WILL ESTABLISH PROGRAM REQUIREMENTS, ESTABLISH AND MAINTAIN PROGRAM INTERFACES, ESTABLISH DIRECT WORKING RELATIONSHIP WITH ESRO, DEVELOP AND MAINTAIN PERIPHERAL AND ANCILLARY EQUIPMENT, BE RESPONSIBLE FOR INTEGRATED SCIENCE AND APPLICATION MISSION PLANNING, SYSTEMS INTEGRATION, EXPERIMENT INTEGRATION, EXPERIMENT OPERATOR TRAINING, AND OPERATIONS, REFURBISHMENT, AND OVERHAUL.

ESRO WILL DESIGN, DEVELOP AND TEST SPACELAB; PRODUCE AND DELIVER TO NASA ONE ENGINEERING MODEL, ONE FLIGHT UNIT WITH SPARES, AND TWO SETS OF GROUND SUPPORT EQUIPMENT; PROVIDE ENGINEERING POST-DEVELOPMENT SUPPORT, AND PROVIDE FOLLOW-ON PRODUCTION.

THE NASA/ESRO AGREEMENT REPRESENTS A MAJOR STEP IN THE SHARING OF SPACE COSTS BETWEEN THE UNITED STATES AND EUROPEAN COUNTRIES. THE ESTIMATED COST OF $300 TO $400 MILLION FOR SPACELAB WILL BE BORNE BY THE NINE COUNTRIES INVOLVED—BELGIUM, DENMARK, FRANCE, GERMANY, ITALY, THE NETHERLANDS, SPAIN, SWITZERLAND, AND THE UNITED KINGDOM.

CURRENT PLANNING CALLS FOR THE FIRST OPERATIONAL FLIGHT OF THE SPACELAB TO TAKE PLACE IN EARLY 1980. TO PERMIT ADEQUATE TIME FOR EXPERIMENT INTEGRATION, CHECKOUT, AND COMPATIBILITY TESTING, THE SPACELAB UNIT WILL BE DELIVERED ONE YEAR BEFORE THE FIRST MISSION.

FOLLOWING ESRO DELIVERY OF THE SPACELAB, NASA WILL MANAGE ALL OPERATIONAL ACTIVITIES, INCLUDING CREW TRAINING AND FLIGHT OPERATIONS. EUROPEAN FLIGHT CREW OPPORTUNITIES WILL BE PROVIDED IN CONJUNCTION WITH FLIGHT PROJECTS SPONSORED BY ESRO OR BY GOVERNMENTS PARTICIPATING IN THE SPACELAB PROGRAM. IT IS CONTEMPLATED THAT THERE WILL BE A EUROPEAN MEMBER OF THE FLIGHT CREW FOR THE FIRST SPACELAB MISSION.

DESIGN REQUIREMENTS FOR SPACELAB CALL FOR AN OPERATIONAL LIFETIME OF 50 MISSIONS OR FIVE YEARS, WHICHEVER IS REACHED FIRST. NOMINAL MISSION DURATION IS SEVEN DAYS, BUT SPACELAB IS TO BE DESIGNED SO THAT EXTENDED MISSIONS OF UP TO 30 DAYS CAN BE COMPLETED WITH NO MAJOR CHANGES IN SYSTEM OR SUBSYSTEM DESIGN.

AN INDUSTRIAL CONSORTIA, HEADED BY ERNO-VFW-FOKKER WAS NAMED BY ESRO IN JUNE, 1974, TO BUILD THE SPACELAB. THE SIX-YEAR CONTRACT CALLS FOR THE DELIVERY OF THE FIRST FULLY-QUALIFIED SPACELAB FLIGHT UNIT BY APRIL, 1979.

FIG 4-2 (PAGE 1.5 PAGE 35)

5.0 LAUNCH VEHICLE CONSIDERATIONS - SHUTTLE ERA

One of the more important tasks of the study was to determine the cost and availability of both the STS and conventional launch vehicles (particularly the Delta launch vehicle) for Canadian payloads during the Shuttle era.

Unfortunately, due to the considerable state of flux of STS planning, little official information was available. The information presented in Figures 5-1 through 5-3 were obtained from U.S. organizations engaged in STS studies for NASA and DOD, and represents the probable approach/policy that will be adopted by NASA on launch vehicle cost and availability.

5.1 Projected Lauch Vehicle Costs

Information contained in Figure 5-1 was obtained from Hughes Aircraft Corporation (C. Richard Jones - Associate Division Manager). It was generated by HAC as input for a study of a cost competitive transportation system from Shuttle to geosynchronous orbit. The spread in cost for the Shuttle is an indication of the degree of uncertainty in NASA's Shuttle user charge policy, however, the upper value is a reasonable indication of costs to non-U.S. customers.

Information on the cost of the Delta 3914 vehicle is based on a semi-official quote to DOC from NASA.

It is readily obvious from the graph that if the Shuttle load factor is reasonably high (in excess of 50%) it becomes a very cost competitive transportation system.

It should be noted that the STS is capable of delivering roughly 6 GPB class spacecraft to geosynchronous orbit.

Figure 5-2 indicates general launch cost reimbursement equations provided by NASA for use in space-

craft servicing studies. They indicate NASA's present thinking regarding payload sharing of the STS - user charge being a function of payload weight and length, and Shuttle load factor.

PROJECTED LAUNCH VEHICLE COSTS. (H.A.C.)

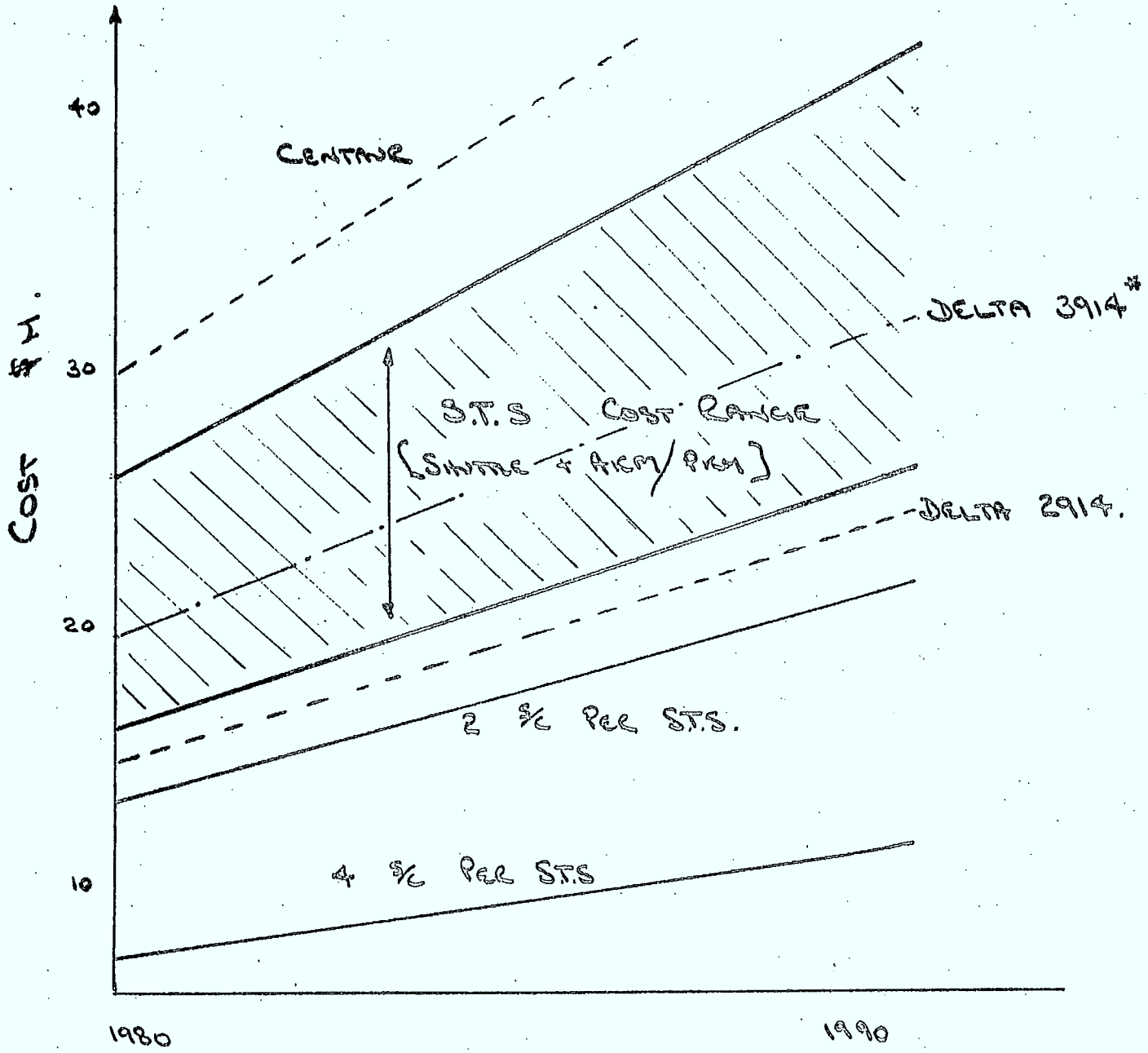

BASED ON :

- SHUTTLE ORBITER COST OF $ 10.5M '71.
- $ 1M / SPACECRAFT FOR AKM/PKM STAGE.
- 5% INFLATION RATE.

* DOC/NASA DATA (WITH 5% INFLATION RATE).

FIG 5-1

LAUNCH COST REIMBURSEMENT POLICY EQUATIONS

CHARGE	ORBITER	TUG
PL UP	$\mathrm{Mx}\left[f_1, f_2\right] \dfrac{C\ orb}{\lambda_{orb}}$	$f_5 \dfrac{C\ tug}{\lambda_{tug}}$
PL DOWN	$\mathrm{Mx}\left[f_3, f_4\right] \dfrac{C\ orb}{\lambda_{orb}}$	$f_6 \dfrac{C\ tug}{\lambda_{tug}}$

$$f_1 = \frac{\text{PL up wt}}{\text{PL up wt capability + PL dn wt capability}}$$

$$f_2 = \frac{\text{PL up length}}{\text{PL up length capability + PL dn length capability}}$$

$$f_3 = \frac{\text{PL dn wt}}{\text{PL up wt capability + PL dn wt capability}}$$

$$f_4 = \frac{\text{PL dn length}}{\text{PL up length capability + PL dn length capability}}$$

$$f_5 = \frac{\text{PL up wt}}{\text{PL up wt capability}}$$

$$f_6 = \frac{\text{PL dn wt}}{\text{PL dn wt capability}}$$

C_{orb} = \$12.0M

C_{tug} = \$1.1M

λ = load factor

Fig 5.2 (See 1.9 page)

5.2 Standard Launch Vehicle Phase-out

Again, little official information on the details of launch vehicle phase-out was obtained except that it was learned that both NASA and DOD are committed to the phase-out of conventional launch vehicles and have each set up "Phase-out Task Teams" to address the subject.

Information received from Aerospace Corporation (R. Wolfe) and later corroborated by McDonnell Douglas indicated the following regarding Delta launch vehicle flight planning:

1979	-	Ten flights planned
1980	-	Fourteen flights planned
1981	-	Five flights planned
1982	-	No flights planned
1983	-	One flight planned
1984 & onwards	-	One flight planned

The pad would probably be kept active for one more year, beyond 1984, with one to two vehicles being held in reserve.

5.3 Shuttle Launch Access Provisions

The only source of information regarding launch access provisions for Canadian payloads during the Shuttle era was obtained from the Shuttle Remote Manipulator System Memorandum of Understanding (MOU) which indicated the following:

"Space Shuttle Availability and Preferred Access to Participants ...

Premature to define ultimate terms and conditions ... expect the following principles will apply":

- The STS will be available on a cooperative (non-cost) or cost reimbursable basis - consistent with October 9, 1972, Statement of U.S. policy on launch assistance provisions.

2/CDR/25

- For reimbursable space missions, (automated, free flying spacecraft), Canada will be given preference over non-STS participating countries.

- Spacelab payloads will be selected on the basis of merit.

- Canada will be given preference over non-STS participating countries for Spacelab payloads provided the Canadian payload is of equal merit.

- Business as usual up to the time that only Space Shuttle services are available.

NASA is presently conducting studies to determine its policy regarding the use of the STS and how it might maximize capture of potential payloads. Apparently, NASA is being consistently informed of the concern of potential users (particularly those in the cost reimbursable launch category) regarding:

- Cost

- Restricted launch schedule flexibility due to schedule compatability requirements with accompanying payloads.

- Greater restrictions on payload than experienced with current launch system.

NASA's "Space Shuttle User Charge Working Group" is currently conducting studies to hopefully resolve these concerns.

6.0 SHUTTLE IMPACT ON SPACECRAFT DESIGN

6.1 Shuttle Induced Environments

During ground transportation the payload environment is relatively benign. (Temperature in payload processing areas 24 ± 1°C. Temperature in orbiter with doors closed, controllable with air or GN2 purge to ± 1°C., within range 7°C. to 49°C. Shock, acceleration and vibration environments are not design critical.)

Salt spray, humidity, sand/dust environments are however relatively severe during ground operations. Minimising the effect of these on payload design is currently the subject of much discussion.

The following are flight environments currently specified in NASA JSC 07700 Vol. XIV "Space Shuttle System Payload Accommodations".

6.1.1 Pressure

Launch and re-entry pressure profiles for the orbiter payload bay are presented in FIG. 6-1 and 6-2 respectively. The Delta 2914 pressure profile used in the design of the CTS (sketched in FIG. 6-1) shows a slightly more severe environment for a Delta launch.

6.1.2 Vibration

Estimated random vibrations for the cabin and mid fuselage payload interface due to fluctuating pressure loads are shown in Fig. 6-3.

Re-entry vibration environment is negligable.

6.1.3 Acoustics

Estimated payload bay and cabin acoustic spectra generated by the engine exhaust and by aerodynamic noise during atmospheric flight is shown in Fig. 6-4. Estimated time history of the payload bay and cabin overall internal noise during atmospheric flight is shown in Fig. 6-4.

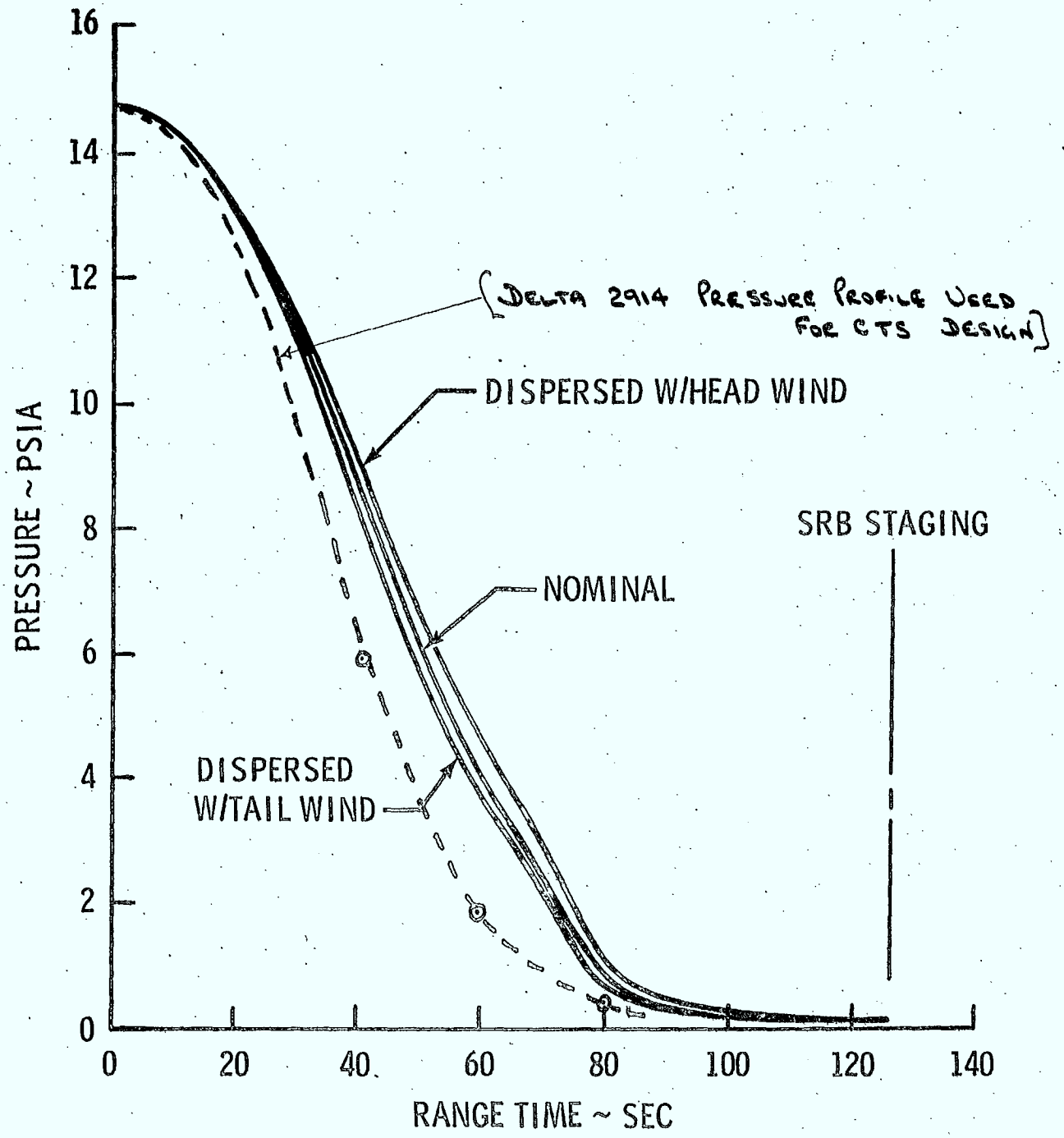

ORBITER PAYLOAD BAY INTERNAL PRESSURE HISTORIES DURING ASCENT

FIG 6-1
(REF 1.6 PAGE 4-16)

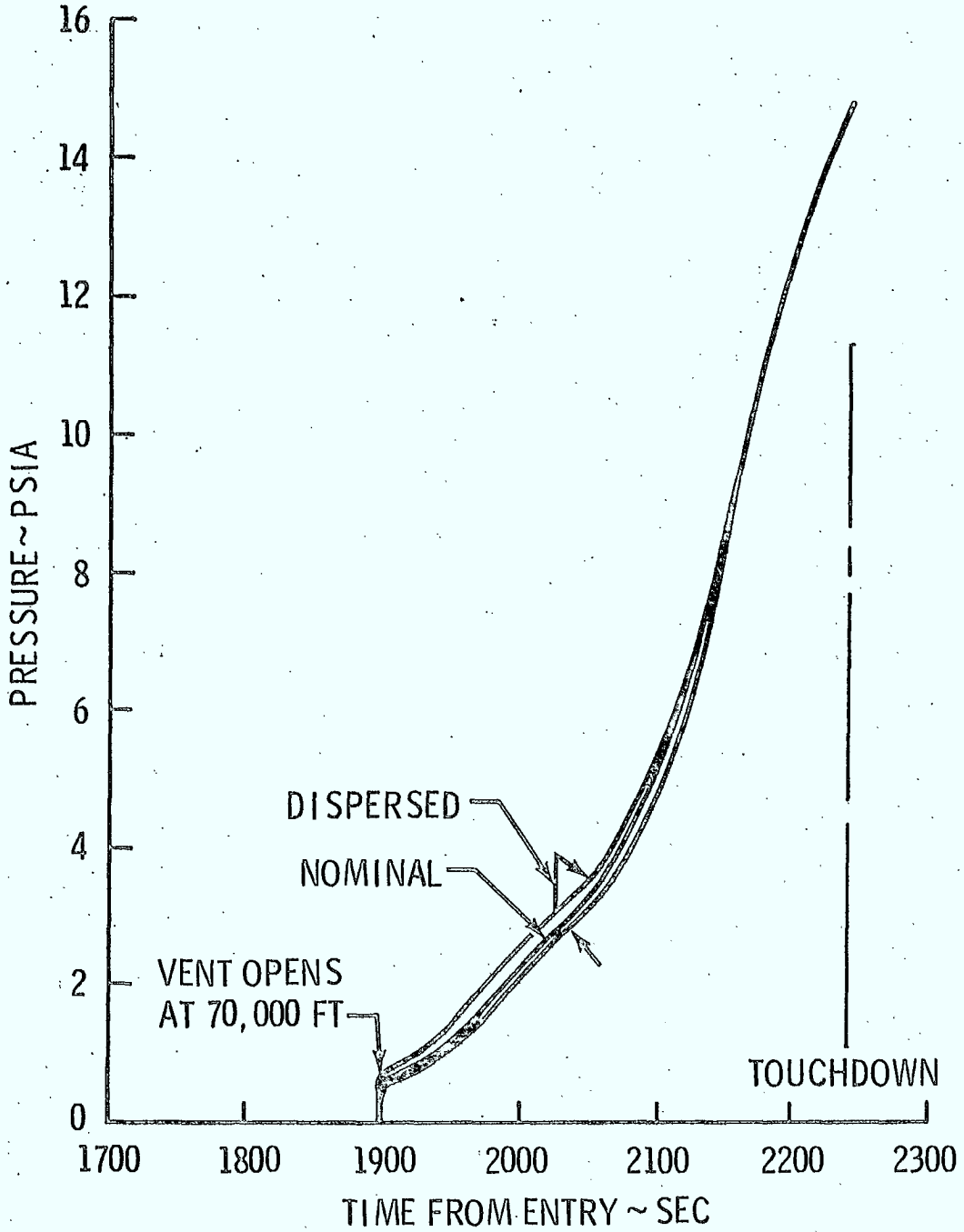

ORBITER PAYLOAD BAY INTERNAL PRESSURE
HISTORIES DURING ENTRY

FIG 6-2
(REF 1.6 PAGE 4-17)

ACTUAL VIBRATION INPUT TO PAYLOADS WILL DEPEND ON TRANSMISSION CHARACTERISTICS OF MIDFUSELAGE - PAYLOAD SUPPORT STRUCTURE AND INTERACTIONS WITH EACH PAYLOAD'S WEIGHT, STIFFNESS, AND C.G.

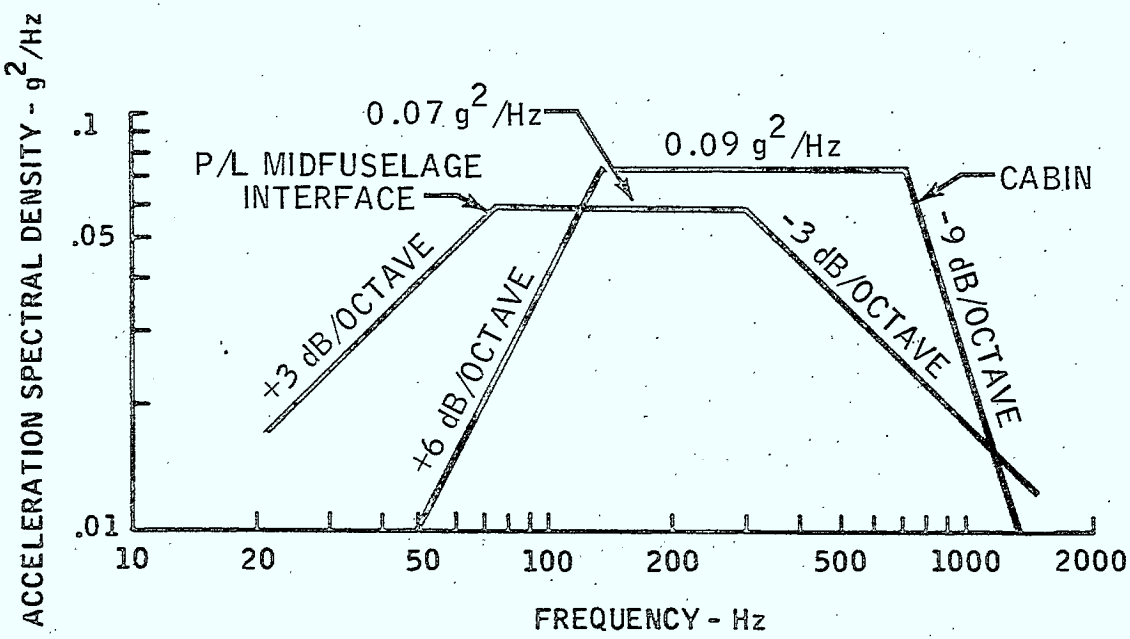

THESE LEVELS ARE TYPICAL OF LIFTOFF, TRANSONIC AND MAX Q FLIGHT

Random vibration at payload midfuselage interface and in cabin

Fig 6-3 (Ref 1.6 Page 4-19)

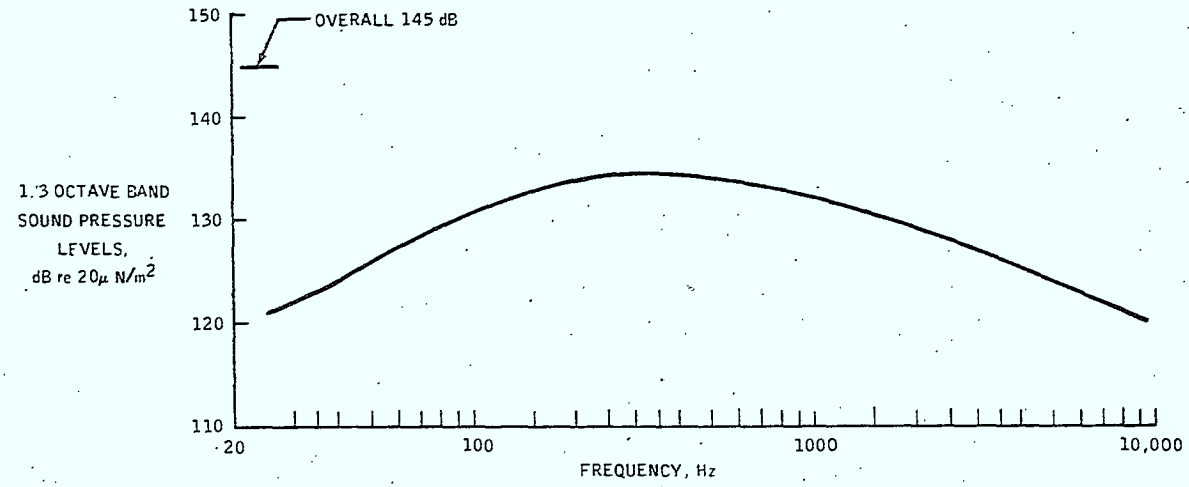

Analytical predictions maximum orbiter payload bay internal acoustic spectra

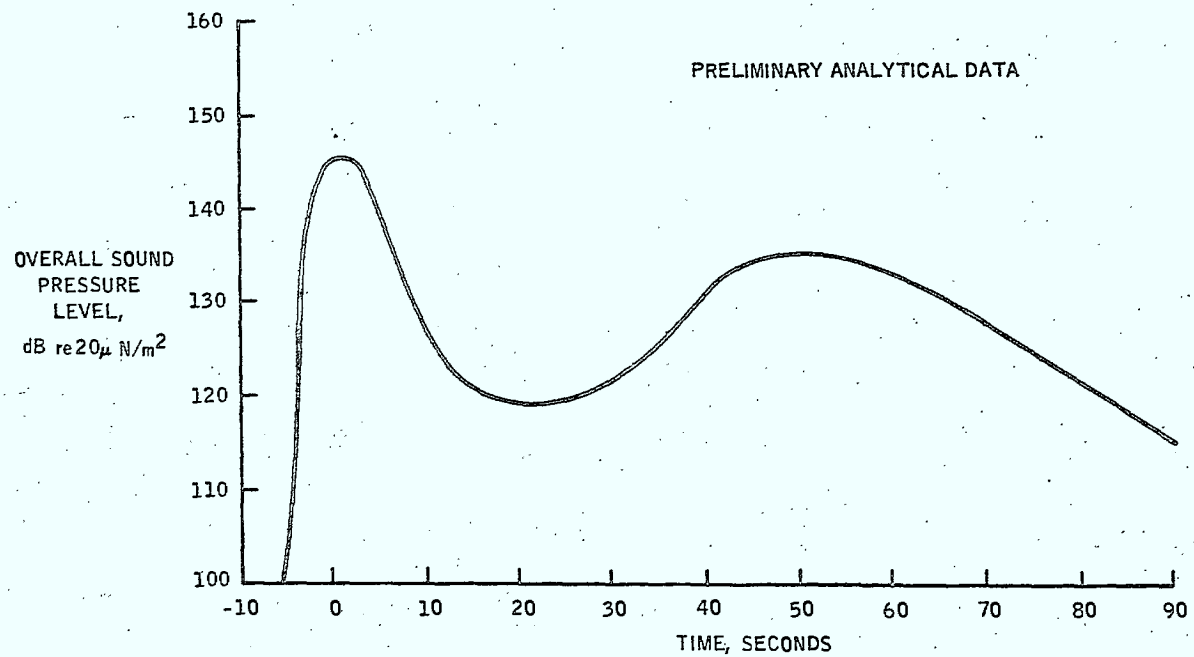

Orbiter payload bay internal acoustic time history

Fig. 6-4 (Rev 1.6 Page 4.20)

6.1.4 Acceleration

The accelerations experienced by the spacecraft mounted within the Shuttle payload bay are given in Fig. 6-5.

It should be noted that whereas the values refer to limit accelerations, the crash conditions are ultimate, also that the dynamic response of the payload to transients included in the ascent and landing conditions has not been allowed for.

These accelerations should be compared with the Delta launch vehicle accelerations used for the design of the General Purpose Spacecraft Bus and given in Fig. 6-6.

The following observations are made for the purpose of facilitating comparisons:

(a) The spacecraft is mounted in the Shuttle payload bay with the thrust axis along the Shuttle X-axis, its forward platform pointing in the Shuttle ascent and flight direction. Hence positive X-accelerations given in Fig. 6-5 will produce spacecraft inertia forces acting forward. Such inertia forces would be associated with negative Delta launch accelerations.

(b) Shuttle Y and Z accelerations will produce spacecraft lateral inertia loads.

(c) Shuttle "limit" and Delta launch "qualification level" accelerations are equivalent concepts, implying no yielding of the structure, although spacecraft designers have placed additional safety factors on qualification loads in order to ensure compliance with a high level of confidence.

(d) Shuttle and General Purpose Spacecraft Bus "ultimate" accelerations are identical concepts, implying no failure of the structure, and are obtained by multiplying the limit loads by a safety factor. In the case of the General Purpose Spacecraft Bus this factor is 1.25.

Further comments arising from comparing the impact of the Shuttle and Delta launch vehicle accelerations on the spacecraft structure design are given in section 6.2.

Cargo Limit Design Accelerations
For 65 KLB Up And 32 KLB Down

CONDITION	LINEAR - g			ANGULAR - RAD/SEC²		
	X	Y	Z	X-X	Y-Y	Z-Z
Lift-off	-0.1 -2.9	+1.0 -1.0	+1.5 -1.5	+0.10 -0.10	+0.15 -0.15	+0.15 -0.15
High-Q Boost	-1.6 -2.0	+0.5 -0.5	+0.6 -0.6	+0.10 -0.10	+0.15 -0.15	+0.15 -0.15
Boost-Max. LF (Stack)	-2.7 -3.3	+0.2 -0.2	-0.3 -0.3	+0.20 -0.20	+0.25 -0.25	+0.25 -0.25
Boost-Max. LF (Orb Alone)	-2.7 -3.3	+0.2 -0.2	-0.75 -0.75	+0.20 -0.20	+0.25 -0.25	+0.25 -0.25
Entry and Desc Pitch Up	+1.06 -0.02	0 0	+2.5 -1.0	+0.25 -0.25	+0.75 -0.75	+0.30 -0.30
Entry and Desc Yaw	+0.75 +0.75	+1.25 -1.25	+1.0 +1.0	+0.25 -0.25	+0.30 -0.30	+0.75 -0.75
Landing	+1.0 -0.8	+0.5 -0.5	+2.8 +2.2	+0.25 -0.25	+1.25 -0.75	+0.30 -0.30
Crash	+9.00 -1.5	+1.50 -1.50	+4.5 -2.0			
Crash (Crew Compartment Interior)	+20.0 -3.3	+3.3 -3.3	+10.0 -4.4			

Sign convention follows that of the Orbiter coordinate system in Figure 2-5. Angular accelerations follow the right hand rule.

Crash accelerations are ultimate.
The longitudinal accelerations are directed in all afterward azimuths within a cone of 20 degrees half-angle. The specified accelerations shall operate separately.

Crash landing loads shall be carried through the payload support fittings and their attachment fasteners only. Support structure shall be designed to withstand the fastener loads locally.

Ascent and landing conditions include dynamic transients effects but do not include the dynamic response of the payload.

Fig 6-5
(Ref 1.6 Page 7-11/12)

DELTA LAUNCH VEHICLE ACCELERATION USED IN GPB DESIGN.

Quasi-Static Loads

POGO + MECO : 16 g qual. axial (thrust)

± 1 g qual. lateral

Maximum Lift-Off : 3.9 g qual. axial (thrust)

± 2.8 g qual. laterial

Sinusoidal Vibration Loads

Qualification level inputs at base of spacecraft adapter:

Input Axis	Frequency (Hz)	Input Acceleration (g's)
	5 - 10	2.3
	10 - 15	2.3
Thrust	15 - 21	6.8
	21 - 250	2.3
	250 - 400	4.5
	400 - 2000	7.5
	5 - 10	2.0
	10 - 14	2.0
Lateral	14 - 250	1.5
	250 - 400	4.5
	400 - 2000	7.5

- Notching to Quasi-Static levels allowed at:

  1st spacecraft laterial mode (3 g at Centre of Mass)
  1st spacecraft axial mode (16 g maximum response)

  The above must be overall spacecraft modes

FIG 6-6

6.1.5 Shock

Shock experienced by the payload is divided into four categories:

(a) Pyro Shock

Yet TBD. Pyro shocks are usually of local nature. Data from similar systems analysis, if necessary, but principally tests of the system are the basis for design.

(b) Landing Shock

A spectrum from 0.23g. for 170 milliseconds through 1.50g. for 260 milliseconds duration is given. The g-levels are relatively mild compared to the bench handling shocks.

(c) Crash Safety Shock

A 40g. ± 6g. sawtooth for 11 milliseconds duration. This shock applies to equipment mounting only and not for payload primary structure.

(d) Transient Vibration

A swept sinusoid vibration environment in the frequency range from 5 to 35 Hz. at ±0.25g. peak representing, until more precise information becomes available, a number of events associated with Shuttle flight and resulting in low frequency transient responses in the Space Shuttle vehicle.

6.1.6 Thermal Environment

Thermal environmental data is presented in Figs. 6-7 through 6-10, for the case of no payload present in the payload bay and for the case of an infinite sink (21°C) payload in the bay. These are provided only as a guide for payload thermal design. The actual environment for any specific payload will be a function of the payload thermal properties as well as Orbiter thermal properties and may require interactive thermal analysis with the Orbiter.

Potential problems exist with :

- on-orbit environment, with maximum solar input to spacecraft and payload bay particularly if any thermal dissipation occurs in the spacecraft components (Fig. 6-7. Top to sun Orbiter orientation.

- re-entry environment, with convective (and radiative) heating of the payload. (Figs. 6-8 through 6-10.)

6.1.7 EMI/EMC

Not yet specified.

6.1.8 Contamination

The payload bay will be designed to minimize contamination of payload and critical payload bay surfaces to a level compatible with mission objectives and will be designed to protect these surfaces from contamination by the external environment, through the use of filters in the payload bay liner, during any closed payload bay door operational phase. (Will prevent transfer of particulates greater than 35 microns GBR.)

When on-orbit, RCS thruster firing operations will avoid contamination, particularly when the payload bay doors are open. Thruster exhausts will be designed and controlled in operation to minimize direct impingement or reflection upon the deployed or released payload.

During re-entry the payload bay will be pressurized using filtered atmospheric air (35 micron glass beading rating). No control of humidity or concentration of other gases will be provided by the orbiter.

Postlanding operations will feature closed payload bay purging one half-hour after touchdown.

DATA POINT LOCATION

(See Figure 14-4)

PORT STBD

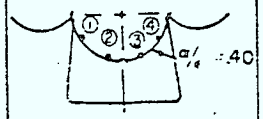

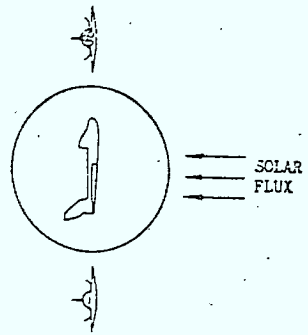

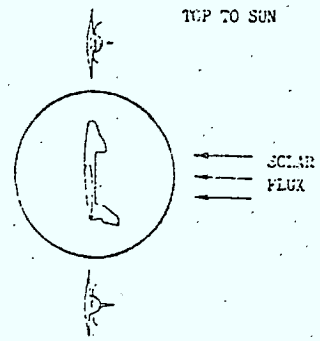

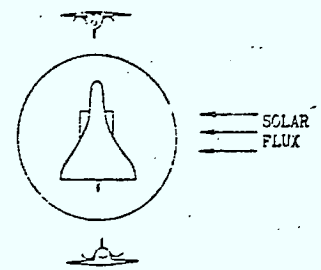

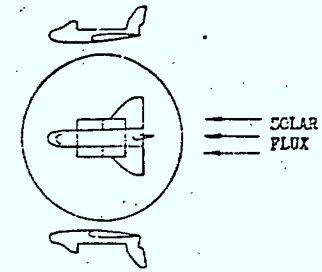

	BOTTOM TO SUN		TOP TO SUN		PORT SIDE TO SUN		TAIL TO SUN	
	T	Q	T	Q	T	Q	T	Q
X = 582 TO 760								
1	-117 (-82.78)	2.015 (0.6357)	171 (77.22)	48.851 (15.4111)	-6 (-21.11)	19.384 (6.1151)	-210 (-134.44)	0.0
2	-111 (-79.44)	3.608 (1.1382)	209 (98.33)	72.864 (22.9865)	+3 (-16.11)	23.546 (7.4281)	-215 (-137.22)	0.0
3	-105 (-76.11)	8.871 (2.7985)	198 (92.22)	66.688 (21.0381)	+4 (-15.56)	23.643 (7.4587)	-212 (-135.56)	0.0
4	-47 (-43.89)	16.101 (5.0794)	150 (65.56)	37.568 (11.8576)	-3 (-19.44)	19.722 (6.2217)	-210 (-134.44)	0.0
X = 760 TO 919								
1	-130 (-90.00)	2.445 (0.7713)	156 (68.89)	51.360 (16.2026)	-10 (-23.33)	23.354 (7.3675)	-214 (-136.67)	0.0
2	-125 (-87.22)	4.354 (1.3736)	188 (86.67)	73.155 (23.0783)	0 (-17.78)	28.718 (9.0597)	-244 (-153.33)	0.0
3	-87 (-66.11)	10.690 (3.3724)	175 (79.44)	64.989 (20.502)	-7 (-21.67)	26.805 (8.4562)	-244 (-153.33)	0.0
4	-58 (-50.00)	16.026 (5.0557)	130 (54.44)	37.564 (11.8503)	-8 (-22.22)	23.728 (7.4855)	-235 (-148.33)	0.0
X = 919 TO 1191								
1	-150 (-101.11)	2.421 (0.7638)	163 (72.78)	52.279 (16.4925)	-10 (-23.33)	23.058 (7.2741)	-283 (-175.00)	0.0
2	-143 (-97.22)	4.340 (1.3691)	194 (90.00)	73.440 (23.1682)	-1 (-18.33)	28.264 (8.9165)	-296 (-182.22)	0.0
3	-100 (-73.33)	10.632 (3.3541)	180 (82.22)	65.552 (20.6797)	0 (-17.78)	28.378 (8.9524)	-294 (-181.11)	0.0
4	-70 (-56.67)	15.855 (5.0018)	137 (58.33)	38.629 (12.1863)	-7 (-21.67)	23.438 (7.3940)	-280 (-173.33)	0.0
X = 1191 TO 1307								
1	-150 (-101.11)	1.834 (0.5786)	166 (74.44)	46.532 (14.6797)	0 (-17.78)	23.120 (7.2937)	-281 (-173.89)	0.0
2	-132 (-91.11)	3.203 (1.0105)	200 (93.33)	70.737 (22.3155)	-9 (-22.78)	21.555 (6.8000)	-250 (-156.67)	0.0
3	-87 (-66.11)	10.520 (3.3188)	181 (82.78)	65.186 (20.5643)	-10 (-23.33)	21.674 (6.8375)	-248 (-155.56)	0.0
4	-80 (-62.22)	11.695 (3.6894)	170 (76.67)	48.046 (15.1571)	-16 (-26.67)	17.773 (5.6069)	-273 (-169.44)	0.0

T - TEMPERATURE — °F (°C)

Q - ORBITAL AVE. ABS. SOLAR + EARTH HEAT FLUX, - Btu/hr - sq ft - (Watts/sq cm x 10^{-3})

On-orbit thermal environment empty payload bay

(Reg 1.6 Fig 6-7 Page 4-33)

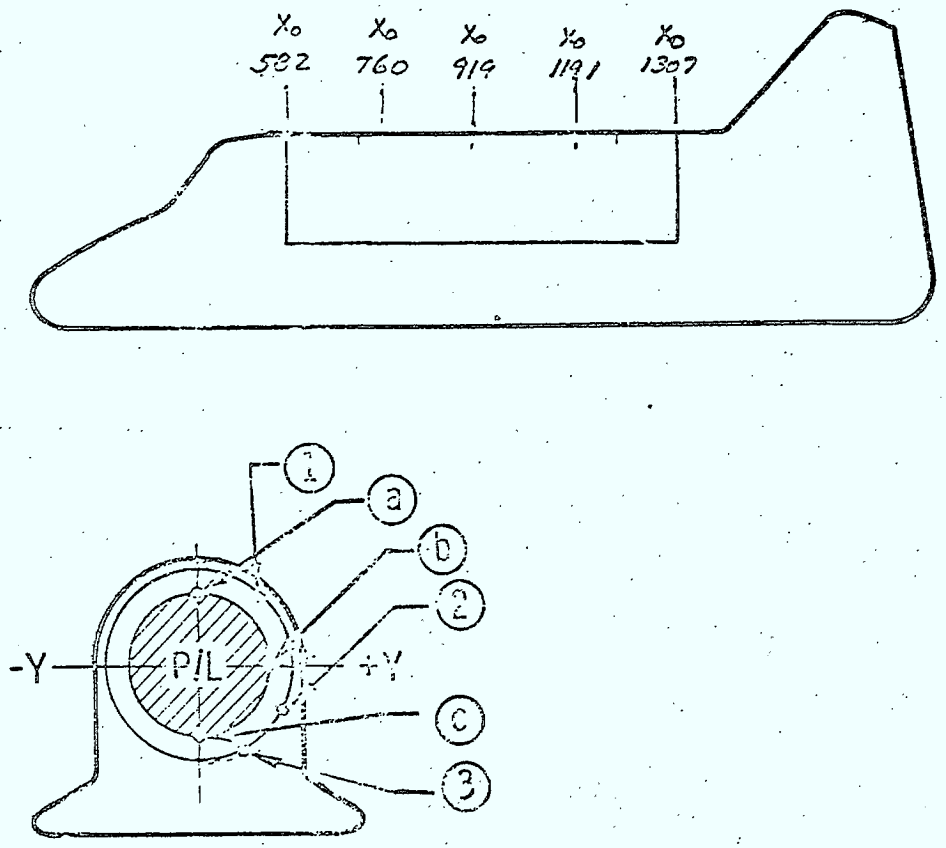

Payload bay wall and payload data point location

FIG 6-8
(REF 1.6 PAGE 4.25)

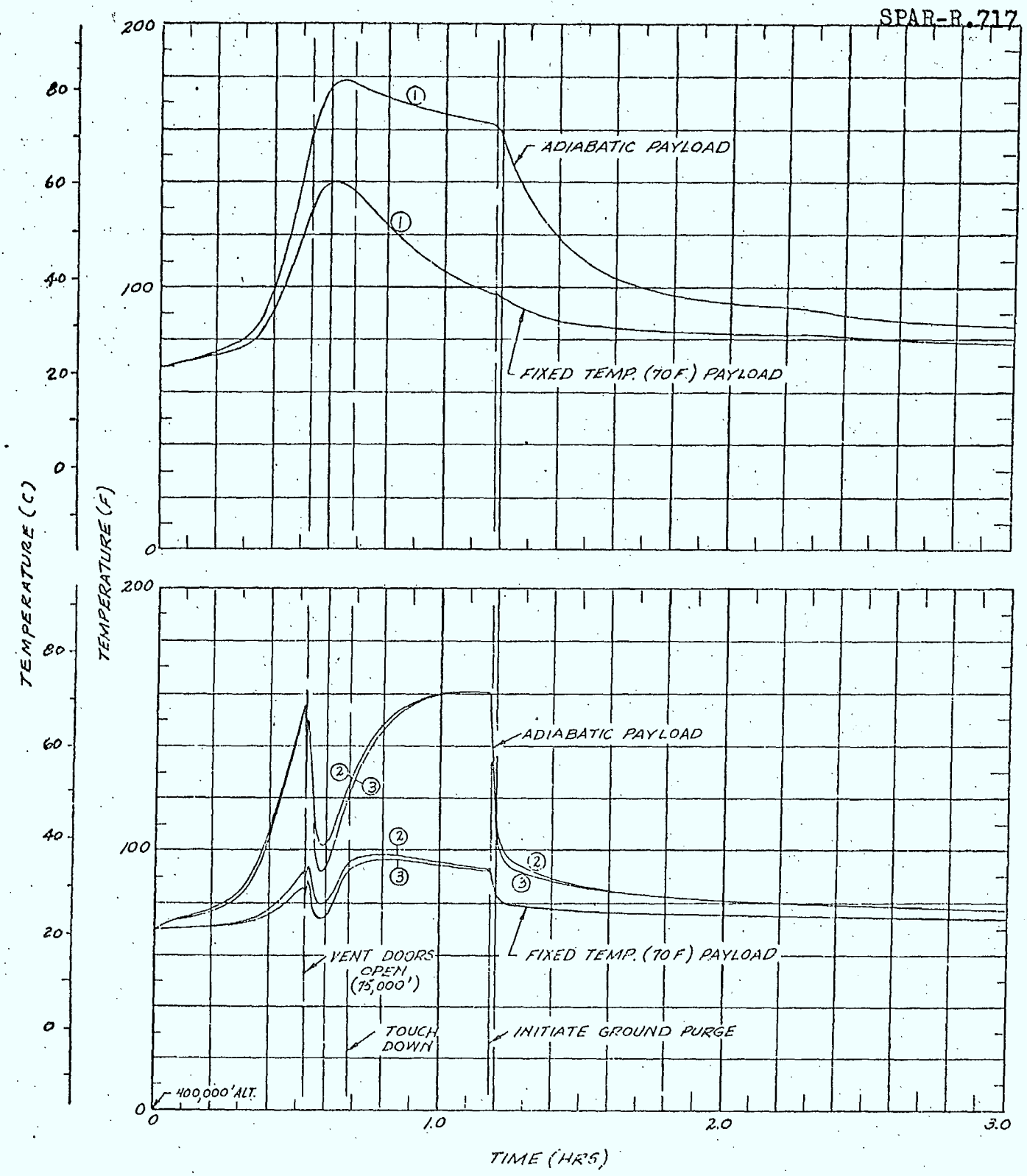

Entry thermal environment

X_0 = 582 to 760

CHANGE NO. 10

FIG 6-9
(REF 1.6 PAGE 4-26)

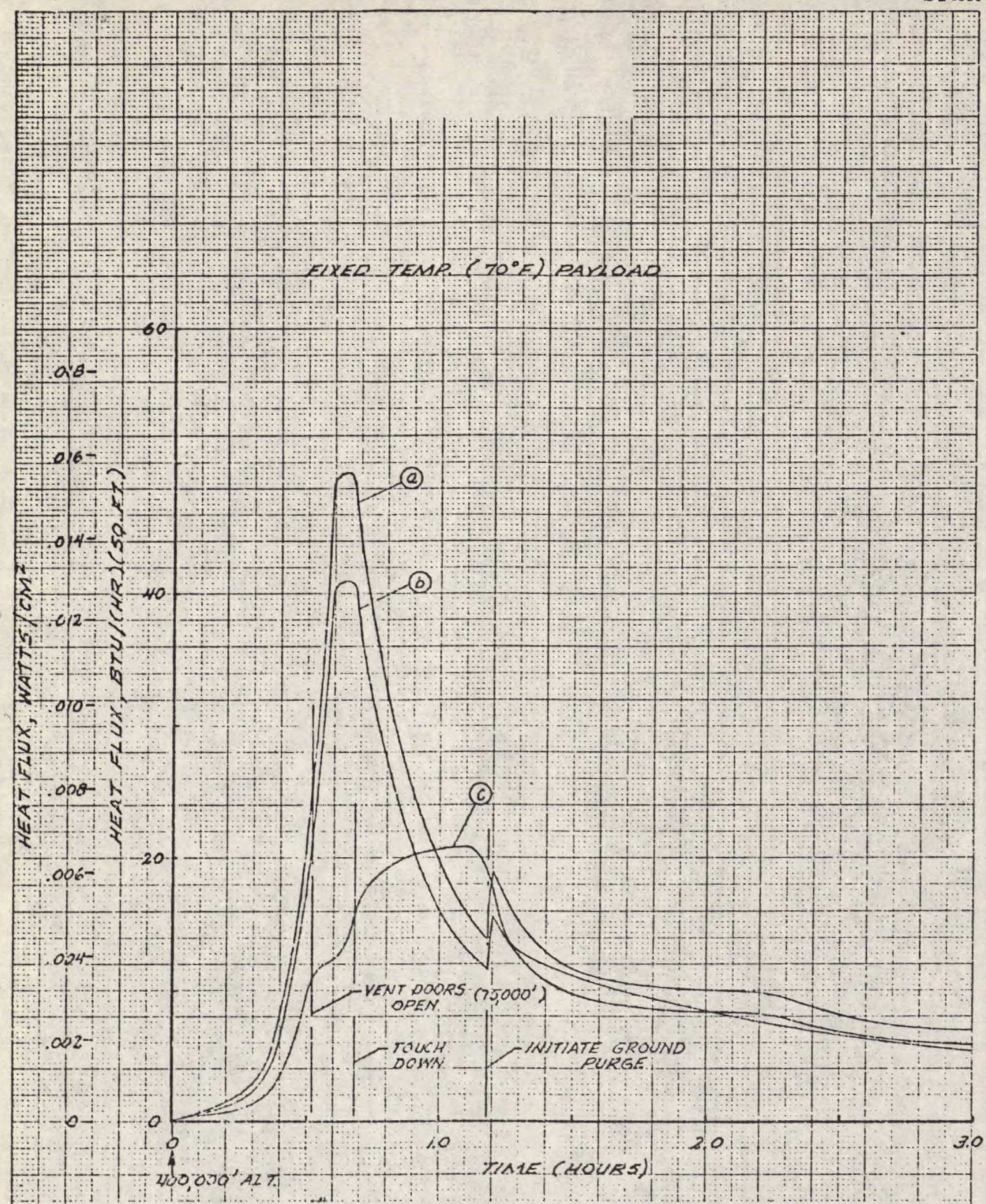

Impressed heat flux on payload (typical)

Fig 6-10
(Ref 1.6 Page 4-30)

6.2 GPB Design Modifications Required For Shuttle Launch

For launch of the GPB by the Space Shuttle, the spacecraft (together with its orbital transfer stage) would typically be mounted in the Shuttle payload bay with its yaw axis parallel to the Shuttle negative X axis. Attachment to the payload bay would be by means of an interface adaptor or cradle, clamped around the spacecraft separation ring. The weight of the support cradle would be payload chargeable.

An initial examination of the Shuttle environment presented in section 6-1 and comparison with the Delta 3914 environment has been made. A detailed study is required to fully assess the impact of the Shuttle environment on the GPB design, however the following comments apply:

6.2.1 GPB Structure Design

(a) The linear Shuttle ascent and landing accelerations are less severe in the spacecraft axial direction than are the Delta launch accelerations.

(b) Shuttle and Delta lateral accelerations are comparable, however, with qualifications as stated under (c) below.

(c) Spacecraft dynamic response effects to Shuttle transients have not been allowed for in the Shuttle accelerations, nor have any stiffness criteria for spacecraft design been offered with the objective of holding spacecraft dynamic responses within specified acceleration levels. Therefore a further study of the effect of transient loading is recommended; see also item (f).

(d) Crash condition accelerations in the spacecraft axial direction do not appear to be critical.

(e) Crash condition accelerations in the spacecraft lateral directions could be critical for a spacecraft with an ultimate safety factor less than 1.50; since the General Purpose Spacecraft Bus ultimate safety factor is 1.25, a further examination is recommended.

(f) Examination of dynamic transient effects arising from the sudden application of crash accelerations is recommended, in particular, for spacecraft lateral accelerations.

(g) Angular accelerations are not considered to be critical.

6.2.2 Thermal Design

Revaluation of the GPB thermal design is required to ensure that the:

- on-orbit payload bay doors-open, maximum solar input, environment and
- the re-entry, landing and postlanding, convective and radiative heating environments

are not design critical.

The Shuttle launch environment is however less critical thermally than the Delta launch environment (absence of aeroheating condition with Shuttle launch).

Also requiring examination is the thermal environment experienced by the GPB during upper stage boost to geo-synchronous orbit. If the transfer stage does not require spin stabilization for apogee firing (e.g. IUS) then control of the spacecraft orientation with respect to the solar vector and/or provision of electrical power may be required.

As indicated previously, it is recommended that an in-depth study be conducted of the impact of the Shuttle and upper stage environments of the GPB design.

7.0 MODULAR SPACECRAFT CONCEPTS

The concept of modular spacecraft capable of supporting widely varying mission requirements with little change to the spacecraft bus (hence, minimizing programme costs) has been the subject of numerous studies, both in the U.S. and Canada during the past few years.

Recently, modular has become synonymous with servicable as most modular spacecraft under current consideration are designed to be serviceable. However, this section will deal strictly with modularization of spacecraft and its advantages/disadvantages.

A typical modular spacecraft concept would have the following features:

- Basic primary structure common to all configurations capable of supporting modular component/subsystem configurations.
- Payload and housekeeping component/subsystem modules capable of being integrated/removed from the primary structure with relative ease.
- Component complement of housekeeping subsystems capable of supporting widely varying mission requirements, possibly with substitution/addition of components being required.
- Only a single series of component and subsystem level tests required.

As indicated above, a reduction of programme DDT&E costs (from those associated with a unique spacecraft design for each mission) is possible with the use of a modular spacecraft system capable of supporting numerous programs/missions. This is especially true if significant reduction in system level testing can be realized through the use of "clean" interfaces with the spacecraft bus payloads.

However, the disadvantages lie in:

- Greater spacecraft weight, both structure and components, required for modularity and performance capability respectively.

- Higher initial spacecraft cost associated with modular design approach. (For a single spacecraft.)

The economics of modularization are discussed in Section 8.3. Presented below are two modular spacecraft designs, one by NASA GSFC which will shortly be translated into flight hardware and the other a concept generated by COMSAT Corporation as part of an in-orbit servicing study. (Note: both designs feature servicability.)

7.1 NASA GSFC Mult Mission Spacecraft

The design of the Multi Mission spacecraft (MMS, - originally called the Low Cost Modular Spacecraft) is shown in Figures 7-1 through 7-3. As GSFC indicate, it was "born out of frustation in attempting to use an existing spacecraft for additional missions".

Among its features are:

- Three subsystem modules (attitude control, power and communcations and data handling) supported on a module support structure with transition adaptor and vehicle adaptor to the payload, (via mission adaptor), and launch vehicle respectively. Interface with the launch vehicle at the transission frame is also possible, thereby avoiding passing payload induced launch loads through the spacecraft.

- Solar array, capable of having its size and orientation tailored to meet mission requirements.

- Thermal subystem employing louvres and heaters and decoupled subsystem modules, to effectively accommodate any spacecraft orientation and orbit.

- Attitude control subsystem employing for geosynchronous missions:

  High performance gyro inertial reference unit.

  A pair of fixed star trackers.

  Precision digital and course sun sensors.

  On-board computer (located in C&DH module).

  Reaction wheels.

- The control system software can be tailored to meet mission unique requirements.

- Propulsion system module, mounted in the region of the base adaptor, that can also be tailored to meet mission unique requirements.

- Level of component redundancy can be modified from non-redundant to fully redundant based on mission and cost/weight/reliability trade-offs.

- The spacecraft can also be modified to permit on-orbit servicing.

Component complement and weight breakdown for a Delta compatable configuration is shown in Figures 7-4 and 7-5.

It should be noted that the MMS could only support a DOC UHF mission if launched on the STS (weight being too great to geosynchronous orbit for a Delta launch vehicle). Furthermore, the component complement and presently proposed locations are inefficient from a weight standpoint for support of geosynchronous communications mission.

Launch configuration with conventional launch vehicle and with an IUS are shown in Figures 7-6 and 7-7.

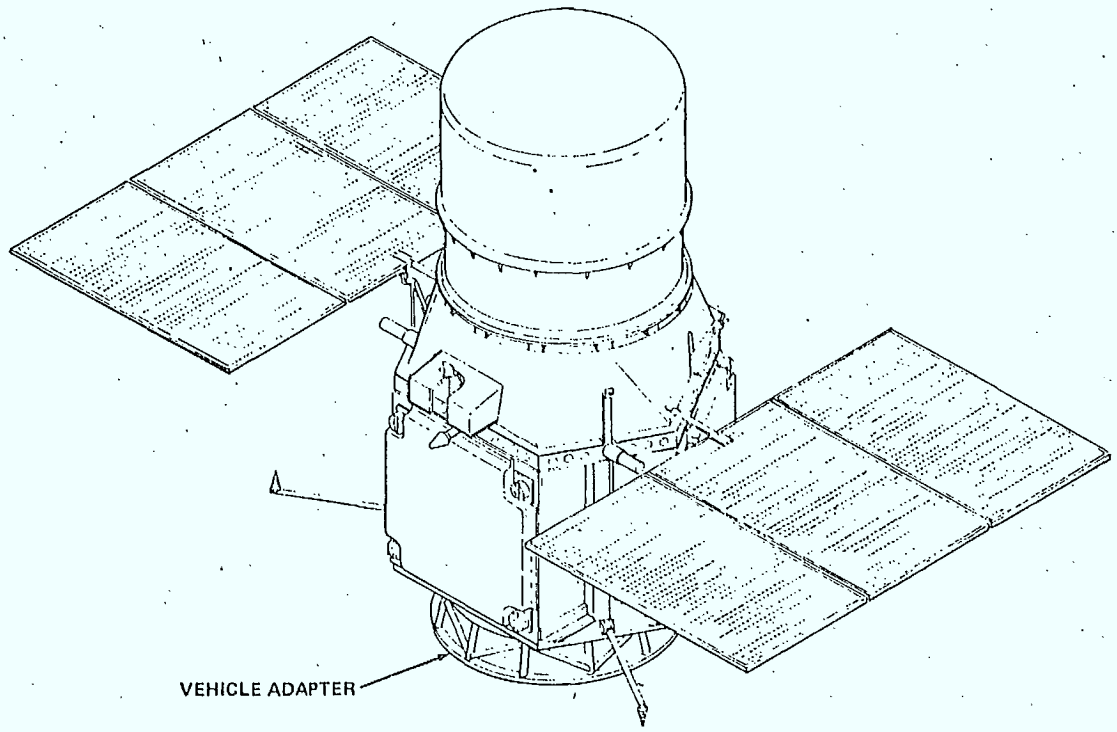

Low Cost Modular System

FIG 7-1
(REF 1.11 PAGE 2-4)

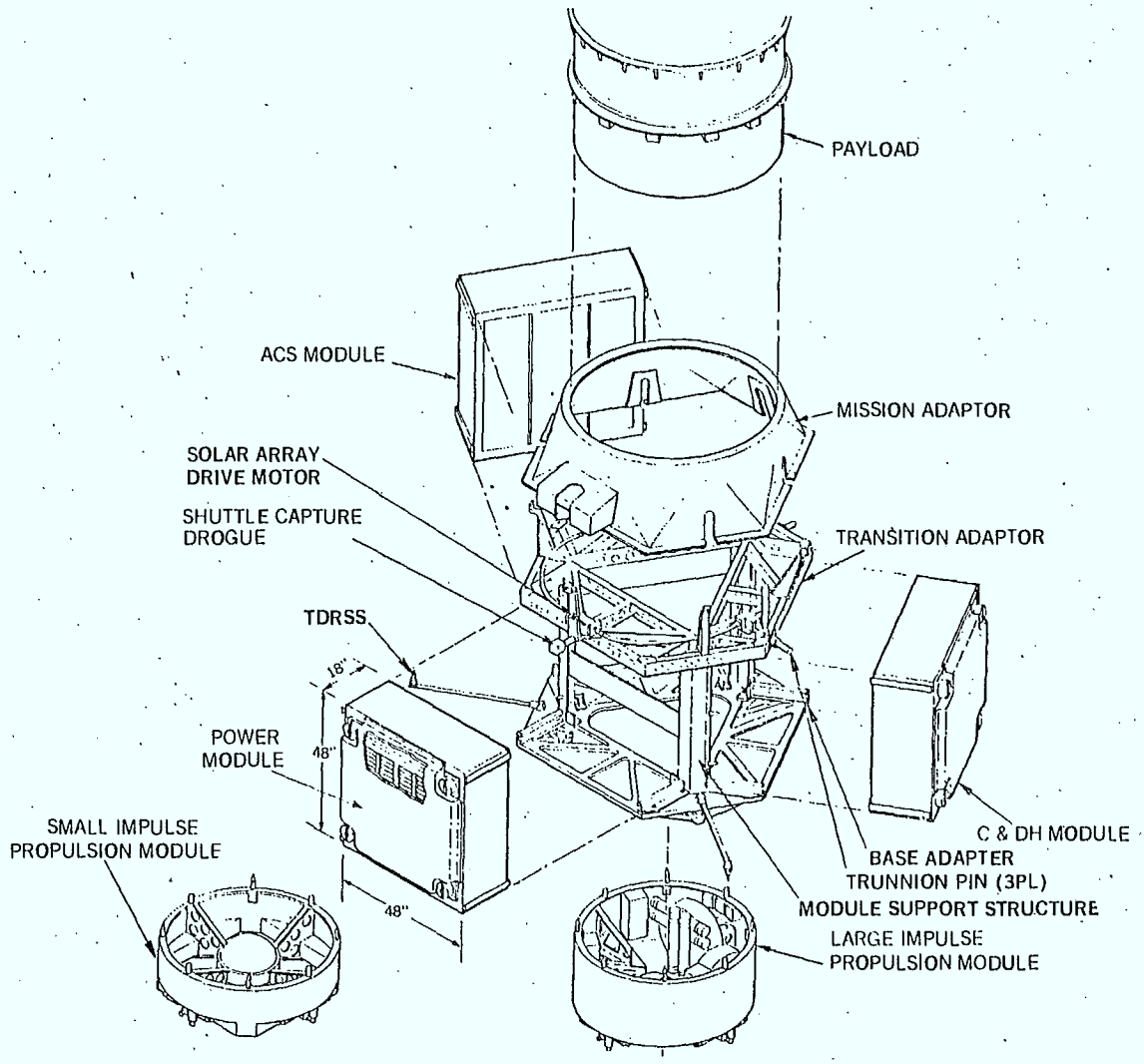

Low Cost Modular System (Exploded View)

FIG 7-2
(REF 1.11 PAGE 2-3)

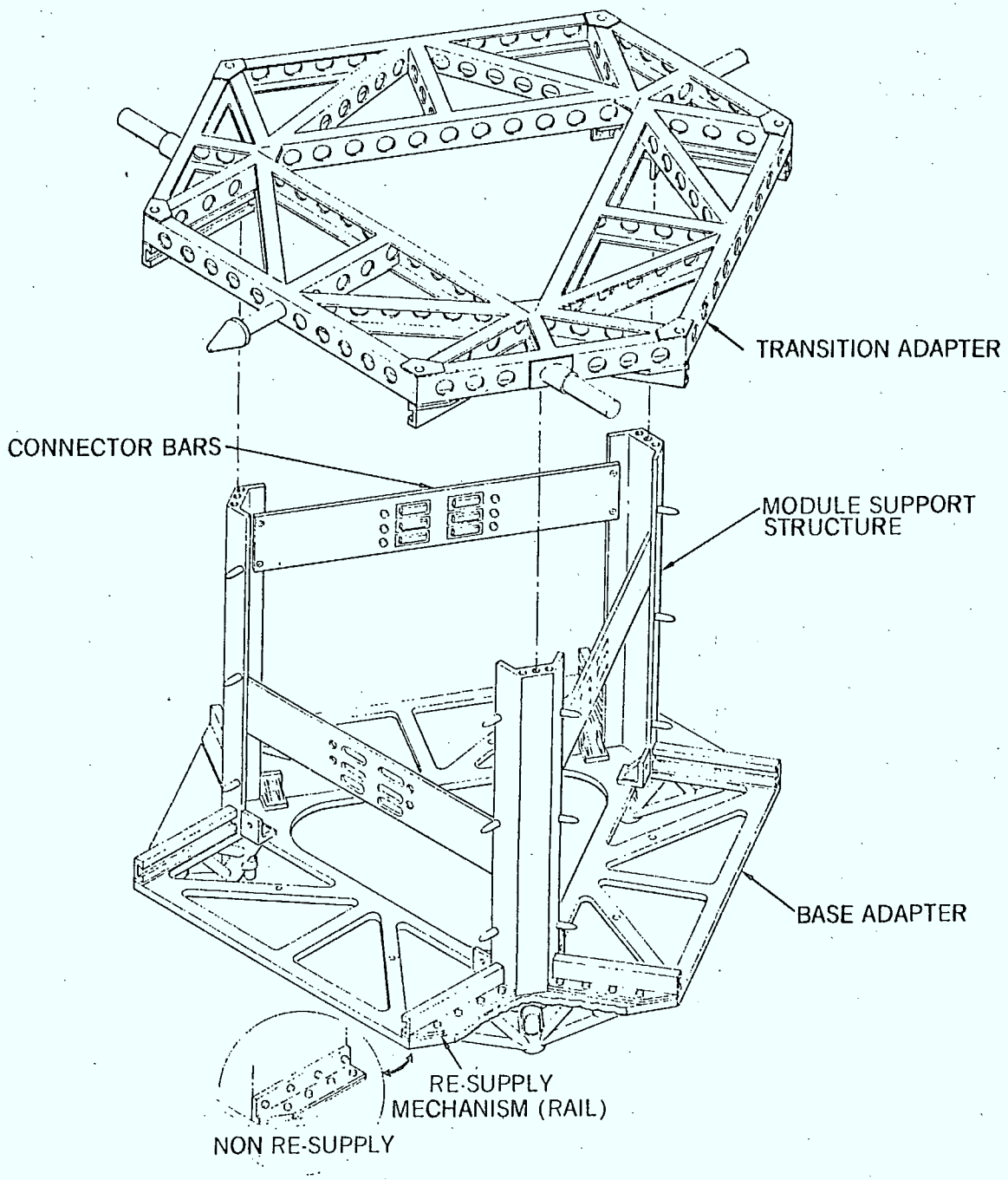

Module Support Structure

(BGE 1.11 PAGE 2.2) FIG 7-3

NASA GSFC . HMS

Weight Statement

Component	Baseline Configuration Quantity	Baseline Configuration Total Weight	Fully Redundant Configuration Quantity	Fully Redundant Configuration Total Weight	Remarks
2.3.1 Communications & Data Handling		(101.0)		(131.0)	
* STADAN Transponder	2	16.0	2	16.0	
** Omni Antennas	2	4.0	2	4.0	
* Transponder Preregulator	2	4.0	2	4.0	
** RF Switches	2	1.0	2	1.0	
Command Demod/Decoder	2	8.0	2	8.0	
Format Generator, Clock, Bus Controller	2	8.0	2	8.0	
Remote Interface Unit	2	4.0	2	4.0	
Computer Interface Unit	2	6.0	2	6.0	Std. Low Cost Unit
Computer NSSC-1	1	30.0	2	60.0	Std. Low Cost Unit
Premod. Processor	2	4.0	2	4.0	
Pwr. Protect & Conditioning	1	6.0	1	6.0	
Harness & RF Cable	A/R	10.0	A/R	10.0	
2.3.2 Electrical Power Module		(266.0)		(522.0)	
Battery Charger (Part I)	1	22.0	1	22.0	
Battery Charger (Part II)	1	20.0	1	20.0	
* Battery 20 AH @ 51#	2	102.0	3	357.0	3 Batteries for Redundant Conf. are 50 AH
Signal Conditioning Assy.	1	19.5	1	19.5	
Power Disconnect & Current Assy.	1	20.0	1	20.0	
S/C Interface Connector Assy.	1	10.0	1	10.0	
Bus Protection Assembly	1	4.5	1	4.5	
Ground Charge Diode Assy.	2	6.8	2	6.8	
Remote Decoder @ 0.5#	1	0.5	2	1.0	
Remote Multiplexer @ 0.5#	1	0.5	2	1.0	
Module Harness	1	35.0	1	35.0	
Heat Sink Divider	1	6.5	1	6.5	
Misc, Brackets, Structure	A/R	12.0	A/R	12.0	
2.3.3 Attitude Control Module		(264.0)		(332.0)	
** Reference Gyro Assembly	1	40.0	2	80.0	
Bus Protection	1	8.0	1	8.0	
Magnetometer	1	5.0	2	10.0	
Interface Assembly	1	20.0	1	20.0	
Coarse Sun Sensor	8	4.0	8	4.0	
* Star Trackers	2	22.0	2	22.0	
* Reaction Wheels	3	60.0	4	80.0	
Drive Unit Electronics	1	30.0	1	30.0	

FIG 7-4
(REF 1.11 PAGE 2-10)

WEIGHT STATEMENT (CONT'D)

Component	Quantity	Total Weight	Quantity	Total Weight	Remarks
2.3.3 Attitude Control Module (Cont.)					
** Magnetic Torquers	3	30.0	3	30.0	
Remote Multiplexer	4	2.0	8	4.0	
Remote Decoder	2	1.0	4	2.0	
Harness	1	20.0	1	20.0	
* Digital Sun Sensor	1	10.0	1	10.0	
Additional Structure	1	20.0	1	20.0	
2.3.4 Structure (Delta Launched)		(403.0)		(403.0)	
Transition Adapter	1	150.0	1	150.0	
Module Support Structure	1	73.0	1	73.0	
Module Structures	3	150.0	3	150.0	
Shuttle Launch & Retrieval Hardware	1	30.0	1	30.0	
2.3.5 Thermal Control		(62.1)		(62.1)	
Louvers & Covers (4.8 #ea. & cover)		30.0		30.0	
Blankets, 102 sq. ft.		8.2		8.2	
Paint, 3 mil		5.0		5.0	
Heaters, 25 sq. ft.		3.0		3.0	
OSR, 6 mil		12.9		12.9	
Silver-Teflon, 5 mil		3.0		3.0	
2.3.6 Electrical Integration		(73.0)		(73.0)	
Signal Conditioning & Control Module		25.0		25.0	
Wire, Cable, Connectors	A/R	45.0	A/R	45.0	
Misc. Clips, Tie Downs	A/R	3.0	A/R	3.0	
2.3.7 Vehicle Adapter (Delta 2910)		(66.0)		(66.0)	
Launch Vehicle Adapter		43.0		43.0	
Separation Mechanism		20.0		20.0	
Misc. Connectors, Harness		3.0		3.0	
TOTAL		1235.1		1589.1	

* Exists
** Mod. of existing hardware

Fig 7-5
(Ref 1.11 Page 2-11)

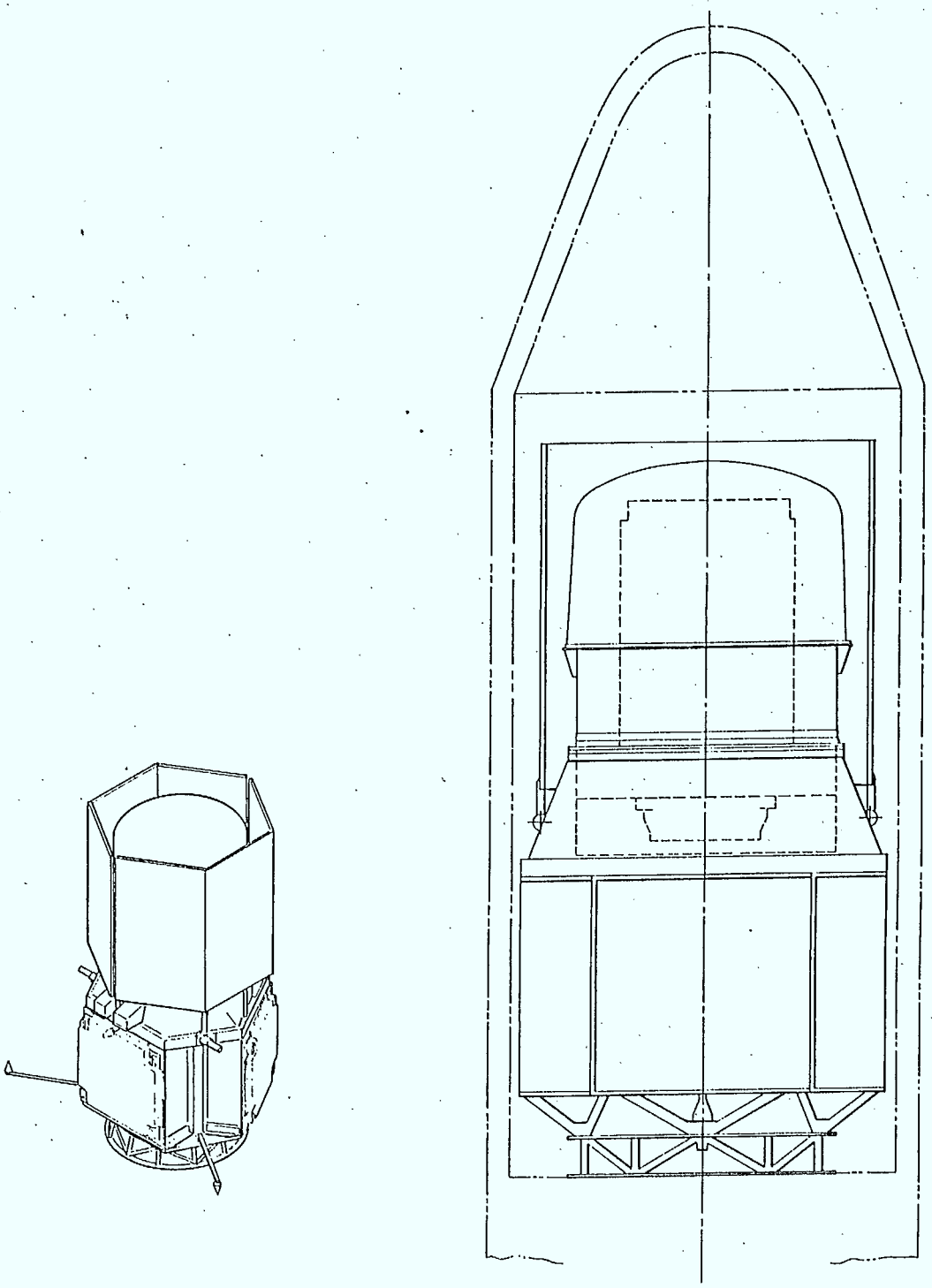

Envelope Drawing

FIG 7-6
(REF 1.11 PAGE 2-8)

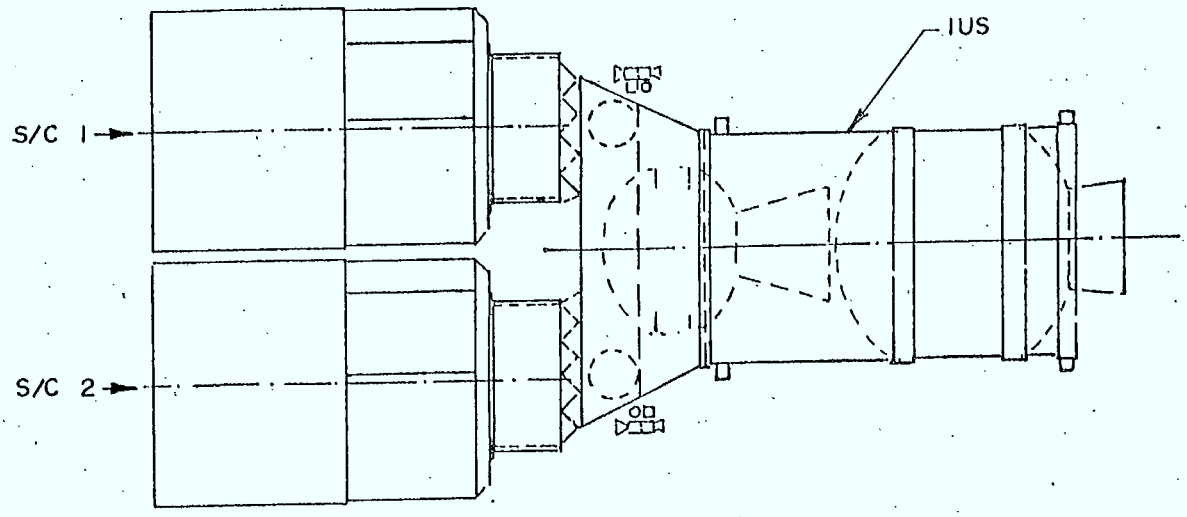

Operational Mission with 2 Spacecraft

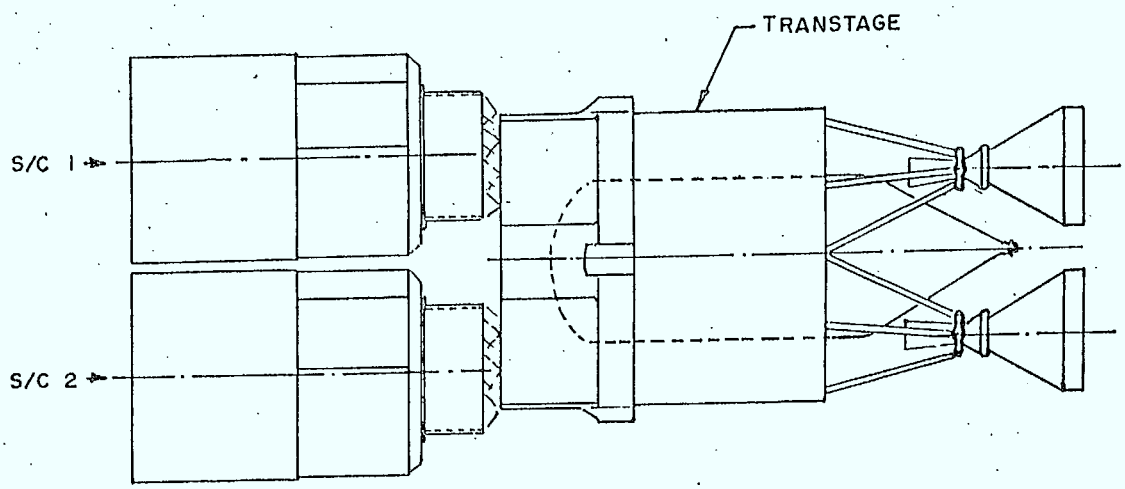

Operational Mission with 2 Spacecraft

FIG 7-7
(REF 1.11 PAGE 2-9)

7.2 COMSAT Geosynchronous Communications Spacecraft Concept

The design is presented in Figure 7-8. Its technology is somewhere between that of Intelsat V and Intelsat VI. It features:

- Fourty-eight transponders.
- Two or possibly three communications bands.
- .1° attitude control.
- Seven year life minimum.
- 1000 watts of primary power.
- Mid-1980's installation.

The design reflects a configuration that is more suitable to support of geosynchronous communications missions than the GSFC MMS. Utilization is made of the full width of the Shuttle payload bay at the same time as minimization of spacecraft length. Thermal requirements of payload equipment (particularly high power dissipation TWT's) are catered for with the location of these components on the North and South faces respectively.

Calculations performed by COMSAT indicate the weight penalty for modularization is approximately 30% of total spacecraft weight (i.e., in comparison of the weight of the modular spacecraft with that of an existing spacecraft design) and as indicated by COMSAT it is considerably different from earlier predictions of the weight penalty for modularization, these predictions being approximately a factor of 2 to 3 times the weight of a unique spacecraft design.

MODULARIZED SERVICEABLE SPACECRAFT

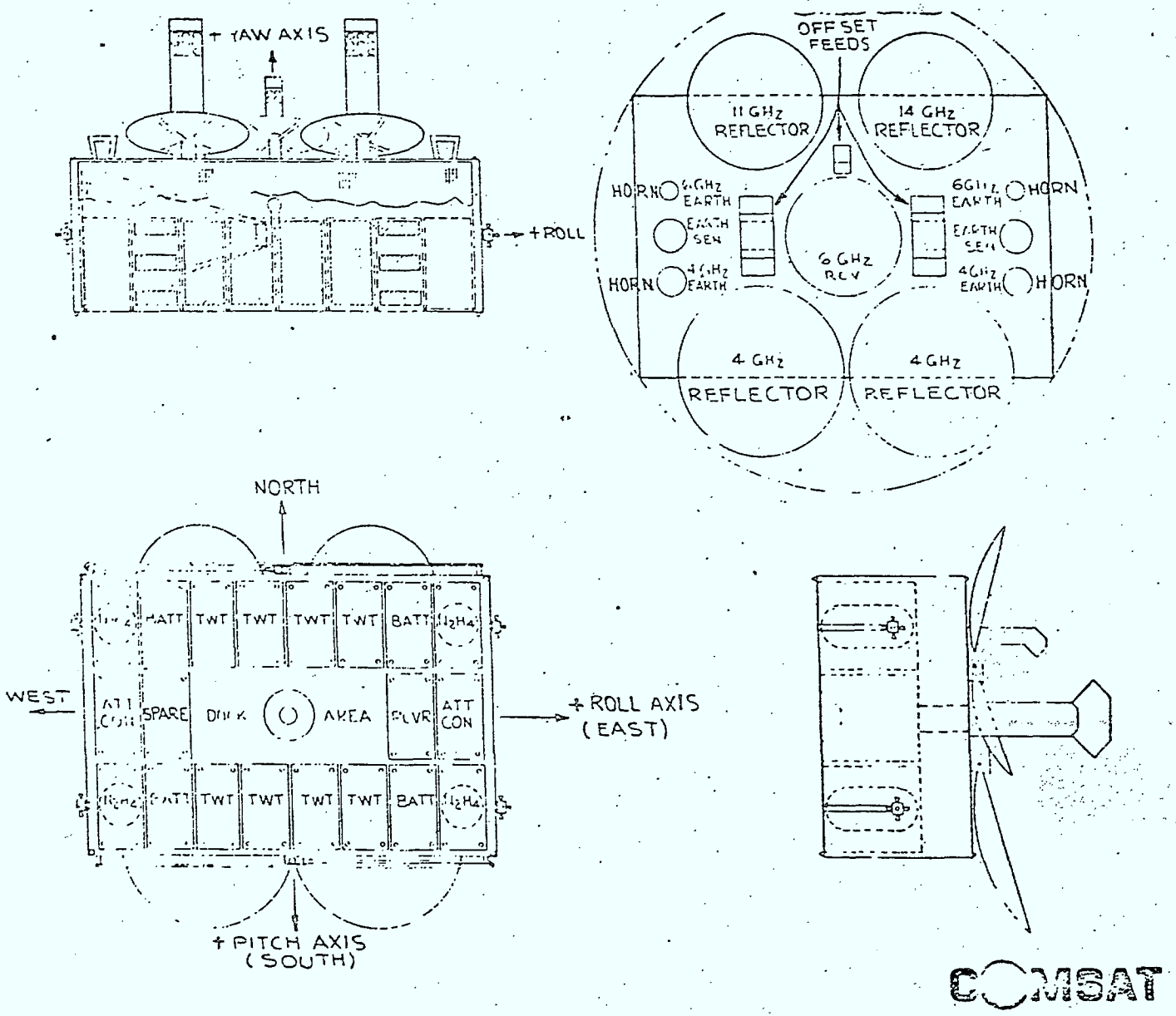

Fig 7-8 (Page 35) 1.10

8.0 SPACECRAFT SERVICING IN GEOSYNCHRONOUS ORBIT

Recent studies carried out for NASA Marshall Space Flight Center by Martin Marietta and COMSAT Corporation have indicated the considerable cost savings to be realized (even for geosynchronous space programmes) if spacecraft are designed to be servicable, permitting spacecraft repair or technology update merely by replacing modules in the spacecraft rather than building and launching complete spacecraft.

This section addresses the various servicing concepts being considered, their effect on spacecraft structures (e.g., flexible appendages) during the servicing operation, the economics of geosynchronous servicing and lastly, potential users viewpoints of geosynchronous servicing.

It should be stressed that the latter two tasks pertain only to geosynchronous servicing where the servicing concepts and economics depart significantly from those that apply at low earth (e.g., Shuttle) orbit.

8.1 Spacecraft Servicing Concepts

This section will review the various methods of spacecraft servicing which are currently being considered for use with the Space Shuttle. Relative emphasis is indicated on the basis of what appears to be current NASA opinion. This may, and quite probably will, change with the passage of time.

8.1.1 Return to Earth

As implied by the title, the servicing concept entails rendezvous, stowage in the Shuttle cargo bay, and return of the satellite which may be in need of service. Once on the ground, the satellite can then be taken into a workshop and completely repaired and/or overhauled before being returned to orbit. This concept is expensive in that it requires the return-to-orbit launch cost to be

added to every servicing operation (whether that be a whole or shared launch), but it is inexpensive in the satellite design, in that no special design features are required to be incorporated into the basic spacecraft, other than those that are inherent by virtue of being a Shuttle payload. Such features would include a method of attachment to the inside of the payload bay, and an end effector grapple point for capture by the Shuttle Remote Manipulator System. Some added penalty may be incurred if the tie-down within the Shuttle bay interferes with the stowage of another payload.

This method of servicing is favoured generally by the more conservative thinkers throughout NASA and the aerospace community, in that it essentially requires no new hardware, is based on conventional spacecraft philosophies, and of course, permits the full resources of an aerospace company to be applied to the repair and servicing (new business!). Also, the risk of undertaking an in-orbit service, then discovering that the fault has not been fixed, is avoided.

The economics of this concept of servicing generally favour its use for low earth orbit, where the Shuttle can effect a direct pickup. The economics for a geosynchronous payload would appear at this time to be justifiable only for the most sophisticated and expensive of satellites.

8.1.2 Extra Vehicular Activity (EVA)

There still exists within NASA, a core of astronauts who believe that everything that can be done in space should be done by a suited astronaut operating in an EVA mode. The problem associated with this type of activity is that the current astronaut suit is a low pressure design, requiring a 6-hour cycle of prebreathing and postbreathing pressure transitions to be undertaken to avoid the onset of a medical complaint similar to the bends. In the Apollo program, this suiting procedure was applicable to all astronauts in the vehicle since no air lock existed through which to pass an egressing

member of the crew. Similarly, because the internal portion of the spacecraft was subject to vacuum during EVA activities, all equipment on board was designed accordingly.

The Shuttle will eliminate some of these problems; the crew compartment is considered a shirt sleeve environment at all times, and an airlock is provided for a crew member going EVA. However, the one problem of cycle time still remains with the current design of astronaut suit. Currently with a seven day Shuttle mission, NASA find it unacceptable under normal operational circumstances, to accept a prebreathing/suiting/postbreathing time frame of 6 hours (plus outside work time) for an astronaut to go EVA.

Al Worden, formerly Apollo 15 Command Module Pilot and now a Branch Chief at NASA AMES (his notice has just been tendered) is a very strong proponent of what is now known as the "8-psi suit", which will all but alleviate prebreathing and post breathing time. NASA however, places a low priority on putting money into a new suit design, as witnessed earlier this year when pressured by the Congressional Science Committees to trim their budget; the 8-psi suit development funds were completely removed.

While the tight money situation continues to exist, NASA will continue to rely on the current Apollo suit. For this reason, it seems probable that EVA will only be used in situations where the man in space is considered essential to the mission, or in situations considered to be an emergency. It is improbable that it will be considered applicable to any routine work that can be done by alternate mechanized means within reasonable cost; mechanisms for in-orbit maintenance are currently considered (by most) to be within reasonable cost.

8.1.3 Shirt Sleeve Environment

Some two to three years ago, NASA Marshall Space Flight Center were promoting the Large Space

Telescope (LST) as being maintained on orbit by means of a technician working in a shirt sleeve environment. This was achieved by docking the instrument package end of the LST with an umbilical tunnel extending from within the cargo bay and attached to the crew compartment airlock. Subsequent to docking, the rear end of the LST would be brought to the atmospheric conditions which exists within the Shuttle crew compartment, thus permitting a technician to travel through the umbilical and into the aft portion of the satellite. From this position he would be able to undertake the removal of systems and instrument packages, effect repairs on the spot, or simply replace elements. Once fully repaired and checked out, the satellite would be sealed from the Shuttle, depressurized again, and placed back into operational orbit.

Judging by the current documentation coming out of Marshall on this program, it would now appear that this method of servicing has now slipped from favour. To the best of Spar's knowledge it has never been seriously considered by any other center concerned with Shuttle payloads and is mentioned herein only to document what has been considered in the past; it is thought unlikely that this concept will come back into vogue.

8.1.4 Mechanized - Shuttle Hard Dock

Both this and the following section are based on the servicing of modular spacecraft. However, a subdivision has been made in these descriptions between those vehicles which are capable of adjusting their orbit (if necessary) in order to rendezvous and dock with the Shuttle during refurbishment and, on the other hand, by those vehicles which by virtue their orbit must be serviced by some remotely operated mechanism.

Considering first therefore the techniques for servicing in the Shuttle payload bay; the Shuttle synchronizes orbits with the satellite to be serviced and through manoeuvring techniques (yet

to be defined), captures the satellite at a position directly above the crew compartment by means of the Remote Manipulator System (RMS). It then moves the satellite down into the cargo bay onto some type of docking platform which will vary in design according to the concept being considered. The satellite modules can now be unfastened, removed and replaced with a new module stored within the cargo bay by either the Shuttle RMS or a dedicated manipulator of some type.

One example of this concept which has recently undergone successful ground testing, is the Spar Special Purpose Manipulator System (SPMS) shown in Figures 8-1 and 8-2. It is anticipated that the SPMS will be flown on one of the early Shuttle flights to demonstrate in flight servicing of the GSFC MMS. Figure 8-3 shows another servicer concept, this one by TRW.

When it is considered that the repair or refurbishment is complete, the Shuttle remote manipulator system will remove the satellite from its docking platform, return it to a position immediately above the crew compartment and release the satellite. Then, via the Tracking and Data Relay Satellite (TDRS), the refurbished spacecraft will be reactivated and fully checked out by means of a ground computer just as if it was sat on the launch pad. When full operational capability has been confirmed, the Shuttle will leave the site and go about its planned mission. If, in the event that the checkout does not prove the satellite to have been returned to operational status, and if the correct retention fittings have been installed in the cargo bay, the satellite can be returned to earth for a further investigation.

8.1.5 Mechanized - Remotely Operated

In the situations where the Shuttle cannot rendezvous directly with the satellites concerned, then an intermediate vehicle, launched from the Shuttle, must be used for the operations. Generally the vehicles break down into two types; those which

depend on the tug (or interim tug) as the prime vehicle, and those which employ a specially designed vehicle designated Free Flying Teleoperator (FFTO). (See Figure 8-4) It may be difficult to rationalize a necessity for the development of both vehicles since they appear to have an overlap in mission. However, NASA as a body is dedicated to providing a vehicle known as the Tug which will be capable of lifting as much as 7,000 lb. payload to geosynchronous orbit and returning to the Shuttle for a ride back to earth. On the other hand, NASA Marshall have been promoting the use of the FFTO which does not have the capability of delivering payloads, but which travels around space visiting satellites and repairing them by means of its manipulators and a stock of spares.

The concepts of undertaking geosynchronous servicing are many and attempts have been made to categorize the design approaches for the sake of this document. They vary in details from such as the size of module they will handle, the flexibility they provide to take varions size modules, and their method of docking. However, they are all remotely ground-piloted to the rendezvous station with a satellite, and module exchange can be affected either under the control of the ground based operator or by means of preprogramming. It is worth noting the common elements however, of the approaches to illustrate the current trend in thinking:

- All result in a physical mating between the servicing vehicle and the satellite.
- A module is replaced in its entirety as against any attempt to repair at the component level.

To compare the servicing concepts of low earth orbit and geosynchronous orbit is folly because of starkly different mission requirements; nonetheless many NASA study reports do just this. In low earth orbit, weight is of little premium for satellite and servicer, hence both will be large

and bulky, and modules will be complete systems. In geosynchronous orbit, weight is premium, especially if one is sharing the costs of launch with another satellite being delivered or with other satellites to be serviced. Hence, satellite modules will be much smaller by comparison and probably divide at the subsystem level rather than the system level. Also, in order to conserve weight, the geosync-servicer should be less dexterous, shorter reach and fewer degrees of freedom, all factors which will drive the design to be compact, light and generally more efficient.

FLIGHT SUPPORT SYSTEM IN ORBITER

SPAR

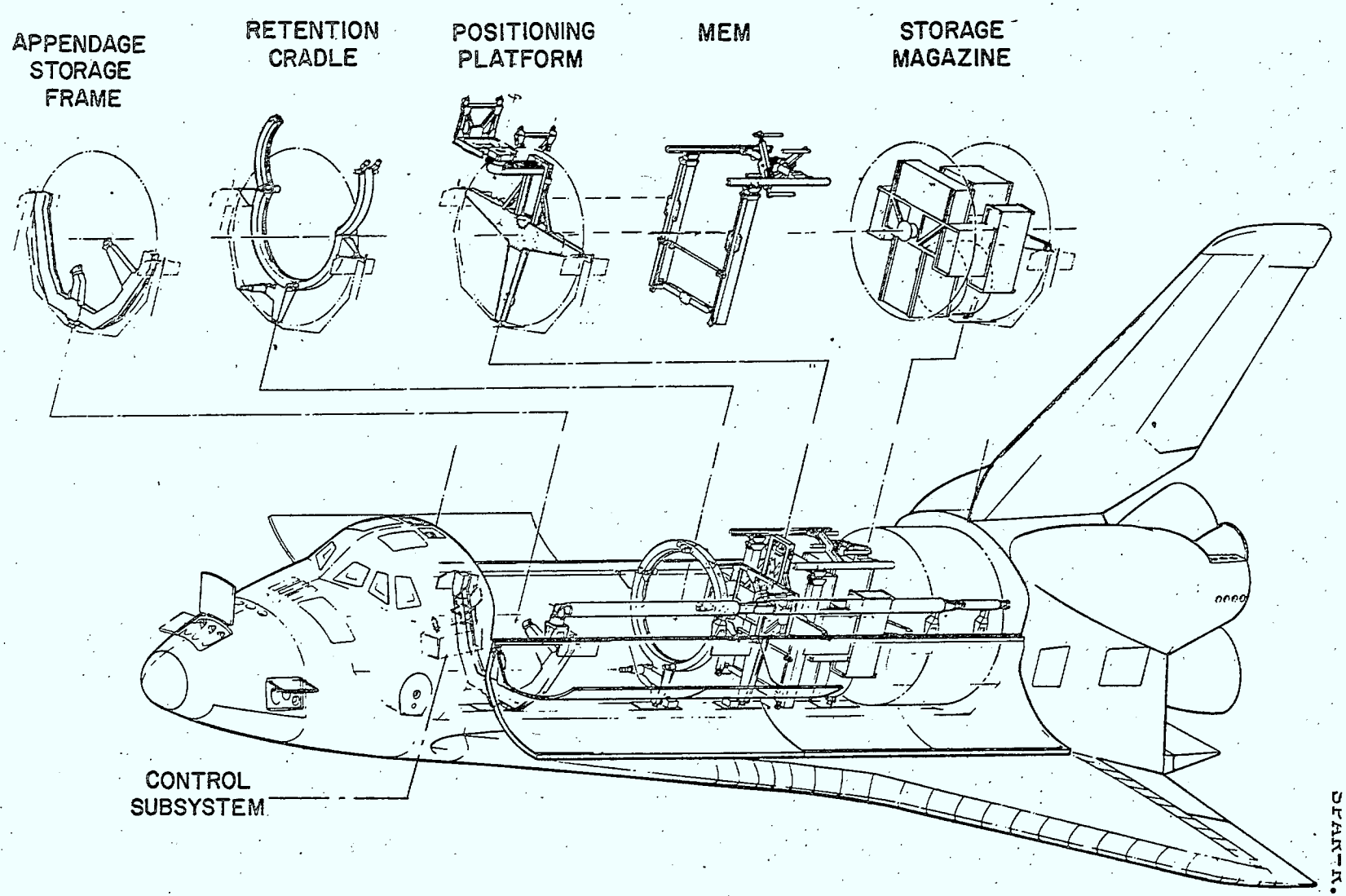

RMS DIVISION

SPAR-R-171

FIG 8-1 (REF 1.8 PAGE 3)

SPAR SPMS

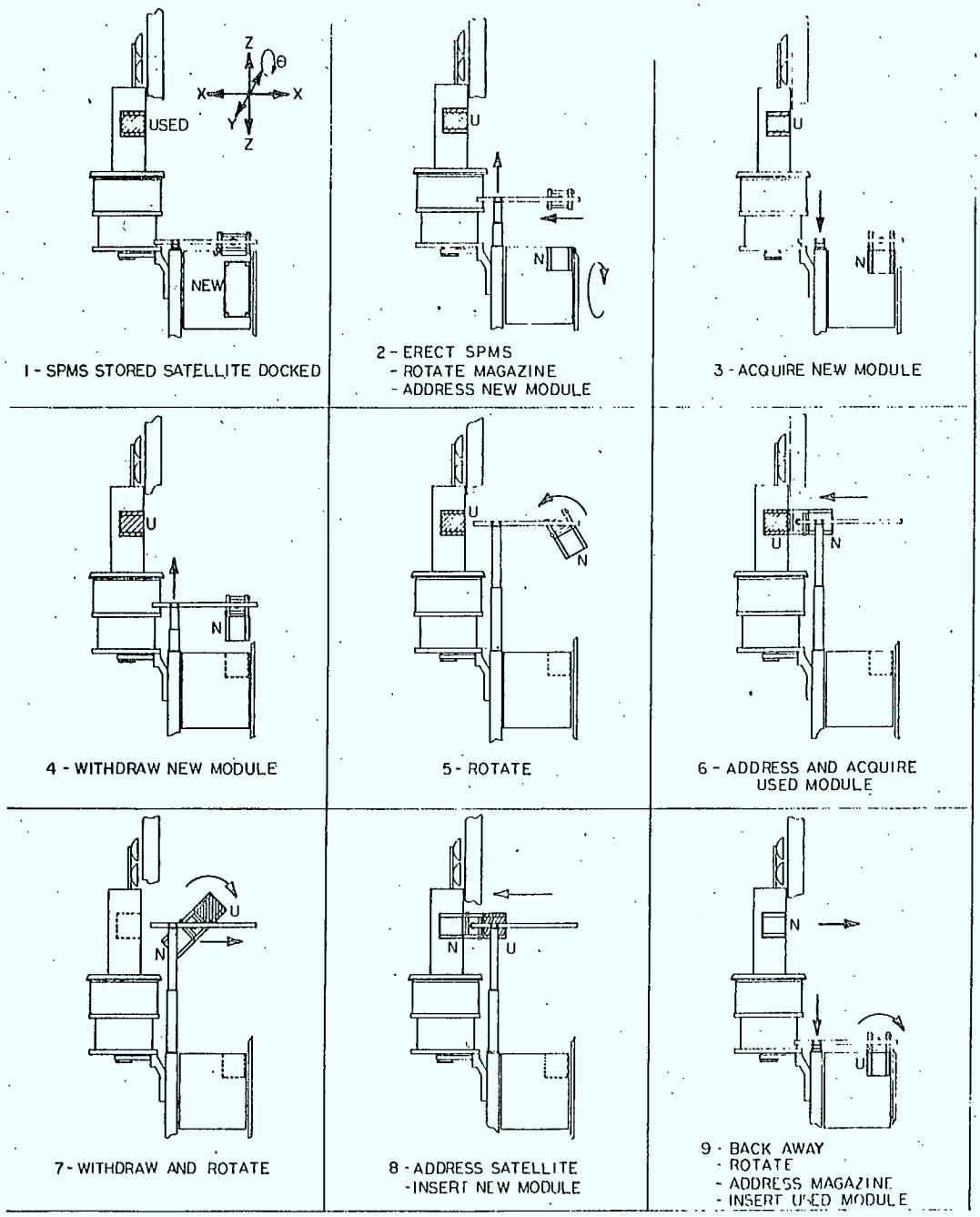

Module Exchange Sequence

FIG 8-2
(REF 1.8 PAGE 8)

PIVOTING ARM ON-ORBIT SERVICER

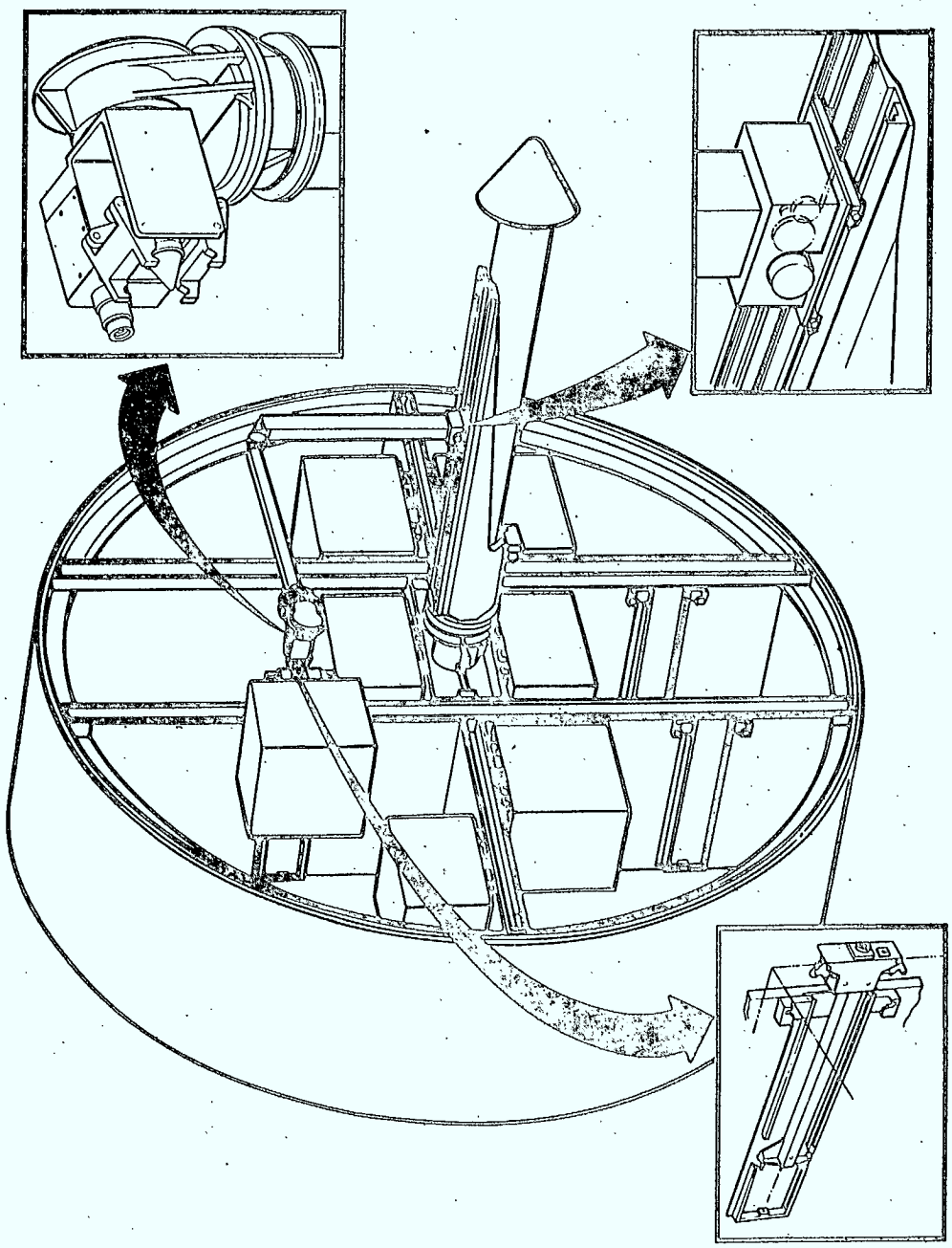

FIG 8-3
(REF 1.9 PAGE 8-17)

Automated Geosynchronous Servicing Options

SPACEBASED SERVICE UNIT

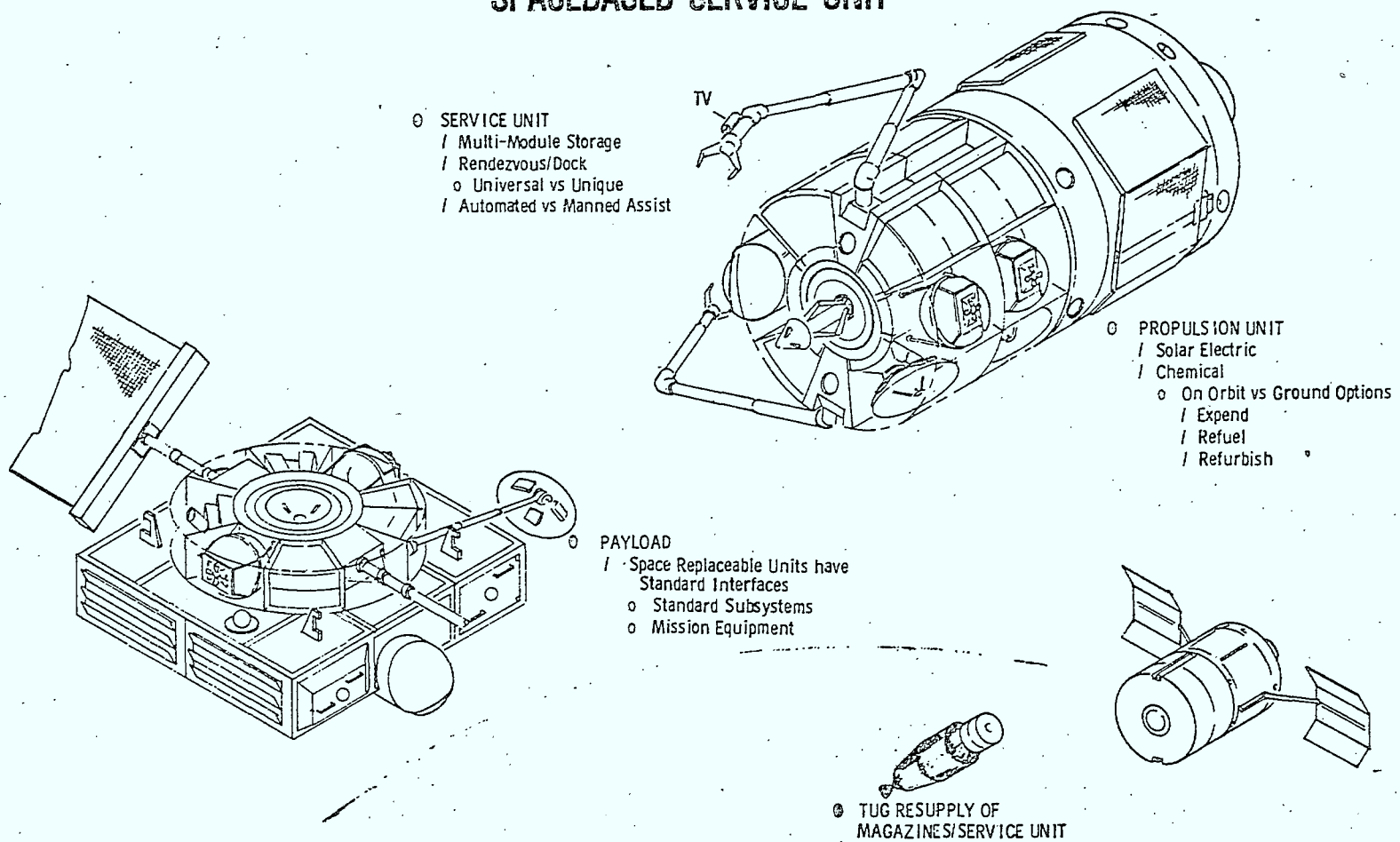

Fig 8-4

8.2 The Effects of On-orbit Servicing on Spacecraft Appendages

8.2.1 Introduction

While the feasibility of exchanging spacecraft subsystem and experiment modules has been demonstrated by NASA-Goddard on the Multi-Mission Spacecraft program, a question mark still remains as to the practicality of removing and replacing externally-mounted spacecraft appendages that are either worn out, or that are likely to be damaged during docking manoeuvres with either the Shuttle Orbiter or Space Tug. This section of the report discusses the various external appendages that are likely to be encountered on future servicing missions, design considerations that should be addressed, typical servicing loads that might be experienced by an appendage, and conclusions and recommendations.

8.2.2 Space Appendage Types

Spacecraft appendages may be broadly categorized as follows:

- antennae and antenna farms
- solar panel arrays (flexible and rigid)
- gravity gradient booms
- instrument booms

While detailed information related to appendage sizes and configurations for the spacecraft of the 1980's is not available at this time, certain guidelines can be drawn from the characteristics of current and near future spacecraft and their associated mission requirements. These characteristics have been grouped in the categories above as follows:

(a) Antennae and Antenna Farms

i) Dipole Array Structures -typically extendible/ retractible STEM-type

		booms with tip to tip distances ranging from 60 to 1,500 feet. Spacecraft examples in this class are Alouette, ISIS and RAE.
ii)	UHF Structures	Operating range - 200 to 400 MHz. Typically a large diameter dish (i.e., 13 feet proposed for Canadian UHF Satellite) or deployable helical array (i.e., 1.5 feet diameter, 15 to 20 feet long such as for Fleetsatcom). Spacecraft are 3-axis stabilized.
iii)	S-Band Structures	Operating range - 4 to 6 GHz. Spacecraft are mostly spinners and are, therefore, difficult to service anyway. However, they could be 3-axis stabilized like DOMSAT. Typically this class could employ a fan-shaped reflector approximately 3 to 4 feet high (i.e., Anik).
iv)	SHF Structures	Operating range - 12 to 14 GHz spacecraft which are 3-axis stabilized employ 1 to 2 feet diameter dishes which are either fixed or steerable.
v)	Synthetic Aperture Radar Structures	Operating range - 1200 MHz. Spacecraft are 3-axis stablized and could employ an antenna

structure 18 to 24 inches wide and 20 feet long. (i.e., SEASAT)

(b) Solar Panel Arrays

Note: The power given in the examples below is total spacecraft system power. Solar panel dimensions are for a single panel.

i)	Flexible, Extendible Arrays	1300 watts - each panel 24 feet long X 4.5 feet wide. Typical examples are CTS and INTELSAT V.
		2000 watts - each panel 34 feet long X 4.5 feet wide. In planning stages for ESA TV Broadcast Satellite.
ii)	Flexible, Roll-Up Arrays	1500 watts - each panel 15 feet long X 5.5 feet wide. Typical example is FRUSA.
iii)	Folding, Rigid Arrays	1170 watts - each panel 25 feet long X 4.2 feet wide. In planning stages for General Purpose Bus.
		8500 watts - each panel 58 feet long X 10 feet wide. Ultra lightweight concept in development at MBB.

(c) Gravity Gradient Booms

Current gravity gradient boom applications are primarily limited to Naval Research Laboratory (NRL) missions. Typically, appendages in this category are of the STEM-type with boom lengths ranging from 60 to 150 feet. Little is known at this time as to

gravity gradient boom requirements in the time frame of interest.

(d) Instrument Booms

Depending on the structural characteristics that are necessary to meet instrument mission requirements, appendages of the boom-type may employ one of several techniques to extend and/or retract instrument packages. For example, Apollo lunar science booms used the extendible/retractable STEM principle, whereas other experiments with more critical torsional requirements might use folding lattice structural concepts such as the Astromast. Typically, boom lengths range from 5 to 75 feet.

8.2.3 Design Considerations for Appendages

Important program decisions will have to be made in the design of future spacecraft for launch and subsequent servicing by the Space Transportation System. If the spacecraft has been modularized to the subsystem and experiment level, the question still remains as to what configurations of appendages, such as described in Section 8.2.2 above, best suit future servicing mission environments. Management and engineering must, therefore, assess whether appendages should be:

(a) Designed to survive docking loads induced by either the Shuttle Orbiter or Space Tug.

(b) Designed such that they can be partially retracted and/or serviced or replaced.

(c) Designed such that they can be ejected prior to docking and be subsequently replaced during servicing.

(d) Designed to withstand the Tug acceleration/deceleration loads that might be experienced in the return of a payload from geosynchronous orbit to Shuttle Orbiter attitudes.

i) In the first case, some weight and cost penalty have to be paid to achieve the desired structural characteristics for the appendage to withstand loads during the servicing operation. However, the calculations of Section 8.2.4 indicate that long, flexible appendages, as typified by the CTS solar panel array, stand a better than even chance of surviving Tug-induced docking loads assuming that the currently projected closure rates can be carefully controlled. The inherent flexibility of the working example enables the appendage to absorb loads, whereas other more rigid forms of appendages may risk some damage. Future appendage configurations should, therefore, be rigorously analyzed to determine their structural adequacy when subjected to the variety of momentum exchanges that will occur during docking manoeuvres. This applies not only for the low earth orbit missions where payloads have to be placed within the cargo bay using the Shuttle Remote Manipulator System (RMS), but also for Tug rendezvous and docking motions.

ii) The second case, introduces the possibility of designing the appendages such that they can be partially retracted to prevent damage, or fully retracted to be serviced by either Orbiter or Tug manipulator equipment. During NASA-Goddard's early work on the Earth Observatory Satellite program (now called the "Multi-Mission Spacecraft"), the so-called unique assembly appendages, such as the rigid solar panel array, SAR and K-band antennae, were to be exchanged using the Shuttle RMS in conjunction with special end effectors. However, the level of definition of the RMS and end effectors has not as yet reached the stage where a determination of their usefulness in this role can be made.

The partial retraction or servicing of appendages introduces a new and significant dimension on overall spacecraft program design and planning. As a first step, it will be necessary to assess the costing and reliability aspects of the hardware to determine the servicing benefits for a particular mission. Having established the overall mission life for the spacecraft, the most cost effective relationship between this and the desired design characteristics to achieve a certain life for the various appendage subsystems must be predetermined. As an example, communication satellite subsystems such as batteries, TWT's and bearing assemblies are currently the prime limitations to the lifetime of the spacecraft. Current estimates by COMSAT indicate that a 5 year spacecraft life can now be achieved, a 7 year life is a design goal and 10 years is debateable.

Assuming that the decision has been made to provide a serviceable spacecraft design, the various subsystems should be arranged such that the service unit has direct access to them. In the case of geosynchronous communications satellites being serviced by the Tug, all appendages such as antennae and solar panel arrays would require placement on the earth-facing side of the spacecraft to avoid interference with the service unit.

The next area for consideration is the need for an appendage extend/retract capability. This feature will be almost essential to provide the service unit or manipulator with a manageable package that can be readily exchanged. Having even a partial retract capability might also minimize the possibility of damage due to docking loads. However, the

additional design complexity that would have to be introduced to achieve this function should be assessed in light of its contribution to overall spacecraft cost, weight and reliability. For example, to guarantee a one shot capability, it is not inconceivable that the "designed-in" reliability and redundancy aspects of the retract components would have to be of a level higher than virtually any of the other major spacecraft assemblies.

Assuming that the appendage is to be removed for replacement, then the problem of making and breaking of RF joints, slip rings and TWT interfaces will have to be addressed. Extremely accurate alignment of the appendage package with respect to its mating interface on the spacecraft is especially critical in the case of the latter to avoid RF leaks.

A fold-out rigid solar array is generally considered to be easier to retract for servicing, or to reduce the effects of impact during docking than flexible extendible arrays. However, a major inconsistancy of purpose is then introduced in that the current philosophy for achieving the required panel stiffness in rigid arrays is to lock all hinges and pivots. Therefore, considerable stiffness would be lost once retraction had been initiated.

Providing solutions can be found for the above, the appendage could be configured for stowage inside a box-like container similar to other subsystems and experiments. It could then be handled in the service mode by a device such as the Special Purpose Manipulator System (SPMS) currently being developed for Goddard's MMS program. Dual latches would be employed for package tie-down to the spacecraft structure.

iii) It may be feasible to eject certain appendages that are either worn-out or subject to damage during docking manoeuvres. These would then be replaced during the servicing mode. However, many of the appendages might be critical to a rendezvous/docking operation, and careful trade-off studies would be necessary to establish optimum ejection time lines during this portion of a mission. Again, the appendage would have to be extendible from a package to make servicing possible, but a retract capability would not be required.

iv) Present studies by Martin Marietta and COMSAT Corporation indicate that it is not cost effective to return most spacecraft from geosynchronous orbit to earth for ground refurbishment. This operation would involve an initial pick-up of the spacecraft by the Tug, which would then return the payload to the Orbiter for earth re-entry. During a possible geosynchronous to low earth orbit exchange, spacecraft appendages would be subjected to accelerations and decelerations imparted by the Tug. While many of the comments already covered in (i), (ii) and (iii) would also apply in this case, an assessment of the induced loads would be required to determine structural adequacy.

8.2.4 Docking Load Effects

The following preliminary calculations to determine the docking load effects on a typical appendage use the CTS flexible solar panel array as a working example. This array is very representative of the type of spacecraft appendage that could be considered susceptible to damage during docking. While the results of this "first look" analyses are encouraging, a more detailed assessment is recommended before drawing final conclusions.

8.2.4.1 Subject: Shuttle STS - maximum array tip deflection as a consequence of a 10,000 lb. payload (Tug) - 1,000 lb. (spacecraft) velocity exchange.

8.2.4.2 Conditions: Assume a 10,000 lb. Tug moving with a linear velocity of 0.20 fps and contacting a 1,000 lb. spacecraft at rest (0 fps).

Assume that the payload and the spacecraft will move, subsequent to contact, with a linear velocity determine by conservation of momentum considerations as a single body.

Thus:

$$10{,}000 \times 0.20 + 0 = (10{,}000 + 1{,}000)\ V$$

$$V = \frac{10{,}000}{11{,}000} \times 0.20 = 0.182 \text{ fps}$$

For the spacecraft and its appendages, the instantaneous change in velocity V will be V-0 = .182 fps - 0 = 0.182 fps.

The array can, therefore, be treated as an elastic system subject to an initial velocity input.

8.2.4.3 Analysis

In order to obtain the simplest possible answer, assume the array to be a single degree of freedom system (e.g., a weightless beam with a tip-mass).

Assume the array and the spacecraft to be the CTS with a first bending natural frequency of 0.10 Hz.

The solution to the problem of a single degree of freedom system subject to an initial velocity input is:

$$x\,(\text{displacement}) = \frac{\dot{x}(0)\, e^{-\xi \omega_n t}}{\omega_n \left[1-\xi^2\right]^{1/2}} \sin \omega_n \left[1-\xi^2\right]^{1/2} t$$

(Ref 1 4.2-5)

where $\xi = c/c_{crit.}$

$x(0)$ = change in initial velocity ΔV (previously).

Since $c/c_{crit.} \cong .01$ for the CTS array

$$\left[1-\xi^2\right]^{1/2} \cong 1$$

also for $x \rightarrow x_{max}$ $\omega_n t' = \pi/2$

where $e^{-\xi \omega_n t'} = 1$ also

The maximum displacement of the array tip:

$$\underline{\underline{x_{max}}} \cong \frac{\dot{x}(0)}{\omega_n}$$

$$\cong \frac{.20 \times 12}{.10 \times 6.28} = \underline{\underline{3.83 \text{ ins.}}}$$

8.2.4.4 Discussion

The tip deflection of 3.83 in. is not sufficiently large to be reason for concern.

The corresponding tip force, i.e., that tip force causing an equal tip deflection can be calculated from the expression:

$$X_{TIP} = \frac{P_{TIP}\, \ell^3}{3 E I}$$

$$P_{TIP} = X_{TIP} \left(\frac{3 E I}{\ell^3} \right)$$

For the CTS BI-STEM boom:

$$E \cong 30 \times 10^6 \ \text{lb/in}^2$$

$$I = \pi \left(\frac{1.38}{2} \right)^3 \times 2 \times .007 = .021$$

$$\ell = 270 \ \text{in} \qquad X_{TIP} = 3.83 \ \text{in}$$

$$P_{TIP} = \frac{3 \times 30 \times 10^6 \times 21 \times 10^{-3}}{(2.7)^3 \times (10^2)^3} \times 3.83 = .345 \ \text{lb}$$

(conservative)

The corresponding equvalent tip acceleration is of the order of:

$$\frac{.345}{20} = \underline{\underline{.017 g}}$$

(conservative)

The incremental bending stress, i.e., the bending stress caused by the velocity change in addition to the stresses already present will be of the order of:

$$\sigma = \pm \frac{P_{TIP}\, l\, d}{2I} = \pm \frac{.345 \times 270 \times 1.38}{2 \times .021}$$

$$= \pm \underline{\underline{3060 \text{ lb/in}^2}}$$

(conservative)

The above values confirm the non-critical nature of the velocity transfer from the Tug (10,000 lbs.) to the spacecraft (1,000 lbs.) under joint motion.

8.2.5 Conclusions & Recommendations

(a) Based on a preliminary assessment using a CTS flexible solar panel array it is feasible to design future spacecraft appendages to withstand docking loads induced by the Tug or Orbiter systems. It is recommended that further studies be pursued in this area and that other candidate structures be addressed.

(b) It is technically feasible to retract many spacecraft appendages either to minimize the impact of docking or delivery loads, or to enable replacement of the appendage during a servicing operation. Trade-off studies are recommended to establish the degree of replacement and the level at which a retraction/replacement capability becomes cost effective.

(c) A major problem in providing a servicing capability for appendages is the making and breaking of RF joints, TWT's, slip rings and other components that require accurate mechanical and/or electrical alignment. It is recommended that studies be conducted in this area to develop new techniques for coupling these important interfaces.

8.3 Economics of Geo-Synchronous Servicing

Investigation Plan (Derived from the Statement of Work)

(i) Relate the operational Space Shuttle program to the anticipated Canadian satellite program (including number of spacecraft).

(ii) Establish what Canadian satellites are candidates for servicing and what are not. Discuss anticipated U.S. satellite requirements in the 1980's.

(iii) Review the conclusions re satellite servicing, reached by Martin Marietta and COMSAT.

(iv) Establish a rationale for the level of servicing required with respect to:

Failure Repair
Routine Maintenance

(v) Discuss communication satellite failure modes.

(vi) List all assumptions.

(vii) Determine the extent of modularization for serviceable satellites. Relate DDT&E costs for modularized satellites to non-serviceable satellites. Estimate what percentage of the total satellite cost will be apportioned to the modules.

(viii) Relate cost of each servicing method to expendable spacecraft cost.

(ix) Review non-standard events (satellite update, changing requirements).

(x) General Conclusions.

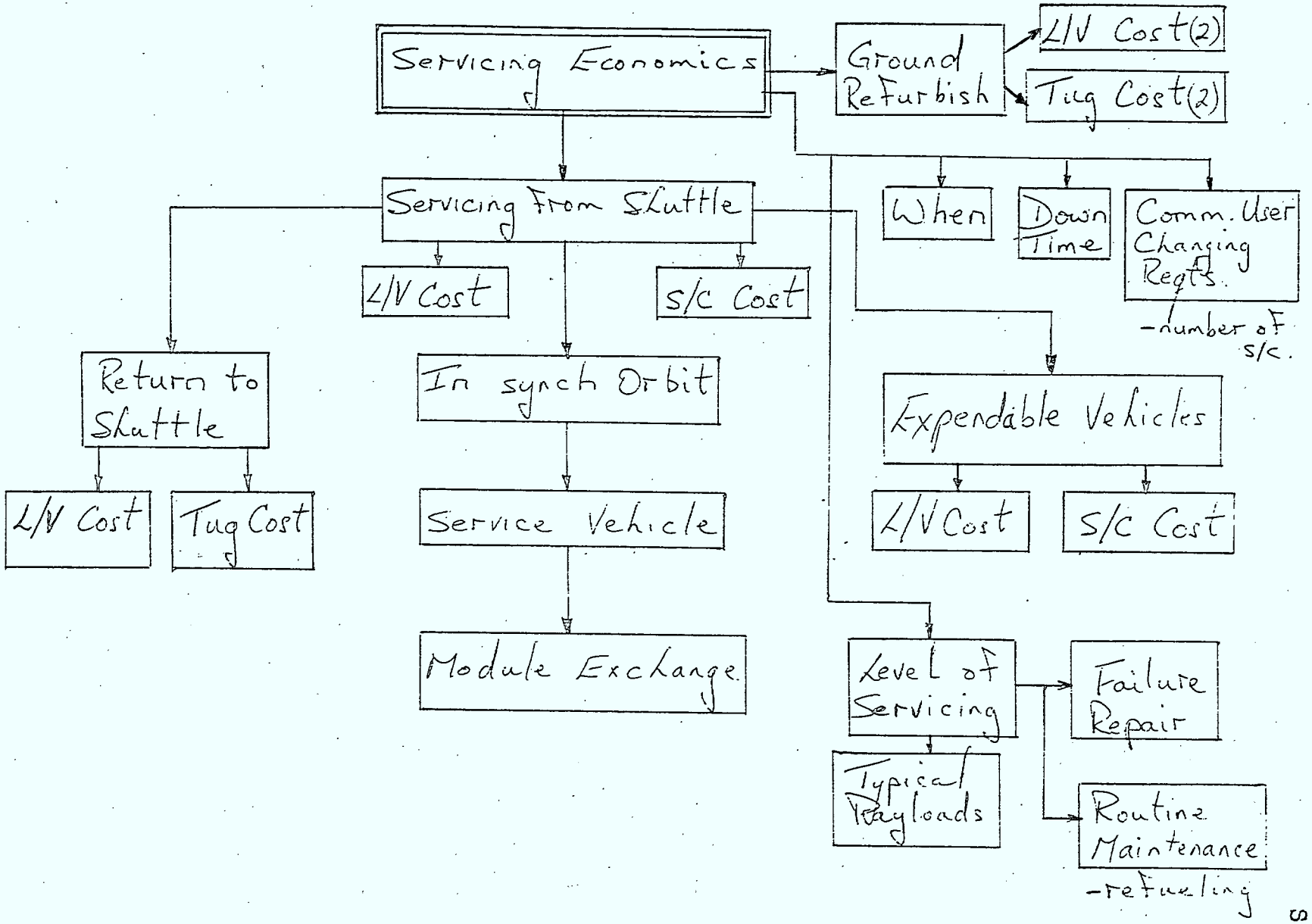
Servicing Economics
Ground Refurbish
L/V Cost(2)
Tug Cost(2)
Servicing From Shuttle
L/V Cost
S/C Cost
When
Down Time
Comm. User Changing Reqts.
-number of S/C.
Return to Shuttle
L/V Cost
Tug Cost
In synch Orbit
Service Vehicle
Module Exchange
Expendable Vehicles
L/V Cost
S/C Cost
Level of Servicing
Typical Payloads
Failure Repair
Routine Maintenance
-refueling

Fig 8-5

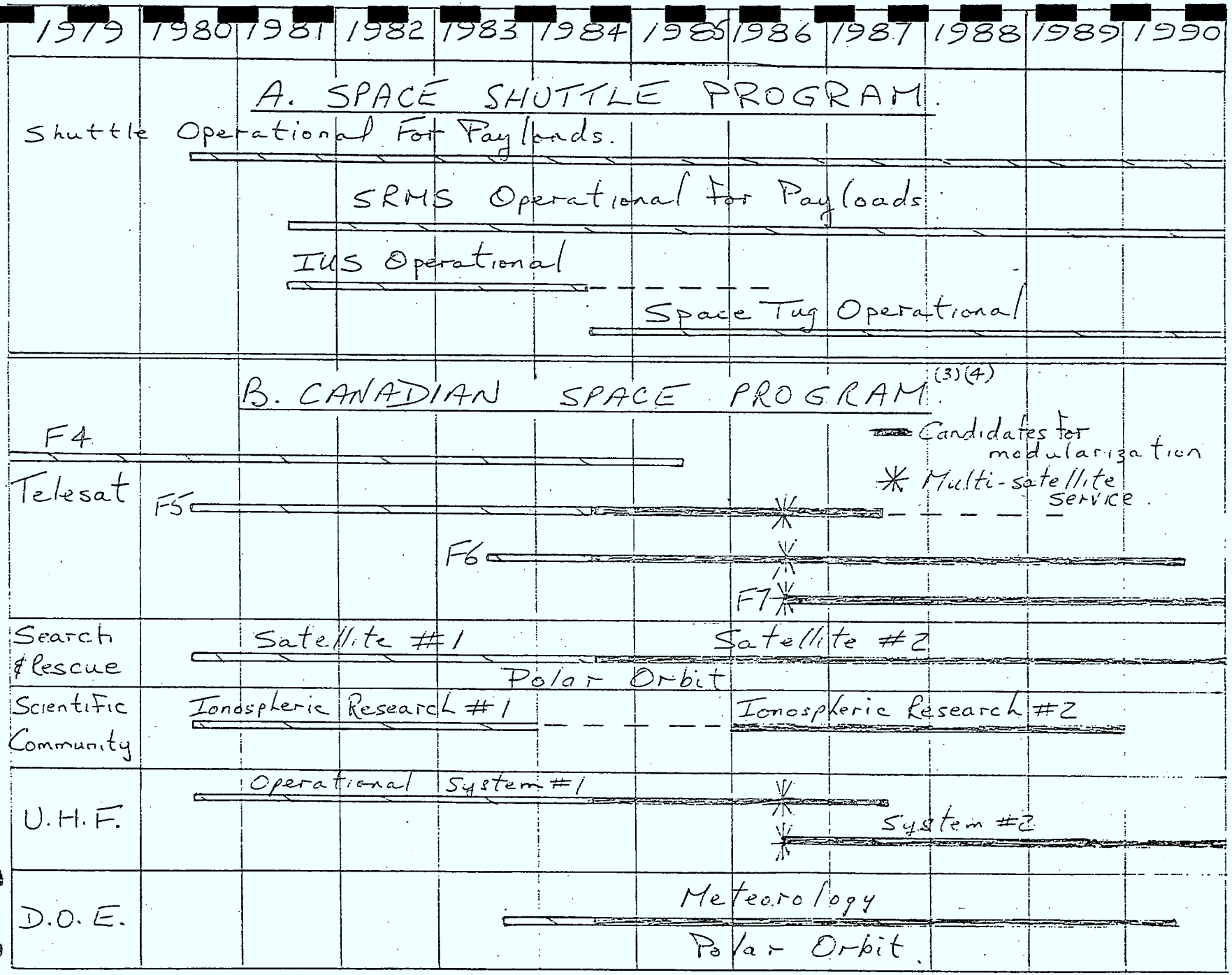
1979
1980
1981
1982
1983
1984
1985
1986
1987
1988
1989
1990
A. SPACE SHUTTLE PROGRAM.
Shuttle Operational For Payloads.
SRMS Operational for Payloads
IUS Operational
Space Tug Operational
B. CANADIAN SPACE PROGRAM (3)(4)
Candidates for modularization
* Multi-satellite service.
F4
Telesat
F5
F6
F7
Search & Rescue
Satellite #1
Satellite #2
Polar Orbit
Scientific Community
Ionospheric Research #1
Ionospheric Research #2
U.H.F.
Operational System #1
System #2
D.O.E.
Meteorology
Polar Orbit.

Fig. 8-6

Based on the information presented in Page 8-26, the following future Canadian satellites are candidates for serviceable construction.

(a) Telesat F5 on.

(b) Search & Rescue #2.

(c) Scientific Research #2.

(d) UHF #2 (possibly #1).

(e) DOE #1.

Notes:

Servicer/Space Tug will not be available until 1984. Satellites launched in the early 1980's will be designed and tested in the late 1970's. A decision to build these satellites of a modular construction will minimize the need for gross redesign and qualification later on if a servicing requirement is introduced. Further, modularization adds increased payload flexibility ref. Spar-R.677 - GPB study.

For this study, only the communication satellites (a) & (d) above will be considered since all these spacecraft will be in similar HEO's and the possibility of servicing several similar satellites increases the cost effectiveness of the servicing operation.

SUMMARY OF GENERAL CONCLUSIONS REACHED BY COMSAT & MARTIN MARIETTA

1. A single development of an on-orbit servicer is recommended.

2. Expendable satellites are cost effective when satellite lifetime meets program lifetime requirements. Satellite lifetimes of 5 years can be achieved. Satellites probably obsolete in 7 years. However, design update via servicer will extend program life.

3. Cost reimbursement policies can be an important factor in which form of servicing is adopted.

4. The on-orbit servicer maintenance concept is recommended (based on a large number of in-orbit satellites).

5. In-orbit service savings (HEO) should be at least 30% over the proven expendible mode to ensure user acceptance. Demonstrations of reliable servicing must be completed before user acceptance can be expected.

6. On-orbit maintenance cost effectiveness increases with the number of serviceable orbiting satellites. Expendable mode is most cost effective for low cost, minimum quantity satellite programs.

7. Serviceable satellites can be designed with acceptable weight, design and volume effects.

8. The module exchange form of servicing is recommended.

9. Scheduling delays of several months are tolerable for many servicing requirements.

10. Widespread acceptance of on-orbit servicing at HEO will not result until the 1990's.

11. Docking on the anti-earth face will be most practical because no interference with antennas and solar array will result and all servicing could be completed with a single docking.

12. Ground refurbishment is seldom cost effective.

13. Redesign of operational satellites for servicing will significantly reduce the cost advantages of servicing for that satellite program.

14. Two design failures (new satellite) can be expected in orbit, one of which will require servicing. The first failure will usually occur approximately 1 year after launch.

TABLE 1. COMMUNICATIONS/NAVIGATION SATELLITES

SATELLITE	1974 SSPD DATA			INDEPENDENT ESTIMATE
	WEIGHT (KG)	DESIRED TIME IN ORBIT (YR)	AVERAGE NUMBER '85-'90	
INTERNATIONAL COMMUNICATIONS SATELLITES	1,472	10	14	9
DOMSAT "A"	261	7	4	10
DOMSAT "B"	1,472	10+	7 1/2	
DISASTER WARNING	583	5	1 1/2	2
TRAFFIC MANAGEMENT	298	5	3	7
FOREIGN COMMUNICATIONS	308	7	3	12
DOMSAT "C"	868	7	4	3
COMMUNICATIONS R&D	--	--	0	2
WEIGHTED AVERAGE	1,050	7		
TOTALS			37	45

COMSAT

FIG. 8-7 (REF 1.10 PAGE 59)

TYPICAL SUBSYSTEM FAILURES OF COMMUNICATIONS SATELLITES

SATELLITE	COMPONENT FAILURE	TYPE	REPARABLE
COURIER	DECODER	DESIGN	YES
TELSTAR	DECODER	DESIGN	YES
	BATTERY	RANDOM	YES
RELAY	POWER CONDITIONING	RANDOM	YES
SYNCOM	TELEMETRY	RANDOM	YES
EARLY BIRD	FUEL DEPLETION	WEAROUT	YES
NIMBUS	SOLAR ARRAY BEARINGS	DESIGN	DIFFICULT
ATS-5	ATTITUDE CONTROL	DESIGN	NO
TACSAT	STRUCTURAL BEARINGS	DESIGN	DIFFICULT
DSCS-2	DEPLOYABLE STRUCTURES	DESIGN	NO
TELESAT	POWER CONDITIONING	RANDOM	YES
INTELSAT II	BATTERY	RANDOM	YES
	PROPELLANT FEED	DESIGN	PROBABLY
	PROPELLANT RELIEF VALVES	DESIGN	YES
	SOLAR ARRAY DEGRADATION	DESIGN	PROBABLY
INTELSAT III	STRUCTURAL BEARINGS	DESIGN	DIFFICULT
	LOW ORBIT	RANDOM	YES
	BATTERY	RANDOM	YES
	RECEIVER	DESIGN	YES
	TRANSPONDER	RANDOM	YES
	EARTH SENSOR	DESIGN	YES
INTELSAT IV	RECEIVER	DESIGN	YES
	THRUSTER	DESIGN	YES
	EARTH SENSOR	RANDOM	YES
	TELEMETRY BEACON	RANDOM	YES

Fig 8-8
(Ref 1.10 Page)

CONSEQUENCES OF SUBSYSTEM FAILURE - EARLY SATELLITES

SATELLITE	COMPONENT	EFFECT	REPAIR TIME ALLOWED	REMEDIAL ACTION	
				FAILED SATELLITE	OTHERS
COURIER	DECODER	LOST COMMAND	DAYS	--	--
TELSTAR	DECODER	LOST COMMAND	DAYS	--	--
	BATTERY	LOW ECLIPSE POWER	MONTHS	--	--
RELAY	POWER COND.	LOST 3 WEEKS	DAYS	SELF-REPAIR	--
SYNCOM	TELEMETRY	LOST INFORMATION	MONTHS	--	--
EARLY BIRD	FUEL DEPLETION	LOST POSITION	YEARS	--	--
NIMBUS	SOLAR ARRAY BEARINGS	LOST POWER	HOURS	--	--
ATS-5	ATTITUDE CONTROL	LOST ATTITUDE	WEEKS	--	--
TACSAT	STRUCTURAL BEARINGS	LOST ATTITUDE	SECONDS	--	--
DSCS-2	DEPLOYABLE STRUCTURES	LOST ATTITUDE	DAYS	--	--
TELESAT	POWER COND.	LOST POWER	DAYS	--	--

Fig 8-9 (Ref. MO Page 81)

DESIGN FAILURES OR ANOMALIES IN COMMUNICATIONS SATELLITE SUBSYSTEMS

SATELLITE	COMPONENT	NUMBER FAILURES OBSERVED	NUMBER NEEDING REPLACEMENT	TOTAL SATELLITES INJECTED	TOTAL SATELLITES LAUNCHED
INTELSAT II	PROPELLANT FEED	3	3	3	4
	RELIEF VALVES	3	3		
	SOLAR ARRAY	1	0		
INTELSAT III	STRUCTURAL BEARINGS	5	5	5	8
	RECEIVER	1	1		
	EARTH SENSOR	5	0		
INTELSAT IV	RECEIVER	4	4	7	8
	THRUSTER	1	1		
	STRUCTURAL BEARINGS	2	0		
	EARTH SENSOR	1	0		
	TOTALS	26	17	15	20

COMSAT

Fig 8.10 (Page 1.10 Page 9)

CONSEQUENCES OF SUBSYSTEM FAILURE -- INTELSAT SATELLITES

SATELLITE	COMPONENT	EFFECT	REPAIR TIME ALLOWED	REMEDIAL ACTION	
				FAILED SATELLITE	OTHERS
INTELSAT II	BATTERY	LOW ECLIPSE POWER	MONTHS	--	--
	PROPELLANT FEED	LOST POSITION	MONTHS	--	--
	PROPELLANT RE-LIEF VALVES	LOST TANK PRESSURE	MONTHS	--	--
	SOLAR ARRAY DEGRADATION	POWER DEGRADATION	YEARS	--	+COVER
INTELSAT III	STRUCTURAL BEARINGS	LOST ATTITUDE	SECONDS	INVERT	+HEATERS
	LOW ORBIT	WRONG POSITION	WEEKS	REPOSITION	--
	BATTERY	LOW ECLIPSE POWER	MONTHS	--	--
	RECEIVER	LOST AMPLITUDE	WEEKS	--	FIXED
	TRANSPONDER	LOST CHANNEL	DAYS	--	--
	EARTH SENSOR	FALSE PIP	MONTHS	ANOTHER	+TEST
INTELSAT IV	RECEIVER	LOST AMPLITUDE	MONTHS	--	QC
	THRUSTER	LOST SOME LIFE	YEARS	ANOTHER	+CONNECT.
	EARTH SENSOR	EXTRA NOISE	MONTHS	--	--
	TELEMETRY BEACON	LOST REDUNDANCY	MONTHS	--	--

Fig 8-11 (Rev 1-10 Page 23)

SCHEDULING DELAYS OF SEVERAL MONTHS ARE TOLERABLE
FOR MANY SERVICING REQUIREMENTS

INTERMITTENT OPERATION

EXAMPLES: THRUSTERS FOR N-S STATIONKEEPING

BATTERY FOR ECLIPSE OPERATION

FAILURE WARNING

EXAMPLE: BATTERIES OFTEN GIVE A YEAR'S WARNING

REPLACE REDUNDANT ELEMENTS

EXAMPLE: REPLACE FAILED EARTH SENSOR

DEGRADED OPERATION ACCEPTABLE

EXAMPLE: FAILED TRAVELING WAVE TUBE

8-35

FIG 8-12
(REF 1.10 PAGE 65)

LEVEL OF SERVICING

1. General

Two major servicing concepts related to satellite construction are to be addressed. The first is the replaceable "module" approach as recommended to MSFC by COMSAT and Martin Marietta. The other is the replaceable "panel" approach as proposed in SPAR-R.677 for the GPB.

For spin stabilized spacecraft in geosynchronous orbit (dual body spinner) the former method may be preferred while for body stabilized spacecraft either method is possible depending on the degree of servicing anticipated.

While the module replacement approach is cheaper it could be developed such that the only non-modularized portions of the spacecraft are the basic structure and harness and the thermal control subsystem. Since these two subsystems comprise only 5 to 6% of the total spacecraft cost, the cost of replacement modules will be close to the cost of a satellite. Modularization becomes much more attractive when the number of modules to be replaced is low (correction of random or design failures) and when there are a large number of satellites to be serviced (as is the NASA case).

Also, should NASA use the single servicer approach (as recommended) for all anticipated low and high orbit missions, Canada may opt to pursue the module replacement approach if the NASA servicing equipment cannot easily be adapted for panel replacement.

2. Partial Modularization - Replaceable modules limited to items of lower reliability (mechanical drives etc. which will not be designed to be fully redundant and cannot be expected to survive for the planned life of the program). All electronics would be fully redundant.

3. Full Modularization - only structure and harness, thermal system and possibly large solar blankets and antennas will not be replaced. In this case up to 90% of the spacecraft cost will be "modules". Since an in-orbit replaceable module will cost more than a standard bolt-on IMU and since the servicer will use up more orbiter payload space than a spacecraft, this approach does not appear to be cost effective.

4. Routine and Preventative Maintenance - Replacement of items which have not been designed to last the design life of the satellite (i.e. fuel, thrusters, batteries, bearings), which have a predictable operating life which is less than the design life of the spacecraft. This is cost effective if the cost of replacement modules is over 30% less than the cost of the spacecraft).

SUBSYSTEMS IN RELIABILITY MODEL

SUBSYSTEM	REQUIRED	PROVIDED	FAILURE RATE (10^{-9}/HR)	MODULE WEIGHT (LB)
TRANSPONDERS	35	43	3000	60
RECEIVERS	1	4	6000	66
ATTITUDE CONTROL	1	2	1500	60
ONBOARD PROCESSOR	1	2	700	60
MOMENTUM WHEEL	1	2	700	60
BATTERIES	4	4	500	75
TT&C	1	2	4000	75
POWER CONDITIONING	2	2	100	60
TANKS	4	4	400	120
THRUSTERS	1	2	1000	120

8-38

Fig 8-13 (Rep 1.10 Page 49)

WAVEGUIDE CONNECTOR

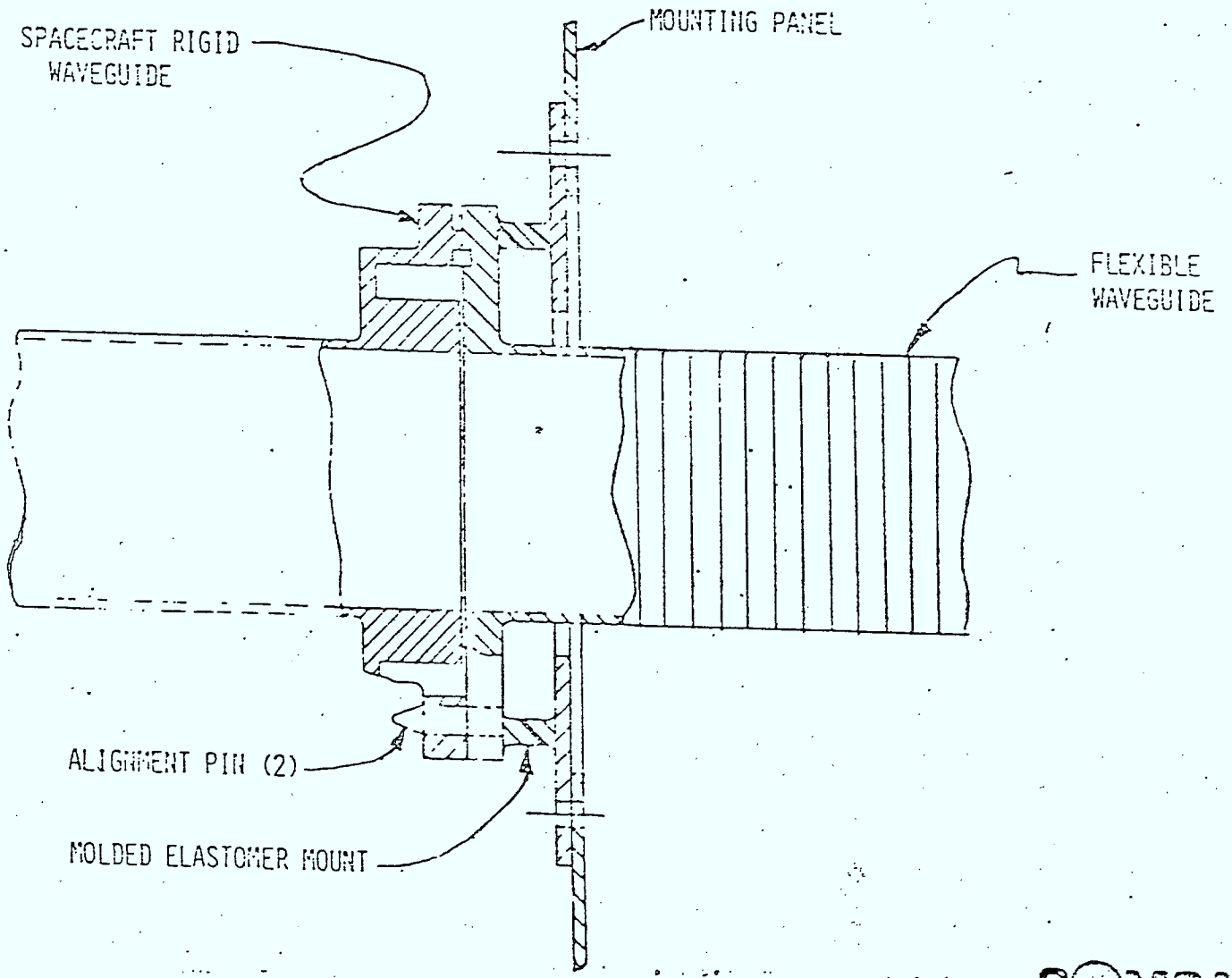

Allows for expected misalignment between module and s/c. An RF choke joint & gasket is provided to minimize RF leakage.

FIG 8-19 (REF 1.10 PAGE 45)

WAVEGUIDE CONNECTOR, INSTALLED

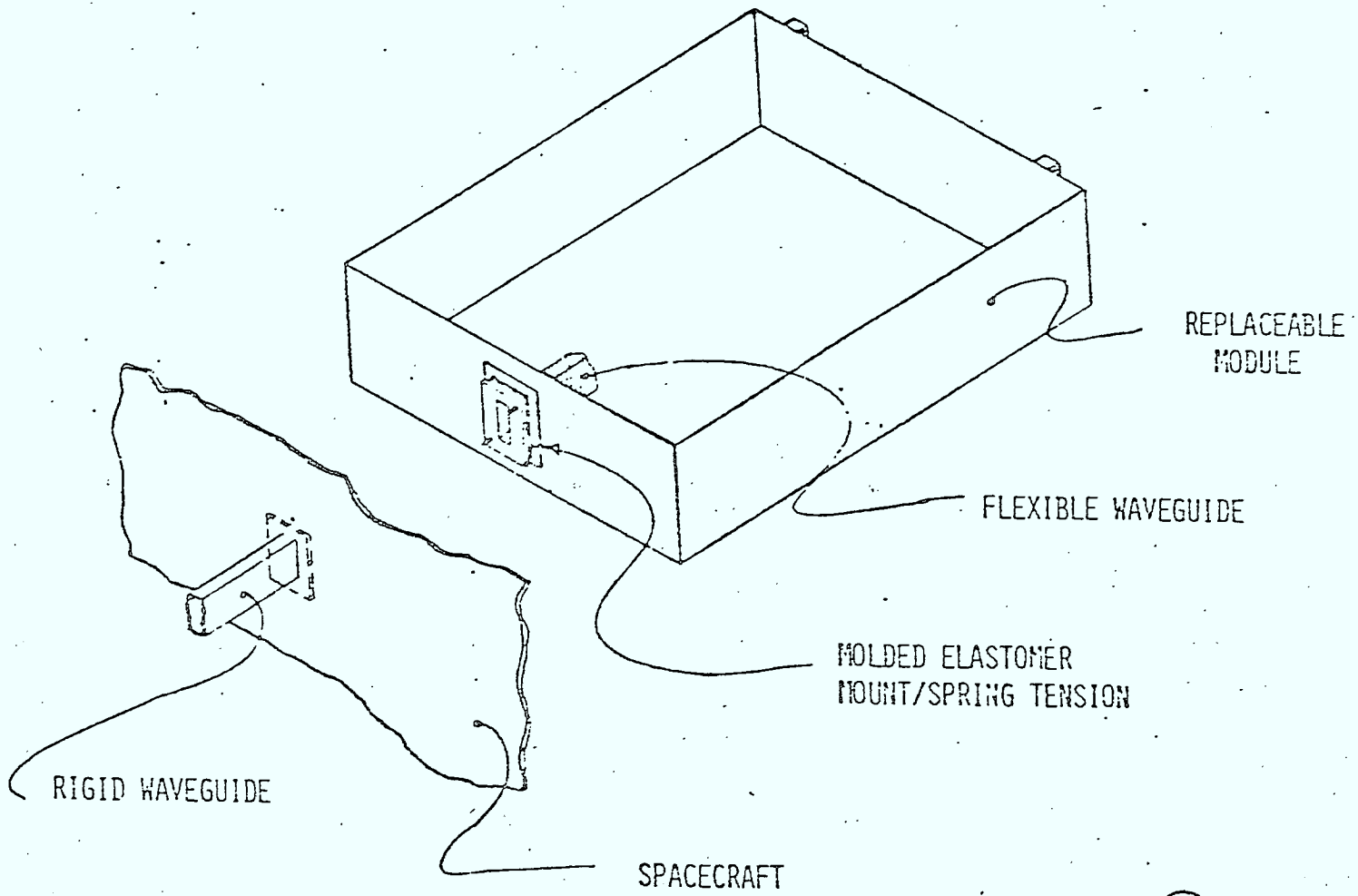

- Key development item.

Fig 8-15 (Ref. 1.10 Page 47)

8-40

ASSUMPTIONS

1. Thor Delta launches will be available through the 1980's.

2. Only geosynchronous satellites considered.

3. All spacecraft (conventional or serviceable modularized) are built to equal reliability standards.

4. The servicer will be developed by NASA or a joint NASA/ Canadian program. The servicer "rental" has been established and included in the cost breakdown. Multi-satellite servicing has been considered for possible module replacement in an on-orbit backup satellite.

5. An operational Space Tug will be available by 1984. Expendable servicers and tugs not considered. Servicer won't be used before 1984.

6. No DDT&E costs are included in any flight spare hardware except additional costs directly related to modularization or servicing.

7. Shuttle launch costs will be computed on a cost re-imbursement policy.

8. New Canadian satellites will be designed to be compatible with a Shuttle launch i.e. no additional costs to make an existing satellite Shuttle compatible have been considered.

9. IUS launch costs are approximately the same as Space Tug launch costs i.e. $1.2M ref. Aerospace Daily September 18, 1975.

10. Each Canadian mission will use 3 satellites in expendable mode (2 in-orbit, 1 spare) or 2 satellites for in-orbit servicing and 1 complete set of modules.

THE COST OF MODULAR CONSTRUCTION

It is assumed that the following spacecraft items will not be replaced or serviced.

(a) Structure and Harness
(b) Thermal Subsystem
(c) Solar Arrays
(d) Large Antennas & Feeds

Approximately 70% of the total modularized spacecraft weight can be modules. These modules will be:

TWT(s)
Receiver(s)
ACS including RCS
Batteries, T&C, Converters
Fuel (Propulsion)

In a satellite with 70% modules by weight, the cost of the modules will be approximately 70% of the total spacecraft cost i.e. a $15M satellite will contain $10 1/2M of modules.

The above modularized satellite will be 20% heavier than a "conventional" satellite. For a 1000 lb. spacecraft, this could increase the launch costs (Shuttle) by $.6M (i.e. $3000/lb.).

DDT&E Costs - Modularized Satellites Vs Conventional Satellites

From a review of SPAR-R.677 - General Purpose Bus (GPB) Study. The cost of developing a modularized bus will be approximately the same as the cost of developing a new "conventional" spacecraft. However, for in-orbit servicing, new developments such as waveguide sealing will increase DDT&E costs somewhat. Also, the cost of the flight satellite will be more than for a non-serviceable spacecraft.

LAUNCH COST REIMBURSEMENT POLICY

Shuttle launch costs will be divided amongst the users based on a weight or volume ratio for the payload bay of the Orbiter and a weight ratio for Tug use.

Assume all satellites carried on a Shuttle mission are intended for geosynchronous orbit. The Space Tug has a capability of delivering 7000 lbs. to synchronous orbit. If we predict a capability use ratio of 60%, then the Tug will deliver a 4200 lb. payload. This is equivalent to approximately 4 satellites.

After allowance is made for the space required in the orbiter bay for the Space Tug, there remains a 15' diameter by 25' long storage volume for these four spacecraft.

This is ample space for four spacecraft so that each user would pay one quarter of the total launch cost.

If a user were to launch a satellite servicer with modules instead of a satellite, more than one quarter of the available volume would be required by the servicer. Estimates of servicer size both at Spar and by Martin Marietta give 10' diameter by 10' long. Therefore over 25% of the orbiter launch cost could be paid by the servicer user(s). However for this exercise the launch cost for a servicer has been assumed to be equal to a satellite cost.

	LAUNCH COSTS - BREAKDOWN	(1980 DOLLARS)
A.	Thor-Delta 3914	$19.7M
B.	Conventional spacecraft including AKM (build to print - CTS type)	$14 M
C.	Modularized spacecraft or GP Bus	$16.6M
D.	Shuttle Launch - assume that 4 satellites are delivered to synchronous orbit. Each of the six users pays $26M/4	$6 1/2M (Satellite or Servicer)
E.	Tug Launch	$ 1.0M (Satellite or Servicer)
F.	Servicer "Rental"	$ .4M
G.	1 Spacecraft Set of Modules $16.6M X .7	$11.6M

WEIGHT & COST BREAKDOWN - CONVENTIONAL AND MODULARIZED SPACECRAFT

Ref. (a) Spar internal memo dated September 11, 1975 "Costs for an Additional Build-To-Print CTS".

(b) GP Bus Study SPAR-R.677

Task	Wt(lbs)	% Total	Cost	% Total
			Conventional S/C (Flight)	
Program Management			$ 1.20M	11.1
Structure & Harness	163.4	23.2	.35	3.2
Thermal Subsystem	32.6	4.4	.15	1.4
Solar Array	137.3	18.7	1.85	17.1
AKM	-	-	.35	3.2
ACS, RCS	137.8	18.7	2.50	23.1
TWTs, Batteries, Antennas, Fuel	264.2	35.9	3.40	31.5
Integration (Test)	-	-	1.00	9.3
	735.3		$10.8M	100
			Modularized S/C (Flight)	
Program Management			$ .32M	2.20
Structure & Harness	146	15.0	.48	3.30
Thermal Subsystem	21	2.2	.27	1.86
Solar Array	120	12.4	2.54	17.4
AKM	-		.38	2.61
ACS, RCS, Fuel*	272	28.1	3.74	25.7
TWTs, Batteries* Antennas	409	42.3	4.27	40.0
Integration & Test	-		1.00	6.87
*Modules				
	968	100	$13.00M	100

Module Cost = 65.7% of spacecraft cost.

Module weight = 70.4% of spacecraft weight (excluding AKM).

COST COMPARISON - TYPICAL SATELLITE PROGRAM

The following compares the costs of a typical satellite mission when expendable or serviceable satellites are used. The mission life is assumed to be 10 years and the satellite life 5 years.

After one year a random (or design) failure is assumed to occur which results in the need to replace (or service) one satellite. If the "expendable" cost is higher, the relative cost figure is shown with a -, if the "service" cost is higher a + is used.

A. Initial Program to Satellite Launch

	Relative Cost $M
Program Definition	+$0
DDT&E including Qualification	+ 3.0
3 Flt S/C or 2 Flt S/C and 1 set of modules	+ 2.8
Send 2 S/C to ETR	+ 0
Launch C/O & Sustaining	+ 0
Shuttle launch (2 S/C)	+ .6
S/C C/O in Orbiter	+ 0
Tug launch (2 S/C)	+ .2
Tug return	0
Orbiter return	0
	+$6.6M

B. Random (or Design) Failure - 1 S/C

Rework Spare S/C (update) or Modules	+ 0
Deliver Spare S/C or Modules to ETR	+ 0
Replace Spare S/C or Modules	-10.0
Launch C/O & Sustaining S/C or Servicer	+ 0
Servicer "Rental"	+ .4
Shuttle launch (1 S/C or servicer)	+ 0
S/C or servicer C/O	+ 0
Tug launch	- .5
Tug return	+ .5 (servicer)
Orbiter return	+ 1.0 (servicer)
	-$8.6M

Note: If both in-orbit S/C are fixed or replaced, the cost effectiveness of servicing increases considerably.

C. After 5 Years - Update or Replace S/C

	Relative Cost $M
Update spare S/C or modules	+ 0
Build 2 S/C or 2 sets modules	- 5.0
Deliver 2 S/C or 2 sets modules to ETR	+ 0
Launch C/O & sustaining	+ 0
Shuttle launch (2 S/C or services)	+ 0
Servicer rental	+ .4
S/C or servicer C/O	+ 0
Tug launch (2 S/C or servicer)	+ 0
Tug return	+ .5
Orbiter return	+ 1.0
	-$3.1M

Net Program Cost = +$6.6M - $8.6M - $3.1M = -$5.1M

Note: This is a minimum saving that can be expected through servicing. Further servicing requirements as a result of design or random failure will considerably increase the cost effectiveness of servicing .

HIGH ORBIT CASE - SCHEDULED MAINTENANCE COST COMPARISON - SINGLE SATELLITE

Expendable S/C (A)		Expendable S/C (B)		(C)		Refurbishable S/C (D)		(E)	
Thor Delta Launch	$M	Shuttle Launch	$M	Ground Refurbish	$M	Service In Synch. Orbit	$M	Service At The Orbiter	$M
1. Launch with S/C payload	19.7	1. Launch with tug & S/C payload (conv. S/C)	6.5	1. Shuttle launch with tug & docking payload	6.5	1. Shuttle launch with tug & servicer payload	6.5	1. Shuttle launch with tug & docking payload	6.5
2. Cost of add'l S/C	14.0	2. Tug & S/C launch (IUS?)	1.0	2. Tug & docking	1.0	2. Tug/Servicer launch Servicer rental	1.0 0.4	2. Tug launch	1.0
	33.7	3. Cost of add'l S/C	14.0	3. Grapple S/C	-	3. S/C Repair (Module Exchange using Pivoting Arm of SPMS)	11.6*	3. S/C capture	-
			21.5						
				4. Tug & S/C return to orbiter	1.0	4. Tug/Servicer return to Orbiter	1.0	4. Tug return	1.0
				5. Orbiter return to earth	6.5	5. Additional cost factor related to the greater cost of modularized satellites	2.6	5. S/C repair (SPMS or EVA)△	11.6*
				6. S/C Repair	9.8*		23.1	6. Tug launch	1.0
				7. Shuttle launch	6.5			7. S/C release	-
				8. Tug launch	1.0			8. Tug return	-
				9. Release S/C	-			9. Additional cost factor Note: A satellite with large deployed arrays must stow these prior to return to the Shuttle Orbiter	2.6
					32.3				23.7

* Cost of one S/C set of modules or spares

△ Cost of EVA not included

MULTI-SATELLITE SERVICING OF CANADIAN SATELLITES

As noted earlier, routine maintenance over a five year cycle can be cost effective particularly if a significant number of satellites can be serviced on the same tug launch. This servicing will include refueling, replacement of low reliability modules, batteries, bearing assemblies, etc.) and design updates. With reference to Page 8-26 a multi-satellite service of Canadian spacecraft could occur in 1986. At that time on a single tug launch, Telesat F7 and UHF #2 could be placed in orbit and Telesat F5 and F6 and UHF #1 could have modules replaced. Since the tug with its 7000# capability could handle this size of payload. On the other hand, if F5 and F6 and UHF1 could enjoy extended lives as a result of servicing the requirement for F7 and UHF2 may diminish.

Assuming that all the above satellites are required, this payload would use the entire orbiter payload bay. Therefore the total launch cost would be:

Shuttle Launch	$26M
Tug Launch inc. servicer	2.0M
	$28.0M

i.e. two Canadian satellites could be placed in geosynchronous orbit and three satellites could be serviced, all for a lower cost than two 3914 Thor-Delta launches. However, the operation would only be cost effective (relative to Shuttle launched new satellites) if the extent of the service or repair is low.

ADVANTAGES OF THE SHUTTLE/MODULARIZED SATELLITE APPROACH FOR NON-STANDARD EVENTS

It has been shown that the expendable satellite approach is to be favoured overall for small quantities of reasonably low cost satellites ($15M) if the planned program life is not much greater than the expected life of the satellite. However, modularized serviceable Canadian spacecraft can become quite cost effective when the following activities are carried out.

(a) Changing out of date equipment for new equipment so that the program life is considerably extended i.e. satellite obsolesence is avoided.

(b) Replacement of failed modules as random or design failures occur which would jeopardize the mission i.e. the module cost would be less than $4M, not $12M as might be required for a complete scheduled maintenance.

ADDITIONAL COST FACTORS

Some additional cost factors related to the reliability of the servicing operation should eventually be addressed but are not included in this report. These are costs incurred as a result of failure or damage, discovered during checkout of the satellite in the orbiter prior to the tug launch to high earth orbit.

Also, the possibility of failure of, or loss of, a satellite during a tug launch exists.

Since the CTS (flight) spacecraft was completed in July 1975, just prior to the full spacecraft vibration test to flight levels, several failures have occurred which can be attributed to either operator error or random occurrances. None have been attributed to design failures so that no design changes were required. What is significant is that random failures are not infrequent and often the determination of what has failed is a complex task. The complexity becomes compounded if the investigation has to take place in orbit rather than in a ground test facility. Further, once the cause of failure has been isolated, considerable thought as to the possible side effects is required, i.e. overstressing of other circuits. Finally, in effecting a repair scheme other damage or failure may result if exacting and detailed procedures are not followed.

General Conclusions

1. Scheduled servicing of Canadian satellites, either in orbit or, at the Orbiter may be cost effective if the Part Factor

$$\frac{\text{(cost of the replaced modules)}}{\text{spacecraft unit cost}}$$

can be kept low.

This means large expensive items such as solar arrays and antennas would not be routinely replaced.

2. The methods used to derive launch, spacecraft and parts, costs will determine the degree of cost effectiveness of servicing.

3. Repair of early satellite failures (design or random) is cost effective since only a small number of modules will be replaced. (Ref. COMSAT conclusion "Cost of a servicing operation should be small compared to initial satellite cost".)

4. Satellites should be continued to be designed for redundancy of long life components to allow for random failure.

5. The reliability of the servicing operation is TBD. A demonstration of reliability plus a significant cost effectiveness factor are required before the proven expendable methods are abandoned.

6. New satellites should be modularized even if in orbit servicing is not contemplated so that future requirements for servicing could be introduced at a minimum of cost.

REFERENCES

1. Statement of Work.

2. Integrated Orbital Servicing Study for Low Cost Payload Programs, Final Presentation, August 1975 - For Marshall SFC by Martin Marietta.

3. Memorandum P.A. McIntyre dated September 22, 1975.

4. Canadian Satellite Bar Chart - published by P.A. McIntyre October 16, 1975.

5. Integrated Orbital Servicing & Payloads Study - Final Review, August, 1975 - COMSAT Labs.

6. Design of an Astronaut Controlled Module Exchange Mechanism - H.N. Weyman, Spar Aerospace Products Ltd.

8.4 Potential Users Viewpoints on Geosynchronous Servicing

The following information regarding the feasibility and economic practicality of geosynchronous servicing was obtained from study reports issued on the subject and also on the discussions held with managers of studies conducted for NASA and DOD by leading U.S. aerospace organizations.

The latter are felt to be a particularly valuable source of information as they represent a relatively unbiased viewpoint, and are not controlled to the extent that study reports are, by externally specified ground rules and assumptions.

Information presented below has been classified by source (by organization, and whether from a report or a discussion).

COMSAT Corporation - Dr. G. Gordon

Report - study prepared for NASA MSFC concludes that servicing even at geosynchronous orbit is economical.

Discussion - COMSAT are not pursuing servicing studies following the completion of the above study for NASA.

Martin Marietta

Report - study prepared for NASA MSFC concludes that servicing is economical even at geosynchronous orbit.

Discussion - expect to get further contracts from NASA MSFC to further study spacecraft servicing.

HAC - C. Richard Jones

Discussion - feel that geosynchronous servicing is "a long way off".

- Indicate that assumptions and ground rules used in servicing studies dictate the results and conclusions of the studies.

- Feel that spacecraft costs used in servicing studies (by COMSAT and Martin Marietta) were too high by a factor of 3 to 4, hence servicing cost benefits are exaggerated.

TRW - A. Fiul and J. Taber.

Discussion - feel results of geosynchronous servicing studies are questionable.

- Results have complete dependancy on assumptions regarding fleet size, reliability, spacecraft costs and servicerweight.

- Capability to adequately break and make an RF length (required in order to service spacecraft transponder) is questionable.

- Servicing is capable of being carried out by the IUS.

- Greatest advantage of servicing (due to the relatively high reliability of geosynchronous communications spacecraft) is to update the technology of the spacecraft.

- Servicing of the GSFC MMS is not feasible at synchronous orbit.

Aerospace Corporation - R. Wolfe

Discussion - existing study results are questionable.

- Results of the studies are very sensitive to the servicer weight assumed, i.e., the higher the servicer, the greater are the cost benefits of in-orbit servicing.

- Existing servicer designs used in the studies are not optimum (even for low earth orbit).

The general conclusion emerging from the discussions held with the above indicated that geosynchronous servicing will not materialize until at least the late 1980's. This is in part due to the need for servicing demonstrations to be carred out (even if only in low earth orbit) together with assurance from NASA regarding reasonable cost and availability of services plus appropriate orbit transfer stages (e.g., Tug), before programme planning will commit to a serviceable spacecraft approach. This leaves another 3 to 5 years before implementation occurs.

9.0 BIBLIOGRAPHY OF STS REPORTS

9.1 STS Payload Model and Economic Analysis

9.1.1 "Outside Users Payload Model"

Battelle Columbus Labs. August, 1975.

Updated outside users (non-NASA/non-DOD) mission model (from that contained in the 1973 NASA Payload Model).

9.1.2 "572 Flight Traffic Model"

NASA, October, 1974.

Essentially an update of the 1973 Mission Model.

9.1.3 "The October, 1973 NASA Mission Model Analysis and Economic Assessment"

NASA MSFC, January, 1974.

NASA TM-X-64798.

Objective was to finalize the economic assessment of the Shuttle based on the payload requirements identified by the NASA Program Offices and the DOD.

9.1.4 "The 1973 NASA Payload Model"

NASA, October, 1973.

Represents baseline set of future payloads for use as a reference base for planning purposes. Descriptions given of payload mission goals, payload characteristics and destination.

9.1.5 "Space Shuttle/Payload Interface Analysis (Study 2.4) Volume 2: Space Shuttle Traffic Analysis"

Aerospace Corporation, August, 1973.

NASA-CR-136150.

9.1.6 "Integrated Operations/Payloads/Fleet Analysis, Final Report" (Six Volumes)

Aerospace Corporation, August, 1971.

Contract NASW-2129.

Represents the primary data source for Mathematica Incorporated's economic analysis of the Space Shuttle Program.

9.1.7 "Economic Analysis of the New Space Transportation System"

Mathematica Incorporated, May, 1971.

NASA-CR-143705.

9.1.8 "Mission and Economics of Space Shuttle"

NASA, September, 1970.

NASA-HQ-MH70-70769-15-70.

Describes the goals of the U.S. Space Program and the Shuttle's role in economically fulfilling these goals.

9.2 Space Shuttle System, General

9.2.1 "Space Shuttle"

NASA JSC, February, 1975.

Extremely useful handbook describing the Space Shuttle system.

9.2.2 "User Community Development for the Space Transportation System/Spacelab"

Standford Research Institute, October, 1974.

Contract NAS8-30533.

Identifies the steps that must be taken by NASA to ensure maximum use of the STS by cost reimbursable payloads.

9.2.3 "Shuttle User Analysis (Study 2.2) Final Report Volume 3: Business Risk and Value Operation in Space (BRAVO)"

Aerospace Corporation, September, 1974.

Contract NASW-2757.

Addresses:

- Whether a space or terrestial system is better for a particular application.
- Which of two more space systems is better for a particular application?

9.2.4 "Advance Space Program Studies - Overall Executive Summary"

Aerospace Corporation, September, 1974.

Contract NASW-2575 (NASA-CR-14168).

Summary of work performed under three separate Aerospace Corporation studies for NASA - Operations

Analysis, Study 2.1; Shuttle User Analysis, Study 2.2; Systems Cost/Performance Analysis Study 2.3.

9.2.5 "An Approach to Developing the Market for Space Shuttle Payloads" (Business/Public Policy Issues and International Marketing Considerations)"

Arthur D. Little, August, 1974.

Contract NAS8-30739 (NASA-CR-120420).

Assesses the business and public policy issues that will be important for NASA to consider in the design of a programme for stimulating uses and interesting potential users of the STS.

9.2.6 "Space Shuttle Transportation System Handbook"

Rockwell International, June, 1974.

P.R. Material on STS.

9.2.7 "Space Shuttle - Program Overview"

NASA, June, 1974.

NASA TM-X-70412.

9.2.8 "Space Shuttle Transportation Techniques for User Use Development"

Battelle Columbus Labs, June, 1974.

NASA-CR-120259.

9.2.9 "Space Shuttle, Space Tug, ASTP-1974 Status Report"

U.S. Subcommittee on Manned Space Flight, February, 1974.

9.2.10 "Space Shuttle/The New Baseline"

NASA, January, 1974.

Astronautics and Aeronautics.

Describes the baseline Shuttle system as it existed in that point in time.

9.2.11 "Department of Defence Role in the Space Shuttle"

SAMSO, 1974.

AIAA A74-16121.

Breif review of DOD role in Space Shuttle.

9.2.12 "Payload Design Requirements Analysis, (Study 2.2) Final Report"

Aerospace Corporation, October, 1973.

Contract NASW-2472 (NASA-CR-140585).

Study conducted to provide data on ways to effectively realize the projected cost predictions for payloads to be developed and operated in the Shuttle era. It emphasized the economic trade-off data and identified payload parameters influencing low-cost approaches.

9.2.13 "Operations Analysis Study 2.6"

Aerospace Corporation, September, 1973.

NASA-CR-136946.

9.2.14 "Proceedings of the Second Conference on Payload Interfaces"

McDonnell-Douglas Astronautics Company, September, 1973.

MDC G4818.

9.2.15 "DOD/NASA System Impact Analysis (Study 2.1)"

Aerospace Corporation, September, 1973.

NASA-CR-135764.

9.2.16 "Space Shuttle Mission Baseline Reference Missions Volume 1 - Mission 1"

NASA JSC, April, 1973.

JSC internal note No. 73-FM-47.

Describes in considerable detail a geosynchronous round trip mission using the Shuttle and Tug.

9.3 IUS and Space Tug

9.3.1 "Utility of STS to Space Communications Community Executive Summary and Final Report"

Hughes Aircraft Corporation, October, 1975.

Contract NAS-8-31435 (HAC Report No. D5221).

An extremely interesting concept for cost competitively transferring payloads from Shuttle to geosynchronous orbit. Concept described in Section 3.3.

9.3.2 "STS Spin-Stabilized Upper Stage Study (Study 2.6)"

Aerospace Corporation, September, 1975.

(ATR-75 (7367-01) - Volume 2)

A parallel study to the one performed by HAC described above.

9.3.3 "Which Way to Shuttle Upper Stages"

Astronautics and Aeronautics, July/August, 1975.

Informative treatise of basic sizing of Shuttle upper stages.

9.3.4 "Tug Operations and Payload Support Study"

Rockwell International, February, 1973.

Contract NAS8-28876.

The objectives of this study were to define the best Tug flight operational modes, define the best relationship between the Space Tug and automated payloads during flight operations, and to assess the impacts of flight operations and payload Tug interfaces on the Tug design and programme.

9.3.5 "Tug Fleet and Ground Operations, Schedules and Controls"

Martin Marietta, February, 1975.

NASA-CR-120644.

9.3.6 "Expendible Solid Rocket Motor Upper Stages for the Space Shuttle"

NASA JSC, October, 1974.

AIAA paper No. 74-1091.

Concept feasibility assessment of Shuttle upper stages.

9.3.7 "Satcom Orbiting from Shuttle Studied"

Aviation Week and Space Technology, October, 1974.

Cost competitive system for transferring high capacity communications satellites from Shuttle to geosynchronous orbit using a low thrust liquid fueled propulsive stage.

9.3.8 "Payload Utilization of Tug"

McDonnell-Douglas, June, 1974.

Analyzes prospect for flying four different satellites (two communications and two earth observation) individually, at geosynchronous orbit using the Tug/Shuttle combination.

9.3.9 "Summary of Space Tug Programme"

NASA MSFC, June, 1974.

Description of the current Space Tug concept.

9.3.10 "Performance Analysis of a Solar Electric Tug"

Southampton University, U.K., October/November, 1973.

AIAA Paper No. 73-1070.

Adaptive computer programme developed to assess the ability of a reusable solar electric propulsion system to transfer satellites to geosynchronous orbit or return them to Shuttle orbit.

9.3.11 "SEP Stage for Earth Orbital Missions"

Rockwell International/NASA MSFC, October/November 1973.

AIAA Paper No. 73-1123.

Solar electric propulsion stage examined for geosynchronous payload delivery/retrieval mission.

9.3.12 "Space Tug Point Design Study"

NAR Corporation, March, 1972.

NASA-CR-120109.

9.4 Spacecraft Servicing

9.4.1 "Modular Spacecraft Servicing Demonstration Test"

Rockwell International, September, 1975.

EASCON '75 - Technology for Change Conference.

Description of full scale tests at Rockwell International, Downey, of an engineering model of the GSFC MMS servicing with SPMS and utilizing mock-up of the Space Shuttle Orbiter.

9.4.2 "Design of an Astronaut Controlled Module Exchange Mechanism"

Spar Aerospace, September, 1975.

EASCON '75 - Technology for Change Conference.

Description of the Spar SPMS.

9.4.3 "Cost Benefits of Spacecraft Modularity and On-orbit Shuttle Serviceability"

Aerospace Corporation, September, 1975.

EASCON '75 - Technology for Change Conference.

Design and cost comparisons made between modular EOS satellites built-up using: (1) standard modules; (2) modules designed to requirements, for five satellite projects. Servicing modes compared and costed.

9.4.4 "Scientific Uses for the Modular Spacecraft"

Grumman Aerospace Corporation, September, 1975.

EASCON '75 - Technology for Change Conference.

Description of the MMS, its flexibility, the parametric options that are available to the scientific user and also how to use the MMS to maximize economic and operational benefits.

9.4.5 "Integrated Orbital Servicing Study for Low Cost Payload Programmes"

Martin Marietta, August, 1975.

Contract NAS8-30820.

Objective of study was to provide basis for selection of cost-effective orbital maintenance system supported by the STS. This and the parallel COMSAT report represent the most recent (and useful) evaluations of general spacecraft servicing.

9.4.6 "Integrated Orbital Servicing and Payload Study Final Review"

Communications Satellite Corporation, August, 1975.

Contract NAS8-30849.

Parallel study to that performed by Martin Marietta (see 9.4.5). COMSAT's emphasis, however, was on the user's point of view, the user's emphasis on low cost, and the effect of servicing on the satellite system performance.

9.4.7 "Final Report - Servicing of the DSCS-II With the STS"

TRW, March, 1975.

Contract F047071-74-C-0330.

Classified report prepared by TRW for SAMSO on geosynchronous in-orbit servicing of the DSCS-II.

9.4.8 "In-orbit Servicing"

NASA GSFC/Rockwell International, February, 1975.

Astronautics and Aeronautics.

Description of the concept of in-orbit servicing with reference to the GSFC MMS, and the SPMS used for module exchange.

9.4.9 "Operations Analysis (Study 2.1) Final Report"

Aerospace Corporation, February, 1975.

Contract NASW-2575.

Assesses the benefits of automatic space servicing concepts as related to improvements in payload procurement and Shuttle utilization and also attempts to understand Shuttle upper stage software development and recurring costs relative to total programme projections.

9.4.10 "Manned Systems Utilization Analysis (Study 2.1) Space Servicing Pilot Programme Study"

Aerospace Corporation, January, 1975.

Contract NASW-2727 (ATR-75 (7361) -1).

Provides the background for developing an overall plan for a space servicing pilot programme as the first step of an evolutionary process to achieve operational capability when the full capability Tug becomes operational.

9.4.11 "Space Servicing Technology Programme"

Aerospace Corporation, December, 1974.

Contract NASW-2727.

Provides programme plan and background data for a space servicing flight test programme.

9.4.12 "Earth Observatory Satellite System Definition Study (EOS) - Final Report" (Seven Volumes)

TRW, December, 1974.

Contract NAS5-20519.

Reviews work on the modular EOS concept generated by GSFC, i.e., MMS. Recommends improvements and varifies concepts. One of the three studies

awarded by NASA GSFC to study their EOS MMS concept (see Grumman and GE reports below).

9.4.13 "EOS System Definition Study Reports, No. 1-7"

Grumman Aerospace Corporation, September/October, 1974.

9.4.14 "Earth Observatory Satellite System Definition Study" (Seven Volumes)

General Electric, October, 1974.

Contract NAS5-20518.

9.4.15 "In-Space Servicing of a DSP Satellite, Volume 2, Technical Report"

TRW Systems Group, March, 1974.

Report No. TR74-168, Volume 2.

9.4.16 "Design Definition Studies of Special Purpose Manipulator System for Earth Observatory Satellites, Phase 2 Preliminary Report"

Spar Aerospace and DSMA, January, 1974.

9.4.17 "Unmanned Orbital Platform Definition Study (UOPD)"

Rockwell International, September, 1973.

SD73-SA-0122.

9.4.18 "EOS Requirements for Early Shuttle Flights"

NASA GSFC, May, 1973.

9.4.19 "Shuttle Free Flying Teleopertor - System Experiment Definition"

Bell Aerospace, June, 1972.

Contract NAS8-27895.

Provides NASA with detailed information needed to continue development of the FFTO and integrate it into the Space Shuttle programme.

9.4.20 "Teleoperator Technology and System Development"

Bell Aerospace, April, 1972.

Contract NAS8-27021.

Evaluates performance of general purpose anthropomorphic manipulator with various controllers and display arrangements.

10.0 RECOMMENDATIONS FOR FURTHER STUDIES

The following (in order of priority) are recommended as studies that should be undertaken in the near future to further assess the impact of the STS of future Canadian space programmes. Most of these are indepth studies of tasks that could only be touched on briefly during the course of the present study.

No mention has been made of studies to further investigate the role and impact of servicing on space programmes, as it is felt that this would more profitably be left until the STS is operational.

10.1 Continuation of Present Study

As was evident during the present study, the STS scene is a rapidly changing one, and will continue to be so particularly in the next few years. Numerous policy decisions are in the process of being formulated, especially those regarding:

- Launch Vehicle (Shuttle and Conventional) cost and availability.
- Shuttle upper stages.
- NASA's (or other) Modular Spacecraft.

Hence, it would appear highly desirabel to maintain some degree of surveillance of STS developments, particularly as they might affect future Canadian space programmes, and hence current planning activity for these programmes.

A lower level of effort than that employed on the present study is recommended.

10.2 General Purpose Bus (GPB) (With UHF Payload) Design Modifications Required For Delta 3914 and Shuttle Compatability

A conclusion drawn from the present study is that payloads scheduled for launch during the early

part of the Shuttle era (1980 to 1985) should be compatable for launch on both an existing launch vehicle as well as the Shuttle.

This approach has the advantage that programme schedules will not be affected by either early phase-out of the conventional launch vehicle or by STS unavailability through design/development problems. (Schedule will obviously be affected if both events occur.)

The weight and the cost penalty associated with the spacecraft design having compatability with both launch systems should not be too significant.

The task is hence to determine the design modifications required to render the GPB (see SPAR-R.677 "Feasibility Study of a General Purpose Spacecraft Bus") compatable with a Shuttle launch and to determine the weight and cost penalties associated with the modifications required. Note: in order to maintain Delta 3914 compatability, most of the additional structure weight for Shuttle launch would have to be in the form of an adaptor used for supporting the spacecraft in the Shuttle payload bay.

10.3 GPB (With UHF Payload) Designed Solely For Shuttle Launch

With the significant advantages (particularly cost) to be gained from an STS launch, it would appear desirable to further increase the launch cost savings by optimizing the spacecraft design, (i.e., weight) for Shuttle compatability. Hence, the task identified here is to generate a general purpose bus design (meeting the original GPB requirements specified by DOC) that is optimized for STS launch to geosynchronous orbit.

10.4 Indepth Study to Evaluate the Capability of the GSFC MMS to Support a DOC (UHF Payload) Space Programme

The study would encompass:

- An investigation of the capability of the NASA GSFC Multi Mission Spacecraft (MMS) to support a geosynchronous communications mission - specifically one with a DOC UHF payload.

- Determination of the most cost effective complement of standard (baseline) MMS components.

- Determination of the modifications required to the MMS to most cost effectively support a UHF mission.

- Determination of the cost of the baseline MMS plus the cost of the modifications.

10.5 Indepth Study of the Economics of a Modular GPB Design

Indications from studies carried out in the U.S. are that considerable cost savings can be realized through extensive modularization of a spacecraft design.

It needs to be determined whether the quantity and type of spacecraft associated with projected Canadian space programmes will lead to similar (or any) cost savings through modularization.

Tasks associated with this study:

- Obtain Canadian payload model.

- Determine modularization possible.

- Determine cost benefits of modularization (unique versus modular costs).

10.6 Shuttle to Geosynchronous Orbit Transfer Stage Evaluation

A study is required to determine the impact of the various concepts for payload transfer from Shuttle orbit to geosynchronous orbit, on the payload design.

10.7 International Launch Vehicle Developments

The cost and availability of Japanese, French or Russian launch vehicles may make them very competitive with STS and with any available U.S. launch vehicles during the Shuttle era. The planning of future Canadian space programmes can only consider these options if sufficient information exists on their cost and availability.

Note: Items 10.6 and 10.7 would only be required as separate studies in the event that item 10.1 was not performed.

A REVIEW OF THE SPACE SHUTTLE STATE-OF-OF-THE-ART AND ITS EFFECT ON OPERATIONAL AND...

DATE DUE
DATE DE RETOUR
