#10

SPAR-R.669

REPORT ON TECHNOLOGY SURVEY OF SOLAR ARRAY ORIENTATION AND POWER TRANSFER MECHANISMS

SPAR

SPAR-R.669

REPORT ON TECHNOLOGY SURVEY OF SOLAR ARRAY ORIENTATION AND POWER TRANSFER MECHANISMS

Prepared for:

The Department of Communications
Ottawa, Canada

Under Contract No. PL36100-4-2012,
S/N OPL4-0179, with

The Department of Supply & Services
Electrical & Electronics Branch
Ottawa, Canada

30 April, 1975

SPAR aerospace products ltd.
825 Caledonia Rd.
Toronto, Ontario. M6B 3X8
Canada.

SPAR-R.669 **ISSUE** A

②

REPORT ON TECHNOLOGY SURVEY OF SOLAR ARRAY AND POWER TRANSFER MECHANISMS

PREPARED BY ①
E. Groskopfs
Senior Mechanical Engineer

APPROVED BY
S.S. Sachdev
Systems Engineer

APPROVED BY
E.R. Grimshaw
Director, Engineering
Programs

APPROVED BY Howard S Kerr
H.S. Kerr
Technical Director

REASON FOR REISSUE

Date: 30 April, 1975

AMENDMENTS

NUMBER	REASON FOR AMENDMENT	SIGNATURE	DATE

SPAR FORM 2249A 7/CHR/02

SPAR aerospace products ltd.
825 Caledonia Rd.
Toronto 395, Ontario
Canada

Telephone – (416) 781-1571 Telex – 02 2054 Sparcal Tor TWX – 610-491-1503 Cable – Sparcal Tor

DD 4639812
DL 4639835

In the course of this program and in the preparation of this report, extensive use has been made of confidential vendor's background data and material. In order to protect surveyed companies' commerical position, it is respectfully requested that the Government of Canada take this into consideration in dissemination of this report.

ABSTRACT

A survey of available Solar Array Orientation and Power Transfer (SAOPT) mechanisms in North America and Europe, with a view to application on the Canadian Multipurpose UHF Satellite project, has been conducted.

In general, it has been found that design philosophies vary considerably with each manufacturer. These variances are mainly in the choice of drive systems and lubrication philosophy.

A general recommendation regarding the choice of a drive system and lubrication philosophy has been made for the Multipurpose UHF satellite.

TABLE OF CONTENTS

7/CHR/04

TABLE OF CONTENTS (Cont'd) Page

7/CHR/05

LIST OF FIGURES

LIST OF FIGURES - (Cont'd)

1.0 INTRODUCTION

The next generation of geo-synchronous orbit Communications Satellite being considered by the Canadian Government will be 3-axis stabilized and will employ deployable solar arrays. The prime satellite configuration being considered will feature an earth pointing spacecraft body with sun-facing solar arrays. In order to achieve this, the solar arrays will need to be rotated with respect to the spacecraft body at a rate of one revolution per day. Power from the rotating solar arrays will need to be transferred to the stationary spacecraft body.

These requirements have resulted in the design, development and testing, by various companies in the space industry, of a unique device called, in this report, a Solar Array Orientation and Power Transfer Mechanism (SAOPT). This report describes the basic design features of such mechanisms including drive systems, power transfer and lubrication, and elaborates on a survey carried out of existing devices in North America and Europe. A matrix of parameters of the various mechanisms is presented with ratings showing the adaptability of an existing device to the presently planned Multipurpose UHF satellite requirements.

The report concludes with recommendations of a general nature regarding the choice of a design for the Multipurpose UHF satellite.

2.0 ARRAY ORIENTATION AND POWER TRANSFER SYSTEMS

2.1 General

This section of the report presents the basic design features and alternative concepts used in Solar Array Orientation and Power Transfer systems. Included are sections on drive system concepts, power transfer devices and lubrication philosophies. Each concept has its own advantages and disadvantages, and as will be shown later, design philosophies vary widely in the industry.

Also the overall arrangement of the mechanisms in a spacecraft can vary with each application. The two most commonly used arrangements are:

a) The through torque tube or shaft configuration where one mechanism drives both arrays, and

b) The split shaft configuration where each array is driven independently by a separate mechanism.

Previous studies at Spar have shown the through shaft arrangement to be the preferred one from a reliability and simplicity point of view. Other spacecraft design constraints, however, such as achieving a favourable moment of inertia ratio or minimizing solar torques may be overriding factors which could dictate the use of a split shaft configuration. This has to be determined at the spacecraft systems level.

2.2 Drive Systems

2.2.1 General

When analyzing data presented in the summary table, (Section 4.0) it can be readily seen that existing SAOPT mechanism designs vary widely. It appears that each company has its own "preferred" design approach, resulting in numerous different drive mechanisms essentially performing the same function. It is the purpose of this section to highlight the basic drive systems used in the

SAOPT mechanisms and present their advantages and disadvantages. The four basic solar array drive and tracking systems that are popular in the aerospace industry are:

a) A.C. Servo Drive
b) D.C. Brush Torquer Drive
c) D.C. Brushless Drive
d) Stepper Motor Drives

This discussion does not differentiate between the through torque tube drive mechanisms and the individual (two or more) drive systems, since all comments apply equally well in both cases.

2.2.2 A.C. Servo Drive - See Fig. 1(A)

A.C. servo motors must run at several hundred rpm for smooth controllable operation. This necessitates the use of very high reduction gear ratios to provide the required low output speed approaching 1 revolution per day. For example, early Nimbus solar array drives employed 10 stage gear reduction and an internal slip clutch, which was necessary to protect the 85,000:1 gear train against damage from torques externally applied to the solar array shaft.

Most SAOPT designers have, at one time or another, considered using this type of drive since it offers one very significant advantage; namely, the solar arrays are driven at constant predetermined speed which is controlled by a synchronous A.C. motor. Since it is impractical to gear down from say 500 rpm to 1 rev. per day because of the 720,000:1 gearing ratio, these drives usually operate at slew speed rates which are considerably faster than orbital speed. The normal mode of operation of an A.C. servo solar array drive is to permit the array to lag by some 2°. Only then the motor is started and is permitted to overrun the lag by an additional 2°. Thus the motor essentially drives the solar array 90 times per day in 4° increments.

7/CHR/10

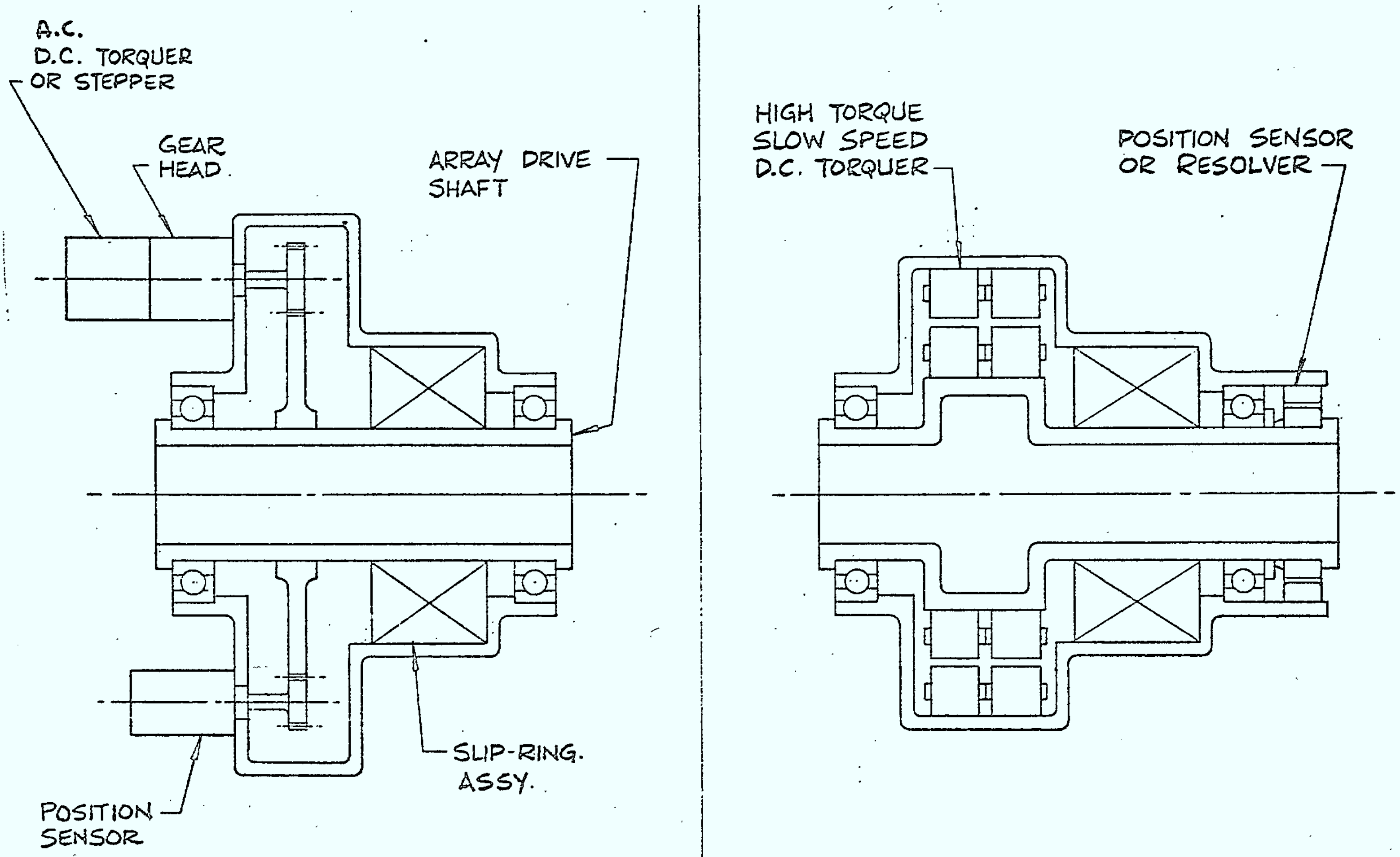

HIGH GEARING D.C. TORQUER DRIVE (A).

DIRECT DRIVE D.C. TORQUER DRIVE (B)

FIGURE 1.0

The main advantages of an A.C. servo system drive is the lack of brushes and constant speed smooth operation of the SAOPT mechanisms. On the negative side is a very high reduction ratio which involves many gears, shafts, bearings and in addition, special D.C. to A.C. inverters are necessary. Also the power requirements are generally higher than other drive systems.

2.2.3 D.C. Brush Torquer Drives

2.2.3.1 General

The direct drive torque motor is a servo actuator which can be directly attached to the load it is to drive. It converts electrical signals directly into sufficient torque to maintain desired accuracy in a positioning or speed control system. Most torque motors are frameless and require very little space, offering the greatest flexibility and adaptability in application. They are thin compared to diameter and have relatively large axial holes through the rotor for easy application to shafts, hubs and bosses. In general, torque motors are designed essentially for high torque "stand still" operation in positioning systems, and for high torque at low speeds in speed control systems.

Direct drive torque motors are particularly suited for servo systems where size, weight, power requirements and response times must be minimized and where high position and rate accuracies are desirable. Torque motors have these important advantages over other servo system actuators:

(a) High Torque-to-Inertia Ratio at the Load Shaft

A direct-drive motor provides the highest practical torque-to-inertia ratio where it counts - at the load shaft. Since it is directly coupled to the load, it has no gear train. A high ratio at the other end of a large gear train becomes sluggishly small when computed at the load shaft. A gear

7/CHR/11

train decreases the torque-to-inertia ratio by a multiple equal to the gear train ratio, resulting in a poorer acceleration capability.

(b) High Coupling Stiffness

The direct-drive torque motor is attached directly to the load itself - therefore no gears, no backlash errors. High coupling stiffness, and therefore high mechanical resonance frequency, results in high servo stiffness.

(c) Fast Response

Torque motors respond rapidly at all operating speeds because the rate at which armature current rises, and torque is developed, is accelerated by exceptionally low self inductance. Special design features, such as high level magnetic saturation of the armature core together with the use of a large number of magnetic poles, reduce the armature self inductance to very low values. The resulting high speed with which torque is developed, after voltage is applied, is an important aid to servo stiffness.

(d) High Resolution

The direct-drive use of torque motors allows them to position a shaft more precisely than with gear trains. With gearing, the backlash contributes to a "dead zone" which falls in the region of the system null point, thus reducing positional accuracy. With the direct-drive system, however, the positional accuracy is practically limited only by the error detecting transducer system.

(e) Low Speeds with High Accuracy

An example of direct-drive used in a low speed rate system is a table for testing rate and integrating gyros. This table has a speed range of 0.017 RPM to 100 RPM. Absolute instantaneous accuracy over most of this speed range is 0.1 percent.

2.2.3.2 Application in SAOPTs

DC brush torque motors are widely used in aerospace programs. These motors in addition to advantages mentioned above, are also very efficient in comparison to AC or stepper motors and may use the main spacecraft power bus without any complex electronic conversion equipment.

There are two types of SAOPT mechanisms in existence that use brush type DC torque motors. The first type of the array drive mechanism uses a small highly geared brush type DC motor which is operated like an AC servo system and is shown in Fig. 1(A). The second group of mechanisms uses relatively large diameter DC torquers (usually two side-by-side for redundant operation) driving the SAOPT output shaft directly. This approach is used on the latest Global Positioning Satellite solar array drive developed by Ball Brothers and is shown in a simplified form in the Fig. 1B. In this mechanism either torquer is driven by 30 ms DC pulses resulting in approximately 1/8 of a degree step per pulse. These steps are not very accurate since they depend on line voltage, temperature, friction, etc. However, since this drive is operated in a loop closed by a sun sensor, the step uniformity is not significant.

The main advantages of a direct drive DC brush torquer system are:

- minimum parts count in the drive, resulting in the simplest possible mechanism,
- lack of any clutches, detents, etc.,
- redundant motors can be easily and efficiently introduced.
- sun sensor alone is adequate to close the control loop,
- high reliability (motor brushes are "weakest" component in the drive mechanism),

- very low average electrical power requirements.

The following is a summary of negative comments collected during this survey:

- very low power-off holding torque which is in the 1 to 1.5 in.lb. range,
- in order to obtain high operating torque margins direct drive torquers tend to become large in diameter resulting in a considerable weight increase,
- presence of brushes, since very little "real time" flight experience of stepping DC brush torquer type solar array drive has been accumulated to date.

2.2.4 DC Brushless Drives

2.2.4.1 General

A brushless dc motor consists of a rotor position sensor, commutation circuitry, stationary armature, and a permanent magnet rotor (Fig. 1(B)). As a "black box", it is an electrical to mechanical transducer. The developed torque is directly proportional to the armature current, independent of speed.

The brushless motor represents an efficient drive component, providing a readily controlled output which can be free of any known wear-out phenomena other than the bearings themselves. One of the early models which was placed on life test in 1963 ran for six and three quarter years at 3000 rpm in a thermal vacuum until the bearings wore out.

Today, any dc motor characteristic obtainable with conventional (brush-type) commutation can be obtained with electronic (brushless commutation). Three types of electronic commutation have been developed. These are (i) Photoelectric, (ii) Hall Effect and (iii) Resolver. Of these, the last, i.e., Resolver commutation has been used for SAOPT applications. The operating principles are given below.

2.2.4.2 Full Rotation Brushless dc Torque Motor Principle of Operation - Resolver Commutation

Assume there is a two pole permanent magnet rotor in a stator with two windings phased 90° apart (Fig. 2). The windings are called the sine and cosine winding respectively. The magnetic circuit is designed so that the flux through each winding varies sinusoidally as a function of rotor position through a full rotation. This is illustrated in Fig. 2 and 3. A current is driven through each winding, also having a sinusoidal amplitude variation with shaft position in phase with the flux in the winding.

Torque is proportional to the product of flux and current. The contribution of each coil to the output torque is shown in Fig. 2. The components are $\phi i \sin^2\theta$ and $\phi i \cos^2\theta$. Adding the two components the total output torque is

$$\phi i \, (\sin^2\theta + \cos^2\theta) = \phi i$$

This can also be verified graphically.

In order to make this system operate, a method must be devised to have current through each winding vary sinusoidally with shaft position. A resolver is placed on the motor shaft with the output windings in phase with the motor windings. The output of each resolver phase is demodulated, amplified and connected to the corresponding motor winding (Fig. 3).

$$\text{Output Torque} = T_{sin} + T_{cos} = k\epsilon\phi_{max}\sin^2\theta + k\epsilon\phi_{max}\cos^2\theta = k\epsilon\phi_{max}$$

Since the flux value ϕ maximum is a design constant, output torque = $K\epsilon$ where K is the system gain and ϵ is the resolver excitation.

In all other respects the motor can be treated as a D.C. torque motor with a straight line torque speed curve.

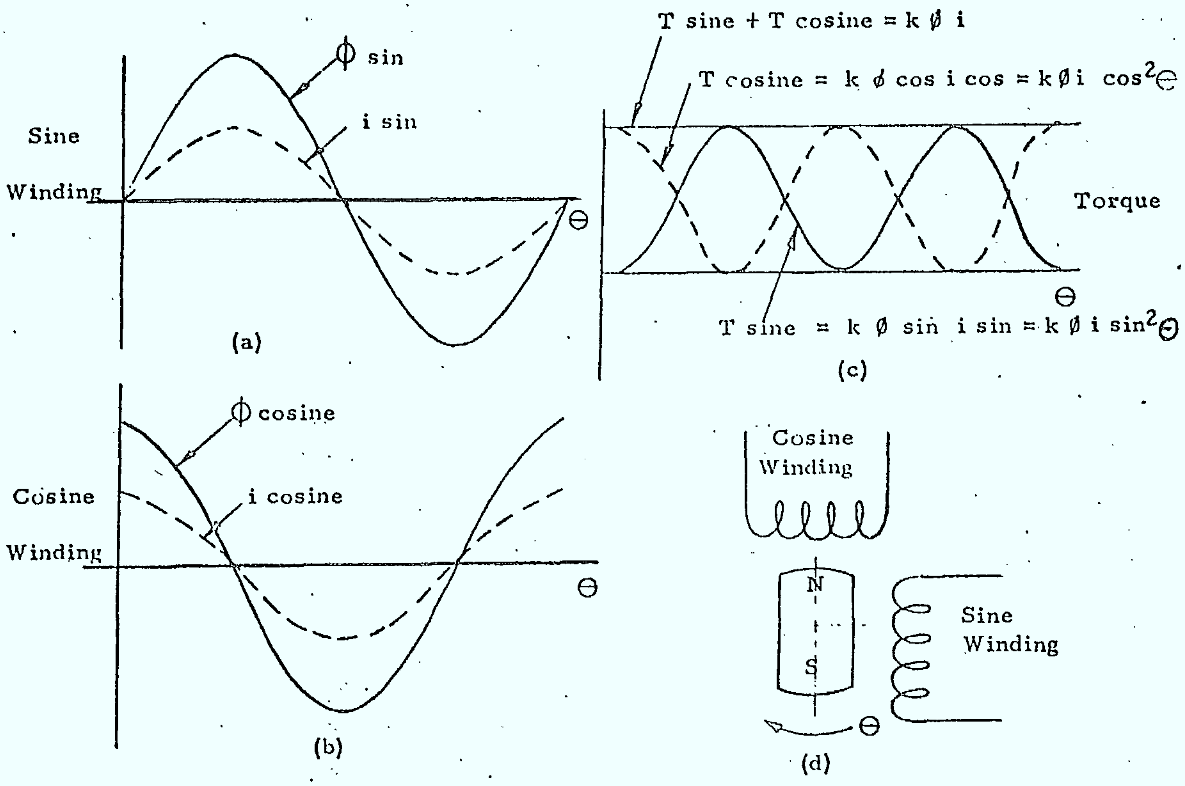

FIGURE 2.0

OPERATING PRINCIPLE - D.C. TORQUE MOTOR

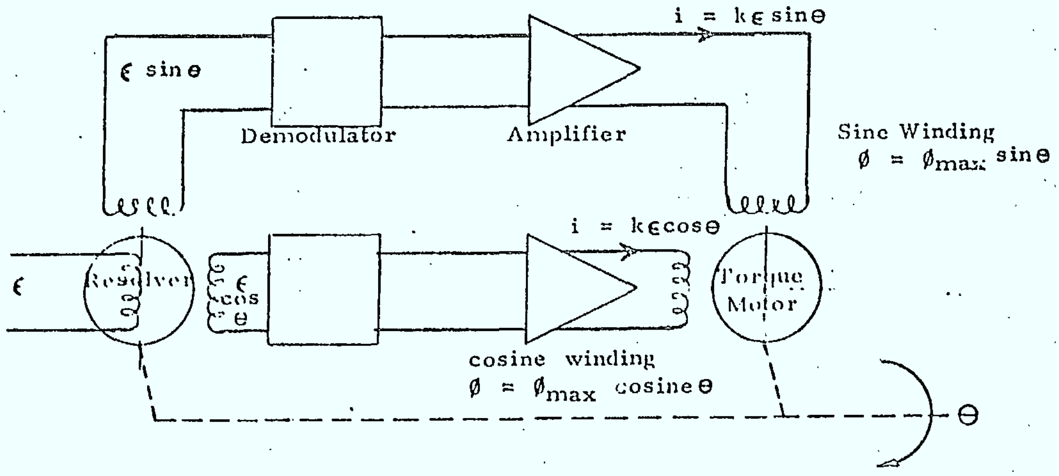

TYPICAL D.C. TORQUER/RESOLVER SCHEMATIC

FIGURE 3.0

In order to achieve full rotation, the torque motor is connected to a multiple pole brushless resolver. The resolver has the same number of poles as the torque motor.

The torque is proportional to the resolver excitation and is independent of shaft position.

The additional system complexity over a conventional position servo is the addition of the resolver and one extra channel of amplification.

2.2.4.3 Space Applications

Brushless DC drives have been successfully operated in space for periods exceeding 5 years in antenna despin mechanisms. These drives were developed mainly to eliminate DC motor brushes while retaining all advantages of conventional DC torques.

Electronic commutation techniques avoiding the problems of sliding electrical contacts in vacuum were developed and flown in the early sixties. Unfortunately, they are still not "catalogue items" by any American manufacturer. Their usage in the space program, however, has found gradual acceptance; for example, the latest ITOS weather satellite has seven of various types used in the attitude control system, tape recorders, and in radiometer scanners.

A typical motor used on recent LEM Radar Rendezvous System has the following parameters:

TFR47-1P

Torque	72 oz.in. at stall
Power	18 watts at stall
Resistance	32 ohms
No load Speed	350 RPM
Size	4 5/8 in. O.D. by 5/8 in. thick; 2 5/8 in. I.D.
Weight	.92 pounds
Operating Conditions	10^{-9} vacuum -300°F to +350°F at mounting surface

The slope of the torque speed curve may be changed by changing the resistance. Assuming a constant supply voltage, doubling the stall torque will halve the no load speed. The doubled torque would require 4 times the normal power.

The TFR47 motor has high peak torque capability (4 times normal torque) without demagnetization.

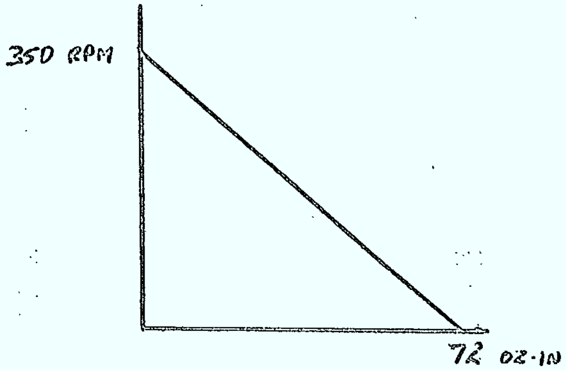

TORQUE SPEED CURVE

2.2.5 Stepper Motor Drives

2.2.5.1 General

The most common or "popular" power source to drive the solar arrays are stepper motors. This is mainly due to the positive stepping combined with infinitely variable stepping rate possible.

Driving the array in the stepping, or incremental, mode provides two distinct, life and relability-enhancing advantages to the drive. Power is applied to the motor only during the driving periods (magnetic detenting torque of the motor stabilizes the drive between array "steps"); this significantly reduces heating of drive lubricants, and thermal stresses on the drive in general, in addition to saving electrical power throughout the mission. Secondly, since actual drive operation is occurring during only a small percentage of the mission, a ten-year flight will require the equivalent of only 100 days of continuous drive operation.

Since it is impractical to drive the array directly by a stepper motor(s) because steps must be extremely small, and due to the relatively low stepper torques, it is necessary to use some gearing. This speed reduction (also torque increase) can take many forms such as:

- single gear pass as used on the CTS SAOPT. This limits the reduction ratio to 16:1 approximately. A typical drive system is shown in Figure 1(A) where motor gearhead assembly is replaced by a stepper motor.
- single pass harmonic speed reducer as shown in Figure 4. The use of the harmonic drive results in a significant reduction in complexity over conventional spur gear approaches which would require four times as many parts to achieve the same 160:1 reduction.
- Combination of spur and harmonic reducers as used on the GE drive mechanism.
- worm reduction combined with some gear reduction - see Scheaffer Magnetics drive type I (Section 3.3.2.2).

The stepper motor is an extremely simple device in itself, and its use simplifies the overall SAOPT design, as well. A high-torque stepper has a machined one-piece rotor and an encapsulated wound field structure. No detents, ratchets, pawls, cams, brushes, or commutator - all of which could cause potentially reduced reliability - are used. Stepping is accomplished through the sequencing of drive current to the four-phase winding by switching transistors and the consequent interaction of magnetic fields. The only contacting mechanical parts in the motor are the two precision ball bearings which support the rotor; the space lubrication technology for these is well-known and widely demonstrated.

7/CHR/18

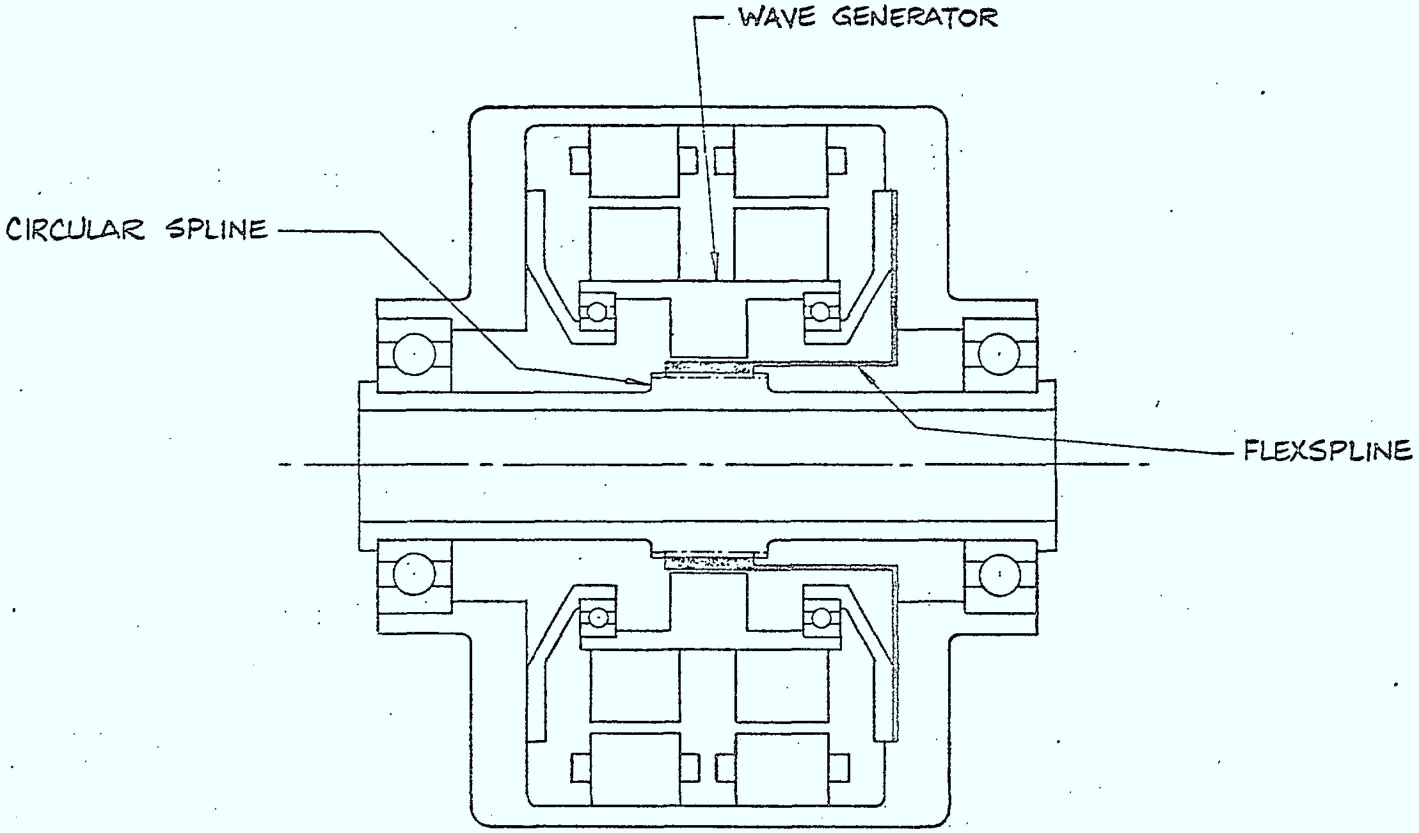

HARMONIC STEPPER DRIVE.

FIGURE 4.0

2.2.4.2 Theory of Operation

The magnetic stepping motor is an incremental device that accepts discrete input pulses and responds to these pulses by rotating its output shaft in equal angular increments. Magnetic stepping motors fall into two categories: variable reluctance motors and permanent magnet motors. The variable reluctance motor consists of three or more stator phases and a rotor of soft magnetic iron. The stator phases are wound on salient poles forming electromagnetic structures. When a stator winding is energized, the rotor will seek a path of minimum magnetic reluctance between the stator salient poles and the rotor.

The permanent magnet stepping motor consists of a stator containing phases wound on salient poles and a permanent magnet rotor. When a stator winding is energized, a magnetic flux pattern is set up which interacts with the permanent magnet rotor. The rotor will move in a manner such that the magnetic moment of the permanent magnet will align with the field set up by the stator winding current.

The cross section of a typical 1.8 degree, PM stepper is shown below. The rotor has 100 pole teeth of alternate polarity while the stator has the equivalent of 48 teeth* resulting in 200 discrete minimum air gap configurations. The stator coils are arranged in two phases, (A and B) on the odd and even stator poles. Each phase has two bifilar windings which, when energized, magnetize the stator poles as listed in the table below.

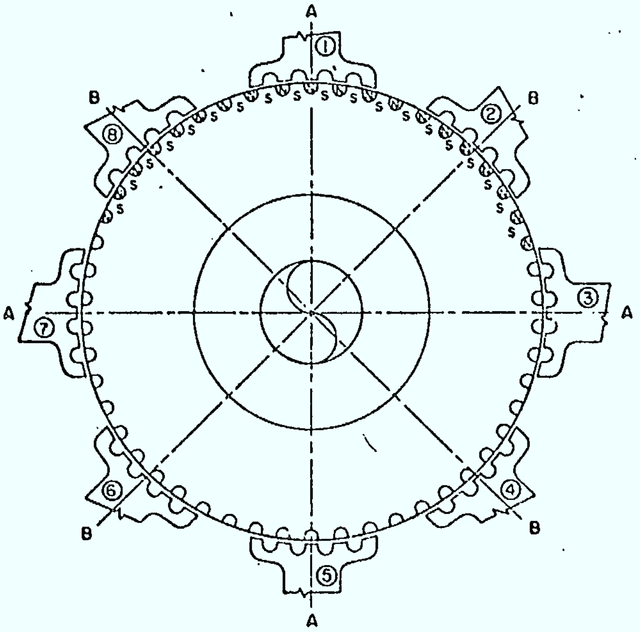

CROSS SECTION OF TWO-PHASE STEPPING MOTOR

TABLE I STATOR POLARITIES FOR VARIOUS PHASE WINDINGS

Winding	Stator Pole Number							
	1	2	3	4	5	6	7	8
A_1	N		S		N		S	
A_2	S		N		S		N	
B_1		S		N		S		N
B_2		N		S		N		S

*The rotor is split in two halves, each carrying 50 teeth, and each offset one-half tooth from the other half. Each of the eight stators is spaced the equivalent of one tooth from its neighbour, resulting in the equivalent of 48 teeth around the total stator.

2.2.6 Discussion

The advantages and disadvantages of the two main classifications that drive systems can conveniently be grouped into i.e., (i) high speed prime mover with indirect or geared drive and (ii) low speed prime mover with direct drive are discussed in some detail in Section 4.0 Conclusions and Recommendations.

As has been reviewed in the preceding subsections the AC Servo and DC stepper motor drives fall under the first category and the direct drive DC brush or brushless torques fall under the second category.

2.3 Power Transfer Systems

2.3.1 General

This section presents a state-of-the-art survey of power transfer systems and draws from a previous study conducted by Spar recently. Brush/slip ring devices are the most commonly used. The majority of slip ring assemblies used in space applications are of the viscous lubricated metal wire type. The remaining are slip rings of the composite brush type often impregnated with liquid lubricants for wear control. Other type of electrical power devices, which are discussed in this section, have only limited usefulness, and generally are not sufficiently developed to permit their use in spacecraft applications.

2.3.2 Brushes/Slip Rings

The following paragraphs will discuss in some detail various most commonly used power transfer devices that have been and are used successfully in SAOPT mechanisms.

2.3.2.1 Metal Brushes

Metallic brushes, particularly in the form of wires of gold, silver and other precious metals have been used for a number of years in both ground and space environments but depend upon the presence of a viscous lubricant to obtain adequate wear-life properties. One of the best known space applications was a device supplied by Ball Brothers Research Corporation for use in the OSO satellite. The device itself was made by Polyscientific Limited and provided 40 channels for power and telemetry. It uses rectangular section wire brushes operating in V-groove rings. During the development program the unit was tested up to 4,320 hours in vacuum down to 1×10^{-8} torr at 30 rpm. Each power ring was rated at 1 amp, although they were capable of carrying a maximum current of 2 amps.

Metal brush/ring power transfer devices have also been flown on Saturn vehicles. In this application a 140 circuit unit was developed and tested for 7,000 hours at 1 x 10^{-8} torr. After subsequent qualification the unit has given in-orbit operation in excess of 7,000 hours.

In all applications considered to date the ring/brush interface has been viscous lubricated. In-house testing by Polyscientific on various methods of dry lubricating wire-brush/ring devices have met with no real measure of success. It has been demonstrated that even with viscous lubricant the surface finish of the ring is critical to the maintenance of an adequate film. If the ring is too smooth, the lubricant does not 'wet' the surface completely, a discontinuity of the lubricant film is formed and high wear results.

Although the metal brush/metal ring configuration is completely state-of-the-art it has to be viscous lubricated to give adequate life, and even in that condition it cannot handle the high power levels that can be carried by the best of the composite brushes.

2.3.2.2 Composite Brushes

Composite brush/metal ring devices are state-of-the-art. Various composite materials have evolved from metello-graphitic materials used for brushes in aircraft motors. Many of the materials now available use Molybdenum Disulphide as a constituent to lubricate the brush/ring interface, and a metal such as copper or silver to conduct electrical engergy through the brush. Due to their development status and inherent simplicity the composite brush device is a relatively reliable, low cost device that has an acceptable power handling capability and high efficiency.

Life of these devices is almost completely dependent on the wear/life characteristic of the brush material. As the total number of revolutions of a device operating at 1 rev/day for 7 years should be about 3000 revs, the wear limitation may not be demanding. Some latitude is therefore available within a range of composite materials to optimize other parameters such as driving torque and noise.

The disadvantages of composite brush devices are its relatively high driving torque, relatively high noise levels, and the generation of wear debris that can contaminate other equipment.

The following types of composite-brushes may be considered in terms of their suitability to a 1 revolution per day solar array drive.

i) Graphite Brushes - These have a very rapid wear in the absence of moisture. Adjuvants are used to improve high altitude performance.

ii) Silver/Graphite Brushes - These have exhibited a high rate of wear in vacuum.

iii) Silver/Graphite/molybdenum Disulphide (MOS_2) Brushes - Their performance varies considerably with graphite content.

iv) Silver/Molybdenum Disulphide Brushes - These generally have good performance but brushes crumble very easily. Wear rate in air is much higher than in vacuum.

v) Silver/Copper/Molybdenum Disulphide Brushes - The addition of copper improves machinability of the brush material. There is appreciable space experience with this material.

vi) Silver/Copper/Niobium Diselinide Brushes - The good conductivity of $NBSe_2$ reduces contact resistance compared to MoS_2, but wear rate and noise are not as good.

Typical performance characteristics of these composite brush materials when operated in vacuum are shown in the following table.

Brush Material / Parameter	Silver-Graphite	Silver-Graphite-Moly-disulfide	Silver-Moly-disulfide	Silver-Moly-disulfide	Silver-Niobium Di-selinide
Compound	80% Ag 20% C_G	75% Ag 20% C_G 5% MoS_2	90% Ag 10% MoS_2	85% Ag 12.5%MoS_2 2.5%Cu	85% Ag 12.5%$NiSe_2$ 2.5%Cu
Ring Material	Electro-silver	Coin Silver	Electro-silver (Re on Ag on Au)	Electro-silver	Solid Silver
Contact Pressure (psi)	10.0	13.1	10.0 (23)	10.0	9.7
Current Density (A/sq in)	300	102	300 (600)	229	258
Surface Speed (in/min)	424	318	424 (.04)	318	1.97
Contact Resistance (mΩ)	33	-	$\leqslant 5$	9.2	10.4
Noise (mv)	13	-	$\leqslant 1$	3.5	$\leqslant 100$
Wear Rate (in/in)	5×10^{-8}	-	1×10^{-9}	9.7×10^{-10}	2.5×10^{-9}

TYPICAL PERFORMANCE CHARACTERISTICS OF COMPOSITE BRUSH MATERIALS WHEN RUN IN A HARD VACUUM

2.3.3 Flat Conductor Cable

In a recent paper entitled "Flat Conductor Cable for Limited Rotary or Linear Motion" James R. Cardin of NASA/MSFC describes a method of transferring power across a rotating interface using a length of flat conductor cable.

The advantages that are claimed for the method is that it gives very little resistive torque and therefore gives great flexibility and high reliability. Its limitation though is that it is only suitable for applications in which the amount of relative rotation is severely limited. In effect the two ends of a length of flat conductor cable are connected to the rotor and stator respectively, and the limiting number of rotations is that which can be stored within the physical confines of the device. For this application, it would require in excess of 3,500 turns of F.C.C. to be wound up at the start of the mission. Apart from the physical problem of containing that amount of material there is the added problem that even if it could be contained initially it would create impossible handling problems as it unwound. Consequently, it is concluded that as a method of transferring power across a rotating interface the flat conductor cable has such severe physical limitations as to prevent its use in an application requiring a large number of rotations. For this reason it was not considered further in this study.

2.3.4 Rolling Element Contacts - Bearing Type

Rolling element contacts represent a design concept in which an attempt is made to reduce wear and electrical noise by replacing sliding contacts with rolling contacts as shown in Figure 5.0.

In a study performed at NASA/GSFC, Devine found that the best performance was achieved with conventional ball bearings in which the races and balls were gold plated and lubricated MoS_2 picked up from a silver/MoS_2 retainer. A light application of MoS_2 was applied in a suspension at the start of the tests. By attaching leads to the inner and outer races a 10 mA signal was transmitted across the interface for a total of 115 x 10^6 revolutions.

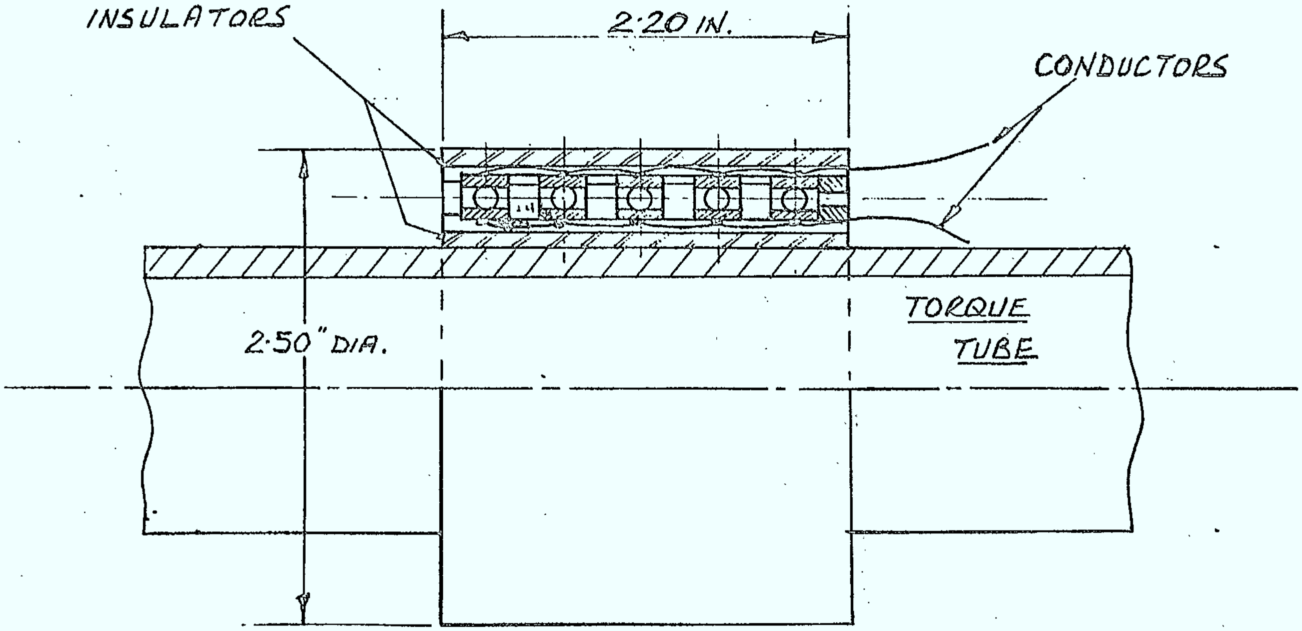

FIGURE 5.0 SHOWING BASIC DESIGN OF DEVICE USING BEARINGS TO TRANSFER POWER

The life capability demonstrated in the tests was adequate for this program but the current of 10mA is inconsistent with the 20 amp level demanded of a device for use in the contemplated solar array application. It was found that the noise increased more or less proportionally with current with a value of approximately 1 mv per amp, a level which is comparable to that obtained with other slip ring devices.

The main advantage of the device is its relatively low cost compared to all other devices. This is as a result of using readily-available, off-the-shelf type components. The most expensive feature of the unit would be the dry-lubricated bearings.

Its most severe disadvantage is the potential reliability hazard of putting additional bearings in the solar array drive assembly. Ball bearings are regarded as a potential safety hazard in many long life applications to the extent that frequently it is found desirable to provide complete redundancy for each bearing.

2.3.5 Rolling Element Contacts - Other Types

The rolling element concept, exemplified by the Fleming Device (reference "A Non-Sliding Electrical Connector", W.P. Fleming, M.I.T.), has been developed by Spar. This concept was selected by COMSAT for further development, with the specific approach to be determined by a trade-off study of four different candidates. The results of study are published in SPAR-R.405 report.

Following the Phase I analysis, at the beginning of Phase 2, four different devices using the rolling element concept were analyzed, the final selection was made, and the design optimized during the balance of the Phase. The notes presented here include information generated in Phases 1 and 2. (ref. SPAR-R.405).

i) The Fleming device considered in Phase 1 is shown in Figure 6.0. The principle of the device is that the set of inner rings, wired to the array, orbit around the inside of the outer rings, hard-wired to the spacecraft. A harmonic drive generator provides the orbitting motion. Deflection of the inner rings against the outer rings develops a large contact area to give high power handling capability and low noise.

ii) The second rolling element device considered was the Multi-Element Device shown in Figure 7.0. It consists essentially of an inner and an outer contact ring with a series of equally spaced contact rollers located between them. To meet the requirements of the specification the device would consist of a system of 4 contact ring pairs and a support structure for holding the rings in the correct relationship to one another. In order to establish a significant contact area at the interface between the rings and rollers, the rollers would be deflected like the inner ring of the Fleming device.

iii) The principle of the Rolling Belt device shown in Figure 8.0 gives potentially greater contact area than either of the devices. However, in order to realize an actual contact area equal to the apparent contact area, a method must be devised that ensures that the entire belt stays in good contact with both the inner and outer rings. A number of methods can be used to achieve this end, all of them involving the use of some type of roller - spacer assembly placed inside the flexible belt. It will be difficult to achieve uniform contact pressure over the entire belt surface, but it should be possible to significantly increase the contact area by suitable design of a roller - spacer assembly.

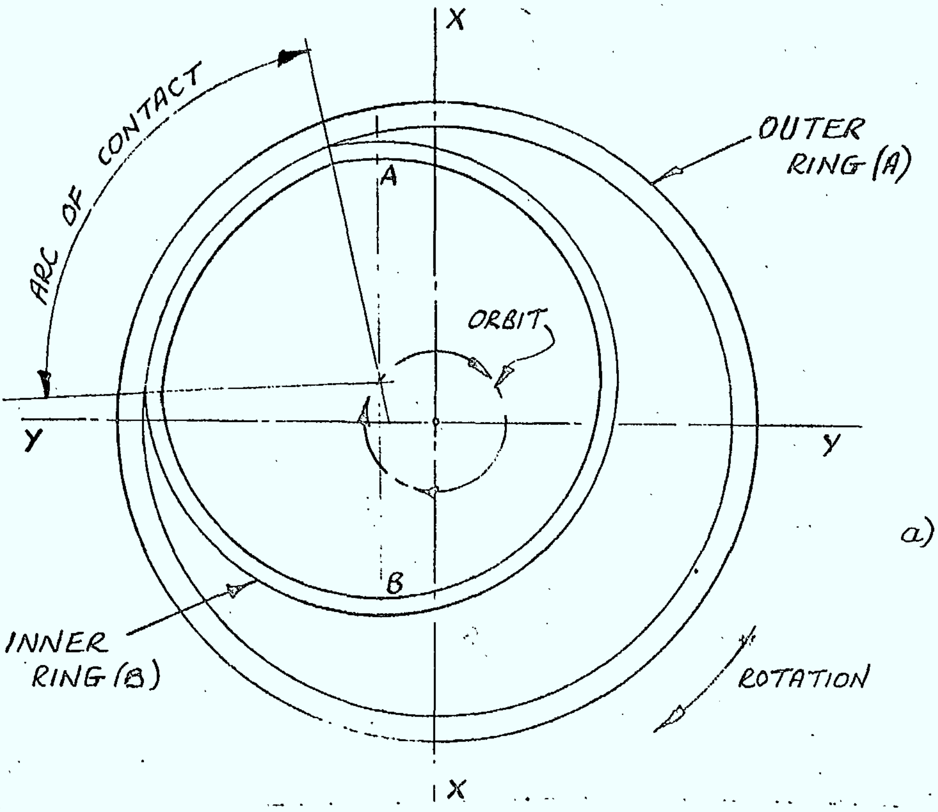

a) PRINCIPLE OF OPERATION

b) FLEMING DEVICE

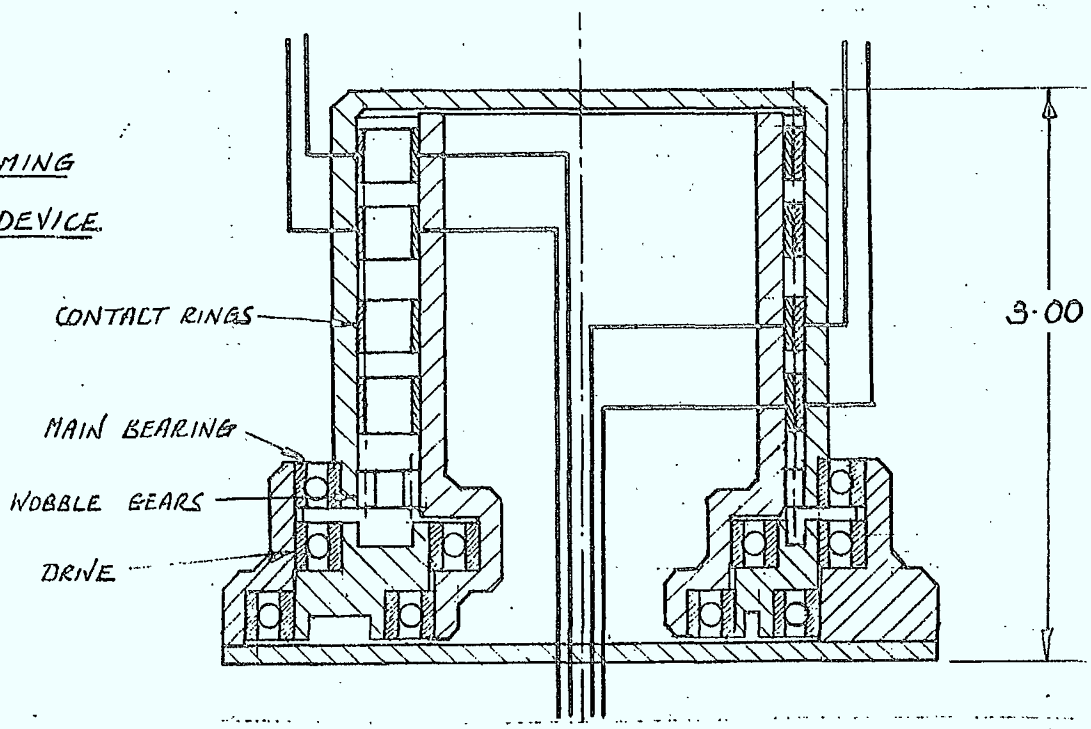

FIGURE 6.0 DIAGRAMS SHOWNING FLEMING DEVICE AND ITS PRINCIPLE OF OPERATION

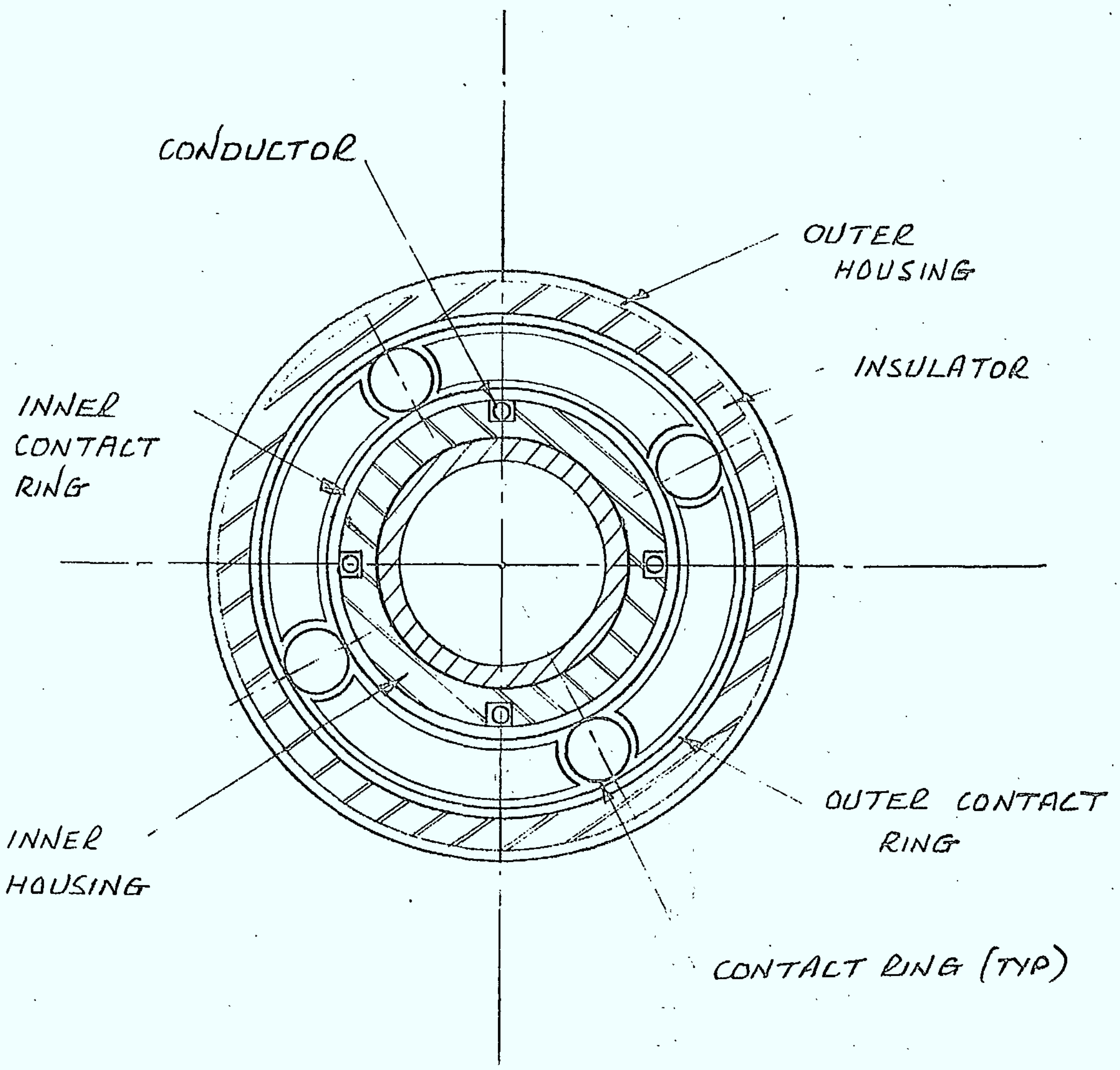

FIGURE 7.0 DIAGRAM OF MULTI-ELEMENT DEVICE

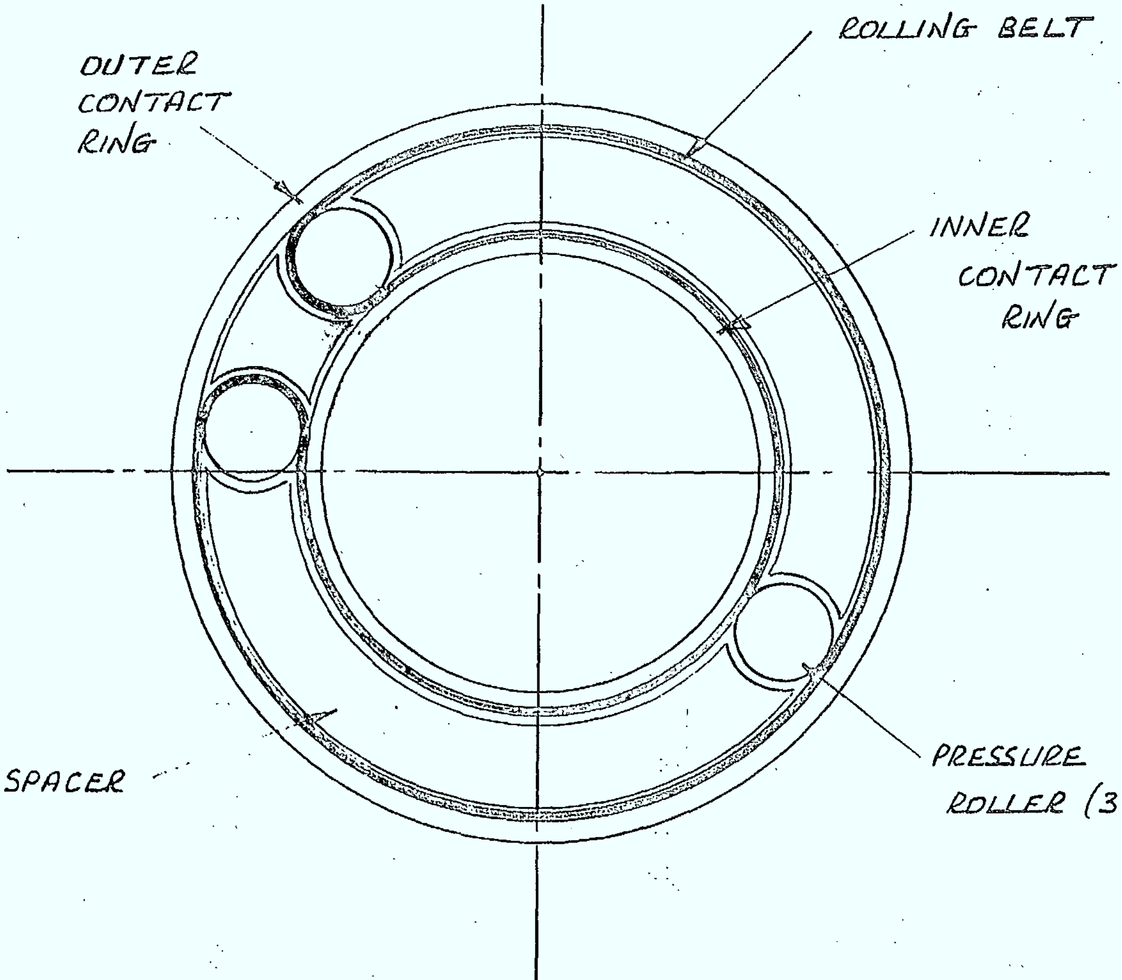

FIGURE 8.0 DIAGRAM SHOWING PRINCIPLE OF ROLLING BELT DEVICE

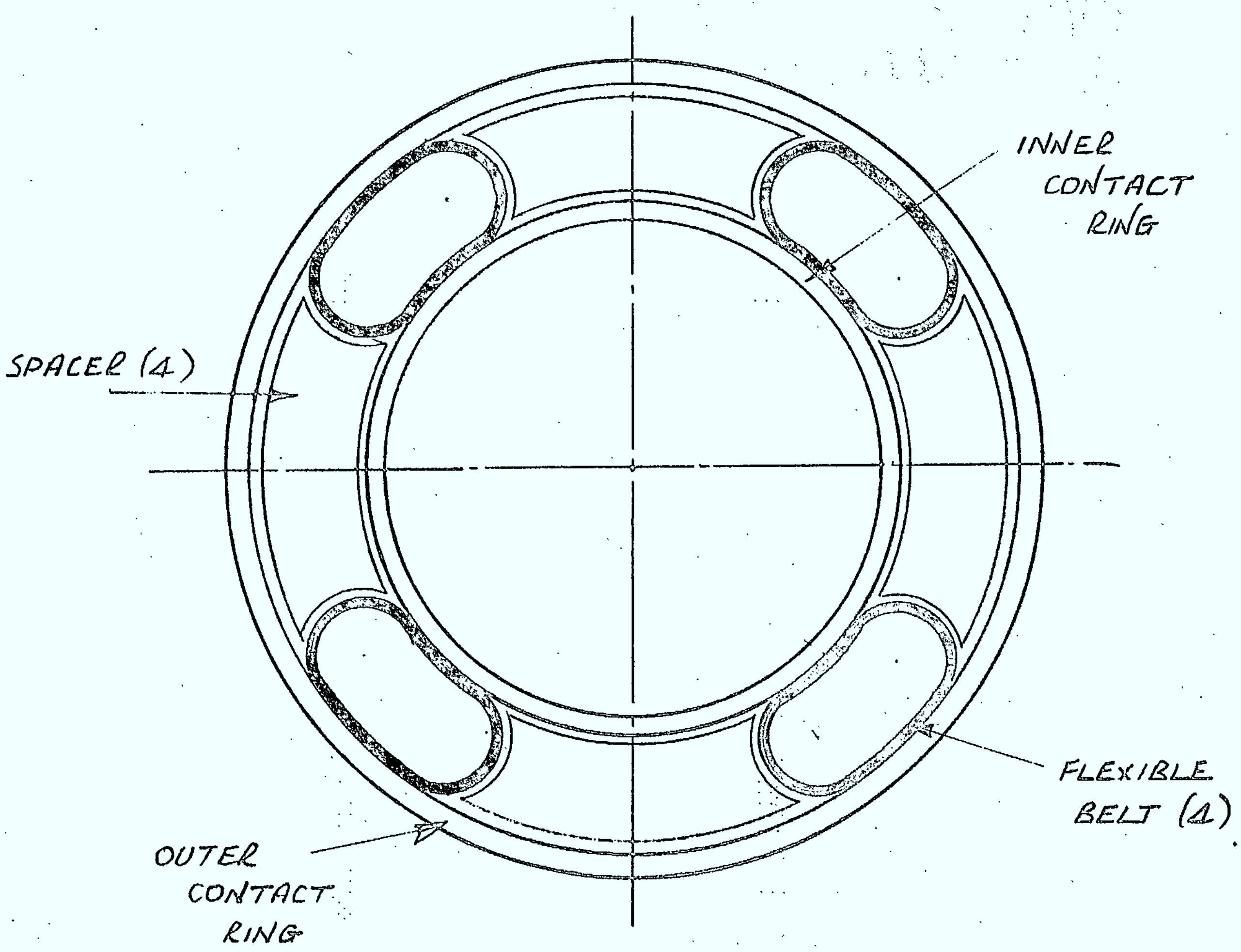

FIGURE 9.0 DIAGRAM SHOWING PRINCIPLE OF FLEXIBLE ROLLING ELEMENT DEVICE

iv) During the Phase 2 trade-offs a combination of the better features of the Rolling Belt and the Multi-Element devices was made to form the Flexible Rolling Element Device. It provides a significant increase in contact area compared to the Multi-Element Device, by deflecting a number of small belts between a pair of contact rings. Due to the geometry of the belts they do not need the auxiliary pressure rollers that are necessary in the Rolling Belt device. The original concept of the Rolling Element device is shown in Figure 9.0.

Each of these rolling element designs were considered in detail in the referenced trade-off study (SPAR-R.405). The estimated performance characteristics of each device are noted in Figure 15.0.

2.3.6 Rotary Relay

The rotary relay is a new device, one configuration of which was described in a paper entitled "Rotary Relay for Space Power Transfer" by Theron Haynie of the Boeing Company. A second configuration of the device has been designed by E. Groskopfs of Spar and has been patented in Canada and United States.

The essential feature of the rotary relay is that the rotor and stator rotate together for a fixed portion of a full rotation, then automatically, or upon command, the rotor indexes back by a predetermined amount to re-make contact with the appropriate poles of the stator. By providing more than one set of contacts so that one set operates while the others carry the power, an uninterrupted power supply can be assured.

The conceptual design of a device is given in Figure 10.0 and its performance parameters in Figure 15.0.

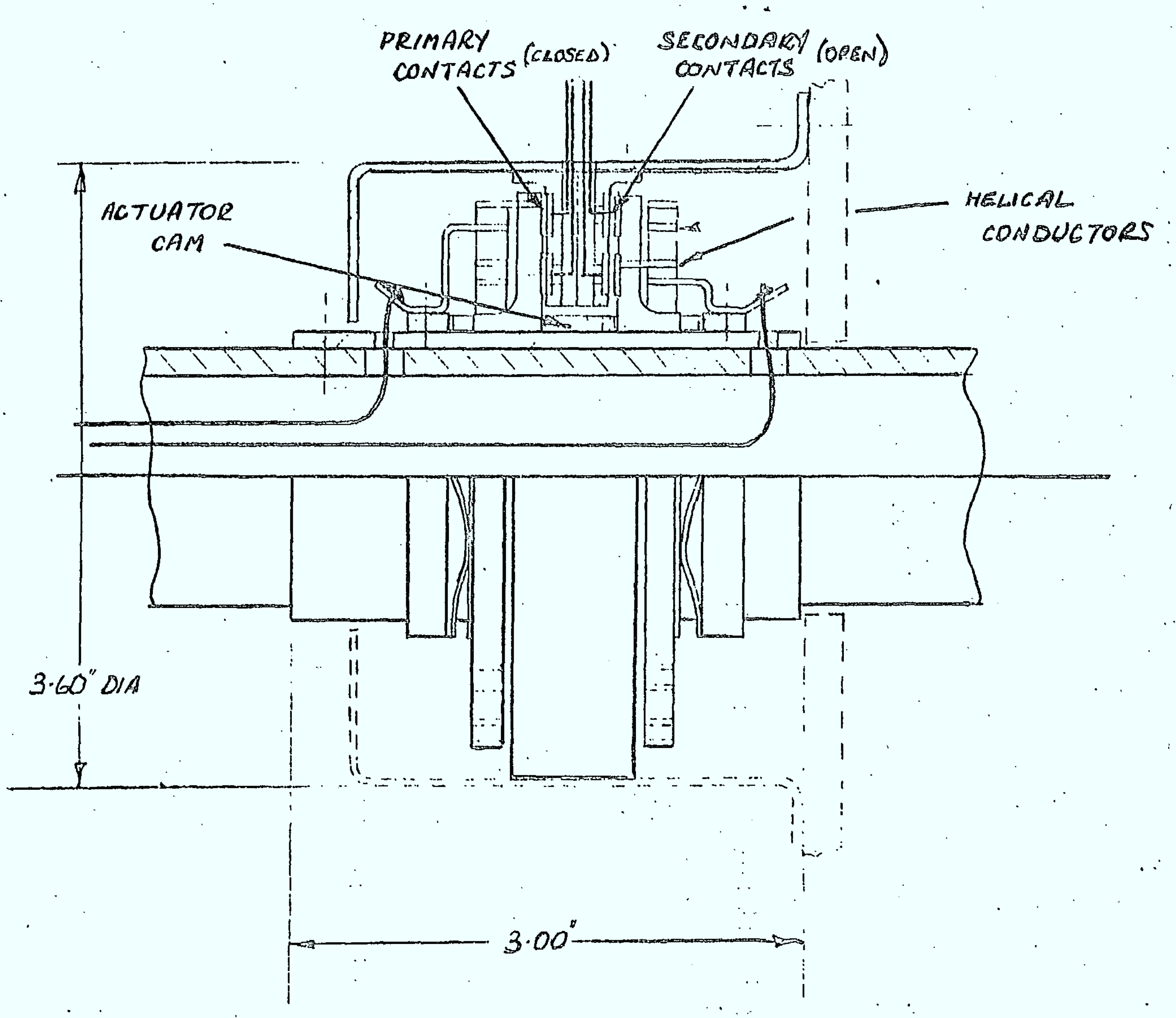

FIGURE 10.0 CONCEPTUAL DESIGN OF ROTARY RELAY DEVICE

2.3.7 Lubricant Reservoir, Liquid Metal Slip Rings

The feasibility of using a reservoir of gallium as a means of power transfer has been demonstrated quite effectively by tests performed at NASA Lewis, General Electric and Hughes. In both test programs the reservoir was formed in the side of a ring. A second contact ring, rotating about the same axis as the first, is located in the reservoir of gallium to complete the contact path. A diagram of a device using this principle is given in Figure 11.0.

Gallium has been selected as a suitable metal because it is a liquid at normal room temperature and has a sufficinetly low vapour pressure. However, careful thermal control is required to prevent freezing in orbit.

A particular advantage of using liquid metal as a conductor is that because it develops better contact interface it permits much higher contact current densities to be used. Tests have demonstrated the feasibility of making a slip ring device to carry 100 amperes at 3000 volts in a vacuum.

A significant problem with this type of device is the need to freeze the gallium during launch to prevent spillover.

The development of the device is at an early stage and is not sufficiently advanced to prevent overcome potential problems such as gallium rejection, corrosion due to gallium recondensation and others mentioned above.

2.3.8 Hard-Wired Coupling

The hard-wire coupling is described in a paper entitled "A Hard-Wire Rotating Coupling", by E.H. Wrench and L. Veillette and is the subject of a U.S. Patent #3,358,072 December 12, 1967.

This device was invented by Wrench specifically to carry power from a solar array to its parent spacecraft.

7/CHR/28

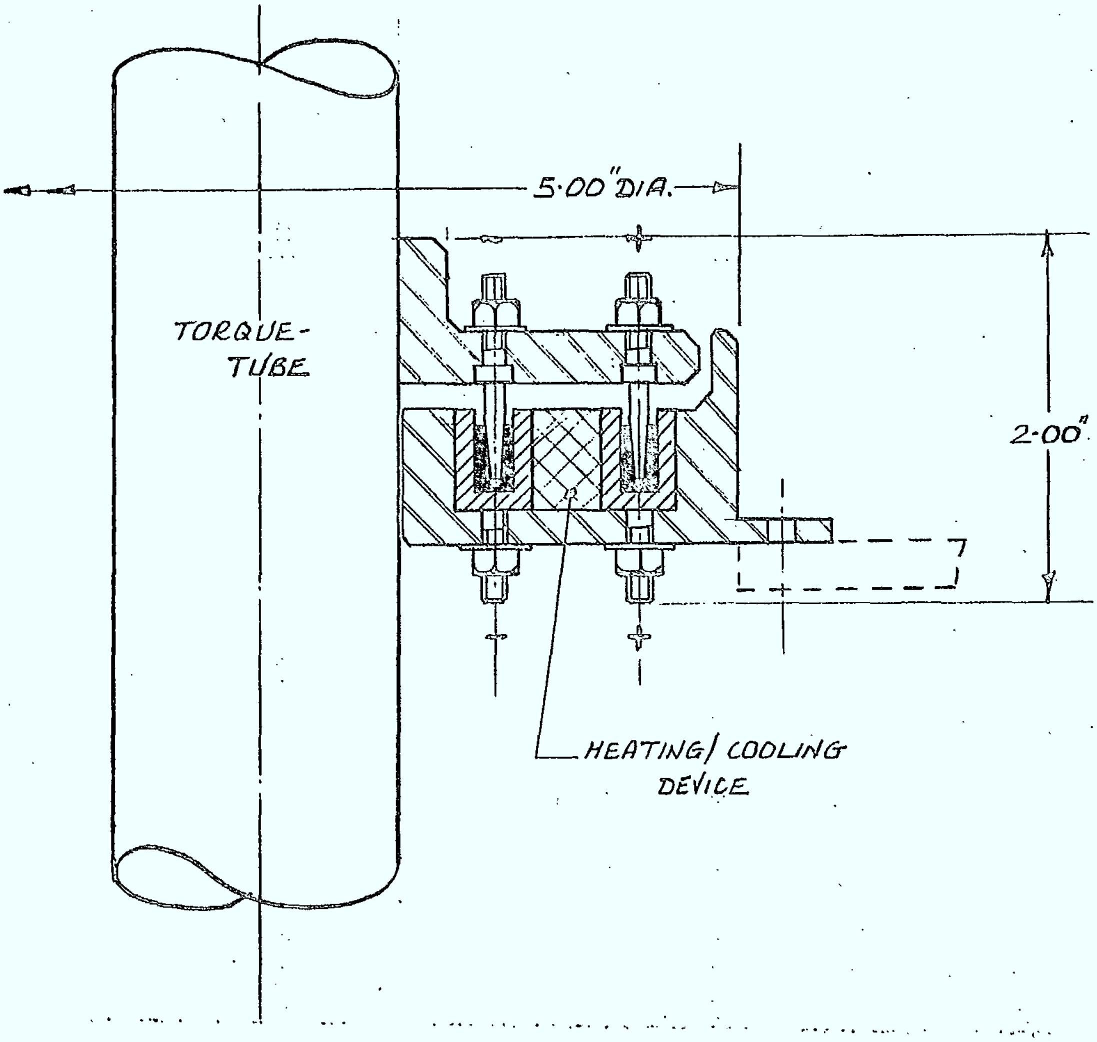

FIGURE 11.0 DIAGRAM OF GALLIUM RESERVOIR DEVICE

The principle of the device is shown in Figure 12.0(a). Consider a conductor to be passed down the centre of a flexible tube. If both ends rotate about the tube axis at the same rate, the tube can be bent through 90° or any other contour, without the conductor becoming twisted. Figure 12.0(b) gives a better example of how the device can be applied to a solar array drive. The flexible cable used in the earlier example is replaced by two tubes that are located at right angles to each other and are coupled together by a pair of bevel gears. Each tube is located in a pair of ball bearings which in turn are supported in a rigid thin-wall elbow (rotating bearing block). When the elbow is rotated relative to the spacecraft the outer tube rotates relative to the elbow. In this way the cable does not twist but undergoes of flexing process at the elbow. The application of the device to a typical solar array drive is shown in Figure 13.0. There are many disadvantages in using this device for a large array, because the array must rotate about the sun axis. This imposes restrictions on the size and geometry of the array. In the evaluation a circular array was postulated, but this is presently beyond the state-of-the-art for such large arrays.

A further disadvantage that imposes severe restrictions on the satellite design is that the arm must be stored somehow against the satellite structure during launch. This implies that some form of flexible drive is needed at the point of support and the design, weight and reliability implications of this added element must be considered in any component evaluation.

2.3.9 Rotary Transformers

The use of high power rotary transformers as a means of transferring power across a rotary joint has been considered for numerous applications in order to avoid problems such as wear, debris accumulation, lubrication, etc., that are characteristic of slip ring and modified slip ring devices. The rotary transformer provides a rather different approach to the problem in that electrical energy is transferred across a gap by means

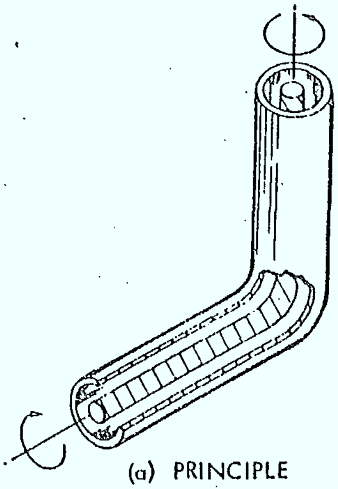

(a) PRINCIPLE

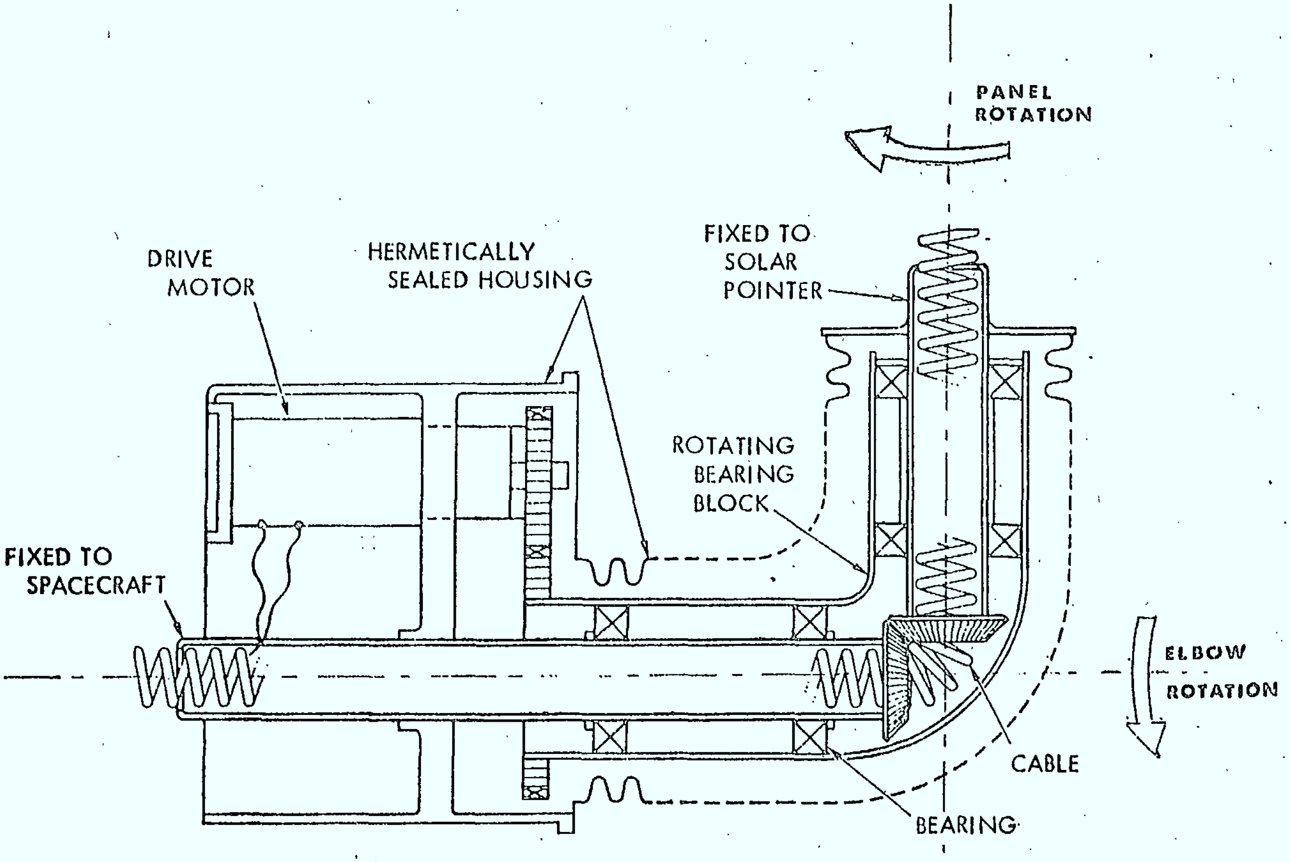

(b) HERMETICALLY SEALED COUPLING

FIGURE 12.0 DIAGRAMS SHOWING PRINCIPLE OF HARD-WIRED COUPLING

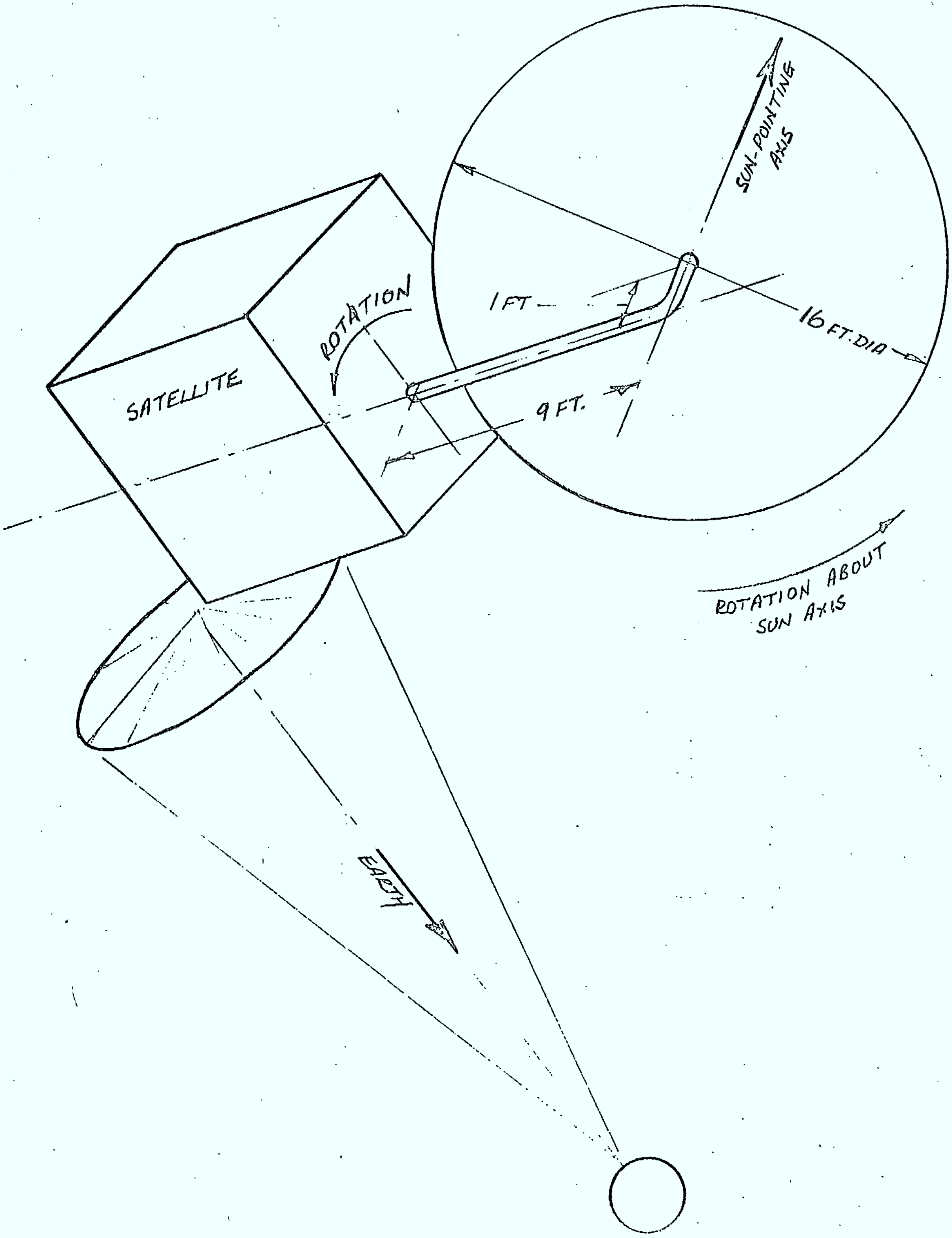

FIGURE 13.0 APPLICATION OF HARD-WIRED COUPLING TO A SATELLITE

of magnetic coupling. The device is essentially the same as a conventional transformer except its geometry is arranged so that the primary and secondary windings can be rotated with respect to each other with negligible changes in the transformer electrical characteristics, permitting energy transfer independent of speed and direction of rotation, from 0 rpm up to moderate speeds. While the use of a rotary transformer avoids many of the more difficult problems associated with slip ring devices, other difficulties arise peculiar to the use of the rotary transformer.

Figure 14.0 illustrates the basic form of transformer. A cylindrical configuration has been used as the forces between core pieces are balanced. This permits smaller support bearings to be employed, and also permits a number of transformers, used either for multiplicity or redundancy, to be conveniently mounted on a single shaft.

* The estimated performance of the conceptual design is given in Figure 15.0.

2.3.10 Discussion

A summary of performance parameters of Candidate power transfer devices is shown in Figure 15. Due to the lack of development status of most of the alternatives to standard brush/slip ring devices, the latter should only be considered for application on the Multipurpose UHF satellite.

The choice that remains, then, is between the metal brush and the composite material brush device. This choice is closely tied into the choice of lubrication philosophy. Metal brush devices must use viscous or wet lubrication. If the philosophy adopted is one of maintaining a single lubrication system throughout the assembly, then wet lubrication would have to be used elsewhere as well. This is not always possible.

The philosophy used on the CTS Solar Array Mechanical Assembly was to have both wet and dry lubrication in the system as long as both types of lubricants used were compatible with each other. In this way, it was possible to use a well-proven metal brush slip ring assembly that was wet lubricated and to use dry lubrication for gears and other sliding parts.

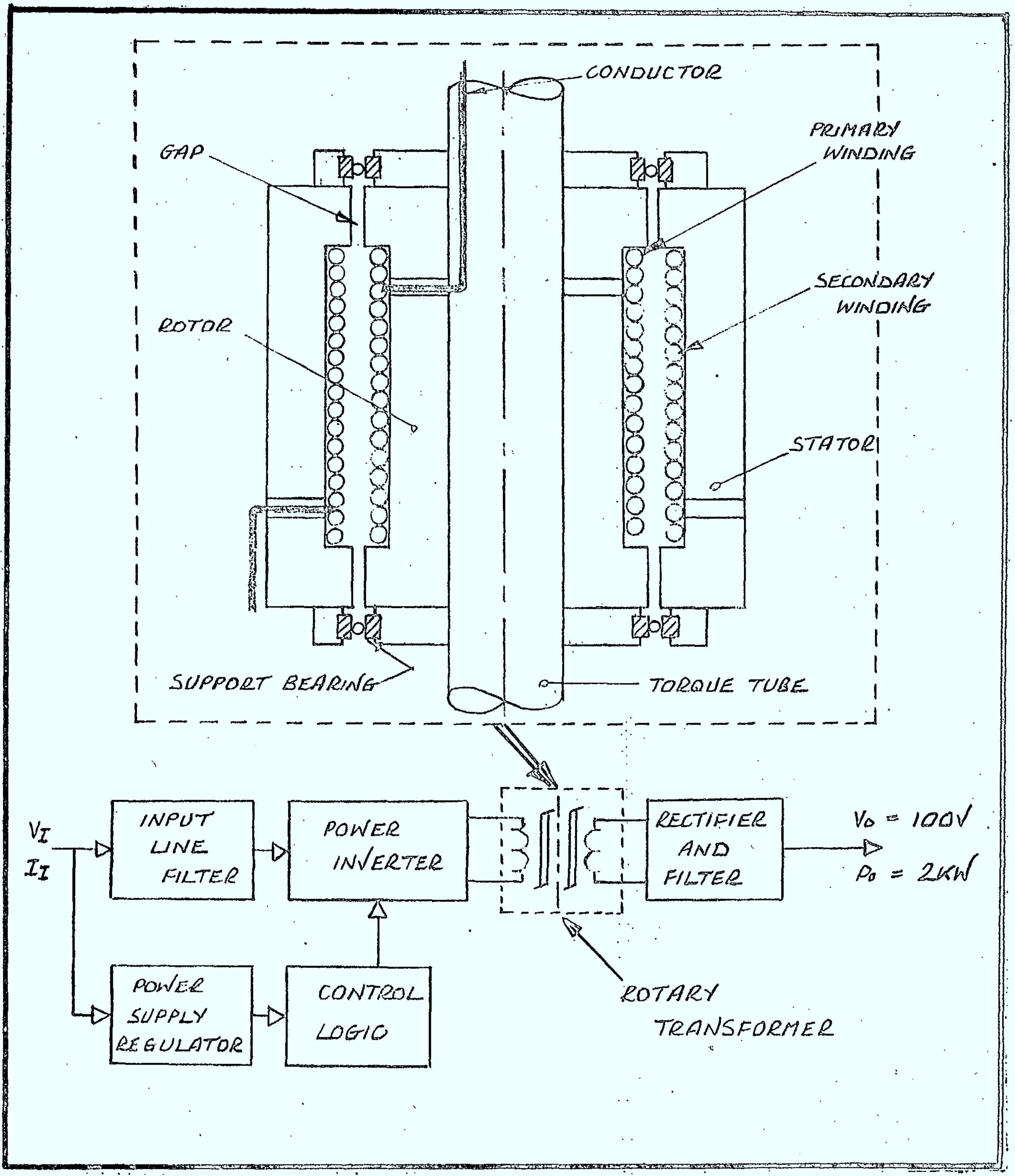

FIGURE 14.0 BASIC FORM OF ROTARY TRANSFORMER

TYPE OF DEVICE	SLIP RINGS	ROLLING ELEMENTS					ROTARY RELAY	LIQUID METAL PLATED	LIQUID METAL RES'VOIR	ROTARY TRANS-FORMER
		BEARINGS	FLEMING	MULTI-ELEMENT	ROLLING BELT	FLEXIBLE ELEMENT				
POWER/WEIGHT RATIO (Kw/lb)	1·89	0·69	0·93	1·38	1·55	1·55	1·08	2·00	0·83	0·20
CONTACT RESISTANCE (mΩ)	5·0	120	1·81	2·03	2·4	1·9	3·0	0·20	0·01	250
NOISE (μV)	12000	160.000	10	—	—	—	1	200	10	5×10^5
VOLUME (cu.in)	28·3	44.2	32·2	30·6	34·0	30·6	30·6	28·3	39·3	440·0
DRIVING TORQUE (oz.in)	20·0	2·24	20·0	12·0	10·0	10·0	8·0	5·20	0·20	0·60
RELIABILITY	HIGH	LOW	LOW	HIGH	HIGH	HIGH	MEDIUM	MEDIUM	MEDIUM	V. LOW
COMPATIBILITY WITH 1·5 IN. SHAFT	YES	YES	NO	YES	YES	YES	YES	YES	YES	YES
LUBRICATION	F. GOOD	F. GOOD	F. GOOD	F. GOOD	F. GOOD	F. GOOD	GOOD	V. GOOD	V. GOOD	V. GOOD

FIGURE 15.0 SUMMARY OF PERFORMANCE PARAMETERS OF CANDIDATE POWER TRANSFER DEVICES

The use of composite material brushes, however, does allow the entire system to be dry lubricated. This choice of a single lubrication system versus a mixed system must be carefully weighed in a more detailed study, taking into account the flight history and test status of the proposed composite material brush slip ring assembly versus that of the proposed metal brush assembly.

2.4 Lubrication

2.4.1 General

Lubricants are generally applied to materials that slide or roll relative to one another, to prevent wear or other surface degradation that would ultimately result in catastrophic failure of the system. The most acute problem that occurs with devices operating in hard vacuum is cold welding, or absorption, a phenomenon that will seize two materials with a bond stronger than the yield strength of either of the base materials. To prevent cold welding, excessive wear, or any other problems that may occur, a lubricant is used at the interface to maintain separation of the base materials. It must ensure separation for the life of the components, but should not out-gas or otherwise contaminate other sensitive equipment in the vicinity. Many materials, particularly some of the more volatile oils will evaporate in a high vacuum environment and then recondense on the colder surfaces in the vicinity. Such recondensed materials can constitute a distinct problem, particularly on any kind of optical surface. The lubricant introduced at an interface may also affect the electrical or thermal design of the system by improving or degrading the electrical and thermal conductivity across the interface. In general, viscous lubricants will improve thermal and electrical conductivity, whilst dry lubricants will reduce thermal and electrical conductivity. Most molybdenum disulphide based lubricants have a very high electrical resistivity.

The choice of a lubricant system must inevitably take account of the base, or substrate material, because upon the degree or nature of the bond between the lubricant and the substrate depends the success of the entire lubrication mechanism.

Lubricants generally fall into two groups - viscous (wet) or dry.

A review of typical solar array drives shows that there are a number of different types of interfaces that may require lubrication:

a) Slip Ring/Brush Interface.
b) Large Main Drive Bearings.
c) Smaller Instrument Type Bearings.
d) Gear Interfaces.

2.4.2 Viscous Lubricants

Viscous lubricants include a variety of oils and greases that may be basically hydrocarbon, silicones, fluorosilicones, etc., with organic or inorganic additives to enhance their properties. A widely used viscous lubricant is Versilube F50 made by the General Electric Company. F50 is a low vapour pressure, low pour point, silicone oil that has been used very successfully in spacial environments. Recently, however, with a general increase in mission life, polymerization of the oil has been shown to be a problem. Polymerization causes interruption of the lubricant film and almost certain catastrophic failure of the interface. Meeks, Cunningham and Christie in their paper "Accelerated Vacuum Testing of Long Life Ball Bearings and Slip Rings" regarded two years as the maximum life that could be expected from F50 oil used in hard vacuum, whereas "hydrocarbon lubricated bearings could be expected to last considerably longer than two years with uniform torques". In noting that lubricant degradation, rather than lubricant depletion is a usual mode of failure, they confirm the general conclusion that has been reached by a number of other researchers.

A silicone grease, G300 has also been used very effectively for lubricating gears and bearings, this material is a mixture of F50 oil and lithium soap used as a thickener, but because it is based on F50 oil it suffers from similar polymerization problems. Another viscous lubricant that has been used in more space applications than any other is marketed under the trade name of "VacKote", a proprietary lubricant made by Ball Brothers. The lubricant "contains metallo-organic complexes and long chain hydrocarbon molecules" - it has a very low vapour pressure and low susceptibility to radiation damage.

Conventional oils and greases can be used effectively by using special seals to contain them. An example is the diester lubricant (Winsorlube L245X made by Anderson Oil Company) used on Nimbus I and Tiros III satellites. This same lubricant has been used by Spar in size 8 DC motors used to drive extendible STEM antennas and booms. None of the treated motors used lubricant reservoirs or seals, and in some instances these motors have remained fully operational for more than 12 months in space. Usually, however, diester based oils and other viscous lubricants are replenished by using a lubricant reservoir. Typically, a bearing may use a retainer made from porous, phenolic laminate impregnated with lubricant, and if required, additional lubricant can be supplied by using a lubricant reservoir made of a material such as Nylasint 64-2 (Polymer Corporation).

In summary, oils and greases can be used to lubricate effectively in a hard vacuum environment. For a mission life of over two years F50 silicone oil is unsuitable because of the polymerization problem. However, tests performed at Ball Brothers and COMSAT show that VacKote is not as susceptible to degradation by ploymerization.

5/CHR/33

2.4.3 Dry Lubricants

Included in this category are the metallic films, self-lubricating composites, surface impregnated lubricants, etc.

In most solid lubricants used in space, molybdenum disulphide is used as a lubricant. It is usually bonded to the surface using a carrier or bonding agent usually an epoxy or polyimide. There are many proprietary lubricants in this category including dry VacKote, Microseal 201, Electrofilm, Lubeco, Molycoat, Dri-slip, etc. These materials are similar in that they use molybdenum disulphide and a binder, but the method of application and the nature of the bond established with the substrate have a marked influence on the integrity of lubricant life performance. One of the problems encountered in using molybdenum disulphide as a lubricant is that it has a very high electrical resistivity. There are a number of applications where this would be detrimental to the system and would prevent the use of a molybdenum disulphide lubricant. In general though, molybdenum disulphide has been found to be a very effective lubricant, as evidenced by many tests and flight applications.

Another dry lubricant that is presently more in the experimental stage is Niobium diselenide. It has one important advantage over molybdenum disulphide in that it is a good electrical conductor. This makes it particularly useful in self-lubricating composites for brushes in a power transfer device or motor. Similar good results have been obtained in tests performed by Westinghouse using metal/tungsten diselenide composites applied to gears and bearings.

Thin metallic films of gold, silver, tin, lead and gallium have been used to lubricate ball bearings and gears. A thin film can be applied using an electrolytic process, plasma spray, sputtering, etc. In almost all cases the development of a metallic film as a lubricant resolves itself into one of establishing and maintaining an adequate bond to the substrate. For instance, Rabinowicz (at M.I.T.) found that in slow speed tests (4 rpm) using lead as a lubricant between two sealed surfaces, results were unsatisfactory because of poor adhesion of the lead to the test specimen. Similar results were obtained by Harris and Wyn-Roberts (Elliott Brothers) in tests of

5/CHR/34

lead on EN32 steel. However, more recently, work done under contract to ESRO by Marconi in the U.K. has shown lead lubrication to be viable. It is in fact being used in the drive system of the OTS spacecraft. Considerable research into the use of gallium and its alloys as lubricants has been performed at NASA Lewis and General Electric. Whilst the results obtained are very promising, the problems of handling gallium, and of its corrosive effect on other materials are sufficient to prevent its use in the immediate future except on an experimantal basis.

Finally, in the range of solid lubrication techniques is the use of self-lubricating materail as a retainer in the bearing. The action is one of replenishment and lubricant transfer from the retainer to the balls, to the races. There are a number of proprietary materials available for use including Duroid, Bemol, Rulon, etc. This approach is very much state-of-the-art, but their application is limited due to the reduction in loadrating of bearings equipped with self-lubricating retainers.

2.4.4 Discussion

The eight year life requirement at one revolution per day is perhaps the most significant operational objective for the solar array drive assembly, but it is important to realize that this actually represents very few revolutions of any component in the system. As a result of the lubrication analysis the following general conclusions can be drawn:

1) When using viscous lubricants concern must be given to the evaporation rate of lubricant and methods of replenishing it.

2) Adhesion of solid film lubricants to their substrate is critical.

3) Self-lubricating retainers should be used carefully because of the significant reduction in the static and dynamic load capacities.

4) Elliott Brothers have found that oil replenishment, per se, is not a problem with viscous lubricated bearings, but that configuration and load are critical. Their test results show that solid film lubricant has a better chance of survival for seven years life at both 3000 and 100 rpm than does viscous lubricant. They also concluded that it is inadmissible to extrapolate test results of dry lubricated bearings on the basis of total number of revolutions or accumulated hours of operation.

5) Johnson and Buckley point out that in the evaporation of inorganic fluids the loss of volatile, low surface tension constituents reduces spreadability, causing lubrication failure because the lubricant will not flow to repair local discontinuities.

6) In a recent paper Mr. C. Vest of NASA Goddard suggested using low vapour pressure oils and greases for up to six years life and thereafter suggested using dry lubrication.

7) In tests performed by Hughes Aircraft Company they showed that the ultimate life of bearings with F50 oil operated at 50 rpm was less than two years, but hydrocarbon lubricated bearings were expected to give significantly longer life. They concluded, as have many other researchers, that oil supply for up to ten years is not a problem. Polymerization of the oil was shown to be higher at lower speeds. Correlation was shown between wear, film thickness and polymerization - wear was shown to be inversely proportional to oil film thickness and film thickness was inversely proportional to the rate of polymerization.

8) Lead lubrication is being used in Europe.

On the basis of results of tests conducted to date and experience on various mechanisms, it is difficult to reach any definitive conclusion on the preferred choice of lubricant. Dry lubricants have the advantage over wet in not being vulnerable to lubricant depletion due to evaporation or migration and to breakdown due to polymerization.

However, an advantage of wet lubricants is the self-healing property which cannot be achieved in dry lubricants. In order to avoid concern over lubricant depletion and breakdown, it is suggested (see Section 4.0) that a mixed lubricant system be used throughout the solar array drive assembly for lubricating gears, bearings and the power transfer device. More detailed definition of the particular lubricants to be used should be performed later when the solar array drive assembly itself has been better defined.

3.0 SAOPT TECHNOLOGY SURVEY

3.1 General

The purpose of this survey was to establish the present status of existing solar array drives. In addition it was intended to locate potential vendors having a mechanism which could be used or be adapted for use on the UHF Satellite project. The main guide lines in evaluating the Solar Array Orientation and Power Transfer (SAOPT) mechanisms were:

- reliable operation throughout the eight year mission,
- full functional redundancy to prevent mission termination resulting from a single-point failure,
- ability to drive representative array inertias at acquisition slew rates as well as orbital rate,
- to provide adequate torque margins relative to the expected bearing and slip ring frictions.

To cover the SAOPT field various mechanism manufacturers were contacted and visits were made when necessary, to obtain available information on their products. The data accumulated during this survey has been assessed relative to the UHF Satellite project and is presented in this report.

While visiting the SAOPT mechanism builders, it was clearly noted that most large companies had a tight-lipped attitude regarding the disclosure of mechanisms details and performance. However, a considerable amount of valuable information was collected which shows considerable disagreement between various companies as to the best design approaches to design SAOPT mechanisms. Resulting from this, there is a large variety of different solar panel drive mechanisms in existence as shown in this report.

Most of the data gathered during this survey has been obtained on a gentleman's agreement that it will be used for the purposes intended only, and that survey results will be kept restricted.

This section presents descriptions of numerous SAOPT systems, which were covered during this survey. All mechanism descriptions are not discussed in the same detail, because of the lack of information given by some vendors. Generally, the amount of detail given in this section is directly proportional to the information supplied. Reasons for withholding detail data were as follows:

- classified project
- still under contract
- proprietary information

When the accumulated data is analyzed, it becomes clear that all modern SAOPT mechanisms fall into two basic categories. One category of array drives uses geared steppers; the second uses the direct drive principle.

3.2 Vendors Contacted

Prior to contacting any SAOPT mechanism vendors, a list of potential candidates was prepared. During this stage, it was established that only a few companies in the past have produced such mechanisms. Many manufacturers have related product experience in antenna drive machanisms, gimbal drives positioning mechanisms and other similar devices. Although these devices have operated for long periods in space, SAOPT requirements are so different that these mechanisms are not adaptable for use as solar panel drive mechanisms; therefore, this survey was limited to vendors that have SAOPT mechanisms experience only. The following is a list of companies and persons that have been contacted.

*

LIST OF COMPANIES CONTACTED

COMPANY	LOCATION	PERSON CONTACTED	PHONE OR ADDRESS
Ball Brothers Research Corp.	Denver, Colorado, U.S.A.	R. Phinney	(303) 441-4232
General Electric	Valley Forge PA., U.S.A.	G. Tyrell R. Stanhouse	(215) 962-2787 (215) 962-3443
Hughes Aircraft	Los Angeles Calif., U.S.A.	G. Wolfe	
LMSC	Sunnyvale, Calif., U.S.A.	R. Given	(408) 742-7151
TRW	Los Angeles, Calif., U.S.A.	J. Randall	(213) 535-1651
Scheaffer Magnetics	Los Angeles, Calif., U.S.A.	E. Scheaffer	(213) 341-5156
Hawker Siddley	Stevenage, U.K.	J. Standing	(438) 3456
Marconi SDS	Frimley, Hempshire, U.K.	M. Warwick	Fornborough 44462 Ext. 68
Fairchild Indust.	Germantown, Md., U.S.A.	G.A. Smith	(301) 428-6000
RCA Astro	Hightstown, N.J., U.S.A.	D. Binge	(609) 448-3400
Bendix Corporation Navigation and Control Division	Teterboro, N.J. U.S.A.		

Of these companies, Hughes Aircraft and Fairchild did not have any devices to offer. Hawker Siddley Dynamics did not respond to the request for information. Data for the HSD device being used on OTS is therefore scant. Material has been drawn from a previous paper by ESTEC.

Visits were made to Ball Brothers, General Electric, LMSC, TRW and Scheaffer Magnetic.

3.3 Description of Existing Systems

3.3.1 Ball Brothers Research Corporation

3.3.1.1 General

BBRC has been developing and building electromechanical systems for despinning and pointing antennas, solar arrays and scientific experiments for space applications since 1956. In addition, they have developed lubrication processes for use on space operable unsealed mechanisms that have been proven on most major satellite projects. BBRC have designed and built two solar array drive systems.

3.3.1.2 Drive System No. 1

This is a single unit that drives two solar arrays coupled by a torque tube (see Figure 16.0). The system was supplied to TRW for a classified project. It consists of a drive and slip ring module, a resolver module, and a drive shaft. A flange at each end provides attachment for the respective satellite solar panels. The drive housing and resolver module housing attach to the satellite structure. The drive assembly bearings completely support the shaft and satellite solar panels during in-orbit operation.

The drive module consists of a pair of (redundant) brush-type Inland DC torque motors, a slip ring assembly, housings, and bearings. The resolver module consists of a Kearfott precision resolver together with its housing, bearings, and electrical connector. The drive shaft is designed to support up to 1600 lb-in. bending moment and has a stiffness (EI) of 280,000 lb-in.

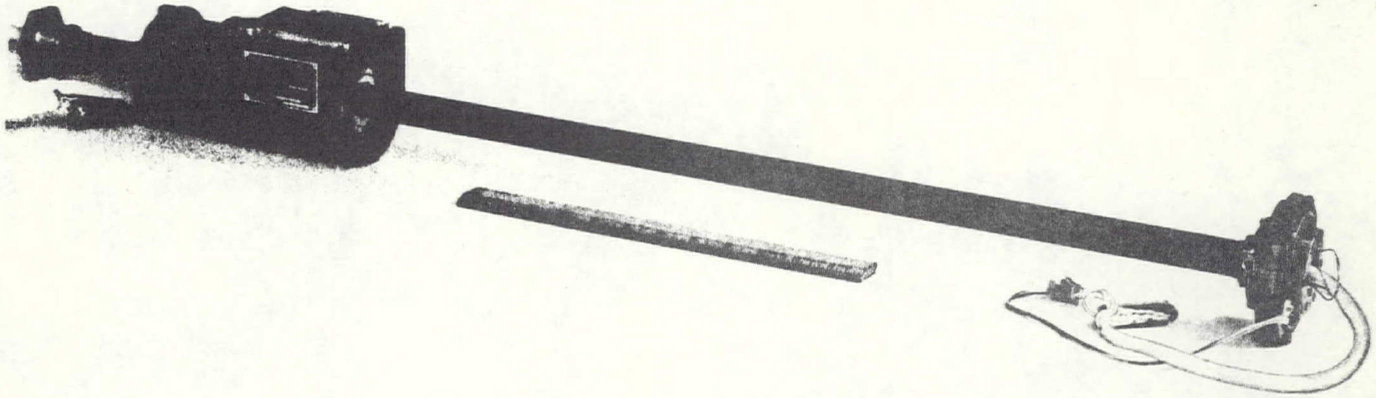

B.B.R.C. TYPE I ARRAY DRIVE

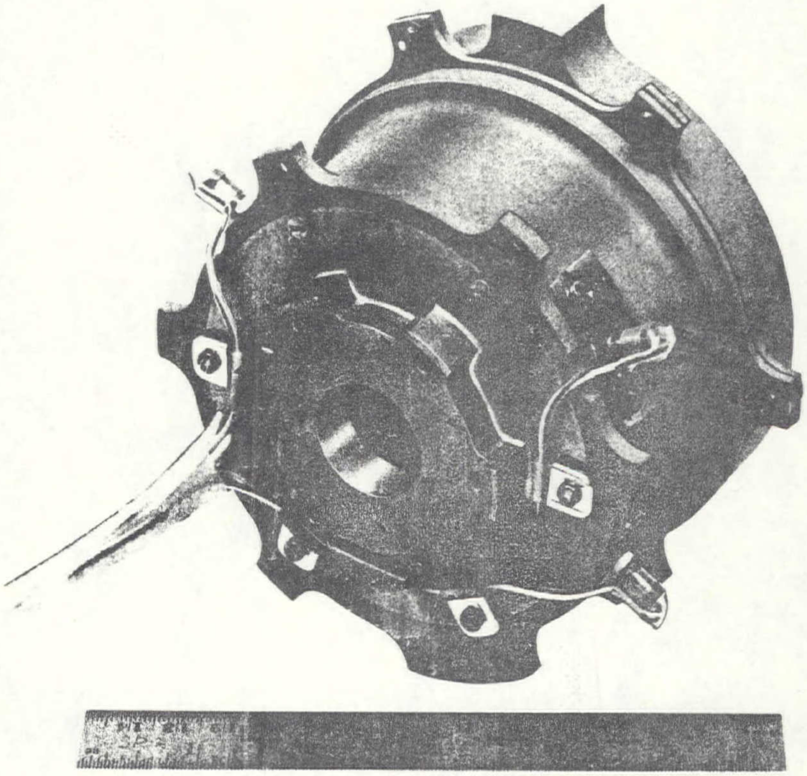

B.B.R.C. TYPE II ARRAY DRIVE FIGURE 16.0

The bearings, torque motors, and slip rings are lubricated with BBRC thin-film fluid lubricant, VacKote. The drive and slip ring module contains four bearings, two for the torque motors and two for the modularized slip ring assembly. The resolver module has two bearings. Shaft loads are supported by the motor and resolver bearings; the slip ring bearings are entirely separate and unloaded in order to prevent slip ring rotor distortion.

The following is the basic specification for this solar array drive:

Weight (less electronics)	8 lbs.
Life	greater than 3 years
Speed	1 rev. per day 100 rev. per day slew
Torque (each motor)	60 oz. inches
Slip Rings	16 power @ 3.0A ea. 30 sig. @ 0.3A ea.
Array inertia	0.5 slug ft.^{2}
(2) Motors (Inland)	Brush type DC torquer
Type of drive	Direct

3.3.1.3 Drive System No. 2 (Figure 16.0)

This SAOPT drive mechanism is presently under development for the Global Positioning System, and will be qualified by February, 1976. BBRC were reluctant to supply detail design information on this drive since it is being bult under an ongoing contract.

The drive mechanism uses two independent DC brush type torque motors driving the output shaft directly. During the power-off phase only the slip rings, bearings and armature provide the holding torque of approximately 20 oz. inches.

Although this solar panel drive is designed to drive each array separately, it can be readily modified for a "through shaft" operation by adopting the No. 1 system slip ring assembly.

5/CHR/42

To drive the array the torque motor is used in a 'stepper mode" i.e., motor receives a shaped fixed duration pulse which rotates the armature approximately 1/8°. The step size does vary with change in friction, line voltage variations, temperature, etc. This is acceptable since the system is designed to have the tracking loop closed through sun sensors.

This solar panel drive system meets the following requirements:

Size: 7" dia. by 5 1/2" long (drive assembly)

Weight: 9.5 lb.

Step size: 0.12 degree nominal (varies with friction variations, line voltage variation, temperature, etc.

Nominal speed: Orbit rate

Slew Speed: 15 degrees/min. nominal (60 rev/24 hr. day)

Hold torque: 10-30 ounce inches

Drive torque: 200 ounce inches nominal

Power slip rings: 4 rated 10 amperes each (because of dry lube)

Signal slip rings: 30 rated 0.1 amps each

Qualification Status: Under development. To be qualified by February 1976

Lubrication System: Mechanism and slip rings are dry VacKote lubricated

Nominal Mission Application: 12,000 NM, 12 hr. Orbit

Other Mission Profiles: Any solar pointing mission

Average Power Consumption: Quiescent consumption less than 1 watt Power pulse 35 watts at 25 ms

Nominal: 28 volts operation

Temperature Range: -30° +70°C

Other Information:

a) Uses direct drive DC motors (no gears).

b) Unit has a position sensor for positive feedback.

c) Unit incorporates redundant motors and position sensor.

d) A control option which gives controlled output step size is available.

e) Reliability for 5 years of a system consisting of two drives, redundant electronics for each drive and redundant sun sensors for each drive is .975.

3.3.2 Scheaffer Magnetics Inc.

3.3.2.1 General

Scheaffer Magnetics Inc. (SMI) is a small company located in Chatsworth, California. It employs approximately 20 people and is managed by Mr. E. Scheaffer. Their main product line is super high quality electromechanical drive systems which have been flown on most major space projects (Apollo, Surveyor, Viking, etc.). Although small, this company has a product control system that meets all NASA quality assurance requirements. Recently Scheaffer Magnetics have delivered a Solar Array Orientation mechanism to an unnamed customer. This unit within the next two months will start qualification thermal vacuum testing. In addition SMI have two other SAOPT designs which will be discussed in detail.

5/CHR/44

3.3.2.2 Type I Solar Panel Drive Assembly

This SMI drive mechanism was designed for an unnamed customer to drive each solar array individually with slip ring assemblies and drive electronics supplied by the customer. As shown in Figure 17.0 the redundant differential type drive mechanism was customer specified.

As can be seen from the Figure 18.0, one of these drive units can be easily adapted for use on UHF project by the addition of a slip ring assembly mounted on a torque tube.

3.3.2.2.1 Technical Description

The Type I Drive Assembly is illustrated physically in SMI drawing No. 101545 (Figure 17.0). The unit consists of two identical (except for housing detail), independent motor and gear train combinations, assembled face-to-face to provide summation of their outputs through a 1:1 bevel gear differential. The differential spider pinion carrier in turn drives a single output shaft through a self-aligning coupling.

Each transmission system provides an overall reduction ratio of 1800:1. In the specified operational mode i.e., operation of only one motor at a time, the planetary reduction of 2:1 through the differential results in the specified overall reduction ratio of 3600:1.

To achieve planetary driving through the differential requires that the inactive side be locked from rotation so that it may serve as the reaction member of the planetary system. The SMI P/N 101545 Drive Assembly accomplishes anti-backdrive locking by a dual means i.e. the use of an "irreversible" worm drive to the differential input and relatively high, power off, magnetic detenting (1.5 in-oz., minimum at the motor shaft) of the stepper motors.

The design of the SMI P/N 101545 Drive Assembly, thereby, precludes the need for electrical and/or mechanical braking devices which degrade the overall reliability of the Drive Assembly, having at least two, on and off, failure modes each.

REL CLASS	DISTR CODE	REVISIONS				
		ZONE	LTR	DESCRIPTION	DATE	APPROVED

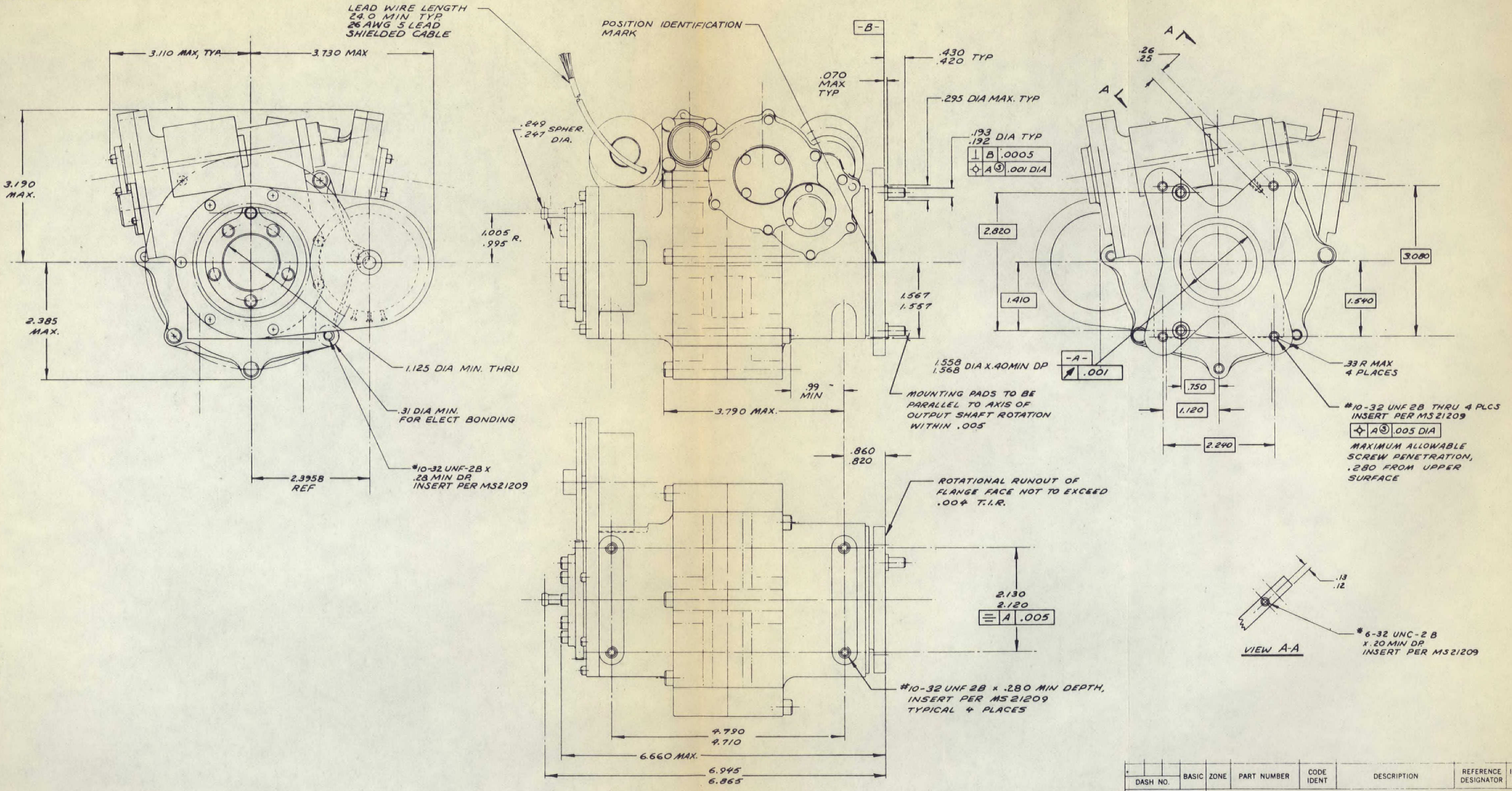

DASH NO.	BASIC	ZONE	PART NUMBER	CODE IDENT	DESCRIPTION	REFERENCE DESIGNATOR	ITEM NO.
REQD PER ASSY	PARTS LIST						

UNLESS OTHERWISE SPECIFIED
INTPR DWG PER MIL-STD-100
DIM. ARE IN INCHES
DO NOT SCALE DRAWING
DIM. TO BE MET AFTER FINISH
DIA ◎ TIR
SURFACE ROUGHNESS √

CUSTOMER & SPEC
SIMILAR TO

MATERIAL
HEAT TREAT
FINISH
NEXT ASSY
USED ON

CONTRACT NO.
DRAWN BY SMITH DATE 2-6-75
CHECKER Landan 2-6-75
DESIGNER
MECH APPR
ELEC APPR
APPROVED M. Jordan 2/6/75

SMI
SCHAEFFER MAGNETICS, INC.
20416 CORISCO ST., CHATSWORTH, CA91311

TITLE DRIVE ASSEMBLY TYPE I.

SIZE D
CODE IDENT NO. 29371
DWG NO. 101545
SCALE FULL
WT
SHEET

FIGURE 17.

NOTES: UNLESS OTHERWISE SPECIFIED

SMI #160 (5 70)

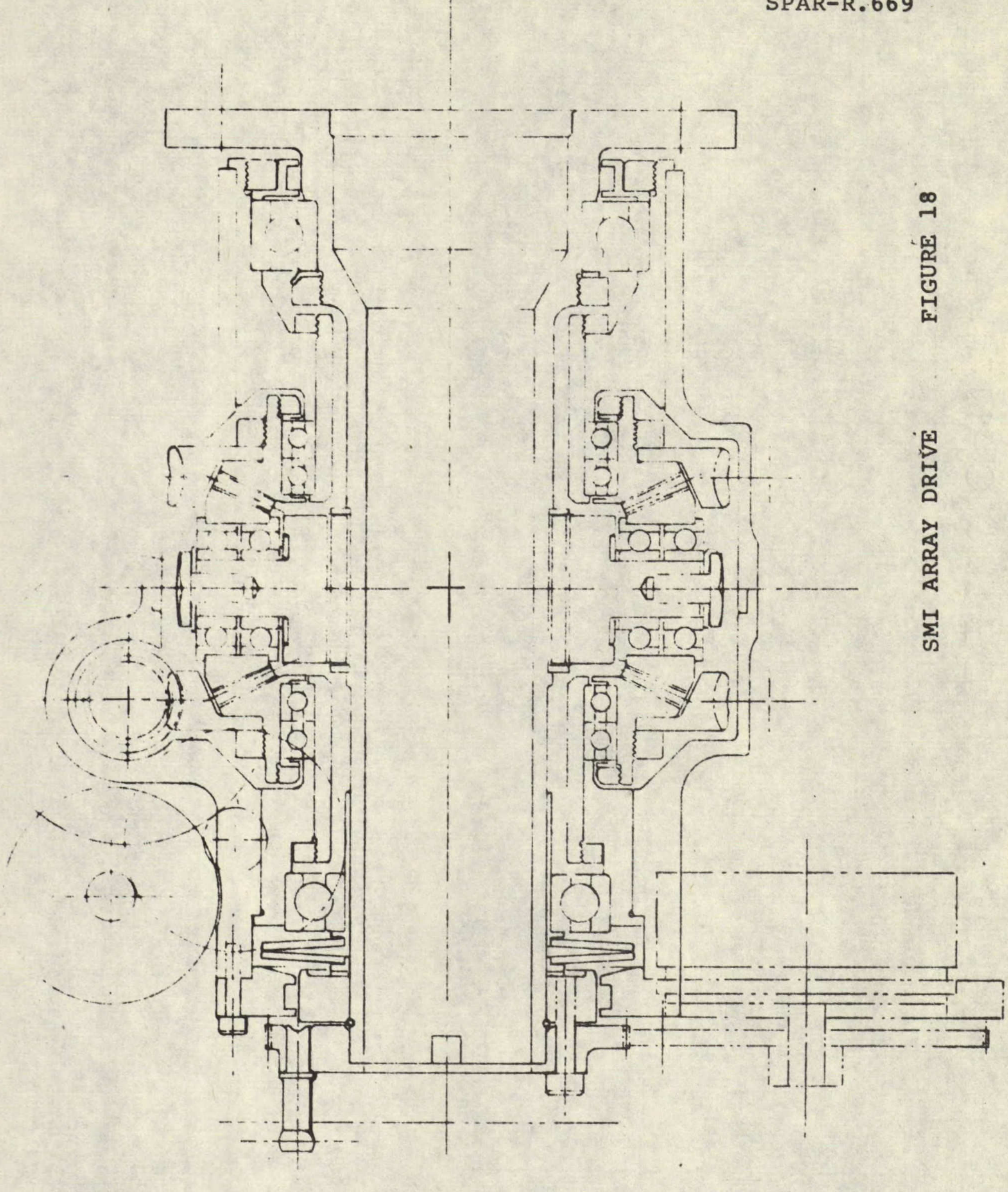

SMI ARRAY DRIVE FIGURE 18

Because of their mechanical symmetry, the two redundant Motor/Transmission systems bear a common description.

Each Motor/Transmission assembly is comprised of:

A Schaeffer Magnetics Inc. size 15, 90°, permanent magnet stepper motor with integral drive pinion.

A Countershaft comprised of the 1st Pass Gear, the 2nd Pass Pinion and bearing shaft diameters.

A Worm Shaft containing the 2nd Pass Gear and bearing shaft diameters.

An Output Gear Assembly consisting of a Worm Wheel and a Bevel Differential Gear with bearing housing bore.

Output Gear Assembly Shaft and attendant Housing bearing, fasteners, etc.

3.3.2.2.2 Motor

The Motor is a basic SMI size 15, 90° permanent magnet stepper configuration currently qualified for and used on the NIMBUS E, NIMBUS F, and ERTS satellites. Unlike competitive steppers the unit was specifically designed for spaceflight applications.

3.3.2.2.3 Worm Shaft

The Worm Shaft consists of a 0.1667 in. pitch, single lead, 25° P.A., hardened and ground worm made integrally with the 207 tooth 2nd Pass Spur Gear which engages the 2nd Pass Pinion on the Countershaft. The Worm Shaft has, therefore, a reduction ratio of 207/24 with respect to the Countershaft and (75/23) (207/24) = 28.125:1 with respect to the motor shaft.

Possible thrust loads on the Worm Shaft of ±274 lb. in the peak stall condition predicated the use of face-to-face, stiffly preloaded bearings to axially retain the Shaft at the worm end while sustaining the greater part of the 165 lb. maximum radial load that can be generated by the worm.

3.3.2.2.4 Output Gear Assembly

The Output Gear Assembly consists of a 65 tooth Worm Wheel assembled permanently to the Differential Bevel Gear to form a single component. The Assembly is provided with a bore which accommodates a pair of 2.0000 in. x 1.5625 in. x 0.250 in. angular contact bearings, matched and preloaded back-to-back and externally shielded. The bearing inner races are in turn supported by the tubular Output Gear Assembly shaft which provides a rigid structural connection between the Output Gear Assembly and the Housing.

This mounting system provides the essential dimensional control between the axis of the Worm Wheel and the Worm.

The Differential Bevel Gear is generated concentric to the bearing housing bore and finished by lapping to the mating pinions. The Worm Wheel blank is subsequently mated to the back face and hub diameter of the gear and the Worm Wheel teeth generated concentric to the bearing housing bore.

3.3.2.2.5 Housing

Each Motor/Transmission Assembly is provided with an individual aluminum alloy main housing. While the internal configurations of the housings are identical in those areas related to the motor/transmission system, there are geometrical differences related to installation and support of the Drive Assembly Output Shaft, accommodation of the position sensing potentiometer installation and assembly and piloting of the individual housings to each other.

3.3.2.2.6 Differential

One of the problems associated with the use of bevel gear differentials as precision planetary drives, particularly when load levels are sufficient to require two or more spider gears, is obtaining and maintaining sufficiently accurate alignment of all components on all axes to ensure adequate load sharing, constant geometric angular velocity, consistent gear tooth clearances, etc. This problem is further aggravated by the need to maintain the simultaneous alignments of other drive elements structurally associated with the differential.

A unique feature of the SMI differential design is a free floating spider gear carrier which minimizes the number of precise alignments to be controlled and permits the differential spider pinions to align themselves axially and radially in response to load forces to ensure equal load distribution. Only in this manner can the analytically derived gear stress and bearing loads be relied upon to be accurately duplicated by the end product.

This is accomplished by mounting the differential spider pinions on trunnions provided on a yoke which interfaces with the output shaft through a self-aligning (Oldham) type coupling.

3.3.2.2.7 Output Shaft & Bearing Support

The Output shaft is a one piece tubular shaft with an integral Solar Panel mounting flange at one end. It is provided with a shaft seal interface diameter and a 35 mm bearing mounting diameter on the flange (outboard) end.

Anti-friction bearing support of the Output Shaft is given by a pair of 55 mm (OD) x 35 mm (ID) x 10 mm bearings at the flange (outboard) end of the shaft and by a pair of 37 mm (OD) x 25 mm (ID) x 9 mm bearings at the inboard end. Each bearing pair is matched and preloaded face-to-face to render the four-in-line bearing system alignment less critical.

The flange (outboard) end bearings are clamped in the housing and on the shaft so that they axially locate the shaft with respect to the housing and sustain the thrust loading. The inboard bearing set is clamped in the housing only. Differential thermal expansion and minor structural deflections are, thereby, accommodated without sacrifice of a radial or axial rigidity or the sustained bearing preload essential to survival of the bearings through vibration and shock without risk of Brinnelling.

3.3.2.2.8 Potentiometer (Position Sensor) Drive

The Potentiometer Drive provides precise, anti-backlash, 1:1 ratio rotation of the potentiometer shaft. The drive is capable of "climbing out" of mesh to preclude any possibility of interfering with Drive Assembly operation.

The potentiometer shaft is connected to the worm wheel shaft by an intermediate drive shaft with a metal bellows coupling at each end, to provide a constant geometrical velocity universal drive. This permits rigid mounting of the potentiometer to the Housing to improve the probability of survival of the potentiometer through launch vibration.

3.3.2.2.9 Lubrication System

The Lubrication System is two-phase, initial and sustaining. Initial lubrication is provided by the application of lubricant to the surfaces having relative motion, i.e, bearings, gears, and Harmonic Drive Splines on assembly.

Sustaining lubrication is accomplished by the impregnation of a Nylasint reservoir with lubricant to be dispersed throughout the mechanism by means of vaporization redeposition.

For both lubricant phases, Krytox (Dupont) lubricants have been selected because of their tenacity and creep resistance combined with low vapour pressure. The particular grade of Krytox to be used in each area for initial lubrication may vary because of different torque levels, velocities and local operational temperatures. Additionally, the sustaining lubricant grade may differ from those used for initial lubrication.

3.3.2.3 Type II & III Solar Panel Drives

These two drive mechanisms are similar since both use harmonic speed reduction output shafts. In both SAOPT mechanisms the wave generators are driven by the stepper motors. The main difference between the two drives is:

a) Type II design uses two independent 4.75 inch diameter 3.75° per step motors driving directly a common wave generator as shown in Figure 19.0. The output shaft rotation in this drive is 0.023° per pulse.

b) Type III mechanism is designed such that two size 15, 90° per step motors which are mounted on a common shaft, drive a wave generator through a 2 stage spur gear reduction. This mechanism has an overall reduction ratio of 1800:1 and is shown in Figure 20.0. In this design the array rotates .05 degrees per pulse.

Both array drive mechanisms are designed to be operated as single or torque coupled array drives. It should be noted that SMI designs do not provide slip ring assemblies; this arrangement allows the customer to use his own proven slip ring assemblies.

3.3.2.3.1 Harmonic Drive

The high confidence level of success for the harmonic output stage is based on the previous space usage of similar hardware. This statement was made by SMI and was later substantiated by TRW and can be seen by the summary table in Section 3.3.4.2.2. The inherent mechanical characteristic of this drive is that it consists of flex spline, wave generator and circular spline ring.

5/CHR/50

NOTICE!

This drawing is part of the proprietary article herein disclosed owned by Schaeffer Magnetics Inc. The United States (or other party to whom furnished or having possession hereof), by accepting this drawing, assumes custody and control hereof and agrees:

(A) The information set forth herein is given in confidence, and this drawing will not be copied or reproduced in whole or in part nor its contents revealed in any manner to any person except to meet the purpose for which it was delivered.

B Without the written consent of Schaeffer Magnetics, Inc. this drawing in whole or in part and the information contained herein under no circumstances will be used in the manufacture or reproduction of the article shown and delivery of this drawing shall not constitute any right or license to do so.

This legend shall be marked on any reproduction hereof in whole or in part.

REL CLASS	DISTR CODE	ZONE	LTR	REVISIONS DESCRIPTION	DATE	APPROVED

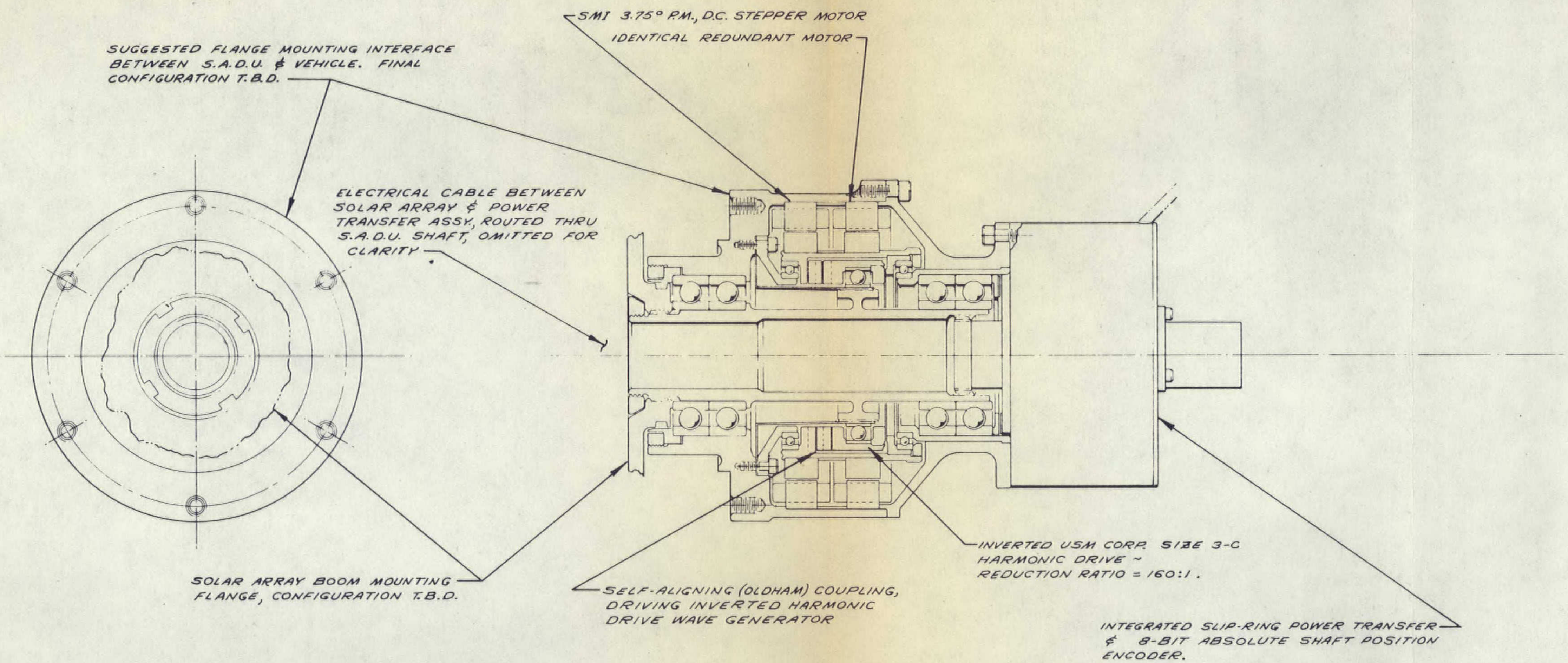

USE OR DISCLOSURE OF PROPOSAL DATA IS SUBJECT TO THE RESTRICTIONS STATED ON TITLE PAGE OF S.M.I. PROPOSAL No. SEQ

DASH NO.	BASIC	ZONE	PART NUMBER	CODE IDENT	DESCRIPTION	REFERENCE DESIGNATOR	ITEM NO.
REQD PER ASSY					PARTS LIST		

FIGURE 19.

UNLESS OTHERWISE SPECIFIED
INTPR DWG PER MIL-STD-100
DIM ARE IN INCHES
DO NOT SCALE DRAWING
DIM. TO BE MET AFTER FINISH
DIA ⊙ TIR
SURFACE ROUGHNESS √

CUSTOMER & SPEC
SIMILAR TO

MATERIAL
HEAT TREAT
FINISH
NEXT ASSY
USED ON SEQ

CONTRACT NO.
DRAWN BY SMITH DATE 4-29-74
CHECKER
DESIGNER
MECH APPR
ELEC APPR
APPROVED

SCHAEFFER MAGNETICS, INC.
20416 CORISCO ST., CHATSWORTH, CA91311

TITLE DESIGN LAYOUT OF P/N 101405
SOLAR ARRAY DRIVE UNIT
~TYPE II~

SIZE D
CODE IDENT NO 29371
DWG NO. 101403
SCALE
WT
SHEET

101403

NOTES: UNLESS OTHERWISE SPECIFIED

SMI #160 (5-70)

REL CLASS	DISTR CODE	ZONE	LTR	REVISIONS DESCRIPTION	DATE	APPROVED

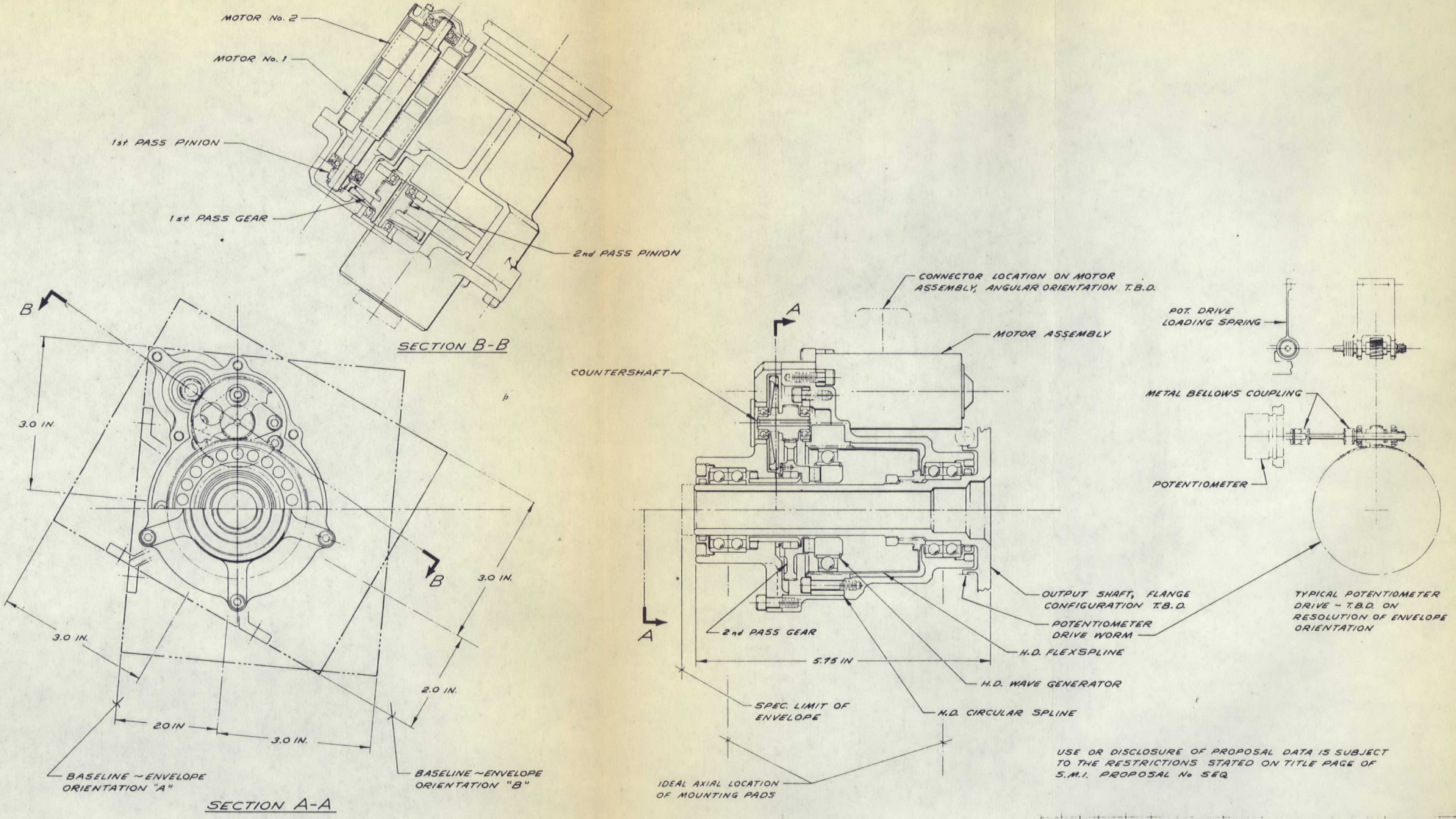

USE OR DISCLOSURE OF PROPOSAL DATA IS SUBJECT TO THE RESTRICTIONS STATED ON TITLE PAGE OF S.M.I. PROPOSAL No SEQ

DASH NO.	BASIC	ZONE	PART NUMBER	CODE IDENT	DESCRIPTION	REFERENCE DESIGNATOR	ITEM NO.
REQD PER ASSY	PARTS LIST						

UNLESS OTHERWISE SPECIFIED INTPR DWG PER MIL-STD-100 DIM. ARE IN INCHES DO NOT SCALE DRAWING DIM. TO BE MET AFTER FINISH DIA ◎ TIR SURFACE ROUGHNESS √	MATERIAL	CONTRACT NO.	SCHAEFFER MAGNETICS, INC. 20416 CORISCO ST., CHATSWORTH, CA 91311
		DRAWN BY SMITH — DATE 10 26 73	TITLE DRIVE ASSEMBLY — SOLAR PANEL - TYPE III
		CHECKER	
	HEAT TREAT	DESIGNER VS 10/26/73	
		MECH APPR mJ. 10-26-73	
CUSTOMER & SPEC		ELEC APPR	
SIMILAR TO	FINISH	APPROVED 10-26-73	SIZE D — CODE IDENT NO. 29371 — DWG NO. 101253
	NEXT ASSY — USED ON 101255		SCALE FULL — WT — SHEET

FIGURE 20.

NOTES: UNLESS OTHERWISE SPECIFIED

101253

A typical single stage speed reduction is in the 80-200 range, which is achieved at 75-85% efficiency. The most significant characteristics of the harmonic drive are:

a) The nature of both motions of the two splines is such that the mating teeth engage and disengage at very low relative velocities and the tooth sliding is of the order of a few hundred thousandths of an inch.

b) Teeth under load are stationary and at zero pitch lince velocity. At least 10 percent of the teeth are in contact during transmission of load.

c) The harmonic drive transmits load as a pure couple; therefore, the tangential and separation forces are not imparted to the bearings as is the case in conventional gear transmissions.

d) Fatigue tests conducted with full rated load have shown the drive endurance cpability to be more than 3×10^9 compared to a requirement of approximately 4.5×10^5 stress cycles.

The Type II design is an inverted harmonic drive, i.e., the circular spline is a part of the output shaft with flex-spline attached to the solar array drive housing. Both motor armatures are mounted on the outside of the external wave generator as shown in Figure 19.0.

The Type III design uses the flex-spline member of the harmonic drive to attain the necessary shaft motions. The circular spline is kept stationary by a structural member which also is used for support of the motor bearings. The motor rotational input is provided to the harmonic drive wave generator via a large bore Oldham coupling which isolates the generator bearing from those of the motor subassembly. The harmonic drive backlash is less than 10 seconds of arc.

3.3.3 General Electric Space Division

3.3.3.1 General

To meet the life and reliability requirements of ten year space missions, a solar array drive mechanism for 3-axis stablized vehicles has been developed and has undergone life-test. The drive employs a redundant lubrication system to increase its reliability. An overrunning clutch mechanism is used to permit block-redundant application of two or more drives to a common array drive shaft. Two prototype actuator and clutch assemblies, in continuous vacuum life-test under load at 10^{-8} torr for more than sixteen months, have each accumulated more than 34,000 output revolutions without anomaly, the equivalent of nearly ninety-five years at synchronous altitude.

The Japanese Broadcast Satellite Experiment (BSE) being built by G.E. uses two such mechanisms on a common through shaft.

3.3.3.2 Drive Mechanism Description

The drive is comprised of a high torque, 1.8 degree/step permanent magnet stepper motor; a 100:1 harmonic drive torque multiplier; 6:1 spur gear output stage; and a fully redundant lubrication system. The single-active-element clutch which automatically couples the drive actuator to the solar array shaft during drive operation permits the use of two actuators on a spacecraft to provide full redundancy of the array drive function. A cross-sectional layout of this drive is shown in Figure 21(b) in the redundant (clutch coupled) configuration.

The motor drives the input of the 100:1 reduction harmonic drive, which in turn drives the pinion of the 6.05 spur gear reduction. The hollow-spur-gear shaft also serves as the input hub for the wrap spring clutch, which drives the array shaft through the spring clutch driven hub when the motor is operating. All major drive train components of the drive are shown sequentially in Figure 21(a). From right to left, they are:

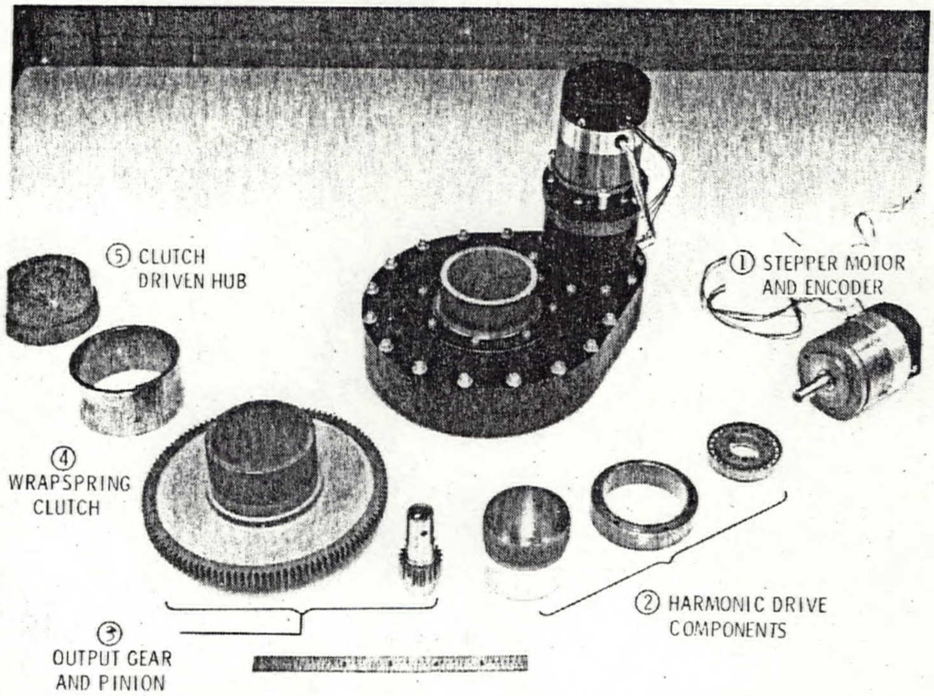

(A) Major drive train components of advanced solar array drive shown with assembled SADA prototype unit in background.

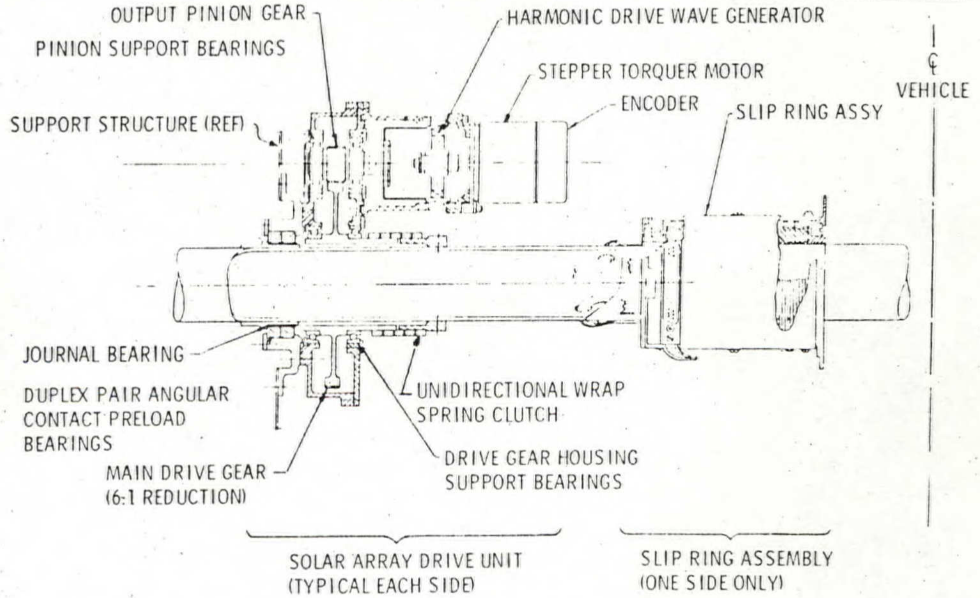

(B) Layout of advanced solar array drive in typical vehicle installation.

G.E. ARRAY DRIVE

FIGURE 21.0

a) The stepper motor with shaft position encoder.

b) First reduction harmonic drive wave generator, circular spline, and flex-spline.

c) Second reduction pinion, and output gear with integral clutch drive hub.

d) Wrap spring clutch.

e) Clutch driven hub, which attaches to the drive vacuum life-test fixture shaft.

Both drives can be operated simultaneously and the torque of each actuator will be additively applied to the load. Overshoot of the arrays is prevented by the drag torque of the clutches when the drive is not operating and by the friction of the power transfer slip rings and shaft support bearings.

3.3.3.3 Motor

The high-torque stepper motor has a machined one-piece rotor and an encapsulated wound field structure. Stepping is accomplished through sequencing of drive current to the four-phase winding by switching transistors and the consequent interaction of magnetic fields. The only contacting mechanical members in the motor are the two precision ball bearings which support the rotor.

3.3.3.4 Lubrication

To enhance the reliability of the drive, a dual lubrication system is provided. All gears and bearings of the actuator are lubricated with space-proven liquid lubricants, Krytox AC oils and greases. Wiping lip seals and anti-creep barrier films are provided at the output shaft of the actuator to retain this lubricant within the actuator housing for flight use. In addition, all surfaces requiring lubrication are coated with compatible space-proven dry lubricants based on plated low-shear strength metallic films or transfer-lubricating polymer film-generating materials. These dry lubricants provide a backup in the event of loss of liquid lubrication.

3.3.3.5 Clutch

The wrapspring clutch is the key to providing the desired functional (block) redundancy to increase the reliability of the array drive system. Two or more drive mechanisms may be coupled to the solar array shaft through these one-piece overrunning clutches. Any or all drives may be operated with additive output torque in the multiple drive case, and any drive can be held in the backup mode without interfering with the operation of any other drive. Each clutch engages automatically when pulsing of the drive's motor ceases. The clutch is lubricated only with a dry lubricant film bonded to the hard anodized hubs which it interconnects.

Rotation of the drive output shaft causes the preloaded clutch spring to tighten with virtually no lost motion about both the driving and driven shafts, locking them together and transmitting the drive motion accurately to the solar arrays.

Motion of the array shaft in the normal direction of array rotation relative to the actuator output hub of each drive disengages the clutch so that a low but constant frictional drag 0.3 N-m (.25 ft-lb) is present at the non-driving clutch. Either drive may rotate the array shaft while the other remains stationary, and full functional drive redundancy results.

3.3.3.6 Encoder

In the unit subjected to life test, an optical resolver was used. Rotation of the motor is sensed by the resolver, an optical encoder comprised of a light emitting diode, a photosensitive transistor, and a 200 line chopper disc which interrupts the optical path each time the motor steps. This device senses each motor step completed, independent of the motor drive circuit which pulses the motor to "step" in 1.8 degree steps. The motor shaft is geared 605:1 to the output shaft; since each motor step is 1.8 degrees into this = 0.003 degrees. This provides both a convenient feedback signal if a position loop is to be closed around the motor and a high-resolution index of array shaft rotation in conjunction with a digital counter.

On the system designed for BSE a motor mounted magnetic reed switch is used giving four signals per rotation of the motor. It is not used for closed loop operation.

3.3.3.7 Design Features

Size	7" x 8" x 26"
Weight (as used on BSE)	22 lbs (includes attachment structure and torque tube)
Power Track (Syn)	1 - 2 watts
Slew	10 - 20 watts - 6°/min.
Position Readout	Quadrature Transducer (Magnetic Reed Switch - Motor Mounted)
Redundancy	2 drive (single shaft)
Type of Motor	1.8° Stepper Motor
Speed Reduction	100:1 Harmonic Drive + 6:1 Spur
Backdrive Protection	Wrap Spring Clutch
Tracking Rate	1 Rev/Day
Slew Rate @ 7.5 Slug Ft^2	6°/min
Temperature Range	20°F to 120°F
Torque Capacity	Static - 36 ft. lbs.
Inertia Load Capacity @ Slew Rate 70 pps	10 Slug ft^2
Type of Lubrication (as used on BSE)	Dry Lube - Molybdenum Disulphide Silver plate in wave generator
Power Transfer Capability	4 Power rings, 40 amps total 20 signal ring @ 1A ea.
Power Transfer Efficiency	Brush contact resistance .005 ohms max.
Noise	20 milliohms max.

3.3.4 TRW Systems Group

3.3.4.1 General

TRW have developed SAOPT mechanisms for NIMBUS, ERTS and FLTSATCOM missions and for COMSAT. All solar array drive mechanisms used on these programs have been designed to drive each solar array independently. The present status of these drives is as follows:

- 8 units flown on NIMBUS E & F } Identical Units
- 8 units flown on ERTS A & B }
- FLTSATCOM unit qualified for 76 launch
- COMSAT unit developed but not qualified - program cancelled.

The above units are shown in Figures 22, 23, 24 and 24(a).

From the data supplied by the TRW, it appears that none of the existing SAOPT drives can be used in "as-is" configurations. However, a hybrid drive (SADA) mechanism which combines the COMSAT motors with FLTSATCOM slip ring assembly could be considered a candidate drive for the UHF program. The following paragraphs will discuss in some detail this SAOPT mechanism.

3.3.4.2 Solar Array Drive Assembly (SADA) (Figure 25.0)

The Solar Array Drive Assembly (SADA) consists of two redundant pancake stepper motors driving into a harmonic drive. The harmonic drive output is connected to a through shaft which allows both solar arrays to be driven by one SADA. A redundant type disc slip ring assembly is used for power and signal transfer from the arrays to spacecraft. In addition, a redundant rotary potentiometer is used to indicate array position with respect to the spacecraft. A summary of the SADA characteristics is presented below:

SUMMARY OF SADA CHARACTERISTICS

Size :	7.8 in dia. x 9.2 in.
Weight :	13.3 lbs. without electronics and sensors
Power :	0.065 watts average @ 1 rev/day 9.8 watts, peak
Maximum Rate:	0.5 deg/sec
Step Size :	0.03 deg.
Output Torque:	41.0 ft-lb.
Backlash :	0.5 arc minute, maximum

5/CHR/56

NIMBUS/ERTS SOLAR ARRAY DRIVE

ROTATION:	CONTINUOUS @ 3.3 DEG/MIN
TORQUE:	600 IN-LB
SIZE:	6.0 IN X 7.0 IN X 10.0 IN
WEIGHT:	25 LB
POWER:	24 VDC @ 7.5 WATTS
SLIP RINGS:	16 RINGS @ 10A EACH

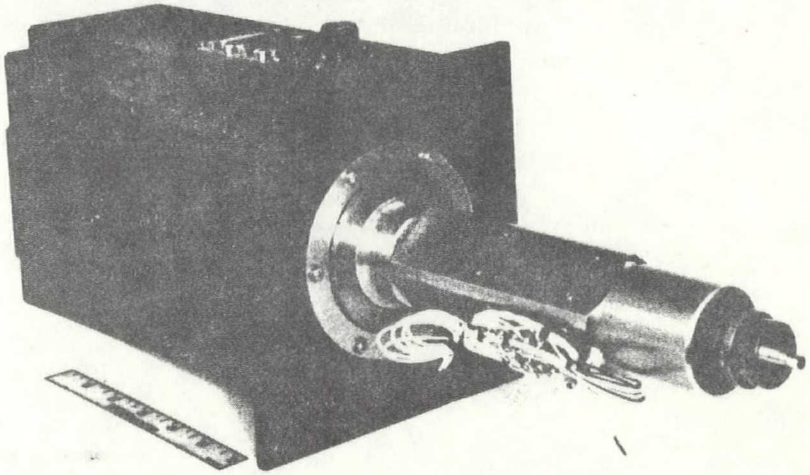

DESIGN FEATURES:

- COMPLETELY SEALED
- WABBLE GEAR FINAL REDUCTION
- SELF CONTAINED ELECTRONICS AND SUN SENSORS
- CAN OPERATE IN EITHER POSITION OR RATE MODE

DESIGN STATUS:

- QUALIFIED
- 4 UNITS FLOWN TO DATE ON NIMBUS E & F
  4 UNITS FLOWN TO DATE ON ERTS A & B

FIGURE 22.0

COMSAT SOLAR ARRAY DRIVE

ROTATION:	CONTINUOUS
TORQUE:	41.0 FT-LB
ANGULAR QUANTIZATION:	0.0375 DEG/STEP
SPEED:	0.8 DEG/SEC
SIZE:	6.3 IN DIA X 7.5 IN
WEIGHT:	9.7 LB
POWER:	28 VDC @ 9.0 WATTS - PEAK
SLIP RINGS:	6 RINGS @ 7.5 A EACH 12 RINGS @ 2.5 A EACH
ROTATIONAL COMPLIANCE:	80,000 FT-LB/RAD
LUBRICATION:	LABYRINTH SEAL & LOW VAPOR PRESSURE OIL
LOAD INERTIA:	UP TO 100 FT-LB-SEC^2

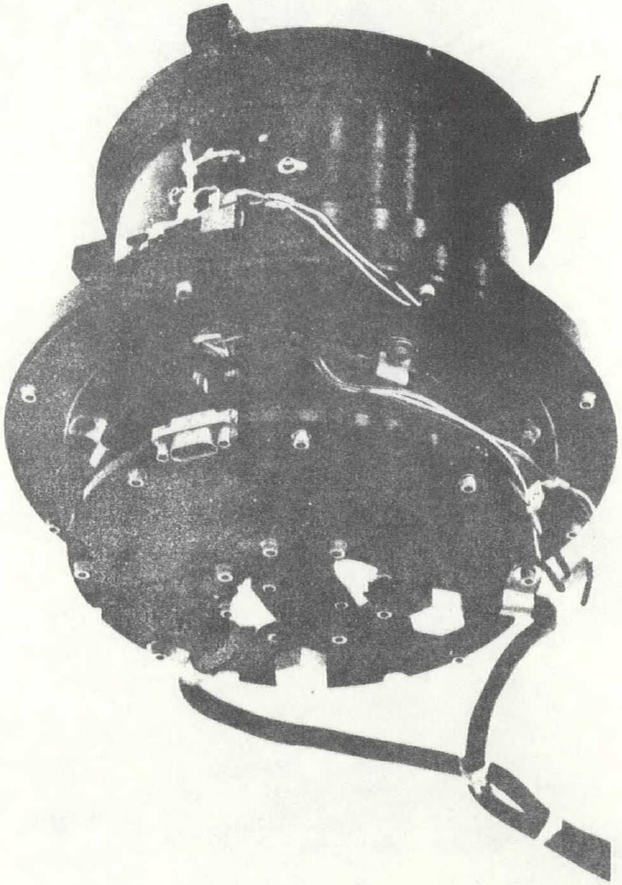

FIGURE 23.0

FLTSATCOM SOLAR ARRAY DRIVE

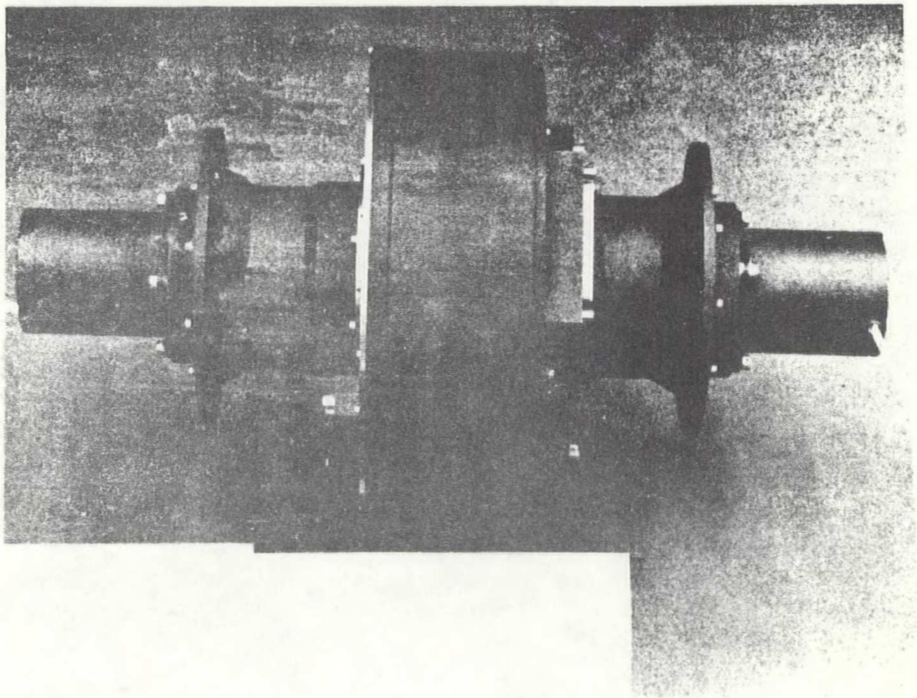

ROTATION: CONTINUOUS

TORQUE: 10.0 FT-LB

ANGULAR QUANTIZATION: 0.018 DEG/STEP

SPEED: 0.25 DEG/SEC

SIZE: 8.2 IN DIA X 14.8 IN

POWER: 28 VDC @ 5 WATTS PEAK

DESIGN LIFE: 7 YEARS IN ORBIT

DESIGN FEATURES:

- COMPLETELY REDUNDANT - NO SINGLE POINT FAILURE ELEMENTS
- HARMONIC DRIVE FINAL REDUCTION
- LABYRINTH SEAL WITH LOW VAPOR PRESSURE OIL
- POTENTIOMETERS FOR POSITION INDICATION
- STEPPER MOTOR PRIME MOVER

DESIGN STATUS:

- QUALIFIED
- SCHEDULED FOR LAUNCH IN '76

FIGURE 24.0

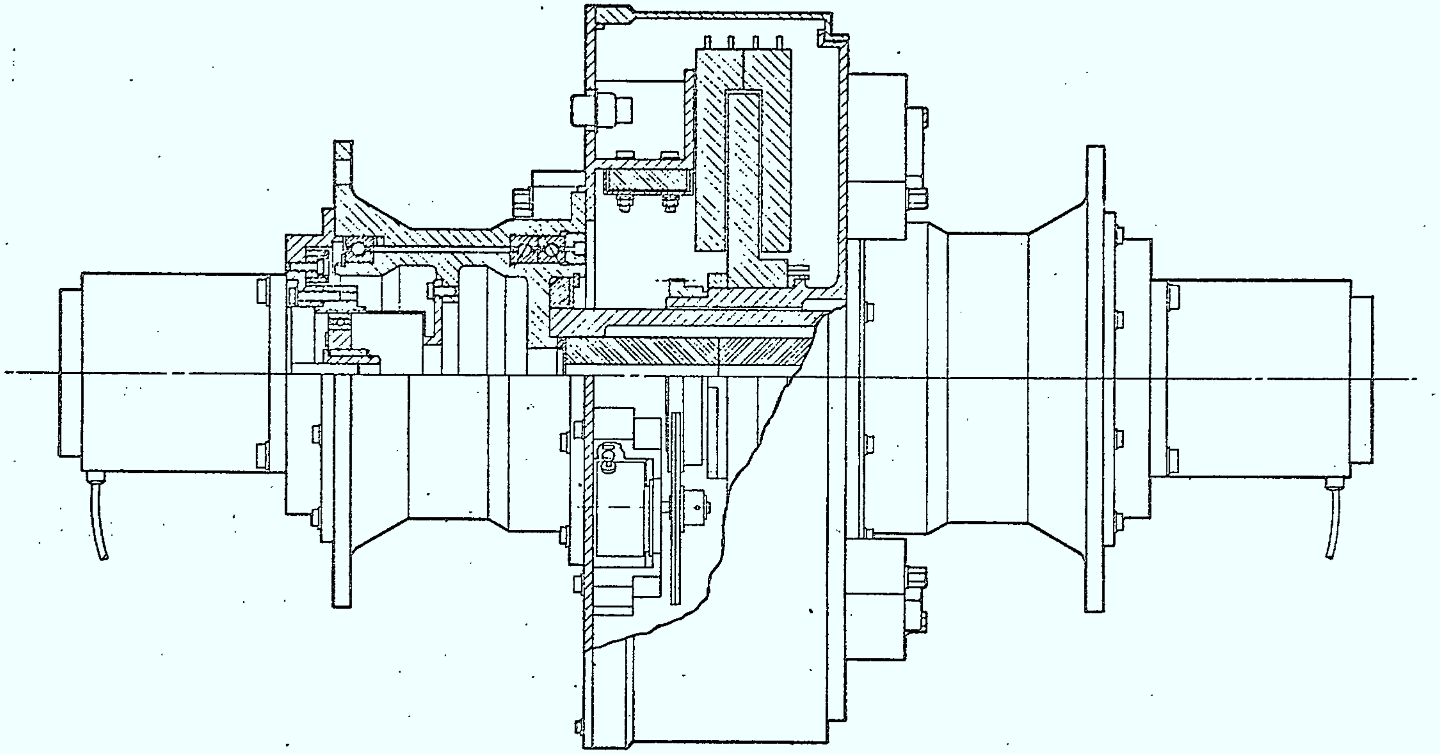

FLTSATCOM ARRAY DRIVE

FIGURE 24A

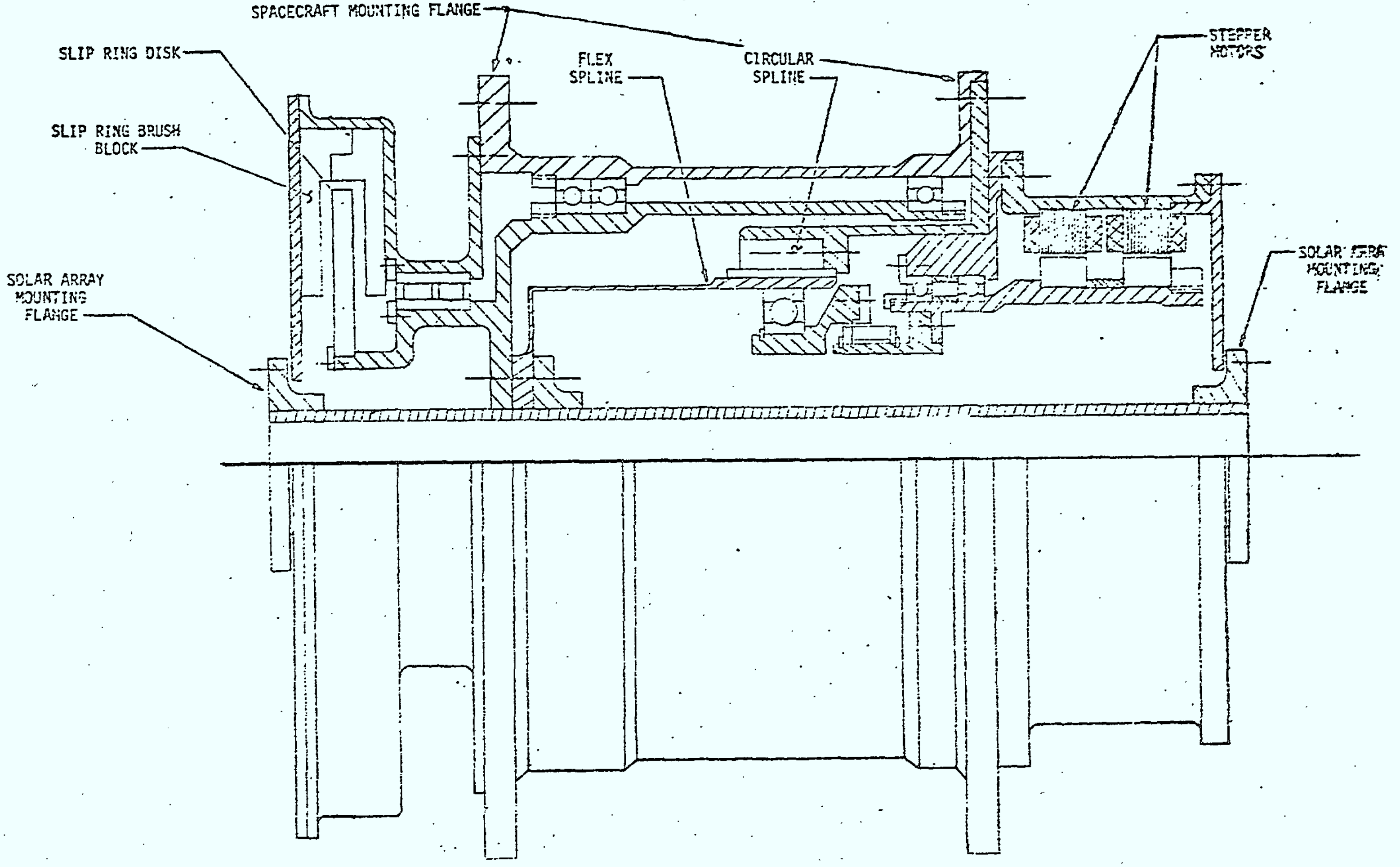

TRW ARRAY DRIVE

FIGURE 25.0

The basic geared stepper motor drive design is a modified version of a solar array drive currently being developed under TRW sponsorship. The main difference is the use of an external slip ring assembly to accommodate the through shaft required for this application. The following features are incorporated into the SADA:

- 24 pole brushless DC torque motor operated in step mode at 7.5 degrees per step made by Scheaffer Magnetics, Inc.
- Wire-wound potentiometer with full redundancy.
- Titanium shafts, housing, motor support, and bearing support to provide minimum differential expansion between the bearings, housing, and shaft over the operating temperature range.
- Corrosion-resistant 440C steel bearings with porous phenolic retainers impregnated with NPT-4 oil.
- Duplex angular contact bearing pair for axial stiffness with dual Conrad deep groove stabilizer bearings on output shaft.
- Disc-type slip ring assembly with composition pad type brushes running on concentric rings; redundant brushes and rings.

3.3.4.2.1 Motor Assembly

The motor is a pancake type, 2-phase, 24-pole with three stator slots per pole. It is utilized as a stepping prime mover. Depending on the electrical drive scheme implemented, it can develop 7.5 or 3.75 degree displacement increments with a 45 inch-ounce torque for a center tapped winding configuration. The 7.5 degree step size is selected because it provides an adequately small displacement increment, and the power requirements are reduced. This component was previously used by TRW in conjunction with a precision star tracker gimbal design for NASA/Goddard Space Flight Center

(PPCS/PADS Star Tracker Assembly). Life testing conducted in a vacuum environment demonstrated this motor's performance. The motor successfully completed over 19,000,000 operational steps at 100 percent duty cycle which is approximately the number of steps, but 100 times the duty cycle, needed in this application. Since absolutely no motor degradation was observed upon completion of this test, its application for this program involves very little risk.

3.3.4.2.2 Harmonic Drive Subassembly

A harmonic drive gear train (Model 1M) has been selected for the SADA because of the unit's inherent geometric and stiffness characteristics as well as the experience gained at TRW in conjunction with the DSCS-II program. The proposed utilization of the harmonic drive in conjunction with a small increment-stepping motor and large torque capability eliminates the need for intermediate spur gear stages and resultant reliability degradation. Below is a summary of harmonic drive experience at TRW:

Development Status of TRW Stepper Motor/Harmonic Drive Actuator

Program	Status
Company Sponsored	Two Axis demonstration drive (using Slo-Syn motor and Harmonic drive)
777 Antenna Drive	Qualified and flown Load inertia: 1.5 Slug-ft^2 Rate: 0.12 deg/sec.
Classified-Antenna Drive	Breadboarded a single axis o Tested with load at required speed o Accelerated life test Load inertia: 50 Slug-ft^2 Rate: 0.2 deg/sec.

Classified-Antenna	Breadboarded a single axis drive with redundant winding stepper motor - tested with load at required speed Load inertia: 16 Slug-ft^2 Rate: 3.0 deg/sec.
Grasp/ABT (Company Sponsored)	Vela reaction wheel on 777 drive for air bearing table demonstration Wheel Weight: 20 lbs Rate: 4.0 deg/sec.
HEAO/GRASP (Company Sponsored)	Model 35 wheel on a Biax Drive Wheel Weight: 70 lbs Rate: 1.0 deg/sec
CAPISTRANO TEST (Company Sponsored)	Special Biax constructed for Antenna closed loop autotrack tests (9 ft dish) Load inertia: 25 Slug-ft^2 Rate: 0.2 deg/sec
FLTSATCOM-SOLAR ARRAY DRIVE	Qualified, will be flown in 1976 Load inertia: 45 Slug-ft^2 Rate: 0.25 Deg/sec
COMSAT-SOLAR ARRAY DRIVE	Developed through engineering model Phase Load inertia: 1.5 Slug-ft^2 Rate: 0.8 deg/sec

3.3.4.2.3 Main Bearings

The bearings which support the shaft consist of a duplex pair and a deep groove stabilizer bearing. Lubrication is provided by means of nylasint reservoirs impregnated with Bray NPT-4 lubricant plus porous phenolic retainers also impregnated with the lubricant.

3.3.4.2.4 Slip Ring Assembly

The slip ring assembly is a pancake-type unit with rings on both sides of the disc. Brushes are 85 percent silver, 12.5 percent MoS_2 and 2.5 percent graphite, which ride on gold plated rings. Redundancy is obtained by using two brushes per ring and two rings per circuit. Lubrication is provided by means of nylasint reservoirs impregnated with NPT-4 oil. Approximately 4.2 inches of disc face are required to implement 36 signal and 4 power rings (total capacity of 50 amperes).

3.3.4.2.5 Potentiometer

Redundant wire-wound potentiometers have been selected for the solar array drive angular position transducer; this selection (versus resolvers) is based on electronic simplicity and weight considerations. This unit, especially configured for this application, patterned after a device (manufactured by Bourns) which TRW has qualified for the Skylab program. The Skylab unit has passed a complete component qualification test, including hard vacuum exposure at low temperatures and a 10,000 cycle life test at room ambient.

3.3.5 Marconi (MSDS) and Hawker Siddeley

3.3.5.1 General

The European Space Research and Technology Centre (ESTEC) has sponsored a development program which included two competing Solar Paddle Drives produced to similar specifications by Hawker Siddeley Dynamics (HSD) and by Marconi Space and Defence Systems Ltd. (MSDS) in the U.K.

The designs were derived by a series of trade-offs aimed primarily at mechanism reliability and with only passing deference to structural constraints; both designs were aimed at an "optimized" mechanism and, in fact, although the initial design phase was strictly competitive, both HSD and MSDS arrived at very similar concepts (2 bearing, direct drive). These designs are shown in Figure 26.0 (HSD) and 27.0 (MSDS/1).

Following their initial design MSDS were given a redesign contract which adapted their design concept to the specific requirements of a particular spacecraft installation. A controlling requirement was that the length of the mechanism should not exceed 10 cm, about 1/3 that of the original design. The result, which is shown in Figure 3 (MSDS/2), was a significant improvement on the previous design and was chosen for further development.

The mechanism used on the Orbiting Test Satellite (OTS) will be one adapted by HSD from their original design. No information is available for this unit.

3.3.5.2 Description of Solar Paddle Drives

During the design studies of both HSD and MSDS two design considerations dictated the mechanical configuration chosen for the drive units.

The first was the requirement that the contributing loss of overall satellite pointing accuracy due to the motion of the paddle should not exceed 0.02°. This constraint dictates that the paddle should not step by more than 0.3°. This restriction can be met in a simple manner by a stepper motor driving the paddle through a gear reduction. However, this configuration introduces failure modes associated with the gearing and associated bearings and the second design consideration, that mechanism reliability was paramount and that sources of tribological failure were to be minimized, resulted in adoption of a two bearing, direct drive configuration with a pancake motor mounted directly on the shaft and driving in a pulsed mode.

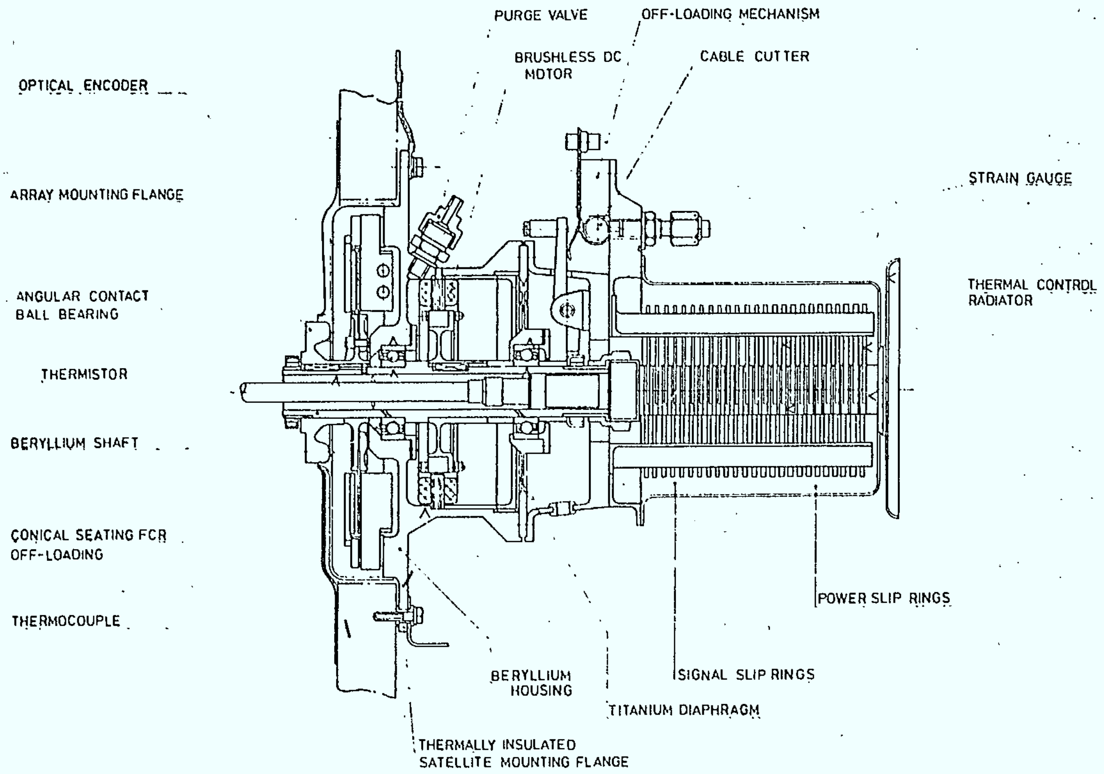

(A) HSD solar paddle drive.

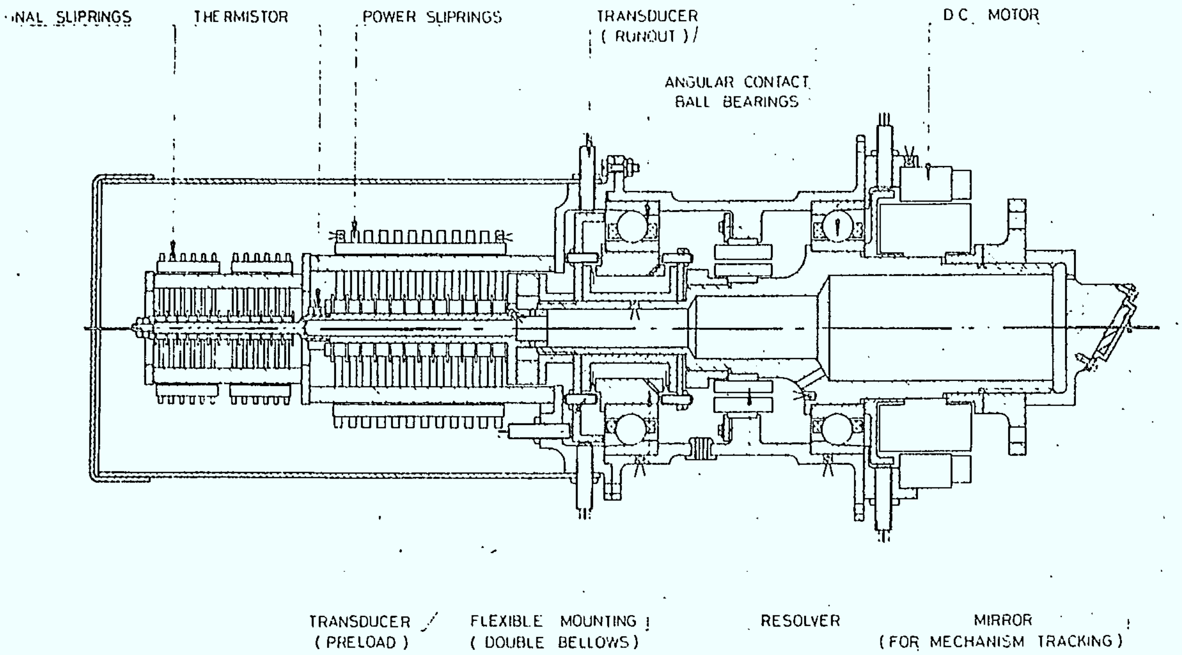

(B) MSDS solar paddle drive number 1.

FIGURE 26.0

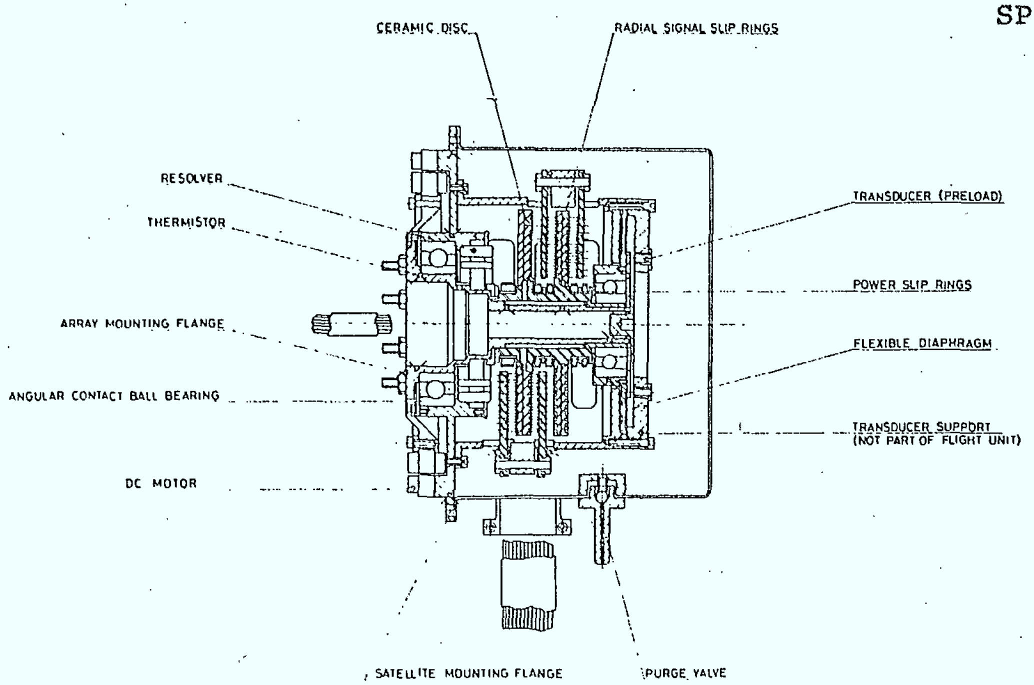

(A) MSDS solar paddle drive 2

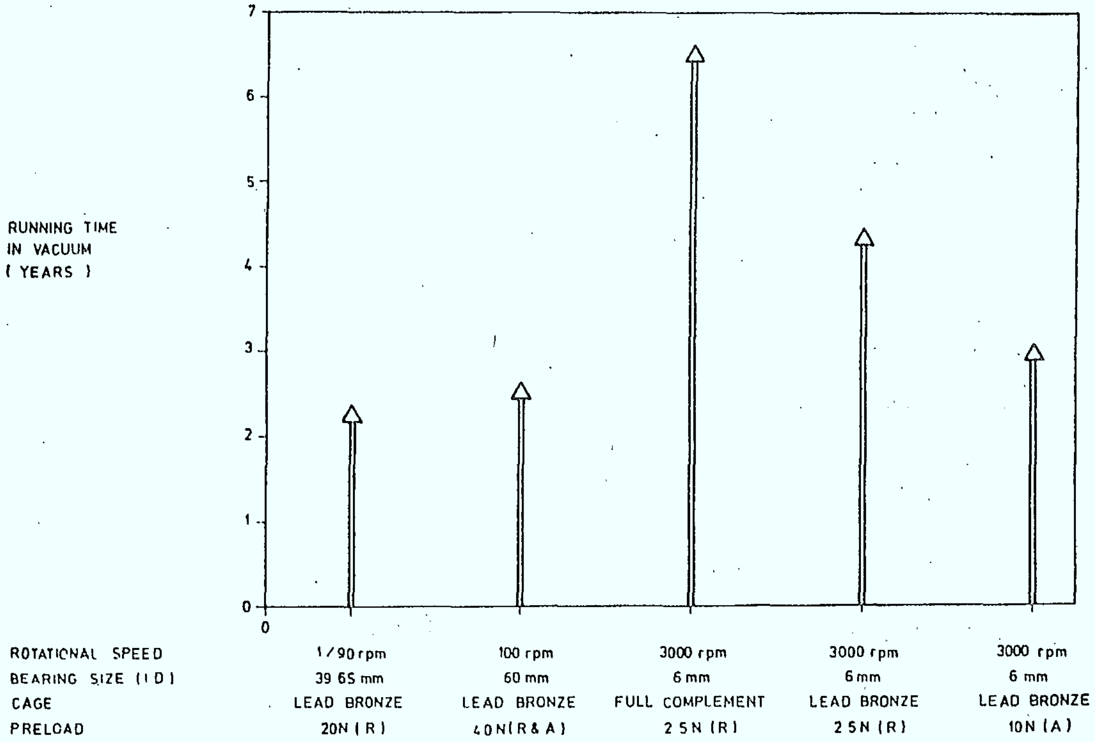

(B) Lifetimes achieved by lead lubricated bearings (all tests continuing)

FIGURE 27.0

The exact form of pulsed drive differs in the two mechanisms but in both the result is that, in normal operation, the array steps through about 0.1° every 20 seconds. If the mechanism fails to step, due to friction variation, the increasing error causes a progressively stronger motor pulse until the paddle continues its rotation. Obviously, a prime objective of the test program was to ensure the evenness of operation and to assess variability of positioning error.

3.3.5.3 Motors

The choice of motor differs in the two designs; HSD, true to the philosophy of minimizing wear surfaces, chose an Aeroflex Brushless DC motor, obtaining commutation and angular position information by means of an optical encoder referred to a read-only memory. MSDS, taking advantage of the limited member of revolutions required and the relative unimportance of wear life and wear debris, used a brushed Inland DC motor. The brushes of the motor were replaced with the Ag Cu MoS_2 composite used for the slip ring brushes.

3.3.5.4 Thermal Control

Differential thermal expansions caused by overall temperature variations and internal gradients are compensated in part by the use of lead lubricated angular contact bearings and by mounting one of the races on a flexible seating, axially compliant but radially stiff. MSDS, in their first design, (Figure 26(B) used a bellows mounting but changed to a steel diaphragm in their later design (Figure 27(A)) because of the length restriction. HSD used a titanium diaphragm.

Both mechanisms use slip rings as a means for transferring power and signals and utilize a combination of a silver (82.5%) copper (2.5%) MoS_2 (15%) brush in conjunction with a silver ring. The use of these materials is consistent with the common design philosophy of dry lubrication, obviating the need for close tolerance sealing and eliminating the failure modes associated with contamination, lubricant degradation and lubricant loss through creep or evaporation. HSD use a modular design, with the slip ring unit cantilevered off the inboard bearing while the larger number of signal channels required for the MSDS mechanism led to a radial configuration for the signal rings with axially mounted power rings. MSDS limit outgassing contamination with the use of a Lithium Aluminosilicate glass ceramic as an insulating mount for the slip rings.

3.3.5.5 Lubricant

The lead lubricant chosen for both designs has been under development by MSDS for some years sponsored both by the Royal Aircraft Establishment (U.K.) and by ESTEC.

This method of lubrication has now reached a level of environmental testing giving a high degree of confidence in its use in long life spacecraft mechanisms. Figure 27(B) gives a summary of some test experience at speeds of 1/90 rpm, 100 rpm and 3000 rpm. The longest ongoing tests at these speeds have reached operating lives of 2.5 years, 2.8 years and 7 years, respectively.

Most relevant to the solar paddle application are the 1/90 rpm (16 revs/day) tests where the longest running rig has completed over 15000 revolutions without failure in a vacuum of 10^{-8} to 10^{-9} torr. Each rig was subjected to at least 50 hours air running and vibration testing before the life test in simulation of the pre-orbit environment. Unlike the liquid lubricants, where failure can be quite independent of the revolutions achieved, the concept of accelerated testing can, with care, be applied to solid lubricants. For example, the table below demonstrates the consistency of test results with accelerated operation. As an indication of torque noise, counts were made of the number of times the torque exceeded a certain level.

Variation of Torque Performance with Speed of 1/90 rpm Test Rig Bearings (20N Preload, Average Coefficient of Friction = 0.002)

Speed (rpm)	Average Torque (Nm)	Frequency of Peak Torque Levels (Counts/sec) 0.0011 Nm	0.0014 Nm	0.0017 Nm	0.0021 Nm	0.0023 Nm
1/90	0.00043	2.6	0.6	0.18	0.02	0.02
1/9	0.00040	2.1	0.5	0.10	0.04	0.00
1	0.00045	2.5	0.5	0.10	0.01	0.00

3.3.5.6 Characteristics of Solar Paddle Drivers

CHARACTERISTIC	HSD MECHANISM	MSDS MECHANISM
Operational Speed	1 rev/day	1 rev/day
Acquisition Speed	1 deg/sec	0.5 to 2 deg/sec depends on array size
Tracking Accuracy	± 2.5 deg	± 0.5 deg
Typical Step Size	0.1 deg	0.1 deg
Shaft Resolution	0.1 deg	0.1 deg
Av. Friction	0.07 Nm	0.46 Nm
Torque (estimated)		
Torque Margin	17:1	2.4:1
Power Required (not including control)	0.5 W average 10 W peak	0.5 W average 10 W peak
Slip Rings	36 Signal rings	40 Signal rings - Radial Disc (Pancake) composite Brushes

	6 Power rings (460 W) 1 Ground Ring	5 Power rings - Silver Tracks on Glass Ceramics (500 W) 1 Ground Ring
Envelope	25cm dia x 30 cm	20cm dia x 10.5 cm loop
Weight	4.2 kg	3 kg
Development and Qualification History	Not known	3 Mechanisms developed for ESTEC currently on long life vacuum testing. Each mechanism successfully completed acceptance and qualification level vibration tests in accordance with the Delta 3914 specification. Each Mechanism subjected to thermal cycling between -25°C and +80°C. Two mechanisms have completed accelerated life tests equivalent to greater than 10 years accelerated test speed being 1 rev/hr. Third mechanism has commenced real time testing at 1 rev/ per day.
Bearing Lubrication	Lead Film	Lead film
Slip Ring Noise	Not Known	Signal - less than 1mV/amp Power - less than 1m V/amp

5/CHR/65

Drive Motor	Direct Drive DC Brushless Torque Motor	Direct drive DC Brush type torque Motor
Drive Capability Relative to Array Mass and Inertia	Not Known	Tested with a 30kg, 18kgm^2 simulated array. Capable of driving bigger array
Positional Read Out Accuracy	Not Known	±1 minute of arc
Areas of Redundancy	Slip Rings. Motor can be with mass increase	All slip rings. Motor can be with mass increase.
Design Temperature Range	Not Known	-40°C to +80°C

3.3.6 Lockheed Missiles and Space Co. (LMSC)

Data obtained from LMSC has been very little. This may be mainly because Lockheed have flown only one type of single ended SAOPT drive on classified projects. When questioned as to the flight history of these drives, they were even reluctant to reveal that the "longest" flight was 27 months.

The second single ended solar array drive mechanism is ready to start qualification testing. Without any doubt, this drive is the same that Scheaffer Magnetics supplied to the "un-named" customer (see drive description in Section 3.3.2.2). Lockheed have added to the SMI drive a slip ring assembly, sensors and redundant electronics and the whole assembly is shown in the Figure 28.

Both SAOPT mechanisms are of the single ended type, i.e. each array is individually driven.

The No. 1 mechanism is unique since it has two sets of electronics on the array side, which means that its electronic packages are rotating with respect to the S/C. Because of this arrangement it is not adaptable for a through drive system.

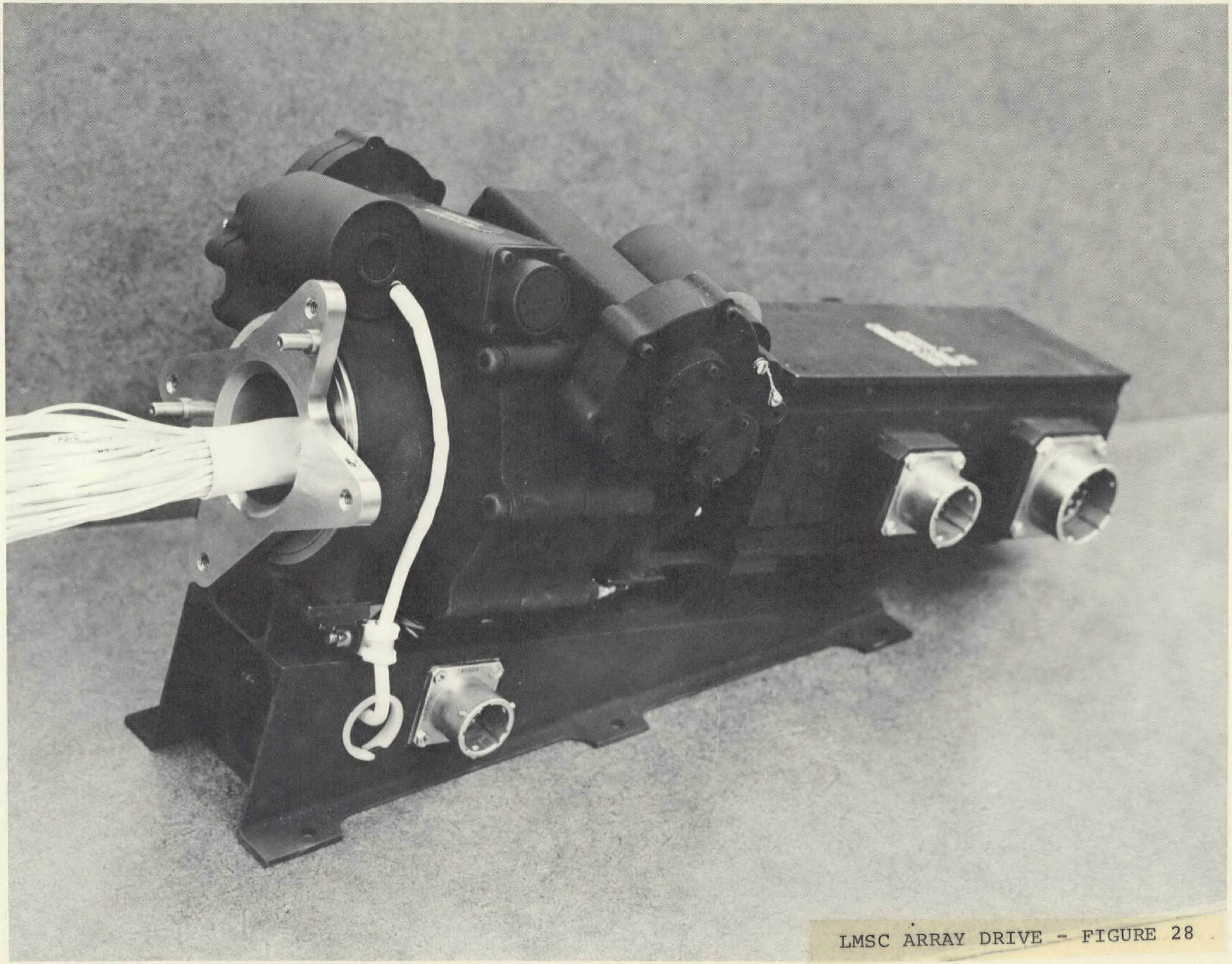

LMSC ARRAY DRIVE - FIGURE 28

The second drive (SMI) would require modest modifications in addition to a new slip ring assembly if adopted on the UHF project as a through drive driving both arrays simultaneously. The table below summarizes the LMSC drives.

LOCKHEED ARRAY DRIVES/ELECTRONICS

DESCRIPTION	MOTOR	GEARS	ELECTRONICS	NOTES
Single axis, unidirectional drive solar array 1 slug/ft^2, 24-in-lbs, 0.5 ±2 rev/deg/tracking, max. 72°/min	Size 11, 90° PM stepper two motors/unit	Worm drive plus differential for redundancy, 3600:1	Provides 0.5 amps pulses to 4 pole stepper motor to position array perpendicular to sun-based on output from array mounted sun sensor Redundant electronics	Contains circuitry to automatically position array perpendicular to sun within 5 minutes after array deployment. 15 units built. 14 lbs total
Single-axis Bi-directional drives array 14 Slug/ft^2 24 in-lbs, max	Size 15, 90° PM stepper two motors/unit	Worm Drive plus differential for redundancy 3600:1	Provides 0.5 amp pulses to rotate 4 pole stepper motor, 2 revolutions upon receiving command Redundant electronics	Seven unit schedule to be built. Qualify by early 1975 Wt. 13.8 lb.

3.3.7 Spar Aerospace Products Ltd.

3.3.7.1 General

For the past twelve years, Spar Aerospace Products Ltd. has been a major contributor to U.S. and Canadian Space Programs, supplying S/C antennas, actuators and booms. Some of the noteworthy programs are Mercury, Gemini, Apollo, DODGE, ATS, Alouette, Isis, CTS and many others.

In addition to the experience in space hardware discussed above, Spar has directly applicable experience in the area of solar array tracking and drive studies, analysis and hardware fabrication and test. These have been gained over the last 2 1/2 years in work conducted for the Lockheed Missile and Space Company, Sunnyvale, California on the Lockheed design for Intelsat V and on the Canadian Communications Technology Satellite to be launched in 1975.

In the area of the LCS hardware, Spar conducted trade-offs and analyses for a tracking and drive system to position a 7 KW two-panel solar array system. These studies involved a review and analysis of torquer/resolver characteristics as they applied to rate control and pointing accuracy of the satellite due to dynamic disturbances imparted to the satellite attitude control system as the array was rotated. Also further trade studies were conducted for the Early Version Intelsat V spacecraft. A stepper motor driven model was built by Spar and life tested by Lockheed.

On the Communications Technology Satellite (CTS), computer programs were developed at Spar to analyze the dynamic effects of a stepper motor drive system on array dynamics with a logical extension to Spar's already established work on flexible body dynamics, providing a good picture of the overall effect on satellite pointing accuracy. The CTS SAOPT system is designed to operate each array individually however, it could be redesigned to a doubled ended mechanism by adding a torque tube and a new slip ring assembly. The CTS SAOPT system has been qualified and is presently undergoing thermal vacuum life testing.

3.3.7.2 Design Description of the CTS Drive

Available space on the CTS satellite and a low allowable installed weight had a strong influence on the design of the unit. These constraints have resulted in a compact, pancake-shaped unit in which the components are mounted in a concentric rather than axial configuration. The central component is a Poly Scientific slip ring assembly.

The drive mechanism is shown in Figure 29.0. The main component of the SAOPT drive are:

- Actuator turntable
- Single bearing support
- Dual winding 1.8° stepper motor
- Encoder
- Slip ring assembly

The following sections will describe in detail the drive mechanism.

3.3.7.2.1 Bearing Arrangement

The single main bearing is a feature of the unit and offers the simplest and lightest coaxial configuration, consistent with CTS reliability requirements. A particular advantage of this configuration compared with dual bearing arrangements, is that the bearing housing design does not have to take temperature effects into account, that is there is no need for temperature compensating devices.

The bearing is a Conrad 4 point, contact ball-type with a viscous VacKote impregnated retainer. An adjacent annular reservoir mounted on the inner baseplate acts as a secondary source of lubrication.

The reservoir is formed from a sintered and pressed polyamide material (porosity 18% by volume) vacuum impregnated with viscous VacKote. Loss of lubricant is reduced by venting the bearing/reservoir area through a labyrinth seal.

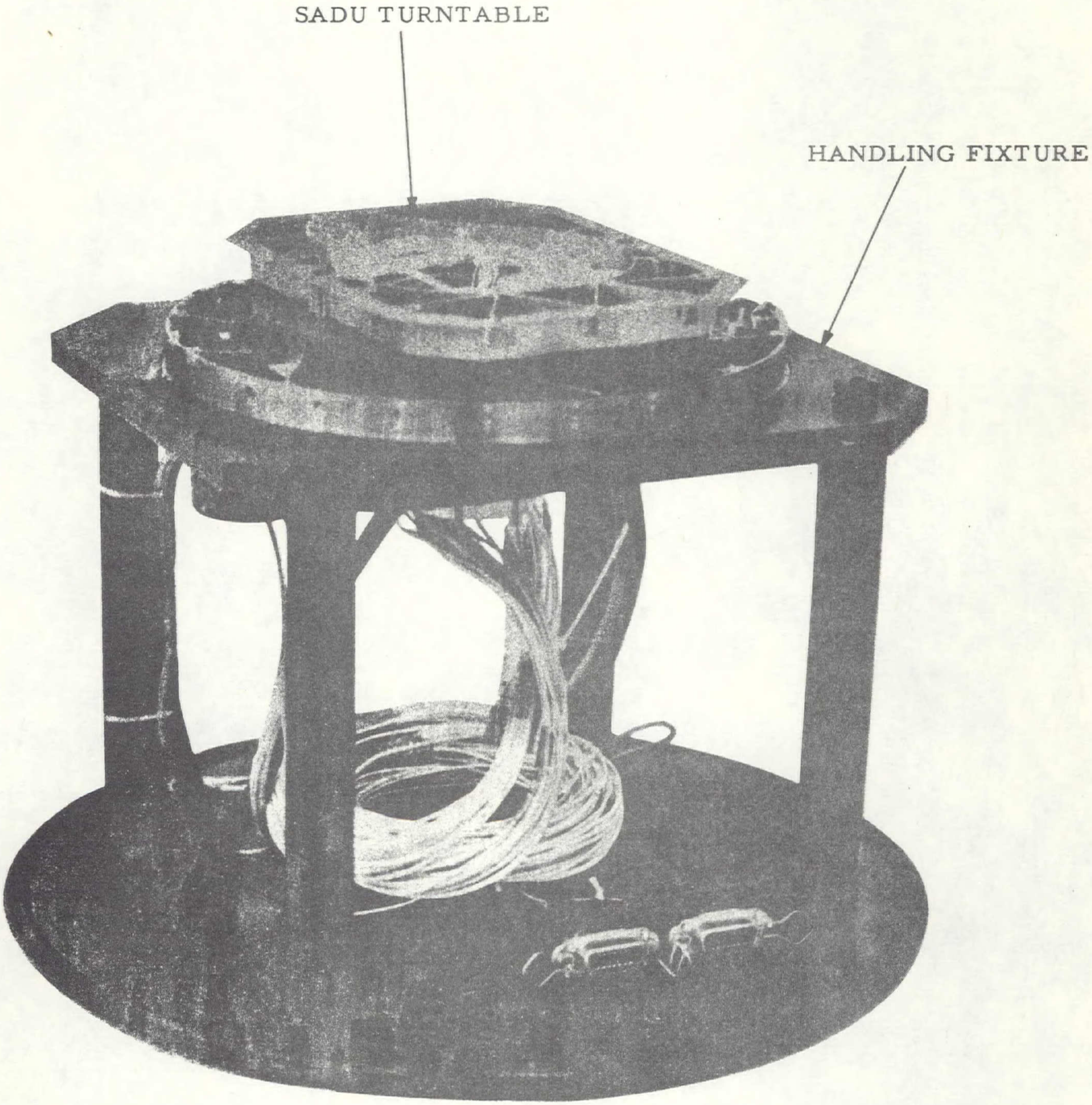

CTS SADU
(ON HANDLING FIXTURE)

FIGURE 29.0

3.3.7.2.2 Drive Motor and Gear Train

The drive motor mounted on the outer baseplate is a Singer-Kearfott Step-Sync-type permanent magnet stepper motor. This motor has redundant bifilar (inter-wound) field windings. In operation, only one of the redundant set of field coils are energized at a time, the redundant set being energized in the event of a failure of the primary set of coils or their drive circuits. In the event of a switchover the failed set is removed from the circuit.

The motor is operated in a two-phase unipolar drive mode and has four phases per winding. The stepping angle is 1.8° and the maximum permitted stepping rate for this motor is 200 steps/sec. The motor has a peak torque output of 45 Oz-in. at 27.5 volts and a maximum load torque capability of 31.8 oz.in. The corresponding output torque of the turntable is 458 oz-in. The following table shows tracking rates and load inertia capability:

Array Inertia	1.65 slug ft^2
Normal Tracking Rate	0.25°/min.
Fast Slewing Rate	0.50°/sec.

A pinion on the motor gear meshes with the ring gear attached to the turntable. The gears are straight spurs and provide a 14.4:1 reduction. The gear set is dry film lubricated with Microseal 200-1. This lubricant was chosen on the basis of its known compatibility with viscous VacKote.

3.3.7.2.3 Encoder

The pinion gear of the encoder assembly also meshes with the turntable ring gear. This encoder facilitates ground control by monitoring array orientation relative to the spacecraft. The resolution is better than 0.125° with a read-out direct to telemetry; no signal conditioning is required. The encoder bearings are lubricated with viscous VacKote. The encoder pinion gear is also dry lubricated with Microseal 200-1.

3.3.7.2.4 Slip Rings

The slip ring assembly mounts on the inner baseplate. The periphery of this plate is threaded and screws into the outer baseplate, trapping the outer race of the single main drive bearing.

Each slip ring assembly has 49 rings, 16 of which are used for array power and 31 for instrumentation power and signals, with 2 spare. The rings are rated at 2 amps each. Each gold slip ring groove has two gold brushes and the slip ring assembly is viscous VacKoted.

3.3.7.2.5 Performance Specification

Rotation Rates

Normal Tracking	0.25°/min.
Slew Rate	0.25°/sec.
Array Inertia	1.65 slug ft^2

Operating Modes

Normal Tracking	Ground Command CW or CCW Rotation
Slew Mode	Automatic at Power Turn-on or by Ground Command
Step size	.125° per pulse
Array Pointing Accuracy	±1°
Array Shaft Position Detection	±0.058°
Drive Output Torque	458 oz-in.
Friction Torque	200 oz-in. max.
Power requirement, including electronics	5 watts normal, 15 watts Fast Slew
Input Voltages to Electronics	28 VDC ±15 VDC ±5 VDC
Sun Sensor	Single Axis ±20° coarse field ±1° fine field

Slip Rings/Assembly	
Material	Gold on Gold
No. of Array Power Rings	16
No. of Instrumentation Power and Signal Rings	31
Noise on Signal Rings	0.25 mV max.
Power Transmission	650 Watts each array
Operating Temperature Range	-10°C to +70°C
Design Operating Life	5 years - target 2 years - spec.
Weight	
Drive	7.34 lb. ea.
Electronics (redundant)	3.4 lbs.
Sensors	0.29 lb. ea.
Envelope Sizes	
Drive	9.5" Dia. x 4.75"
Electronics	7 1/2" x 5 1/2" x 4 1/2"
Sensors	1" x 2.25" x 2"
Reliability (including electronics)	0.941 (5 years) 0.9896 (2 years)

3.3.8 Bendix Corporation

3.3.8.1 General

The Bendix Corporation, Navigation and Control Division have developed a drive system (Figures 30, 31, 32) for Grumman Aerospace Corporation's ELMS program, which was cancelled just prior to qualification commencement. This SAOPT mechanism is a direct drive dual winding brushless DC torque drive designed to drive each array individually.

There is one qualification drive with associated drive electronics in existence.

One unique feature of this digital array drive control system is that it employs digital integrating techniques to produce a pulse-width modulated motor drive signal which is independent of rate. The system behaves as a position servo with the motor shaft capable of assuming one of 8192

5/CHR/73

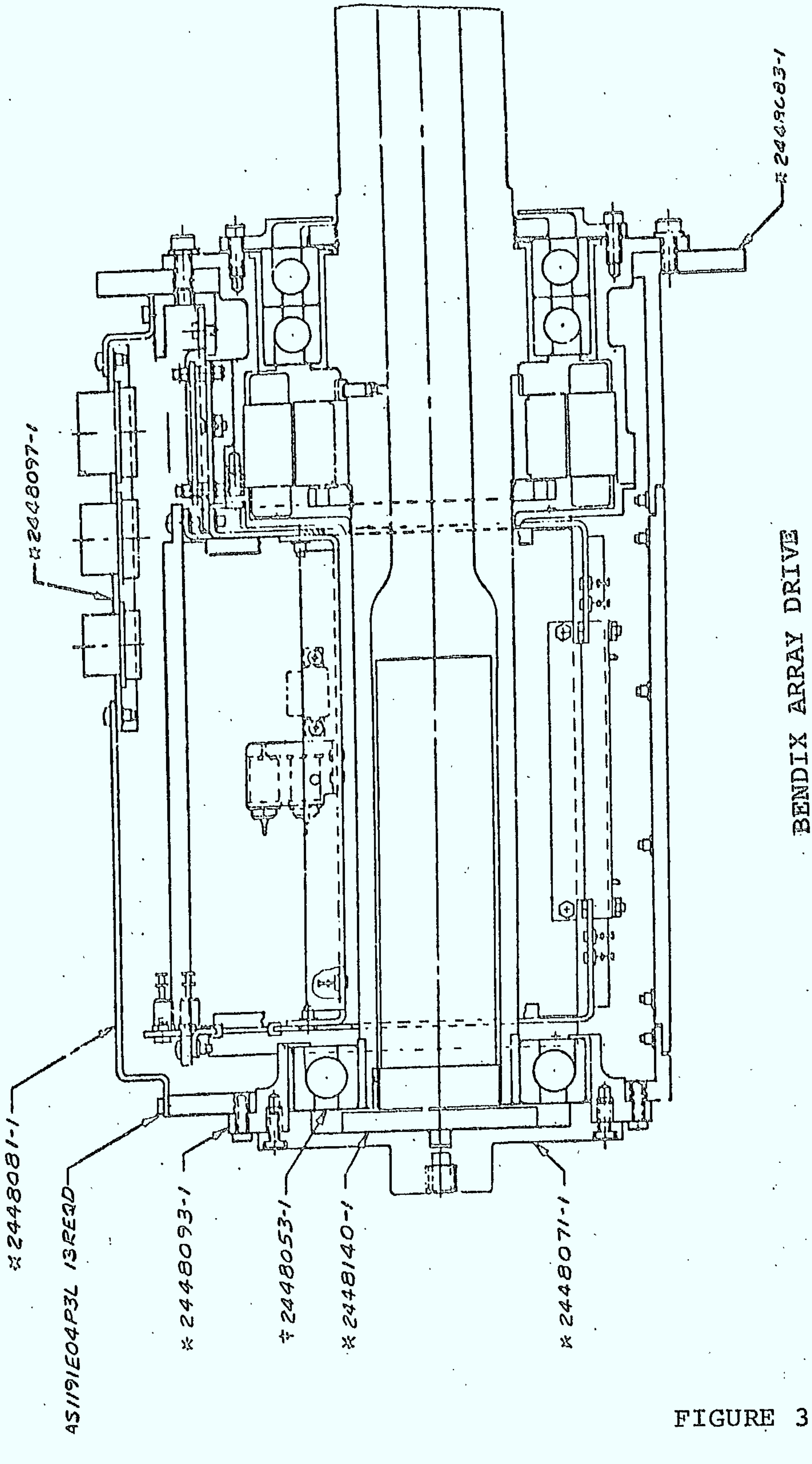

BENDIX ARRAY DRIVE

FIGURE 30.0

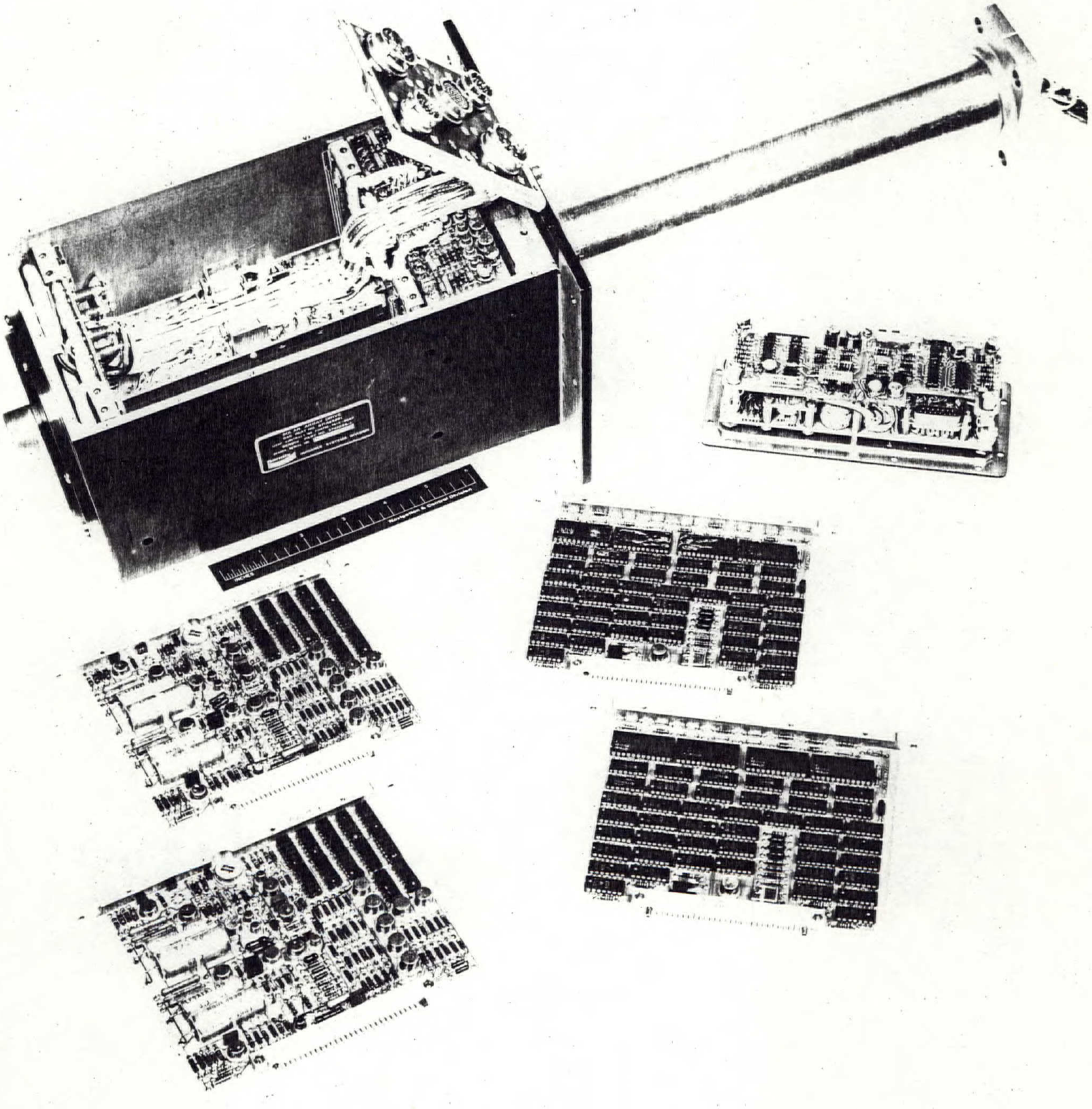

BENDIX ARRAY DRIVE ELECTRONICS

FIGURE 31.0

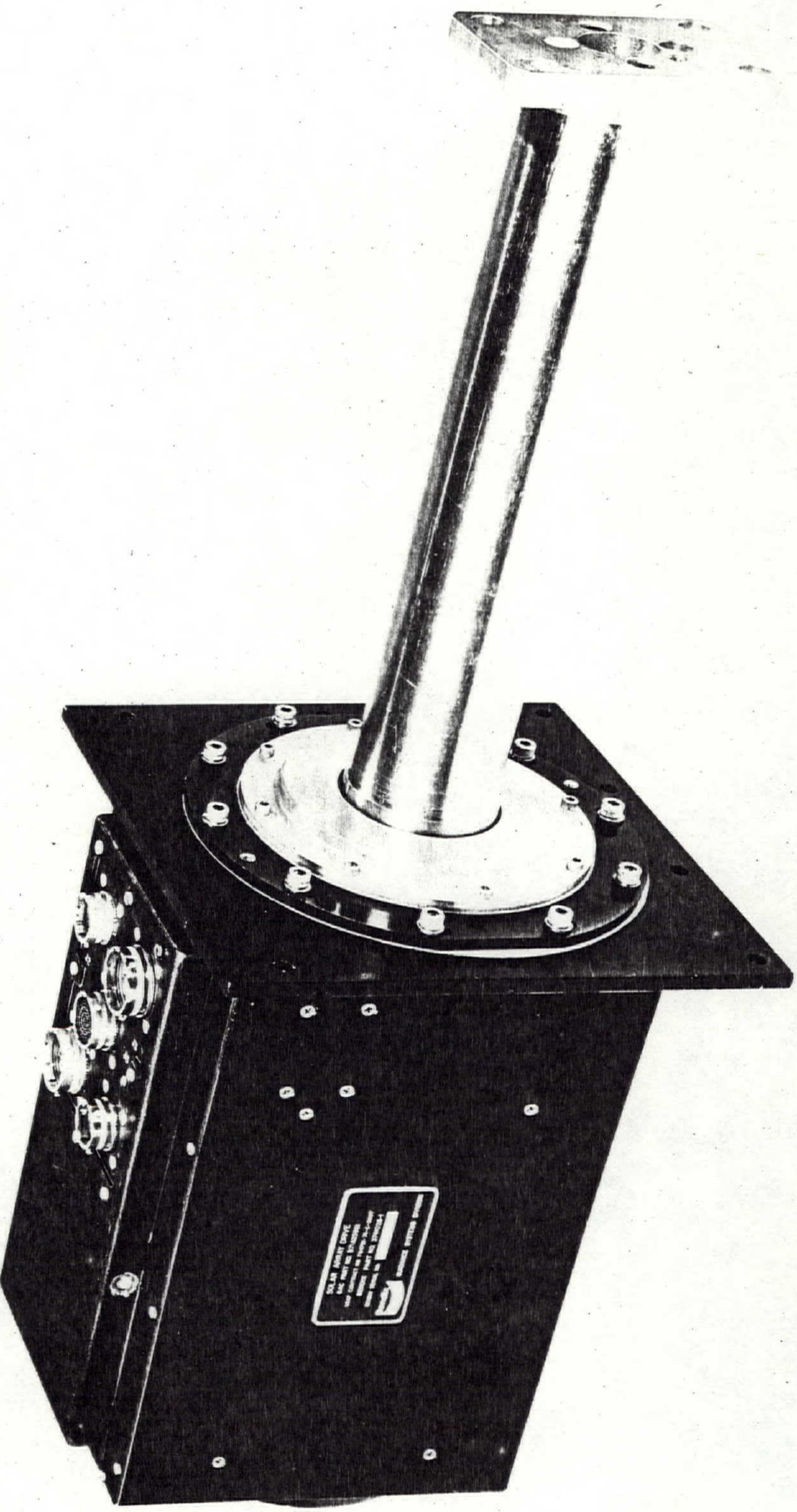

BENDIX DRIVE ASSEMBLY

FIGURE 32.0

distinct angular positions. The digital system is completely redundant and provides a backup manual mode in each channel under ground command. The backup feature does not comprise rate accuracies. Redundancy is extended to include input command telemetry.

3.3.8.2 Solar Array Drive Motor

The drive motor for the Solar Array is a low speed synchronous motor specifically designed for space application. It is the same type motor that has proven its reliability on the LEM Radar Rendezvous System, where it was employed as a low speed Brushless DC Torquer to drive the shaft antenna. In that application, the torquer was directly exposed to the space environment of high vacuum and temperature extremes (-275°F to 275°F). Based on its success in the LEM program, the synchronous motor for the Solar Array offers proven high reliability and subsequent long life.

The proposed synchronous motor consists of a 32-pole salient pole permanent magnet rotor which rotates within a two-phase 32 pole wound stator. Sine and cosine voltages applied to the stator windings will cause the stator field to rotate at:

$$N = \frac{120\ f}{P}\ \frac{\text{rev}}{\text{min}} = \frac{120\ (360)}{32}\ f\ \frac{\text{degrees}}{\text{minute}}$$

where f is the frequency of the sine and cosine voltages in hertz. The 32 pole rotor structure will synchronize to the slowly rotating field and develop torque in accordance with the following equation:

$$T = 100 \sin 16\beta \text{ oz-in}$$

where β is the mechanical lag angle of the rotor field relative to the stator field and 100 oz.in. is the maximum torque capacity of the motor. This power angle will vary to satisfy the torque requirements of the load and the maximum torque will occur when the lag angle β is 5.625 degrees. 5.625 mechanical degrees for a 32-pole rotor, (16 pole pairs), corresponds to 90 electrical degrees. Motor characteristics for the Solar Array synchronous motor are presented in the following table.

5/CHR/74

Solar Array Drive Motor Characteristics

Stator (2 Phase)	64 slots
Rotor	32 pole (salient): permanent magnet - full magnetization
Maximum Torque	100 oz-in.
Ripple Torque	
Major Frequency	64 Cycles/rev.
Cogging Torque	5.0 oz-in
Power at stall	6.8 watts
Motor size	O.D. 4.5" I.D. 2.0" Length 1.75"

3.3.9 RCA Astro

3.3.9.1 General

RCA have developed, for the three-axis stabilized SATCOM satellite, a single axis solar array drive actuator as shown in Figure 34.0. In this drive a directly coupled brushless torque motor rotates the solar array in a forward or reverse direction at one or more speeds against the friction torque of the bearings and brushes on the slip rings. A wet lubricant is used in the bearings and slip rings. The slip rings are of low-torque, gold-on-gold V-groove design.

A cross section of the RCA Satcom drive assembly is shown in Figure 33.0. Although not shown in detail this design uses redundant brushless torque motors and resolvers. The three-bearing support, comprising a duplex pair of angular contact bearings in a face-to-face configuration is preloaded to 250 lbs. The duplex pair reacts axial loads and provides precise location for the proper tracking of the slip ring wire brushes in their grooves. The third bearing, outboard of the slip ring assembly and mounted on the flexible beryllium-copper diaphragm, provides high radial stiffness with zero play, while permitting axial deflection due to the different thermal expansion rates of the housing and shaft. This diaphragm applies 100 lb preload to the trailer (third) bearing over the -5° to +45°C temperature range.

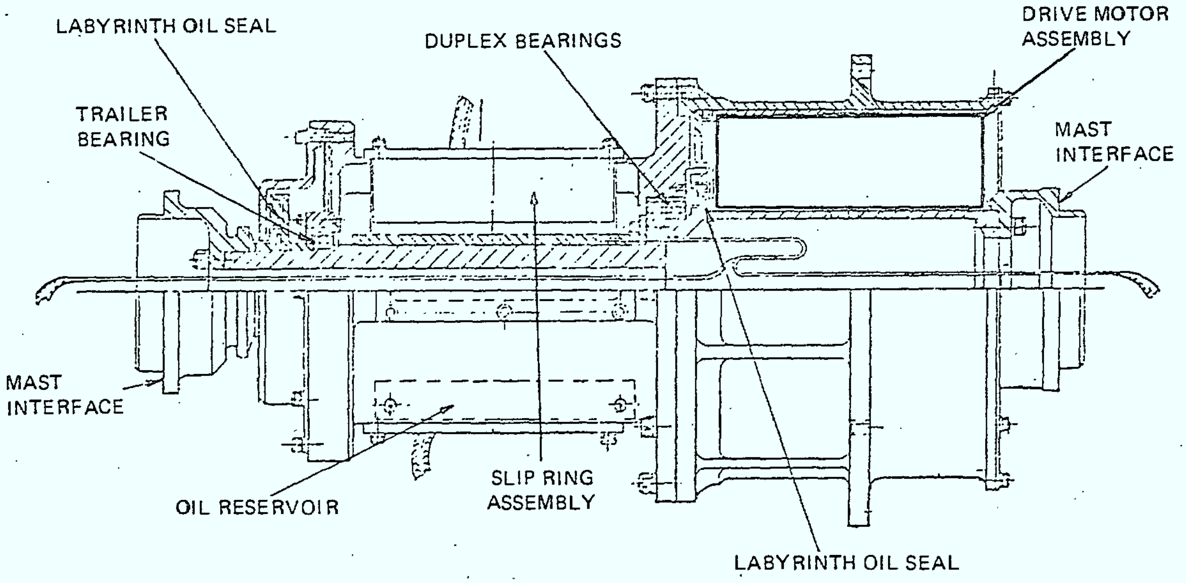

RCA Satcom Solar Array Drive, Cross-Section

FIGURE 33.0

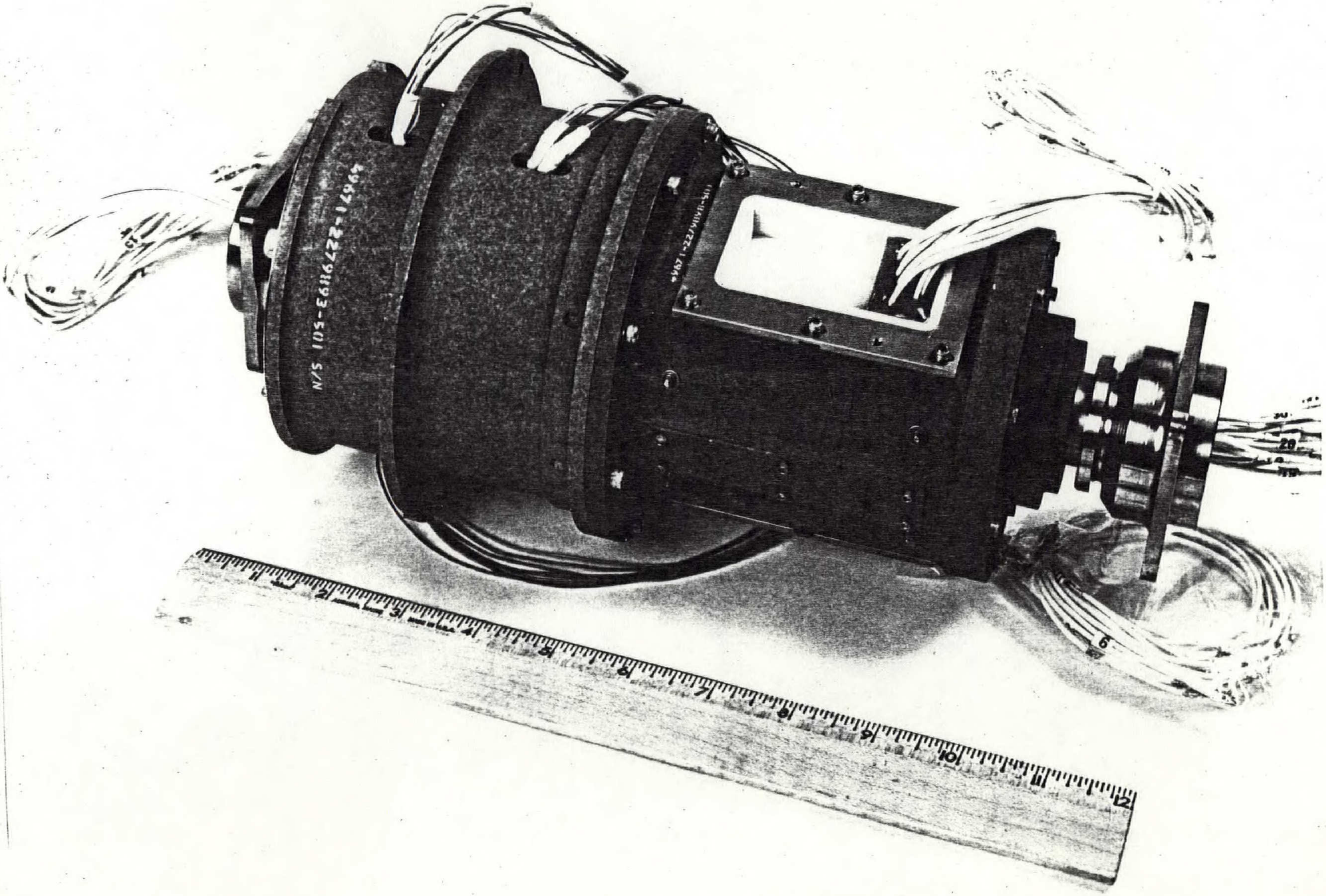

RCA ARRAY DRIVE

FIGURE 34.0

Th stators and rotors of the motor and resolvers are mounted to the housing and shaft respectively, axially clamped with a provision to adjust the resolver rotor with respect to the stators for critical commutation alignment. The two motors on the RCA Satcom array drive are mechanically aligned to minimize the cogging torque.

The motor is a 16-pole, 6-winding, brushless DC torque motor, designed for maximum efficiency and minimal torque losses. The configuration is "inside-out", with an external Alnico 9 permanent-magnet, shaped-pole rotor and internal wound stator on a stack of low-loss laminations. The rotor is overhung, and three fixed Hall-effect sensors are located 7 1/2° apart to sense the magnetic field of the overhung portion. These provide six discriminants, corresponding to the passage of the rotor poles N-S and S-N, which are used to determine the correct winding to be energized for positive or negative torques and to provide rectangular wave signals for speed and direction of rotation telemetry.

The following table gives a summary of the performance characteristics of the RCA SATCOM drive.

SOLAR ARRAY DRIVE PERFORMANCE SUMMARY

Parameter	RCA SATCOM Satellite
Array Speed (mrad/s):	
Fast, Normal, Slow	0.0727
Acquisition	1.963
Array Inertia ($kg.m^2$)	4.92
Slip Rings	
Power and Power Return	4 brushes 10 A rating 24 circuits
Control	2 brushes 2A brushes 7 circuits
Friction Torque (N.m)	0.07 - 0.14
Torque Jitter (N.m)	Not specified
Electrical Power (W)	
Normal	7.5
Acquisition	11.25
"Step" size (mrad)	2.454
"Step" rates (Hz)	
Fast, Normal, Slow	0.296
Acquisition	0.80
Mass (kg)	4.68
Size, dia x length (mm)	140 x 297
Reliability	0.973 for 8 years
Servo Bandwidth (Hz)	0.075

4.0 SUMMARY, CONCLUSIONS AND RECOMMENDATIONS

4.1 Summary

A total of eleven companies outside Spar were contacted during this survey. All, but Hughes Aircraft, Fairchild and Hawker Siddeley Dynamics responded and supplied information on their SAOPT mechanisms. However, not all companies disclosed technical data to the same extent, some supplied large amounts, while others supplied only small bits of information. This is quite understandable since some drives are used on classified projects, some are still under contracts, and in few cases, companies are considering design data proprietary. Most information that has been obtained was given on the understanding that it would have restricted usage, and would be used for the purposes intended only.

All data obtained has been screened and a summary table has been prepared. This comparison table allows the reader to have a birds-eye view of all SAOPT mechanisms. On the bottom of the list of parameters a UHF adaptability factor column is shown. The intent of this is to give the reader a comparative idea on how adaptable each array drive system is for the UHF spacecraft. In some instances, due to the lack of detail information, these numbers are guesses and are based on inadequate data.

4.2 Conclusions

When analyzing the SAOPT mechanisms surveyed, it appears that there are many different routes that designers have followed. On closer examination, however, it can be seen that there are two main design avenues that have been followed in the past. In general terms, one solar array drive mechanism design route is the use of relatively high speed AC, DC and stepper motors driving the output shaft through some type of gearing. Thus, slow output speeds and relatively high torques are obtained in the drive mechanisms. The second SAOPT mechanism design group uses DC brushless or DC brush type torquers driving the output shafts

SOLAR ARRAY DRIVES — SUMMARY TABLE

COMPANY / PARAMETER	B.B.R.C.		S M I			GE	T R W			BENDIX GSD	LOCKHEED	MARCONI SDS	HAWKER SIDDLEY DYNAMICS	S P A R	R C A
	TYPE I	TYPE II	TYPE I	TYPE II	TYPE III		NIMBUS/ERTS	COMSAT	FLTSATCOM						
DRIVE COMMON INDIVIDUAL	DIRECT —	— DIRECT	— GEARS + DIFF. COUPLING	— HARMONIC OUTPUT	— HARMONIC DRIVE & GEARING	— HARMONIC DRIVE, GEARS & CLUTCH	— 1,000,000 GEARING RATIO	— HARMONIC OUTPUT	— HARMONIC OUTPUT	- DIRECT	- HIGH REDUCTION & DIFF. COUPLING	- DIRECT	- DIRECT	- SINGLE PASS SPUR	DIRECT —
MOTOR	BRUSH TORQUER	BRUSH TORQUER	90° P. M. Size 15	3.75° STEPPER	90° P.M. SIZE 15 STEPPER	1.8° PER PULSE STEPPER	AC SERVO	STEPPER	STEPPER 7.5°/STEP	BRUSHLESS TORQUER	SIZE 11 90°PM STEPPER	INLAND BRUSH TORQUER	BRUSHLESS TORQUER	1.8° STEPPER	BRUSHLESS TORQUER
ARRAY ADVANCE	.125°	.125°	0.025°/pulse	0.023° per pulse	0.025° per pulse	0.003° per pulse	1 rev. per day	0.0375° per step	0.018° per pulse	0.045°	0.025° per pulse	0.1° typical	0.1° typical	0.125° per step	.140° per step
DRIVE BACKLASH	NIL	NIL	0.1°	0.1°	0.1°	NA	NA	0.1°	0.1°	NIL	NA	NIL	NIL	0.06 DEG.	NIL
MAXIMUM TORQUE OR MARGIN	4 in lb each motor	12 in lb each motor	25 in lb each motor	75 in lb each motor	25 in lb each motor	430 in lb each motor	600 in lb	492 in lb each motor	120 in lb each motor	100 oz in	22.5 in lb	2.4:1	17:1	22.6 in lb	TORQUE MARGIN = 2
DETENT TORQUE	Very Low	10-20 oz in	Infinite	Very High	Very High	3 in lb	Very High	108 in lb	48 in lb	50 oz in	Infinite	4.1 in. lb.	0.62 in. lb.	12.5 in lb	NA (Very Low)
DRIVE POWER REQUIREMENT	Less than 1w average	Less than 1w average	Peek 16 watts Less than 1w tracking	NOT AVAILABLE	NOT AVAILABLE	0.3w average; 9.8w slew	NOT AVAILABLE	.35w normal; 9w slew	0.1w normal; 5w slew	22.5w	1w average; 16.5w slew	0.5w average; 10w slew	0.5w average; 10w slew	5w	7.5w average
AREAS OF REDUNDANCY	MOTORS AND ELECTRONICS	MOTORS AND ELECTRONICS	MOTORS AND REDUCTION GEARING	MOTORS	MOTORS AND BEARINGS	FULL FUNCTIONAL	ELECTRONICS	MOTORS AND SLIP RING	FULL FUNCTIONAL	DUAL WINDINGS & ELECTRONICS	MOTORS, GEARS ELECTRONICS	SLIP RINGS, NONE IN DRIVE	SLIP RINGS, NONE IN DRIVE	MOTOR WINDINGS, SLIP RINGS	MOTORS & RESOLVERS
SLIP RINGS - POWER	16 at 3.0A ea	4 at 10A ea.	NIL	NIL	NIL	4 at 10.0A each	16 at 10A each	6 at 7.5A each	4 at 30A each	6 (22 amp total)	14 at 9A each	5 (500 watts)	6 (460 watts)	29 at (500 watts)	24 at 10A each
-SIGNAL	30 at 0.3A ea	30 at 0.1 Aea.	NIL	NIL	NIL	20 at 1.0A each	NA	12 at 2.5A each	36 at 1.0A each	14 1 Amp each	38 at 1A each	40	36	20	7 at 7A each
DES. TEMPERATURE RANGE	NA	-30C to +70C	-20F to +160F	-20°F to 160°F	-20°F to 160°F	20°F to 120°F	NA	NA	-20°F to +140°F	-30°F to +155°F	0°F to 145°F	-25°C to +60°C	-25°C to +60°C	-13°F to +149°F	-5°C to 45°C
LUBRICATION	VAC-KOTE LIQUID	VAC-KOTE DRY	KRYTOX	OPTIONAL	OPTIONAL	KRYTOX & METALLIC FILM	HERMETIC SEALING	BRAY NPT-4 VISCOUS	BRAY NPT-4 VISCOUS	NA	F50 & G300	LEAD FILM (BEARINGS)	LEAD FILM (BEARINGS)	VAC-KOTE VISCOUS	VAC-KOTE VISCOUS
WEIGHT	8 lbs less electr.	9.5 lbs less electr.	10.5 lbs drive only	8.6 lbs	NA	22 lbs including mounting brackets, less electronics	25 lbs including electronics	9.7 lbs drive only	15 lbs without electronics	22 lbs complete	14 lbs with electronics	6.6 lbs (drive)	7.0 lbs (drive)	7.34 lbs drive only	10.3 lbs drive only
LOAD INERTIA	0.5 slug ft^2	2 slug ft^2	14 slug ft^2	14 slug ft^2	14 slug ft^2	10 slug ft^2	NA	1.5 slug ft^2	45 slug ft^2	65 slug ft^2	1 slug ft^2	Tested with 13.3 slug ft.^{2}	NA	2 slug ft^2	3.6 slug ft.^{2}
DESIGN LIFE	3 years +	5 years +	5 years +	5 years+	5 years+	10 years	27 months	7 years	7 years	3 years	3 years	5 years	NA	5 years	7-10 years
FLIGHT STATUS	FLOWN	QUALIFIED	IN QUALIFICATION	DESIGN	DESIGN	IN QUALIFICATION	FLOWN 8 MISSIONS	ENGINEERING MODEL	QUALIFIED FOR 76 LAUNCH	PARTIALLY QUALIFIED	LONGEST FLIGHT 27 MONTHS	QUALIFIED	DEVELOPMENT	QUALIFIED	QUALIFIED
UHF PROJECT ADAPTABILITY FACTOR 0 - not usable 10 - can be used 'as is'	3	6	8	8	8	9	3	7	6	4	2	9	3	8	6

directly without the use of any gearing. To date, nobody on record, has used a direct drive stepper motor, mainly due to the difficulty of obtaining very small stepping angles (less than 1/8 of degree) at reasonably high torque levels.

As usual, either group of the solar array drives has unique advantages and disadvantages. The following table summarizes the main features of the first mechanism group which uses gearing to drive the output shafts:

Disadvantages	Advantages
- presence of gearing, additional bearings, or harmonic drive	- low output rotational speeds or stepping increments
- unless tandem motors are used motor redundancy requires some clutching differential or other engagement mechanism	- high output torque - high power off holding or detent torques
- small backlash	- low average power consumption - low weight - open loop operation with stepping motors - no resolvers, encoders or other position sensor are needed for motor control. Sun sensors are adequate to close the loop, for the acquisition made, and if desired for normal tracking too.

The second group of mechanisms or the direct drives are being used on recent space programs such as GPS, OTS and SATCOM. The following list summarizes the pros and cons of this type of the solar array drive mechanism.

Disadvantages	Advantages
- low output torques resulting in low torque margins	- very simple drive mechanisms without any gears, clutches, or additional bearings
- very low power off holding or detent torque	- two or more motor redundancy can be obtained by mounting motors armatures on the same shaft
- if used with brushless DC torquers, resolves or encoders are necessary	- may be easily adapted for through shaft or split drive applications
- jamming of one drive motor, will make the redundant motor inoperative	- no backlash

A direct drive system has only two possible forms of motor redundancy. Two torquers (B.B.R.C. Type I) are mounted side by side, and secondly, one motor stator (Bendix) has two independent windings. Stepper motor drives, on the other hand, have the same types of redundancies as above (SMI type II, Spar) in addition to differential (SMI type I), clutch (G.E.) and end-to-end (TRW FLTSCOM) redundant motor couplings.

4.3 Recommendations

Before choosing a most suitable SAOPT mechanism for the UHF project a detail trade-off study will be required between the direct drive brushless torquer and the geared stepper motor drives. During this effort special attention will be necessary to establish which of the two drive systems offers the highest reliability. In addition, careful analysis will be needed to find out what impact redundant motors will have on the drive system performance. In the absence of this trade-off, the writer of this report recommends the use of a simple geared stepper SAOPT drive mechanism. This drive mechanism recommendation is based on the following considerations:

- output shaft torque is very high, torque margins of 8 or higher can be efficiently achieved without the use of very heavy motors.
- array advance increments are extremely small and are in the 0.003 to 0.03 degrees per pulse range.
- with electrical power off the array is essentially locked, since stepper magnetic detent holding torque is magnified by the gearing ratio.
- added mechanical complexity due to harmonic speed reducer (5 parts) is off-set by the lack of resolvers or encoders and by relatively simple electronics in comparison with the brushless torque drive logic.
- the SAOPT can be operated in an open loop stable configuration from the S/C or ground station.
- average electrical power consumption is very low, since motor is operated only a small fraction of the total operational time.

Since most mechanical drive failures can be linked to lubrication failures, this area does require very careful investigation, especially if the SAOPT mechanism is expected to operate at 1 RPD for a period of 8 years. For this reason, regardless of the type of SAOPT selected, it is recommended here to provide the mechanism with dual or hybrid lubrication. This lubrication system is based on lubricating all gears and bearings with best available vacuum rated viscous oils; greases. Wiping lip seals and anticreep barrier must be provided at the output shaft of the drive to retain these lubricants within the drive. In addition, all surfaces requiring lubrication are coated with compatible space-proven dry lubricants based on plated low-shear strength metallic films or polymer based dry lubricating materials. The dry lubricant must provide a backup in the event of loss of liquid lubrication. The dry lube system alone must be capable of meeting the mission life requirement. It must be remembered, that true validity of the accelerated ground testing can only be verified when real-time flight test data is obtained. It is easy to accumulate and to exceed the total number of SAOPT mechanism revolutions at accelerated speeds, but this test method does not include real-time vacuum aging effects of the liquid lubricant. From another view point, it is the exposure to a high-vacuum space environment, not the hours of actual operation, which determines the life of the lubrication system.

If such a hybrid lubrication system is chosen, the choice of slip ring assembly between a metal brush and composite material brush device is simplified, the criteria necessary to be assessed being life history, test data and performance.