Research FOR FARMERS

WINTER — 1964

COUNTING CHROMOSOMES

CANADA DEPARTMENT OF AGRICULTURE

Research FOR FARMERS

CANADA DEPARTMENT OF AGRICULTURE
Ottawa, Ontario

HON. HARRY HAYS
Minister

S. C. BARRY
Deputy Minister

Vol. 9 No. 1

"*Research for Farmers*" is published quarterly by the Canada Department of Agriculture. Its purpose is to help keep extension workers informed of developments in research and experimentation as carried on by the various units of the Department.

Contributions should be addressed to the Secretary, Editorial Board, Information Division, Canada Department of Agriculture, Ottawa.

Cover Photo: **Dr. Roy L. Taylor, Plant Research Institute, Ottawa, counting chromosomes (inset) on root tips collected from plants grown in greenhouse. (See story p. 7.)**

NOTES AND COMMENTS

Pee Wee, Little Leaguer, and Junior—facetiously designated 'the baseball series'—are dwarf cabbage strains developed at the Experimental Farm, Morden, Man. All are considered to be useful economic types, writes Dr. Charles Walkof (p. 3). He reports that commercial seed growers will have an opportunity to obtain stock seed from Morden for multiplication and general distribution as soon as the three small-headed strains breed true. This will likely be within one or two years.

* * *

In their article, "How Important is the Seed We Sow?", (p. 4), researchers McFadden and Kaufmann, Lacombe Experimental Farm, state two interesting conclusions: one, you can increase barley yields and cut down on the amount of loose smut in your crop by using only large kernels from seed of any variety; the other, the source of seed or the environmental conditions under which it is grown can also affect yield. Their experiments and results divulge useful information.

* * *

The center-spread of this issue is devoted to developments in winter hardiness research. Dr. G. M. Weaver (p. 8) of the Harrow Research Station discusses current work in breeding winter-hardy peach varieties and comments on the electrical resistance method of measuring wood hardiness. Dr. J. Wilner (p. 9) of the Plant Research Institute, Ottawa, complements Weaver's experience by giving a short account of the simple device that has been developed for measuring winter hardiness in fruit trees.

* * *

Henri Généreux (p. 10), writing in French from the CDA Research Station, La Pocatière, Que., reports on results from studies made there on bacterial diseases of potatoes.

* * *

For years wet-belly disease in ranch-bred mink was thought to be due to faulty nutrition but present evidence, according to Dr. C. K. Gunn (p. 13), points to infection as the cause. Dr. Gunn, who is Director of the CDA Experimental Fur Ranch, Summerside, P.E.I., reports on his investigations and offers several control measures.

Heads of Pee Wee.

Plant of Little Leaguer compared with size of a baseball and a softball.

Above: Plant of Junior, same comparison as above.

Below: Second crop. Brussels-sprouts-type buds that grew on plant of variety Pee Wee after first head was harvested.

Dwarf Cabbage

Bred for Modern Needs

Charles Walkof

DWARF CABBAGE, a modern plant breeding innovation, has increased the popularity of this vegetable with the food shopper. The small heads from dwarf plants are preferred to the conventional, 8-10 lb. heads, particularly by the small family. This preference has been enhanced because several high quality, small-head-producing varieties and hybrids are now available to growers. The dwarf-size heads average 3 lb.

The development of dwarf or small-headed cabbage has been a part of the breeding program at the Morden Experimental Farm. A series of three dwarf strains has been produced, in which the heads are smaller than the 3 lb. commercial type, to provide for the limited quantities of cabbage often required for preparation of salads and cole slaw. Also, the miniature heads suggested new methods of cooking which could increase the palatability of the vegetable.

The three strains of dwarf cabbage selected at Morden range from ½ to 1½ lb. per head. They were selected from plants segregating for head size in the progeny of a three-way cross; Early Vienna × Golden Acre, standard type, crossed with Golden Acre No. 84. Dwarf plants were observed in the first cross but none had the extreme dwarfness found in plants from the second cross. One or two from the latter produced heads weighing about ¼ lb. These were the extreme type produced by the gene for small-head size.

As a rule, weight does not provide a good measure of cabbage-head size for a written or oral description. Therefore, it occurred to us that a comparison with well known objects of somewhat similar size such as a baseball and softball would be appropriate. The size likeness of a baseball in the strain weighing ½ lb. per head suggested the name Pee Wee, the strain having 1 lb. heads, comparable to softball size, was named Little Leaguer, and the strain with 1½ lb. heads, Junior. The three as a group were facetiously designated 'the baseball series' of dwarf cabbage strains. All are considered to be useful economic types.

In our experiments, we found that the three small-headed strains have good quality. Heads are firm and hard when ready for use. The core or hard base of the heads to which the leaves are attached is small—a preferred characteristic. The leaves are fine textured. The flavor is highly rated when the small heads are used raw in salads or when cooked.

Normally, cabbage intended for boiling is cut or shredded first. In our opinion, the aroma or bouquet of the vegetable, the delightful part of cooked cabbage, is dissipated in this way. One of the reasons that Brussels sprouts are popular is that the litle heads are cooked and served whole and therefore the delicate, aromatic flavor is retained until they are consumed. The dwarf cabbage heads can be treated in the same manner as sprouts and in flavor tests have been more pleasant for eating when cooked whole rather than cut.

When the heads of early cabbage are harvested there is sufficient time during the growing season for adventitious buds or little heads to develop on the stumps of the plants. From 3 to 5 such buds may form and produce useful

Concluded on page 15

Dr. Walkof is a vegetable crops specialist with the CDA Experimental Farm, Morden, Man.

Large seeds carry less loose smut than small seeds.

How Important Is The Seed We Sow?

A. D. McFadden AND *M. L. Kaufmann*

You can increase barley yields and cut down on the amount of loose smut in your crop by using only large kernels from seed of any variety. The source of seed or the environmental conditions under which it is grown can also affect yield. These are the conclusions reached after several years of research at the Experimental Farm, Lacombe, Alta.

Seed Size and Growth

Initial experiments beginning in 1957 were designed to study the influence of seed size on the growth of barley plants when they were space planted in greenhouse beds or field nurseries. From the results obtained, we showed conclusively that plants from large seeds were much more vigorous and produced more root and top growth than those from small seeds. More tillers and more seeds per head were produced from the plants from large seeds. This suggested that the greater amount of nutrients present in large seeds permitted the seedlings to get off to a better start. Having obtained these results, it remained to be established whether these differences would be apparent when normal rates of seeding were employed under field conditions.

Two separate studies were undertaken. For the first study, seed from four varieties of barley recommended for production in central Alberta were separated into three categories as to size. In analyzing the crops grown from each of the seed categories, factors affecting yield as well as yield itself, were considered. For the second study which involved many different varieties, the seed was classified into only two categories and yield effects were the main interest.

In the first study, lots of seed designated small, medium and large, representing approximately 20, 60 and 20 per cent respectively of the original sample, were obtained through sieve separation for each variety. These three categories for each variety together with a sample of the original seed, designated "bulk", were tested over a period of three years.

Seedling counts, head counts and yields were obtained from 5 tests located on the black soils and 2 on the brown soils of central Alberta. The average number of seedlings for all varieties and all tests in 2 rod-row plots seeded with small, medium, large, and bulk seed was 392, 402, 411 and 396, respectively. The average number of heads per plot was 598, 642, 667 and 642. Mean yields in bushels per acre were: Small—52, medium—62, large—66, and bulk —63.

For the second study, bulk seed of a number of different barley varieties was processed to a quality standard equivalent to a Registered No. 2. This seed was then passed over appropriate screens to separate the largest kernels, which represented approximately 20 per cent of this well graded sample. Using the original processed seed and the large kernels, 20 tests were conducted in 1960 and 1961 at different locations throughout central Alberta and in the Peace River block of northern Alberta and British Columbia. In 14 of the 20 tests, average yields from the large seed exceeded those from the remainder, and in only 3 tests were yield differences significant. These results might have been more striking had not extremely dry weather prevailed for extended periods at a number of the locations during the testing period. The important aspect is the fact that significant yield increases materialized at some locations by using only large seed.

These results suggest that extreme care should be exercised in the processing of seed. We found that yield increases will not be attained in all cases by using only large seed, but, if conditions are

The authors are with the Plant Breeding Section, Experimental Farm, Lacombe, Alta.

favourable, the extra effort expended for processing may reap sizeable returns.

Seed Size and Smut

While conducting the above experiments, it was noted that some crops grown from small seed showed as much as tenfold the number of loose-smut infected plants as crops from large seed of the same sample. Collaboration with other workers revealed that similar results had been obtained at the Saskatoon Research Station where varying amounts of the disease appeared in seed lots of 5 different varieties.

These were screened into large, medium, and small lots, of which the mean 1000-kernel weights were large—45.1 grams, medium—33.6 and small—24.5. Embryo tests to determine the percentage of infected kernels showed the large had 3.2 per cent infection, medium 8.7 and small 13.5.

These results were supported by work conducted at Edmonton and Lacombe using barley seed that had 13 per cent loose smut infection. This seed was separated into 3 categories, corresponding to 1000-kernel weights of 46.0, 34.8, and 23.6 grams. Averaging data obtained from two growth tests conducted at Lacombe and Edmonton showed the following percentage infection: large—1.5, medium—8.9, and small—18.8 per cent.

From the above data, it would appear advisable to use only large kernels for seed if a given stock is known to be heavily infected with loose smut. Extra cost in processing would not be great when the reduction in infection is considered.

Betzes barley. Crop (right of stake) grown from large seeds; crop (left) grown from well graded seed.

Seed Source and Yield

In the summer of 1959 at Lacombe, we obtained some marked differences in yield from seed of the same variety which had been produced at different locations in the previous year. All lots of seed had been processed to approximately the same level, seed size was comparable, germination was equal for each lot, and there was no difference in the diseases carried on the seed. Nevertheless, yield differences as high as 20 per cent were recorded with no explainable reason other than the different source of the seed used.

During the three-year period, 1960-62, we studied at Lacombe the effects of seed source on yield and other characters of barley, in co-operation with the Ontario Agricultural College, Guelph, and the Department's research establishments at Brandon, Manitoba, and at Lethbridge and Beaverlodge in Alberta. Common stocks for each of 4 barley varieties were propagated in the year previous to testing at the above locations. Tests were conducted at each location in 1960 and 1961 to compare the performance of seed from the different sources. In 1962, two further tests were conducted in the Lacombe area using seed produced at the same five locations.

During the three years of testing, results from 10 of the 12 tests showed significant yield differences attributable to the source of seed. The magnitude of the differences from certain sources of propagation amounted to as much as 8, 9 and 17 per cent in 1960, 1961 and 1962, respectively. Seed size was one of the factors contributing to these differences in 1961 and 1962, but in 1960 factors other than size must have been responsible. There was some indication that chemical content of seed may have exerted an influence but no definite pattern was established. This remains for further investigation.

To sum up, results obtained from these yield studies emphasize the necessity for processing all seed stocks to a high level if maximum production is to be attained. The fact that large kernels carry less loose smut infection than smaller one is also an important phenomena. Heavy screening is a practical means of reducing the disease. Seed source may also exert an influence on crop production. Results to date indicate that chemical content of seed may be responsible for yield differences and further studies are underway in efforts to establish relationships between crop production and chemical constituents. In the meantime it is suggested that strict attention be paid to the physical properties of seed.

Plants of Husky barley grown from large (heavy growth) and small (light growth) seeds.

Pepper maggot. *Left:* Adult (upper), larva (lower). *Right:* Feeding damage by a larva in seedbed of a pepper fruit.

Tests Continuing . . .

How to Control the Pepper Maggot

W. H. Foott

THE pepper maggot has become a problem to both grower and processor. Because of its extensive feeding just one larva can make a pepper unusable. Also, since feeding is commonly limited to the inner portion of the fruit, growers unknowingly sell peppers which are infested and draw the ire of the consumer. This latter factor, namely, a hidden infestation, is of special concern to canners as entire insects or portions of them float to the top of jars and cans and must be removed.

The CDA Research Station, Harrow, Ont., has been and is continuing investigations on how to best control the pepper maggot. Previously confined to the eastern United States, this insect, which was first found near Harrow in 1956, has since increased rapidly, severely and widely infesting Essex County. The maggot has also attacked eggplants, but to a much lesser extent than peppers. Horse nettle is a wild host.

Dr. Foott is a specialist with Entomology Section, CDA Research Station, Harrow, Ont.

In our investigations we employed both cultural practices and the use of insecticides. We found that peppers should be planted as far away as possible from an infested field of the previous year. Our studies also revealed that peppers should be planted towards the direction of the prevailing wind (in our case the southwest) thus preventing adults from being disseminated by air currents. A further recommendation is that growers excavate a hole large enough to hold one season's culls and bury the top layer of peppers under 2-3 feet of earth. This suggestion is based on our findings that few if any flies could emerge from this depth of soil.

Chemical Control Studies

In our chemical control studies on the maggot, we used malathion at 1.5 pounds actual per acre. We found that the first application must be made immediately flies emerge from the ground. Our research revealed there is strong evidence that control with this material depends almost entirely on killing the adults before they can oviposit. Our tests also demonstrated that at least two other applications at weekly intervals should be made to get satisfactory results.

We found that Sevin and Dylox gave better control than malathion but both materials encouraged major increases of aphids. Dylox, of course, cannot be used within 21 days of harvest. Another material, Thiodan, gave better control than malathion of both the maggot and aphids. We are continuing our tests on Thiodan to try and substantiate its superiority over malathion which is still the standard recommendation for use on peppers.

LIFE CYCLE

The pest overwinters in the pupal stage, usually within the top two inches of soil. Adults start to emerge near the end of June or beginning of July and reach peak numbers about mid-July. Eggs are laid in the walls of the fruits and in small peppers they protrude into the cavity of the fruit. Seven to 11 eggs per pepper are common in a heavily infested field and a maximum of 18 eggs was observed in one fruit.

The newly hatched larvae usually crawl over the inner surface of a fruit until they reach the seedbed. Here they penetrate the spongy tissue and feed until mature. Full-grown larvae bore through the wall of the pepper, drop to the ground, and enter the soil to pupate. In a few instances, feeding is confined entirely to the wall, in others both the wall and seedbed are utilized.

The period required for development from egg to mature larva is approximately one month. In trials with burying pupae in the soil, we found that the pupal stage is the critical one in the life cycle of the insect with less than 30 per cent producing adults. There is only one generation per season.

Left: **Field plot collection of grasses; each individual plant (inset) is labelled.**

Left: **Portion of the 450,000 dried specimens stored in herbarium at Ottawa.**
Right: **Close-up of standard herbarium sheet.**

Plant Collections

Their Role in Agricultural Research

Roy L. Taylor

THE development and improvement of the important food plants and their accompanying weeds have gone hand in hand with man's civilization since and before Biblical times. Today many of these food plants and weeds no longer resemble their original parents, e.g. recent research has shown that corn probably originated from a small grass-like plant. Although limited information can be obtained from illustrative and written data on the early development of such plants, the first actual specimens that are still available for study were prepared by Cesalpino, an Italian botanist, in the 16th Century. These consist not only of pressed and dried plants in fruiting or flowering stages but also data about the place of collection.

How is work based on plant collections related to present agricultural research? Well, we need to know a plant's background, how it grows and reproduces, and its relationship to other plants as well as to members of its own family. Occurrence and distribution are also important, but since we are unable to complete a study of plants in their natural environment, we use herbarium specimens or plantings where the research is being carried out.

Theoretical research on basic problems concerned with the growth, development, reproduction and distribution of plants provides a foundation for the study of many practical agricultural problems. Often such information is best gained by studying a native plant and not a highly specialized agricultural one that has passed through a rigorous selection screen and has been introduced into areas where survival would be impossible were it not for man's help.

Dr. Taylor is a specialist in experimental morphology and anatomy, Plant Research Institute, Research Branch, Ottawa, Ont.

The development of new crop plants and methods for controlling the spread of weedy species is often clarified by the study of native plants in related families. To do such studies adequately, the Plant Research Institute at Ottawa maintains productive plant collections housed in the proper physical facilities and looked after by specialized trained personnel.

Today's research program in the Plant Research Institute has as its basis both living and dried plant collections. The living are grouped as: (1) permanent collections represented by the Botanic Garden and Arboretum, and (2) temporary ones which are grown in field plots or in greenhouses. The former provide an opportunity for the public to see ornamental and native plants that may be used for garden purposes as well as make it possible to observe various representatives of Canadian plant families. The latter are the working collection used in current research programs.

The herbarium or collection of dried specimens is closely linked with the development of living collections. Plants are frequently collected as vouchers for the experimental work completed. These specimens are dried, mounted, classified and stored in the herbarium and provide a ready reference for both present and future research. The herbarium houses mostly native and introduced species that occur in Canada. This dried collection provides a basic working tool for botanists who are preparing plant lists and identifying the many specimens that are sent in by amateurs and professionals alike.

Left: **Measuring electrical resistance of dormant terminal shoots of Solo peach.** ***Right:*** **Close-up view of simple electrode clamping device applied to a vigorous lateral branch of a seedling peach.**

Breeding Winter-Hardy Peach Varieties

G. M. Weaver

CONCERN FOR the effects of low winter temperatures on fruit trees extends into Southwestern Ontario. In this rich horticultural district, peach production ranks second only to that of the neighboring Niagara Fruit Belt.

Because of the unusually mild winter climate, tempered by the Great Lakes, severe losses in production through low temperature damage to fruit buds are rare, but occur about once in every 30 years. However, serious tree losses are experienced at more frequent intervals in orchards located on the lighter sandy soils, because of the combined effects of sub-zero temperatures and low soil moisture on relatively tender rootstock and scion varieties. The recent heavy costs involved in replacing trees damaged in the 1962-63 winter to return orchards to their original state of productivity is of major concern at this time when economic factors encourage a rapid expansion of the fruit industry in the area.

The long-term solution lies in improving the winter hardiness of our existing peach varieties through plant breeding methods.

The peach tree has a minimum life cycle of three years; that is, a span of three years is required to raise a fruiting tree from seed. As a result, progress in varietal improvement is slow, especially when a trait such as resistance to sub-zero temperature is measured and such temperatures occur infrequently. Until recently, the breeder has waited impatiently for severe winter temperatures to screen his seedling populations under natural conditions for hardiness. As a result, some newer varietal releases have never been properly evaluated in this regard.

To obtain a better assessment of low temperature injury, we have used a test location in Lambton County, 100 miles north of the Harrow Research Station, to screen the peach breeding materials for winter hardiness. This test has been exceptionally rewarding, and it has established the validity of Wilner's electrical resistance method (see accompanying article) for measurement of wood hardiness.

The electrical resistance method is desirable because it gives a numerical value related to wood hardiness. This is measured simply by the introduction of electrodes into the woody tissues and measuring their resistance to an electrical current. To a pomologist and fruit breeder who has experienced the complexities in sorting out the effects of winter damage and especially in evaluating hardiness under natural conditions, this method seems too good to be true. The results of our own research this past season have shown however, that there is no basis for continuing pessimism regarding the future value of this method.

Many factors affect electrical resistance readings: tissue maturity, location on the tree, soil type and moisture conditions, even the direction of the sunshine falling on the surface of the leaves and stems. By standardizing our test methods to limit such variation, we can approach the measurement of true genetic differences. Partial confirmation that these differences are related to degrees of wood hardiness is obtained by comparisons of known standards among peach varieties. A critical test was pro-

Dr. Weaver is Head of the Horticultural Crops Section, CDA Research Station, Harrow, Ont.

vided by the record of seedling survival in Lambton County in 1962-63 since there can be no doubt that survivors of that winter freeze possess some true level of genetic hardiness. The distribution of survival at this test site corresponded almost exactly with electrical resistance readings taken on comparable seedlings at Harrow, *100 miles further south.*

To the plant breeder the implications are extensive. Efficiency in developing winter hardy varieties should increase greatly, since with our own plant progenies 90 per cent of the seedlings could be discarded within the first season of growth because of insufficient wood hardiness. Of equal importance, however, is the assurance which can now be passed along to the prospective fruit grower concerned about the future performance of new varietal releases. The introduction of good hardy varieties will eventually lead to expansion of the presently restricted peach industry into areas which have been previously determined as marginal solely on the basis of climate. The door is then opened to greater economic returns through cultivation of lands valued somewhat less than the present $2000 to $6000 per acre.

* * *

Dr. J. Wilner (below), Plant Research Institute, Ottawa, uses electrical resistance to determine winter hardiness of a young apple tree. Wires leading from plant and earphones are connected to Bouyoucos Bridge; a dial is rotated to and fro until silent point is detected with earphones, then measurement is read from dial in ohms. Results have shown that generally no injury occurs in hardened twigs when the resistance readings are above 35,000 ohms, but resistance below 8,000 to 10,000 ohms usually indicates severe injury and intermediary readings signify partial injury to tissues.

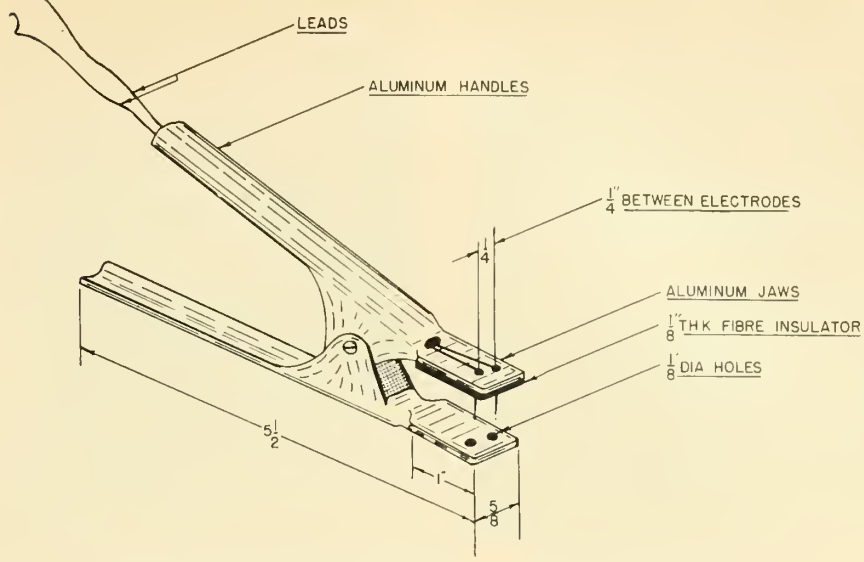

Electrode apparatus; all measurements are given in inches.

Simple Device Developed . . .

Measures Winter Hardiness in Fruit Trees

J. Wilner

RESULTS OF studies by the CDA Plant Research Institute at Ottawa in evaluating winter hardiness in apple trees have established that it is possible to measure this by a simple electrical resistance test. The test is also being used by researchers at other CDA establishments. For example, Dr. G. M. Weaver, CDA Research Station, Harrow, Ont., in the accompanying article, reports on his success the past year using the resistivity method to evaluate winter hardiness of peach trees.

Using an electrode apparatus made by the Department's Engineering Research Service, and a simple meter (a Bouyoucos soil moisture meter was used in this instance), we can reliably evaluate winter hardiness. This method using the electric technique of resistance—a refinement from earlier methods that destroyed the tissue—is very simple to use, and can save much time and cost in obtaining information of critical importance to fruit tree researchers. We have found in our research at Ottawa that when this method is properly used, it is more sensitive and probably just as reliable as long-term field survival tests.

The apparatus is portable and the electrodes may be clamped on to the tissue of the seedling in the orchard to study the genetic differences as well as effect of cultural methods and management practices on both seasonal maturity and winter hardiness of economic plants.

Results of our experiments have been published in the scientific literature, and reprints of papers are available on request from the CDA Plant Research Institute, Ottawa, Ont. *Research for Farmers (Fall '58)* carried a comprehensive article on 'winter hardiness research'. The results of such findings have encouraged other workers here and abroad to increase their research in winter hardiness and in particular to use the resistivity method with its much wider and simpler application in tree fruit breeding.

Dr. Wilner is a specialist in winter hardiness research on fruit trees, Plant Research Institute, CDA Research Branch, Ottawa, Ont.

A gauche: **Plante de pomme de terre atteinte de flétrissure bactérienne. A remarquer le flétrissement des feuilles. A *droite:* Fendillement du périderme causé par la flétrissure bactérienne.**

Coupe d'un tubercule illustrant les méfaits causés par la flétrissure bactérienne dans la zone vasculaire.

Les modes de dissémination de la flétrissure bactérienne de la pomme de terre

Henri Généreux

DEPUIS son apparition au Canada, en 1931, la flétrissure bactérienne n'a cessé de causer des dommages à la culture de la pomme de terre. Chaque année, plusieurs acres cultivées en vue de la certification sont rejetées à cause de la présence, si minime soit-elle, de la flétrissure bactérienne.

Il convient donc d'étudier les divers agents de dissémination de cette maladie.

La flétrissure bactérienne est causée par un agent pathogène du nom de *Corynebacterium sepedonicum*. Comme les bactéries de la flétrissure hivernent généralement dans des tubercules légèrement infectés, il est assez facile de concevoir que les tubercules constituent la principale source de contamination. Divers travaux de recherches révèlent que de 50 à 90 pour 100 des plantes peuvent être atteintes de flétrissure, si l'on met en terre une semence provenant d'une récolte malade. Fort heureusement, l'usage de semence certifiée réduit les risques de contamination.

M. Généreux est phytopathologiste à la Station de recherches, Ministère de l'Agriculture du Canada, La Pocatière (Québec).

Dissémination par le couteau

Les cultivateurs disséminent inconsciemment l'organisme de la flétrissure en tranchant les tubercules à la plantation. Les expériences de la Station de recherches de La Pocatière révèlent qu'un couteau, contaminé par le passage de sa lame dans un tubercule malade, peut infecter jusqu'à vingt tubercules consécutifs. Il est évident que l'infection sera plus grave au début de l'opération, mais il suffit de savoir que la maladie peut se transmettre à l'aide du couteau aux buttes issues du 20e tubercule pour démontrer la virulence du pathogène.

Les résultats d'expérience indiquent aussi que la plantation de tubercules entiers diminue considérablement les ravages de la maladie dans les champs de pommes de terre. La différence d'infection entre les buttes issues de tubercules entiers et celles produites de tubercules éclatés est d'autant plus prononcée que le pourcentage de tubercules malades dans la semence est élevé.

Quel que soit le degré d'infection de la semence, il faut se rappeler que le couteau constitue l'un des meilleurs agents de dissémination de la flétrissure.

Dissémination par les instruments

On sait depuis longtemps que cette maladie se transmet à l'aide d'instruments au contact des tubercules infectés. Ainsi, les planteuses, les arracheuses et les classificateurs sont les instruments qui viennent le plus souvent en contact avec les tubercules de pommes de terre. Plusieurs cultivateurs contaminent chaque année leur semence par l'usage de planteuses ayant servi à mettre en terre des tubercules malades. Des expériences récentes démontrent à l'évidence qu'une planteuse à table rotative, contaminée à l'aide de tubercules malades, peut infecter

jusqu'à 64 pour 100 des 200 premiers plantons mis en terre, tandis qu'une planteuse à pics, contaminée de la même façon, peut infecter jusqu'à 86 pour 100 des plantons. Ces résultats indiquent bien que la planteuse à pics propage plus facilement l'agent pathogène que la planteuse à table rotative.

Dissémination par les contenants

On a observé que les sacs de jute peuvent se contaminer au contact de tubercules malades. Des tubercules qui ont été laissés quelques heures dans ces sacs ont augmenté l'infection de 21 pour 100 dans le champ. Il a aussi été démontré que les bactéries de la flétrissure sur des sacs de jute étaient encore virulentes après quelques mois.

Dissémination par les entrepôts

On conseille souvent aux cultivateurs de désinfecter leurs caves avant d'entreposer leur récolte. Cette mesure de précaution est nécessaire afin d'éviter la contamination d'une récolte saine ou certifiée. Car la flétrissure peut se transmettre à des tubercules sains au contact d'une surface contaminée et l'agent pathogène est encore virulent après plusieurs mois d'exposition.

Dissémination par les insectes

Est-il possible que les insectes puissent transmettre la flétrissure bactérienne? Des expériences récentes faites sous cages, en serre, indiquent que des insectes du feuillage de la pomme de terre, tels que le doryphore *Leptinotarsa decemlineata* (Say), la cicadelle *Macrosteles fascifrons* (Stal), la punaise terne *Lygus lineolaris* (P. de B.), le puceron *Myzus persicae* (Sulz.) et l'aphrophore, peuvent transmettre l'agent pathogène de la flétrissure. L'infection a été obtenue par l'inoculation de plantes saines, soit avec des suspensions d'insectes broyés ayant séjourné sur des plantes malades, soit avec des suspensions de feuilles ou de plantes lyophilisées, ayant hébergé des insectes contaminés. L'infection a pu aussi être obtenue sous cage par le libre mouvement des insectes d'une plante malade à une plante saine. A l'exception de l'altise, tous ces insectes ont pu infecter en serre des plantes de pommes de terre qui produisirent par la suite un certain nombre de tubercules infectés, mais qui ne manifestaient aucun symptôme. En serre, seul le doryphore a pu infecter des plantes dont les tubercules-filles ont parfois donné naissance à des tiges manifestant des symptômes de la flétrissure.

Nous poursuivons des expériences afin de savoir si, en plein champ, le doryphore peut transmettre l'agent pathogène de plantes malades à des plantes saines. Rien ne l'indique encore.

Dissémination dans le sol

Selon des recherches faites à La Pocatière, l'agent pathogène de cette maladie ne peut survivre en hiver dans un sol ordinaire, non stérilisé.

Cependant, la dissémination a été observée dans le sol en serre en alternant des plantons sains et des plantons inoculés à la plantation. A maturité, les tubercules issus de plantons sains furent entreposés durant six mois. Après ce stade de conservation, ces tubercules furent examinés afin de déceler l'organisme pathogène. L'examen microscopique révéla que 35 pour 100 des buttes étaient infectées. En plein champ, il a été observé que la flétrissure peut être disséminée d'une plante malade à une plante saine mais on ne connaît pas encore les agents de cette dissémination. Le degré de transmission n'a guère dépassé 2 pour 100, mais ces résultats peuvent expliquer en partie l'apparition soudaine de la flétrissure dans un champ de semence, lorsque l'on ne peut apporter d'autre explication à la présence inusitée de la maladie.

Conclusion

Il est incontestable que si une semence est totalement exempte de flétrissure bactérienne, sa propagation est presque nulle et les instruments qui servent à la disséminer de même que les divers contenants cessent de remplir leur rôle néfaste.

Le couteau est sans contredit le principal agent de dissémination quand une semence est infectée. Il en est ainsi des planteuses et des arracheuses mécaniques. Les cribles, les sacs, de jute ou de papier, les boîtes, les entrepôts aussi bien que les véhicules de transport sont de bons agents de dissémination s'ils viennent en contact avec des tubercules atteints de flétrissure.

Il est évident que le sol non stérilisé n'est pas un milieu favorable à la survivance de l'organisme pathogène et que le sol ne peut être considéré comme moyen de dissémination de la flétrissure.

Comment expliquer alors l'apparition soudaine de la maladie dans une plantation? Il est possible qu'une semence soit si peu infectée que la maladie passe inaperçue au cours de la période de végétation et que, l'année suivante, elle produise des plantes qui manifesteront des symptômes. Il se peut aussi que les instruments utilisés pour les divers travaux ou bien que les insectes ou encore que les tubercules oubliés dans un champ infecté lors de la récolte provoquent l'apparition soudaine de la maladie.

Somme toute, la flétrissure bactérienne est une maladie très contagieuse qui requiert beaucoup de prudence de la part des producteurs de semence et de consommation. L'usage de bonnes semences certifiées constitue le meilleur moyen de réduire les dégâts causés par cette maladie.

L'auteur examinant des racines de pommes de terre pour flétrissure.

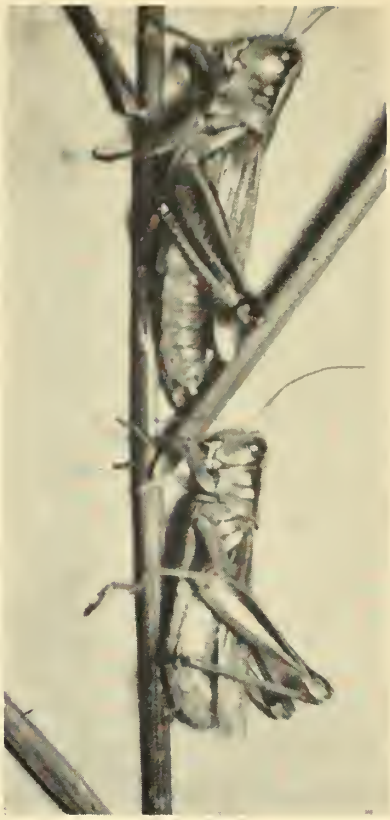

Kersley strain of Melanoplus bivittatus (Say).

Year-Hopping Grasshoppers

Here's a phenomenon that illustrates the importance of a knowledge of the biology of pests.

R. H. Handford

OBSERVATIONS on grasshoppers in central British Columbia and in the Peace River area indicate that neither control operations nor surveys for forecast purposes will be necessary in those areas in odd-numbered years. This is yet another example of the importance of a knowledge of the biology of pests in organizing and conducting practical control activities.

In Canada the pest species of grasshoppers have until recently been considered to complete one generation every year. Some of them, however, are now known to require two years to complete their life cycles, at least in the areas mentioned above. There was a hint of this in an unpublished report of the Field Crop Insect Laboratory, Vernon, B.C., in 1930, when E. R. Buckell wrote, "Residents in the Peace River Block assert that grasshoppers hatched in millions in 1930 on land heavily infested in 1928, but free in 1929, and claim that the eggs lay dormant in the soil throughout 1929". No further reference to this probability is made in Buckell's subsequent reports or publications. In 1948, however, farmers in the Kersley district of central British Columbia informed Professor G. J. Spencer of the University of British Columbia that outbreaks occurred there in alternate years only, and from Professor Spencer's initial observations it appeared that their statements were true, at least for the two-striped grasshopper, *Melanoplus bivittatus* (Say).

Annual observations of grasshopper outbreaks in the Kersley and Quesnel districts were begun by the author in 1952 and continued to date by various members of the Kamloops staff. Observations were first made in the Peace River area of Alberta and British Columbia in 1953 and regular surveys were begun in 1956.

Throughout the 10-year period, populations of the two-striped grasshopper have occurred at many of the observation points in even-numbered years, sometimes up to an estimated 500 nymphs per square yard; the species has been rare in odd-numbered years. Populations of the species have been relatively low and sporadic in southern parts of the province. However, sampling done near Kamloops from 1953 to 1958, in a study of other species, yielded the numbers shown below. The number of net strokes was the same in each collecting point each year. The data strongly suggest a 2-year cycle for an altitude of 3000 feet or higher.

	1953	1954	1955	1956	1957	1958
At 3000 feet or higher	5	147	3	73	1	69
Below 3000 feet	2	2	0	3	2	10
Totals	7	149	3	76	3	79

Laboratory studies at the Research Station, Saskatoon, Sask., showed marked differences in hatching requirements between eggs of the "Kersley strain" and the "prairie strain" of the two-striped grasshopper. The percentages of total hatch of eggs from laboratory-reared females were as follows:

Refrigeration	*Prairie Strain*	*Kersley Strain*
After first	81.0	23.5
After second ..	19.0	72.4
After third ...	0	4.1

The two periods of exposure to low temperatures required to produce the main hatch of the Kersley strain of the laboratory correspond to the two winters to which the eggs of this strain are subjected in the field and suggest two inherent interruptions of embryonic development; most of the prairie strain having only one. However, the fact that a small percentage of the eggs of the prairie strain appear to require two periods of exposure to low temperatures suggests that a mechanism for the development of a 2-year life cycle may be latent in the two-striped grasshopper throughout much of its distribution. In any event, it seems reasonable to assume that such a mechanism has enabled the species to survive at more northerly latitudes and higher altitudes, where total heat units are relatively low.

Puzzling aspects of the phenomenon are why a second brood has not developed to fill in the odd-numbered years, and why populations separated by considerable distances are in phase.

Less frequent observations on lighter and more sporadic infestations of the related Bruner's grasshopper suggest that this species also requires two years to complete its life cycle in districts where the two-striped requires this interval. A few fields at Kersley and Taylor had relatively high populations in even-numbered years and practically none in odd-numbered years. Popula-

Concluded on page 15

Dr. Handford is Director, CDA Research Station, Kamloops, B.C.

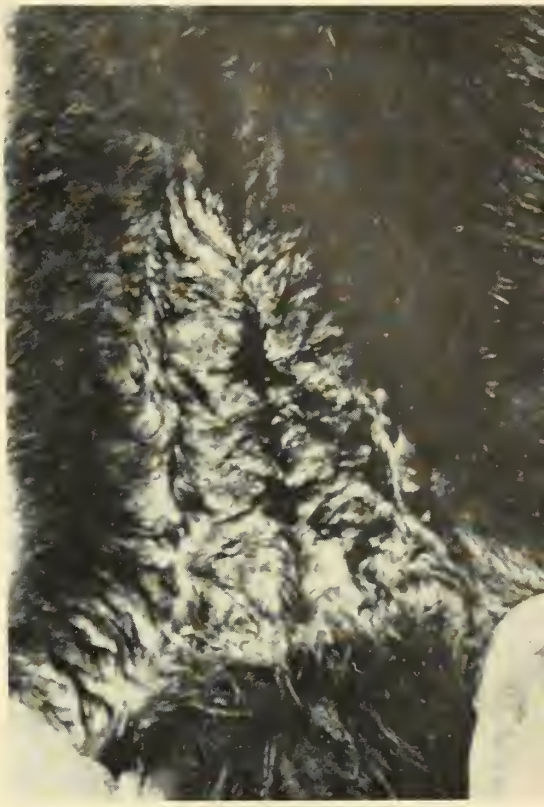

Wet-belly disease in a female mink (above) and in a male mink (right).
Heckbert Photos

Wet-Belly Disease in Ranch-Bred Mink

For years this disease was thought to be due to faulty nutrition but present evidence points to infection as cause.

C. K. Gunn

WET-BELLY disease is widespread and causes heavy economic loss in the mink ranching industry today. During the past seventeen years, this condition has generally been ascribed to faulty nutritional ingredients in the rations. With the shortage of horse meat for mink feeding purposes, protein substitutes such as chicken waste, whole fish and tripe have largely replaced it in mink rations. This change in feeding practice was observed to give rise to the disease.

In our investigations at the Experimental Fur Ranch, Summerside, P.E.I., we have shown that wet-belly disease is an infective condition, occurring under ranching conditions when heavily infected young male mink become chilled. However, the disease can be experimentally induced among infected females and adult male mink by more drastic exposure of these animals to cold housing conditions.

In wet-belly disease, the fur is frequently stained on the belly side of mink and gives rise to unprime, pigmented leather underlying the externally wet area of fur. The fur hairs of unprime leather pull out readily after the pelt is dressed. These serious defects in the pelts from affected animals greatly reduce their valuation at the fur auctions.

Our studies at Summerside have revealed that the trouble is caused by a high bacterial content in mink rations having high proportions of animal intestines such as chicken entrails, whole fish in which the intestines are present, and the intestine of cattle (tripe). We found that these feed stuffs, when experimentally fed in high proportions caused as high as 70 per cent wet-belly disease among kit male mink.

Some of these bacteria, under conditions which lower the body defences, acquire the ability to invade tissues of the mink and set up an infective process. We confined our studies to one of these organisms (*Proteus mirabilis*) which is found more frequently in mink with wet-belly disease than among normal animals. We obtained it from diseased (inflamed) tissues of affected mink and, by means of a specific test (macroscopic agglutination), showed it to be the same organism as that found in the intestines of the affected mink, and in massive quantities in chicken waste, whole fish and tripe. This test also showed a large amount of antibodies in the blood serum of affected mink, an indication that this particular organism caused infection in the animals.

In our investigations, we found that horse meat rations cause practically no wet-belly disease, and *Proteus mirabilis* was not present. Horse meat is muscle meat and has a relatively low bacterial content compared with the massive contamination present in animals' intestines which are used in mink rations. However, when we added large doses of the organism to a horse meat ration, as many as 50 per cent of kit males developed

Concluded on page 15

Dr. Gunn is Director, Fur Animal Research, Experimental Fur Ranch, Summerside, P.E.I.

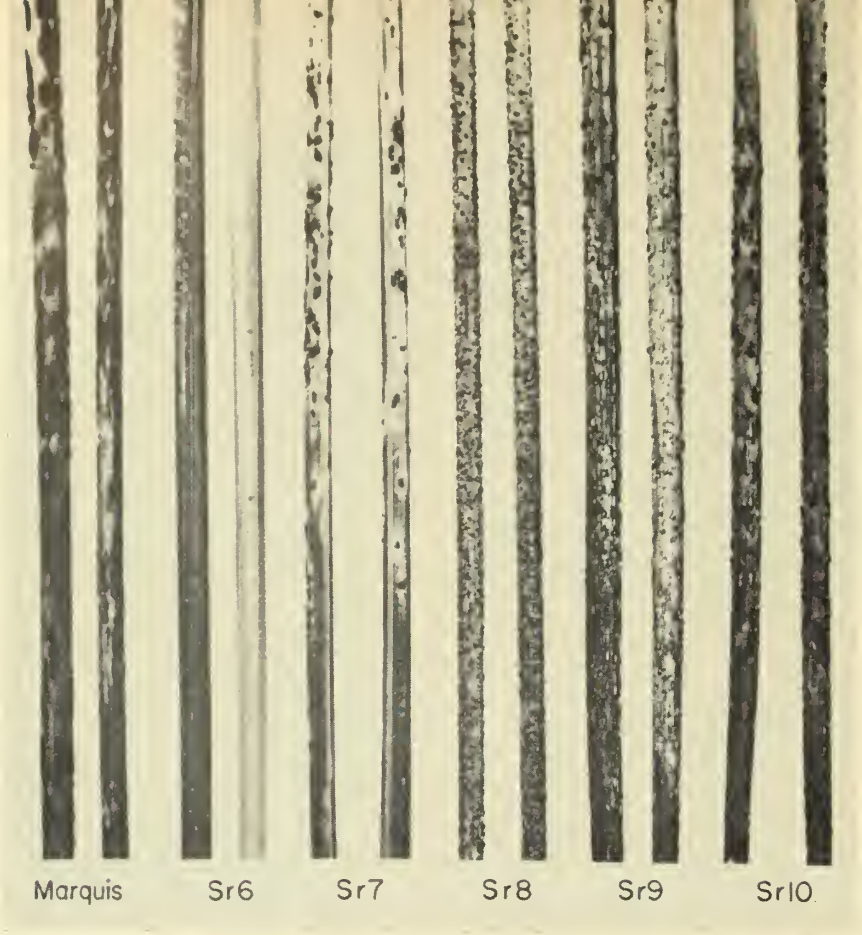

Rusted stems of isogenic lines of Marquis wheat and Marquis itself. Marquis and the line carrying *Sr10* are susceptible. The line carrying *Sr6* is highly resistant, showing only chlorotic flecks where the rust penetrated the stems. The lines carrying *Sr7, Sr8, Sr9* are moderately resistant, showing small pustules and distinct chlorosis.

provide much of the missing information. Isogenic lines have been produced at the CDA Research Station, Winnipeg, Man., and other institutions, notably the University of Saskatchewan at Saskatoon, by studying the genetics of rust resistance in selected varieties and then transferring their resistance genes to susceptible varieties. The transfer is accomplished by successive backcrosses, that is, crossing a hybrid back to one of its parents. To transfer a resistance gene from a variety such as Kenya 58 to Marquis, a geneticist crosses the two varieties and then repeatedly backcrosses a resistant plant from the progeny of each backcross to the susceptible parent Marquis. Each backcross tends to halve the number of genes from Kenya 58 carried by the hybrid. After the first backcross, the hybrid is 75 per cent Marquis, after the second it is 87.5 per cent Marquis, etc. Backcrossing is continued until Marquis is reconstituted. The resulting variety is called an "isogenic line" of Marquis because, for practical purposes, it is "iso" or equal genically to Marquis, except for the single rust resistance gene.

How Isogenic Lines of Wheat Help Defeat Rust

G. J. Green

THE production of rust resistant varieties by plant breeding is based largely on three scientific discoveries made between 1900 and 1920. One was that some wheat varieties are resistant and do not rust as badly as others, and another that the rust is composed of physiologic races that attack some varieties but not others. These discoveries were extremely important because Mendel's laws of inheritance, rediscovered in 1900, showed how a highly resistant variety could be produced by combining the moderate resistance of several varieties.

The breeding of resistant wheats was initiated in 1925 at the Winnipeg Rust Research Laboratory (now part of the CDA Research Station). Rust races were studied and varieties from all parts of the world were tested to discover the best sources of resistance. The most resistant variety was crossed with a good commercial variety and from the progeny of the cross varieties with good resistance, agronomic performance and baking quality were selected. Little, if anything, was known about the genes, or units of heredity, that governed rust resistance. This lack of knowledge made the plant breeder's task difficult because, in a sense, he was working in the dark and could not be sure of transferring the required resistance to a good commercial variety.

Dr. Green is a plant pathologist with the Canada Department of Agriculture Research Station, Winnipeg, Manitoba.

In recent years the well-known plant breeding technique of backcrossing has been employed to produce "isogenic lines" which

Six of the identified genes for stem rust resistance were transferred to isogenic lines of Marquis at the University of Saskatchewan and then each gene was studied intensively at the CDA Winnipeg Research Station. These studies showed that genes for stem rust resistance act in a variety of ways. The gene *Sr6* conferred very high resistance to many rust races in both seedling and adult wheat plants at low temperatures, but at high temperatures (about 80° F.) it is ineffective. The gene *Sr7* conferred only moderate resistance to some races, notably to most strains of race 15B. Genes *Sr8* and *Sr9* conferred moderate resistance to different groups of races in seedling and adult plants at high and low temperatures. The gene *Sr10* was not very effective in seedling plants but adult plants carrying it were resistant to a number of

races. The gene *Sr11* conferred high resistance to many races in seedling and adult plants at all temperatures. This kind of information shows the relative usefulness of each gene and allows plant breeders to select the combination of genes most likely to provide the best field resistance.

Isogenic lines also help solve another plant breeding problem. Each new variety is an improvement on older varieties. It is either more disease resistant, better agronomically, or better in baking quality. Many desirable, and in some cases, essential qualities have been accumulated in modern varieties and it is difficult to improve rust resistance without losing some of them. This difficulty is especially important when dangerous new rust races necessitate the prompt production of more resistant varieties. It can be solved by selecting the gene that gives best resistance to the new race and transferring it by backcrossing to an acceptable commercial variety.

Some of the Winnipeg Research Station's newest varieties have been produced by the backcross method. Selkirk was produced by backcrossing twice to Redman after crossing Redman with a variety carrying a stem rust resistance gene (*Sr6*) from McMurachy and leaf rust resistance genes from Exchange. Canthatch was produced by crossing Thatcher with Kenya Farmer and backcrossing five times to Thatcher. The gene *Sr7*, which provides moderate resistance to race 15B, was transferred to Thatcher from Kenya Farmer.

Isogenic lines have proved valuable also in studying the rust fungi at the Winnipeg Research Station. Physiologic races of rust are identified by the infection types they produce on varieties called differential hosts. The infection type results from the interaction of genes for pathogenicity in the rust with genes for rust reaction in the host variety. When an isogenic line of wheat is resistant to a culture of rust that attacks the recurrent parent variety, the single resistance gene it carries must confer its resistance. By using isogenic lines as differential hosts, races can be identified in terms of their ability, or inability, to overcome specific resistance genes. Potentially dangerous races are promptly recognized when the isogenic lines carrying the genes present in commercial varieties are attacked by a rust culture.

Time is of supreme importance when a dangerous new race of rust has been found. A new variety resistant to it must be developed and distributed to farmers before the new race becomes prevalent. The isogenic line is a new tool, and possibly a powerful one, that can be used to produce rust resistant varieties faster.

Wet-Belly Disease in Ranch-Bred Mink . . . *from page 13*

wet-belly disease. We also recovered the same organism from the affected tissues.

The chief economic losses caused by wet-belly disease occur in kit male mink. This is because at pelting time the disease is almost entirely confined to them, with less than one per cent occurring in kit females at this Station.

Wet-belly disease however, can be induced in a significant number of females and male adult mink, if they have received the wet-belly-inducing ration and are then exposed to cold housing conditions. (We experimentally induced wet-belly disease in 20 per cent of normal females and 50 per cent of normal adult males by exposure to cold after they received a disease-inducing ration). Exposure to cold, we found, lowers their resistance sufficiently for the potentially pathogenic organisms to infect them.

From our experience in reducing the incidence of wet-belly disease in mink we offer the following control measures:

(1) Clean and sterilize (with live steam, if possible) all dens and pens before placing young mink in them at weaning time.

(2) If raw chicken waste, whole raw fish or tripe are to be fed in the mink rations, take measures to see that (a) the feed is *free of fecal material,* (b) that all products containing entrails are *frozen immediately* after they are taken from the animals and they should be kept at low temperatures, (c) before using these ingredients in the mink rations, they should be *cooked, (boiled for 2 hours)*, (d) otherwise, *substantially reduce* the quantities of these by-products in the ration from October 1, until pelting date.

(3) *Keep the pens and nest boxes well bedded and dry,* especially during the autumn season to *keep the mink warm* during the change from warm weather to the cold autumn nights. If the furring shed is equipped with shutters, close them to *protect the mink from* the cold winds and rain in the autumn season.

Dwarf Cabbage . . . *from page 3*

heads. However, it is essential that adequate soil moisture be assured the second crop. The dwarf strains, Pee Wee, Little Leaguer and Junior, due to their early maturity, will produce primary heads from transplants early in the season and develop a crop of secondary heads by early September. The latter resemble heads of Brussels sprouts in size and appearance. Also, when cooked they have a flavor comparable to that of Brussels sprouts.

Commercial seed growers will have an opportunity to obtain stock seed from Morden for multiplication and general distribution as soon as the three small-headed strains breed true. This will likely be within one or two years.

Year-Hopping Grasshoppers . . . *from page 12*

tions on the Alberta side of the Peace River area have been very low, but a 2-year cycle is indicated by the following averages of Bruner's grasshopper per hundred square yards in a minimum of 138 fields per year: 0 in 1957, 8.6 in 1958, 0.7 in 1959, 1.3 in 1960, 0 in 1961, and 5.0 in 1962. Bruner's grasshopper has not been observed often enough to permit conclusions about the length of its life cycle at higher altitudes in British Columbia. It is, however, known to require more than one year at high altitudes in Wyoming (Kreasky, Joseph B. Ann. ent. Soc. Am. 53: 436-438, 1960.).

Two Promising New Blueberry Products

Tibor Fuleki

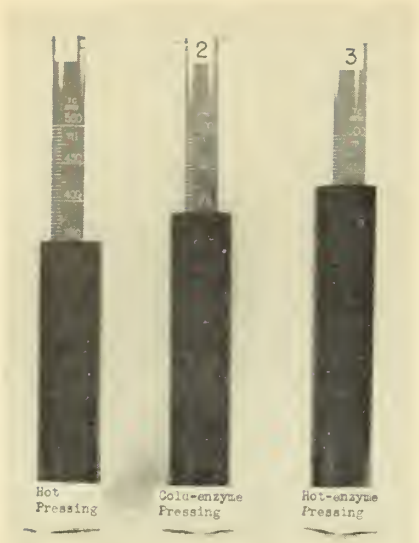

Volume of juice extracted from 1 pint of fresh blueberries after various pretreatments. Hot-enzyme pressing (3) is new, superior method developed at Kentville Research Station.

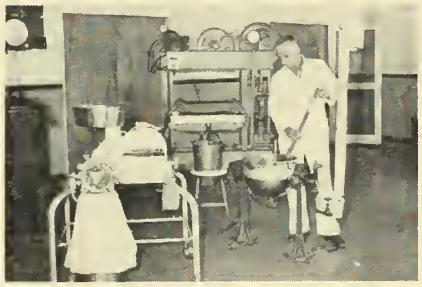

Above: **Crushed berries are heated to 145 F. before adding enzyme; juice is pressed at 4500 p.s.i.**

Below: **Author, using hydrometer, checks progress of fermentation.**

THE native lowbush blueberry is produced mainly in the Atlantic provinces and Quebec. Its delicious flavor and rich color are well known to Canadian consumers, being sold in fresh, frozen, canned and dried form and served mainly as fruit dessert and pie. In addition to flavor and color, the blueberry has a food value[1] that qualifies the blueberry for a more extensive consumption. At a time when producers are faced with declining prices, it would seem that one solution to the problems of surplus and over-dependence on export of raw berries would be the extension of the home market for this tasty fruit through the development and introduction of new products.

A research project was initiated by the author in 1961 at the Fruit Products Laboratory of the CDA Research Station, Kentville, N.S., with the object of developing new blueberry products. The most promising products for development appeared to be juice and fermented products so these were given first attention.

The extraction of blueberry juice is a difficult task because of the highly mucilaginous nature of the fruit. A method was worked out utilizing those newer commercially available pectic enzymes which require a relatively high temperature for optimum activity. By treating the berries previous to pressing with the enzyme at 145° F. a high yield (as much as 80%) of highly colored juice was obtained. The juice can be used in pure form or mixed with other fruit juices as a healthful drink.

To explore the possibility of wine-making from blueberries was a natural extension of the work. It is difficult to explain the lack of variety in fruit wines on the Canadian market where grapes can be grown only in the southernmost regions but some other kind of fruit or berry is grown in all the populated areas.

Blueberries make an excellent wine. The juice content of the blueberry wine developed at Kentville is around 35 per cent. We found that a high degree of amelioration is necessary because of the excessive color of the juice. Sugar, water, sodium metabisulphite (to prevent bacterial spoilage) and yeast nutrients are added and the fermentation is started with a selected strain of wine yeasts. The fermentation is allowed to proceed quickly so that the possibility of spoilage is kept at the minimum. The wine is racked off the lees after the fermentation is completed and the sugar and acid content is adjusted. After a short aging period the wine is filtered, pasteurized and bottled.

The new blueberry wine is of the dessert type with a well balanced flavor, a nice bouquet and a brilliant ruby color. The pleasant, slightly spicy-tasting wine is quite appetizing. A consumer acceptance test was carried out with a group of 221 people (90 women), mostly of middle age. The majority of the tasters (93%) expressed a definite liking for the wine.

The author is a Food Technologist with the CDA Research Station, Kentville, N.S.

[1] Rich in manganese and iron; also has a high pectin content.