PRICES
AND
INCOMES
COMMISSION

Robert G. Evans

Informetrica
Li

Price Formation in the Market for Physician Services

4901
2
pco

HD4901/.R1/E92

Price formation in the market for dhyc
physician services in Canada,
c. 1 pco pco

ACCESS CODE
CODE D'ACCÈS dhyc
COPY / ISSUE
EXEMPLAIRE
NUMÉRO c. 1

price formation in the market for physician services in Canada 1957-1969

by

ROBERT G. EVANS

July 1972

PRIVY COUNCIL OFFICE
BUREAU DU CONSEIL PRIVÉ
LIBRARY INFORMATION CENTRE
CENTRE D'INFORMATION DE LA BIBLIOTHÈQUE

«This is one of a series of studies prepared for the Prices and Incomes Commission. The analyses and conclusions of these studies are those of the authors themselves and do not necessarily reflect the view of the Commission».

Informetrica
LIMITED

© Crown Copyrights reserved

Available by mail from Information Canada, Ottawa,
and at the following Information Canada bookshops:

HALIFAX
1687 Barrington Street

MONTREAL
640 St. Catherine Street West

OTTAWA
171 Slater Street

TORONTO
221 Yonge Street

WINNIPEG
393 Portage Avenue

VANCOUVER
800 Granville Street

or through your bookseller

Price: $2.00 Catalogue No. RG33-10-1972

Price subject to change without notice

Information Canada
Ottawa, 1973

FOREWORD

The reader will rapidly become aware that this study is an attempt to make bricks with a limited number of short straws. It is admittedly long and footnote-choked; the volume of discussion being inversely proportionate to the soundness of the empirical information. Facts never speak for themselves, but good data are easier to speak for! I have tried to be as explicit as possible about the conceptual background and reliability of each piece of data I used, as this is a very controversial field in which many numbers of dubious quality and inconsistent definition tend to be flung back and forth in the process of debate. The question "What is the value of X?" where X may be the physician stock, incomes, prices, etc. can only be met by "Why do you want to know?" We have available values X_1, X_2, X_3, ..., all more or less unreliable, and the correct choice depends on the analytical role that X is required to play. If this study calls forth a higher quality of better specified data into the area of public debate it will have served a useful purpose regardless of the validity of its conclusions.

The Department of National Health and Welfare, particularly the Research and Statistics Directorate, have collected a considerable quantity of data on the pre-Medicare period in Canada. Data from this period are necessarily poor and fragmented, but the Department has an on-going program of data upgrading building on the basis of Medicare information which will improve our knowledge of this industry substantially over the next decade. This will of course depend on a continuance of their policy of making more and better data available for public discussion and research; a large quantity of good data on public expenditures now exists under the control of private medical associations and is not available even for internal governmental analysis.

Robert Armstrong and Lothar Rehmer of NHW were extremely generous in making available to me much of the data which they have developed on the pre-Medicare period; it will be obvious to the reader how much of the study is built on their published and unpublished data. They and Howard Shillington of Healthco in Toronto provided me with the data on the operations of Trans-Canada Medical Plans in the 1957-67 period. In the process of preparing the study I received helpful comments and assistance from a number of people, including John Cragg, John Young, and an anonymous reviewer at the Prices and Incomes Commission; Donald Anderson, Lloyd Detwiller, Hartley Lewis, William Stanbury, and Terry Wales at the University of British Columbia, as well as the members of the Labor and Human Resources Workshop in the Department of Economics; Lee Benham, Murray Brown, and Reuben Kessel at the Workshop of the Centre for Health Administration Studies at the University of Chicago; and Glen Beck, Peter Ruderman, and Hugh Walker.

None of the above would be willing to carry the can for this study, as I expect all would take issue with some of the contents and some remain unconvinced of the central theme. But this is a complex and contentious area, where many economic problems turn out to have deep social and philosophical roots, and wide agreement on analysis and policy is unlikely. I have tried to be as explicit as possible about the positions and assumptions I have worked from, and how I reached my conclusions; I think that all my basic premises are defensible even if debatable.

In preparing the manuscript Esmé Parish put a tremendous amount of effort into data grubbing and preparing tables on almost anything we could think of. Much of the work was done in 1970, using 1968 as a terminal year, so most but not all tables have been updated to 1969. The new census data has superseded some of the population data used, but the changes are trivial. Susan Aizenman typed the manuscript in her usual cliff-hanger style. And I as usual take the responsibility for the final product.

R. G. Evans

University of British Columbia

July, 1972

TABLE OF CONTENTS

Page

Foreword ... iii

Chapter 1. THE PRICE OF MEDICAL SERVICES 1957-69 ... 1
  Appendix 1-1: Analysis of the Estimates and Forecasts From the Task Force Reports ... 11
  Appendix 1-2: A Price Is A Price Is A Proxy ... 13

Chapter 2. MODELS OF PHYSICIAN PRICING BEHAVIOR ... 17
  Appendix 2-1: Equilibrium Responses of the Physician Model ... 39
  Appendix 2-2: Limitations of the Physician-Pricing Model ... 44

Chapter 3. MARKET BEHAVIOR OF PHYSICIANS BY PROVINCE ... 47
  The Stock of Physicians ... 48
  Physician Income Data ... 54
  Physician Migration Response to Income Differentials ... 58
  The Behavior of Physician Incomes ... 59
  Prices of Medical Services by Province ... 73
  Appendix 3-1: Construction of Provincial Medical Indexes ... 80
  Appendix 3-2: Adjustment of Population Data for Age-Sex Distribution ... 83
  Appendix 3-3: Alternative Estimates of the Canadian Physician Stock .. 87

Chapter 4. PRICE CHANGES WITHIN FEE SCHEDULES ... 97

Chapter 5. CONCLUSIONS ... 109
  Medical Service Price Data ... 109
  The Behavior of the Canadian Medical Market ... 111
  Implications for Government Health Care Policy ... 114
  Extended Self Regulation ... 115
  Incentives and Controls on the Consumer ... 117
  Direct Regulation of Physicians ... 120
  Appendix 5-1: The Future of the Physician Stock in Canada ... 125

TABLES

Chapter	Table		Page
1	I	Annual Averages of Various Components of the Consumer Price Index, 1957-1969	3
3	II	Active Fee Practice Physicians Per 100,000 Population, Canada and Provinces, 1957-69	50
	IIA	Alternative Physician Stock Measures, by Province, Physicians Per 100,000 Population	51
	III	Active Fee Practice Physicians Per 100,000 Population, By Province, Relative to National Average, 1957-69	52
	IIIA	Alternative Measures of Physician Stock Per Capita, By Province, Relative to National Average	53
	IV	Gross Professional Incomes of Active Fee Practice Physicians in Canada by Province, Relative to National Average, 1957-69	56
	V	Net Professional Incomes of Active Fee Practice Physicians in Canada by Province, Relative to National Average 1957-69	57
	VI	Yearly Wages and Salaries, 1957-69	62
	VII	Average Gross Professional Earnings of Active Fee Practice Physicians Relative to Average Wages and Salaries, Canada by Province, 1957-69	63
	VIII	Net Professional Earnings of Active Fee Practice Physicians Relative to Average Wages and Salaries, Canada, by Province, 1957-69	64
	IX	Physicians' Net Earnings as a Multiple of Average Yearly Wages and Salaries, by Province, Relative to the National Average, 1957-69	65
	X	Personal Income Per Person, Canada by Province, 1957-69	66
	XI	Average Gross Professional Earnings of Active Fee Practice Physicians Relative to Personal Income, Canada by Province, 1957-69	67
	XII	Average Net Professional Earnings of Active Fee Practice Physicians Relative to Personal Income, Canada by Province, 1957-69	68
	XIII	Physicians' Net Earnings as a Multiple of Personal Income, Relative to the National Average, 1957-69	69
	XIV	Personal Income per Person Relative to National Average 1957-1969	70
	XV	Interprovincial Comparisons of Increases in the Official Fee Schedules' Rates, Annual Averages, 1964-69	75
	XVI	CPI—Based Provincial Price Indexes	76
	XVII	Price Indexes for Medical Services Paid for by Private Insurance Plans, by Province	77
A. 3-2	A. 2-1	Adjustment of Population Figures for 1961	84
	A. 2-2	Adjustment to Population, 1968	84
	A. 2-3	Adjustment of Population Through Time	86
A. 3-3	A. 3-1		91
	A. 3-2	Physicians By Province, 1961, Various Data Sources 1961	92
	A. 3-3	Number of Physicians in Canada	94
4	XVIII	% Change in Fee Schedule, Early 1960s to 1970, by Province, Selected Items	100
	XIX	Price Indexes for Medical Services Paid for by Private Insurance Plans by Care Section	101
	XX	Distribution of Practitioner Visits between Home and Office, for Subscribers to Private Insurance Plans, 1957 and 1967	103
	XXI	Consultations Per Thousand Insured Population with and without Associated Procedures, by Plan and Year	104
	XXII	Amounts Paid to Member Physicians, per Consultation and Costs of Consulattions per Enrolee as Proportion of Total, by Plan and Year	105
A. 5-1	A. 1-1		126

chapter one

THE PRICE OF MEDICAL SERVICES: 1957-1969

The rapid increases in health services costs in Canada in recent years are now matters of urgent public concern.[1] Personal health care costs have been rising at average rates in excess of 10 per cent per year since 1957 and appear to be accelerating. These costs reached almost $3.9 billion in 1969, or 4.95 per cent of the Gross National Product (GNP).[2] This magnitude excludes capital expenditure, research and educational expense outside hospitals, and a number of other minor health expenditures. If we examine U.S. data on health expenditures we find that certain of these excluded categories (research, construction, eyeglasses and appliances, nursing home care) account for over 14 per cent of total expense.[3] If Canada's expenditures break down similarly, we might expect that $3.9 billion represents between 80 per cent and 90 per cent of total Canadian health expenditure, the total figure being somewhere between $4.3 billion and $4.9 billion in 1969 or between 5.5 per cent and 6.2 per cent of the GNP.[4] Within the total for personal health care, expenditure for medical services had reached $910 million in 1969, having grown at a slightly lower rate since 1957 than all health expenditures. Since 1965 it has accelerated to a growth rate of 13.7 per cent per year.[5] This item does not cover the whole of medical service costs, however, since it represents only total payments to active fee practice physicians plus an adjustment for certain salaried physicians in Newfoundland and Manitoba. Medical services provided by salaried physicians employed by hospitals, governments, or other organizations are included in total costs of those organizations. Since hospitals in particular employed 4,630 physicians in 1968, it is clear that the total cost of medical services supplied is substantially understated.[6] Moreover this number has tripled since 1957 while reported practicing physicians have increased by about 50 per cent. Thus the rate of increase is also understated.

---

[1] An index of the level of public concern is the volume of official investigations of the industry. The Federal Government has published the *Task Force Reports on the Costs of Health Services in Canada* (three volumes), Canada, Department of National Health and Welfare, Ottawa, Queen's Printer, 1969; from Ontario comes the *Report of the Committee on the Healing Arts* (three volumes and supporting studies), Toronto, Queen's Printer, Ontaric, 1970; and the *Report of the Ontario Council of Health*, Ontario Department of Health, Toronto, 1970; and from Quebec the Report of the *Commission of Inquiry on Health and Social Welfare*, Quebec, Government of Quebec, 1970. These of course, reflect a high degree of less publicized activity.

[2] Canada, Department of National Health and Welfare, "Expenditures on Personal Health Care in the Provinces of Canada, 1957-69," Research and Statistics Memo (Ottawa, November 1970), p. 11. Expenditures were rising almost as fast during the 1950s, but the reported data series for the earlier period are compiled on a slightly different basis. "Expenditures on Personal Health Care in Canada 1953-61," Canada, Department of National Health and Welfare Health Care Series No. 16, Ottawa, March 1963. In only one year (1955) since 1953 have personal health care expenditures failed to rise faster than GNP.

[3] D. P. Rice and B. S. Cooper, "*National Health Expenditures, 1929-1968*", *Social Security Bulletin*, Vol. 33 (1) U.S. Department of Health, Education and Welfare, Washington, D.C., January 1970.

The focus on medical services supplied through fee-for-service practice becomes more helpful, however, if one seeks to determine how much of the increase in expenditures is due to price increases and how much represents greater service flow. Efforts to measure the price component of expenditure change are hampered by the exceptional difficulty of defining industry output or final product; thus Anderson and Hull report a 13.8 per cent annual increase in hospital costs from 1950 to 1968 and divide this into 3.8 per cent annual output change and 9.5 per cent annual price change.[7] (Consumer Price Index (CPI) change over this period is 2.4 per cent annually.) Their results depend on the assumption that hospital output is equivalent to volume of patient-days, uncorrected for differences of patient mix, volume of out-patient care, research, or education, or any of the other forms of hospital activity which have expanded faster than in-patient care. In the case of medical services supplied by private practitioners, however, each unit of service passes through a market (or pseudo-market, if third-party insurance coverage applies) and is paid for at some specific price. Thus it is possible conceptually to divide up the units of output provided by fee-for-service practitioners into the different types of activities for which different fees are charged, and to measure the behavior over time of these fees.

Problems of adjusting for shifting patterns of service, quality change, and discounts from list price still remain, but these are problems in the construction of any price index. The problem of determining price change when only expenditure data are recorded and no suitable output measure exists, is of a different order of magnitude. Thus we know the total cost over time of operating hospitals, but their output is undefined. On the other hand, we could measure the volume of service provided by hospital-based physicians but present hospital accounting practice does not permit us to determine the cost of their services. Only for the fee practice physicians do we have both bits of information.

---

[4] A study by E. J. Hanson for the Task Forces on Health Costs estimates that total health service expenditures in 1968 were 6.22 per cent of GNP (Task Force Reports, *op. cit.*, Vol. 3, p. 399). Projecting his rates of increase to 1969 would yield an estimate of 6.4–6.5 per cent of GNP going to health services, thus the range presented here may be too conservative. The Task Force data are undocumented.

[5] "Expenditures on Personal Health Care," *op. cit.*, p. 23.

[6] See chapter three for data on the number of physicians in Canada. In 1968 there were 5,994 hospital-paid full-time medical staff in Canadian hospitals but 1,364 of these were junior interns. *Hospital Statistics, Vol. III, Hospital Personnel 1968*, Canada, Dominion Bureau of Statistics, Ottawa, Queen's Printer, July 1970. The physicians included in so-called physicians' services costs are only active fee practice physicians, i.e. "civilian physicians whose main employment is in the provision of personal medical services and whose professional income is mainly in the form of fees for services rendered", Foreword to *Earnings of Physicians in Canada, 1959-1969*, Canada, Department of Health and Welfare, Health Care Series No. 28, Ottawa, October, 1971, p. iii.

[7] R. Anderson and J. T. Hull, "Hospital Utilization and Cost Trends in Canada and the United States", *Medical Care*, 7 (6) November–December, 1969.

The most widely observed index of the behavior of medical care prices is the physicians' fee component of the Consumer Price Index. From 1957 to 1969 this index rose 47.5 per cent compared to the overall increase in the CPI of 32.9 per cent (Table I). On the other hand, the service component of the CPI rose 61.1 per cent in the same period. If we were to assume that service production is inherently resistant to technical progress, then we would expect service prices to rise faster than goods prices by approximately the rate of technical progress in goods production.[8] In this perspective, physicians' fees would appear to be rising at a relatively moderate rate compared with the price of services generally, and thus to be contributing little to the overall inflation problem.

TABLE I

Annual Averages of Various Components of the Consumer Price Index 1957-1969
(1961 = 100)

Year	C.P.I.	C.P.I. (Physicians' Fees Component)	C.P.I. (Services Excluding Shelter)	National Health and Welfare Fee Schedule Index*
1957	94.4	89.5	88.0	
1958	96.8	94.4	91.8	
1959	97.9	97.1	95.3	
1960	99.1	98.4	98.1	
1961	100.0	100.0	100.0	
1962	101.2	103.0	102.1	
1963	102.9	104.9	104.1	
1964	104.8	107.1	107.9	106.5
1965	107.4	110.1	114.6	109.8
1966	111.4	112.7	119.6	111.7
1967	115.3	122.4	127.0	120.8
1968	120.1	127.8	132.6	127.3
1969	125.5	132.0	141.8	134.6

*Excludes Quebec.

SOURCE: Canada, Department of National Health and Welfare, Research and Statistics Memo, *Health Care Price Movements*, Ottawa, April 1968; and Canada, Dominion Bureau of Statistics, *Canadian Statistical Review*, Ottawa, January 1971, as well as unpublished statistics supplied by the Department of National Health and Welfare.

---

[8] This theme is developed in W. J. Baumol and W. G. Bowen, *Performing Arts: The Economic Dilemma*, Cambridge, Mass., M.I.T. Press, 1968. The assumption of no productivity change in the service industries is, however, a very hard one to sustain, see e.g., V. Fuchs (ed.), *Production and Productivity in the Service Industries*, National Bureau of Economic Research Studies in Income and Wealth, No. 34, New York, Columbia, 1969. It appears very doubtful that price increases in the medical service industry can be explained by technical factors; the reasons why improvements in productivity have been slow either to take place or to be reflected in price patterns are behavioral and result from the peculiar market structure of the industry.

Several questions might be raised about this observation. First of all the number of items sampled is very small, only four service categories (office visits, home visits, confinement, and appendectomy) out of the hundreds of items in the average medical society fee schedule. Could these items be atypical in their behavior? Apparently not, since the CPI physicians' fees index is very close to an index based on extensive sampling of physicians' fee schedules by the Department of National Health and Welfare (NHW). This index begins in December 1963, and for the period 1964-1969 it follows the CPI component closely. By 1970 the range of items sampled was up to 350.[9]

One might argue, however, that the weighting used in the CPI tends to bias the index downward. Base period weights are used to construct a Laspeyres' index for consumer prices. But if volume of consumption tends to rise fastest for those items whose price is also rising fastest either because demand expands relative to an inelastic supply or because (as in the medical care industry) suppliers play a significant role in determining[10] demand then the price of an "average unit" of services will rise substantially faster than the index would suggest. On the surface, it would appear that this is not happening since the NHW index is based on current-period weights and shows similar movements. Moreover, within the CPI index both confinements and home visits rose faster than the overall index in price and yet declined sharply in frequency—confinements over this period fell by 25 per cent. Thus we would not expect that a Passche index or a more broadly based sample would show any different results.

And yet it is clear that the official price indexes are missing something very significant in reporting that medical price increases are about on a par with services generally. If we look at the gross income of active fee practice physicians from professional practice, we find that the average physician's gross income rose 122.7 per cent between 1957 and 1969.[11] If we accept the CPI price statistics as valid, medical prices rose 47.5 per cent over this period so that output per physician rose 51 per cent—a rather spectacular increase! If we add to this an increase in active fee practice physicians per head of population, Canada-wide, of 17.2 per cent[12] we are deriving an increase in medical services per capita of 77 per cent. Accepting the official price statistics, therefore, requires that we accept that a massive increase in the volume of physicians' services supplied to Canadians has taken place since 1957, and that the significance of increased output per physician in this process has been *three times* that of increased physicians per capita. Such a change would make total nonsense of the projections of supply and demand by the Hall Commission[13] and indicate that our highly expensive policy of expanding the physician stock as recommended by that Commission is totally unnecessary. Either the productivity of physicians is increasing rapidly (about 3.5 per cent per year) which explodes the notion that service industries enjoy no productivity increase (see note 8), or the official price indexes seriously understate the rate of inflation of medical service prices. At an upper limit, if physician productivity were not changing at all, the whole of the increase in their incomes would be price change. Thus we can say that the true rate of change of medical service prices from 1957 to 1969 was somewhere between 47.5 per cent and 122.7 per cent, compared with a CPI change of 32.9 per cent. The behavior of gross medical incomes does not *prove* that medical prices have risen much more rapidly than the official statistics suggest, but it forces us to choose between this conclusion and the alternative view that physician productivity has risen almost twice as fast as the overall rate of output per worker, so fast as to make an absurdity of all our current medical manpower planning and to indicate that the construction of new medical schools is a waste of billions of dollars. It is thus worthwhile to investigate why medical price increases might be understated.

---

[9] R. A. Armstrong, Director, Medical Care, Department of National Health and Welfare, personal communication.

[10] This theme, of the dependence of demand on supplier behavior, will occur often in the report. It is rooted in the tradition that the physician becomes the patient's agent, making consumption decisions on his behalf, including decisions about consumption of physician services. It is supported by the periodic references in the *Task Force Reports*, *op. cit.*, to physicians recalling patients for extra visits to raise fees (Vol. 3, p. 260) or inflating utilization to build practices (Vol. 3, p. 279). C. D. Lewis and H.W Keairnes found that for a sample of 5,000 Blue Cross subscribers, 70 per cent of physician-patient contacts were physician-initiated. "Controlling Costs of Medical Care by Expanding Insurance Coverage," *New England Journal of Medicine*, Vol. 282, (25) June 18, 1970. G. Monsma argues that physicians under fee-for-service reimbursement tend to expand output of those procedures yielding the highest net revenue per unit of time input, "Marginal Revenue and the Demand for Physicians' Services," in *Empirical Studies in Health Economics*, edited by H. Klarman, Baltimore, Md., Johns Hopkins, 1970.

[11] "Earnings of Physicians," *op. cit.*, with 1957 data from the earlier version, Health Care Series No. 21, April, 1967. It should be noted that these averages include physicians employed for only part of the year, as well as elderly and semi-retired physicians. They therefore understate average gross incomes from fee practice. Since in addition many fee practice physicians have other sources of income, these earnings data also understate total physician gross earnings.

The increase in professional incomes may come from two sources, increased price per service and increased services per physician. Increased prices may come about because the standard fee for a procedure is raised, or because the physician charges the standard fee in a higher proportion of cases, or because his collections ratio increases. The spread of third-party medical insurance plans and the rapid rise in consumer incomes are both likely to have reduced the incidence of price discrimination, as the poor patient who might previously have been charged little or nothing is now insured and his insurer is billed the full fee. Similarly self-paying patients (either uninsured individuals or recipients of non-covered services) are now likely to be better off than in 1957 so we would expect physician collection ratios to rise. The official price statistics capture the change over time in listed fees, and it has been suggested that they attempt to measure actual fees paid;[14] but it is apparent from the close association of the CPI physicians' fees component and the NHW fee schedule based index that the former is recording only changes in listed fees.

The volume of services per physician may also have risen over this period, although we must be careful to distinguish this from an increase in physician productivity. (Also, we must note that if physicians respond to medical insurance by monitoring their output more carefully and billing separately for procedures once included in a visit charge, this is a price increase, not an output change). If physician practice patterns changed so that a given input of physician time would treat more patients with no increase in other factors of production, that would represent productivity increase. But if the physician refers more patients to the hospital or to a public laboratory, or uses more auxiliary help, and so is able to see more patients, output per physician will be up but total factor productivity may not be. It is a peculiarity of the medical industry that the physican can capture in his income not only all the benefits of his own productivity increases, which in other industries might be passed on to the consumer, but can benefit from the ability to externalize costs of production. The rapid increase in hospital facilities and personnel during this decade has increased output per physician and hence income per physician, and yet the cost of these additional inputs has been entirely subsidized.[15] Thus part of the increased "output per physician" is reflected in rapidly increasing hospital costs; it is not productivity increase but a shift in production patterns to take advantage of "free" inputs (free to the physician-entrepreneur) and to increase returns to a single factor.

---

[12] *Ibid.*

[13] *Canada, Report of the Royal Commission on Health Services,* Ottawa, Queen's Printer, 1964, particularly Vol. 1, Ch. 13.

[14] Armstrong, *op. cit.*

Cutting across both price and output effects is the steady increase in the proportion of physicians who are specialists rather than general practitioners. Since specialists charge more than general practitioners and have higher incomes, this can lead to increases in the incomes of the "average" physician which are more rapid than those of either the GP or the specialist separately. (And thus partly explain the "credibility gap" between the public observing rapid increases and the individual practitioner who feels that his own income is rising less rapidly). But the shift to specialization is not in itself a reason for greater expense. We must ask why specialist incomes are higher. Either specialists produce more output than GPs (because of more use of other inputs, or better training, or whatever) or they charge higher prices for the same output. Thus the trend to specialization can also be subdivided into price and quantity effects. There is also a third possibility, that specialists produce higher "quality" of medical services, in which case that portion of price change which corresponds to increased "quality" is not true inflation. It is impossible to determine how the cost of increased specialization should be broken down into price, quantity, and quality change, particularly since it can be argued that a quality change in a market in which the consumer does not have a free (and informed) choice between two quality standards at different prices does not necessarily represent an offset to inflation.[16]

---

[15] S. Judek reports that the average depreciated value of capital assets "used" in medical practice at the end of 1960 was $8,840 per general practitioner, $6,160 per specialist, and $4,460 per group practice member (*Medical Manpower in Canada*, Ottawa, Queen's Printer, 1964, p. 244). This amount is trivially small, since average gross incomes per fee practice physician in 1960 were $24,288 ("Earnings of Physicians," *op. cit.*) We know that medicine is no longer practiced out of a little black bag; what these figures represent is the minute amount of capital actually *owned* by the physician. Most of the capital he uses is supplied to him free.

[16] A. A. Scitovsky, "Costs of Treatment for Selected Illnesses, 1951-1965", *American Economic Review* 57 (5) December, 1967.

Nevertheless, we can determine roughly how much of the change in physician gross incomes from 1957 to 1969 is a result of the specialization trend, and leave open the question of how much of this is "inflation". In 1957, about 65 per cent of Canadian physicians were general practitioners; by 1969 this had fallen to 50 per cent.[17] Let us assume that the average price of a unit of GP services in 1957 was F_o, and for a unit of specialist services was $(1 + k_o)F_o$ where $k_o > 0$. If we also assume that services supplied are proportionate to the stock of physicians, then a 1957 weighted price index for physicians' services would be:

$$\begin{aligned} P_o &= .65F_o + .35(1 + k_o)\,F_o \\ &= F_o + .35k_oF_o \\ &= [1 + .35k_o]F_o \end{aligned}$$

If by 1969 the price of GPs' services had risen to F_1, and that of specialists to $(1 + k_1)F_1$, and if the services per physician in real terms either stayed constant from 1957 to 1969 or changed at the same rate for GPs and specialists, the 1957 base-weighted price index would be:

$$\begin{aligned} P_1 &= .65F_1 + .35(1 + k_1)F_1 \\ &= (1 + .35k_1)F_1 \end{aligned}$$

But since the proportions of GPs and specialists had shifted, the correct index would now be:

$$\begin{aligned} P_2 &= .5F_1 + .5(1 + k_1)F_1 \\ &= (1 + .5k_1)F_1 \end{aligned}$$

The measured price change is P_1/P_o, the true change P_2/P_o, and the size of the bias due to specialization is $(P_2/P_o)/(P_1/P_o)$ or $(1 + .5k_1)/(1 + .35k_1)$. This has the interesting features that the size of the "specialist mark-up" at the beginning of the period drops out; all we need to know is k_1. We do not know this, but we may guess that it is between 10 per cent and 100 per cent as outer limits. These yield biases of 1.4 per cent and 11.1 per cent respectively. Given a measured price increase of 47.5 per cent, we may say that the combination of price increase plus specialization yields increases in physician incomes of from 49.6 per cent to 63.9 per cent, still a rather wide range. We have, however, a little data on physician incomes in British Columbia which suggest that specialist gross incomes were about 34 per cent above those of GPs in 1969.[18] If we assumed that all of this was due to price difference, k_1 would be about one third. Output differences are hard to allow for here because specialists tend to work fewer hours per week, but to use more inputs of capital and other workers. If a k_1 of one third to one half was accepted as roughly correct, the range of income increases becomes 4.5–6.4 per cent. Combining this with changes in list price yields a total of 54.1–56.9 per cent. Comparing this with the increase in gross incomes of 122.7 per cent, the remaining increase in prices and output is 41.9–44.5 per cent.[19]

---

[17] Data are from *The Canadian Medical Market by Counties, 1969*, Toronto, Seccombe House Research Department, 1970. The split excludes residents and interns, but includes some physicians who were not in fee practice (it is on the Seccombe-narrow definition, see chapter three). Specialists were 37.4 per cent of the total in 1959 so 35 per cent seems reasonable for 1957.

[18] F. Sully, *The Market for Physician Services: A Case Study of British Columbia*, Honors Essay submitted to the Department of Economics, University of British Columbia, May, 1971 (unpublished). Data are based on the Financial Statements of the Medical Services Commission of British Columbia for the Fiscal Year ended March 31, 1970.

Going on from here, we know that in 1969 public insurance plans were paying physicians at percentages of the fee schedule which ranged from 100 per cent in Alberta through 90 per cent in Ontario, British Columbia, and Newfoundland to 85 per cent in Manitoba, Saskatchewan and Nova Scotia. The Department of National Health and Welfare estimates approximately 85 per cent for New Brunswick, 90 per cent for Quebec, and 100 per cent for Prince Edward Island.[20] Moreover, a certain proportion of physician fee income comes from non-insured services on which collection rates may be lower. A figure of about 90 per cent for collections as a per cent of fees for 1969 is probably about right. Some wealthy patients in some provinces may still be charged rates above the fee schedule level, and in Ontario physicians may recoup the 10 per cent not covered by the plan from the patient; these unquantified effects may tend to offset any remaining discounts to the uninsured which physicians still provide. But what are we to assume as the rate of collections in 1957? It is surely lower than the rate introduced by the provincial plans; fewer than a quarter of the Canadian people were covered by third-party medical insurance in 1957. U.S. survey evidence indicates that the ratio of "actual" to "usual and customary" fees was 67 per cent in 1963.[21] If the Canadian figure for 1957 were as low as this, the increase to 90 per cent would represent a 34 per cent increase in the actual price of services. This is enough to explain 70–80 per cent of the increase in physician gross incomes.

This line of argument implied an increase of only about 5–10 per cent in physician "productivity" over 12 years, a period when capital stock and other health workers per physician have been increasing rapidly. But our estimates of price change are very sensitive to the assumptions made about collection ratio. If our end-point guesses of 67 and 90 per cent are too broad, and the time increases were from, say 75–80 per cent, the change is only 13 per cent. On the whole, a 10 per cent change in prices from this effect would seem relatively conservative, and a 20 per cent change quite within the bounds of possibility. Thus a tentative breakdown of the increase in physician gross incomes from 1957 to 1969, would be:[22]

Increase in list prices	$\simeq 43\%$
Increase in specialization	$\simeq 6\%$

---

[19] Note that percentage changes are multiplicative, not additive, a $p\%$ change in price and a $q\%$ change in volume yield a $\{(1+p)(1+q) - 1\}\%$ change in expense. For p, q, small, this is approximately $p+q$ since $pq \to 0$, but for large values the additive approximation fails.

[20] Unpublished data supplied by R. A. Armstrong of the Department of National Health and Welfare, Ottawa.

[21] M. Feldstein, "The Rising Price of Physicians' Services", *Review of Economics and Statistics*, 52, (2) May, 1970.

[22] See Appendix 1–1.

Increase in actual relative to list price	10%–20%
Increase in output per physician	29%–18%

The actual increase in physician prices is the list price increase, multiplied by the collection ratio increase, multiplied by whatever portion of the specialization trend is argued to represent price increase rather than expanded output or improved quality. If one chooses the lower figure for collection increases, and assumes that none of the specialization trend is increased price, the result is a 62 per cent estimate of the increase in medical service prices from 1957 to 1969; but on any less conservative assumptions, the figure is over 70 per cent and quite possibly over 80 per cent.

In evaluating whether this represents "inflationary" rates of increase it is well to keep in mind that the more conservative our assumptions on price change, the faster is the implied rate of growth of output per physician. Thus the 62 per cent rate of increase in medical prices implies (if the shift to specialization is entirely quality change) a 29 per cent increase in output per physician. This increase of two per cent per year is approximately equal to the technical progress component in Canadian economic growth studies,[23] and implies that the fixed input/output ratio model sometimes applied to service industries has no application to medical services. The appropriate price index to compare with medical services is not the service component of the CPI but the all-items index which includes items in whose production there has been technical progress. This index rose only 27.3 per cent over the period. This comparison is valid in spite of the fact that the two per cent increase in output per physician may not be true technical progress. It is true that output per unit of factor input (however measured) in medical services production may not have risen this rapidly (may not have risen at all). But since these additional inputs are supplied free of charge to the physician, from his point of view they may be disregarded in pricing behavior. Those inputs which the physician *does* pay for, as reflected in his practice expense, have been falling slightly as a percentage of gross income over the decade.[24]

Thus, we may conclude that official statistics on the price of medical services substantially understate the degree of inflation which has taken place in the industry. Over the period 1957-1969 the rate of advance of medical prices has been at least double that of the general price level, and has probably been about 4.5–5 per cent per year on the average. The industry thus presents an example of sustained sectoral price inflation. It is interesting to note that these conclusions are quite similar in direction to those derived by Feldstein in the U.S. for the period 1946–66, as he estimated an actual rate of increase of 4.1 per cent per year compared with an official measured rate of 3.2 per cent.[25] The higher rate of increase in Canada may reflect the greater role of third-party insurance plans, the "catching up" behavior by Canadian physicians, or simply the difference in data periods.[26]

---

[23] Economic Council of Canada, *Sixth Annual Review: Perspective 1975,* Ottawa, Queen's Printer, September 1969, Chapter 2.

[24] "Earnings of Physicians", *op. cit.*

[25] Feldstein, *op. cit.*

---

[26] The reader may question the fact that no explicit adjustment for quality change, other than change in the ratio of specialists to general practitioners, is embodied in these estimates. It is traditional in studies of price change to note that goods and services in a price index are *assumed* homogenous over time but really are not; this year's radio is better than last, and part of the price change reflects this improvement.

We have disregarded this effect primarily because no decent information exists on the quality of physicians' services *as such*. It is obviously true that the technological capacity of the health industry has been increasing rapidly and that this has been a factor in driving up expenditures. (D. D. Gellman, "The Price of Progress: Technology and the Cost of Medical Care," *Canadian Medical Association Journal*, Vol. 104, March 6, 1971). But technical advance which creates new "products" in the form of new treatments and life-sustaining procedures represents increased application of physician time, other personnel, and capital equipment to the production of "health". It should be reflected in increased levels of overall health expenditure, as "new products" enter the industry output mix, but should not influence the measurement of the price of a particular input component such as physicians' services.

On the other hand, if a particular procedure becomes more productive of health, due to, e.g., an improvement in physician knowledge or surgical technique, so that the "health" received by a patient from a particular physician contact is increased, would we say that the quality of physician services had risen? Whether this quality increase should be used to discount increases in service prices, depends on our standpoint. From the consumer's viewpoint the "product" he receives is clearly "better", so part of its increased price is due to this quality change and should be discounted. From the point of view of the supplier, however, if the improvement is costless *to him* in the sense that it is a result of better medical education or a learned innovation which does not increase the time and effort required to perform a given procedure, there is no reason why it should be reflected in an increased price. Such an increase merely appropriates to the supplier the whole of the technological advance, and if the focus of our interest is supplier price and income behavior it seems proper to treat this as price change.

APPENDIX 1–1

ANALYSIS OF THE ESTIMATES AND FORECASTS FROM THE TASK FORCE REPORTS[1]

The price estimates in this chapter may be compared with undocumented estimates and forecasts presented in the third volume of the Task Force Reports, pp. 213–15. These break down the annual increases in costs per capita of physicians' services over different time periods into the following categories:

	1957–66	1966–70	1970–80
	(percentage increase per year)		
Increase in physicians per capita	1.0	1.5	1.6
Increase in specialization	0.4	0.4	
Changes in technology	0.2	0.2	2.1
Other utilization increase	1.4	1.5	
Price increases	2.6	6.6	3.3
Reduction in uncollectable accounts	1.5	3.0	—
Total per year	7.3	13.8	7.2
Increase over period	88.4	67.7	99.5

These estimates are presumably based on Department of National Health and Welfare estimates, although more recent data published by the latter[2] on per capita expenditure on physicians' services yield:

		percentage increase	
1957	$16.30	85.2	1957–66
1966	$30.18	43.0	1966–69
1969	$43.15	164.7	1957–69

These do not quite square with the above data, which indicate percentage increases of:

1957–66	88.4
1966–69	47.4
1957–69	177.7

although the discrepancy in the latter period is explained if increases are expected to accelerate in 1970. Separating out the increases in the number of physicians, the Task Force data imply that gross payments per physician can be broken down as follows:

	1957–66	1966–69	1966–70	1957–69
	per cent			
Change in output per physician	13.3	4.6	6.1	18.5
Change in nature of output (specialization and technical change)	5.5	1.8	2.4	7.4
Change in price	43.6	31.7	44.3	89.1
TOTAL	71.2	40.2	56.8	140.0

---

[1] Canada, Department of National Health and Welfare, *Task Force Reports on the Costs of Health Services in Canada*, Ottawa, Queen's Printer, 1969.

[2] *Expenditures on Personal Health Care in Canada*, Canada, Department of National Health and Welfare, Research and Statistics Memo, Ottawa, October, 1970.

Subsequent published data from the Department of National Health and Welfare indicate that these forecasts are too high, as the percentage changes in physicians' gross earnings (see footnote 6, chapter one) are:

1957–66	1966–69	1957–69
69.3	31.5	122.7

Nevertheless, if the Task Force data are scaled down appropriately, they indicate 15.6 per cent change in output, 4.8 per cent change due to specialization and technical change, and 84.4 per cent change in price over this period. (The adjustment procedure is to take the cube root of the ratio between the two indexes $\sqrt[3]{222.7/240.0}$, and multiply it successively by 118.5, 107.4 and 189.1. The resulting values, less 100 in each case, yield percentage changes totalling 122.7.) Comparing these with the estimates in chapter one, it is clear that the Task Force estimates are quite similar. Even if all the Task Force error were in prices, their estimates would still imply 75 per cent price change.

The implications drawn by the Task Force reports from these data are, however, entirely different. The authors are apparently unaware that it makes no difference to aggregate price levels (or to average supplier incomes) whether payments per unit of service rise because of increases in list prices or because of increases in the ratio of actual prices paid to list prices. This is apparent when they distinguish between changes in collection ratios and changes in list prices, and refer to the latter as "the price of services". Thus they fail to observe that the true increase of medical prices from 1957-66 was, on their measures, 4.1 per cent per year or 43.6 per cent while the Consumer Price Index rose only 18 per cent and the medical care component of that index rose 25.9 per cent.

By failing to recognize the inflationary behavior of medical care prices (note that this is *after* adjustment for specialization and technical change) prior to 1966, the Task Forces are led to focus on the 1966–70 period. They project that after 1970, the rate of change of medical prices will fall to 3.3 per cent per year, or about three quarters of its annual value from 1957–66 when consumer prices were rising only 1.9 per cent per year. Even if the rate of inflation economy-wide were held at its 1957-66 level, it is hard to see why physicians would seek slower rates of real income growth under government-run insurance plans in the 1970s than they achieved in the 1957-66 period. The effect of a reduction in the rate of implicit price change through rising ratios of actual to list prices will be a rise in the explicit price increases through fee schedule change, unless the Task Forces are postulating a model of physician behavior in which prices are set relative to a target average income which is a fixed mark-up over all other, or all other professional incomes, and which just *happens* to have been reached at last during the 1966-70 period, so that physician prices will henceforth move with the economy. Otherwise, their forecast can only be validated if a major shift in physician pricing behavior takes place, and they present no evidence that this will happen.

APPENDIX 1–2

A PRICE IS A PRICE IS A PROXY

The discussion in chapter one has revolved around different "official" price indexes for physicians' services, and their relation to one another and to the behavior of physician incomes. Unfortunately the available price series are of rather peculiar construction and are generally ill-suited to the purposes for which they are employed. It is therefore necessary to go through the rather humbling details of just how such statistics are produced and why they are likely to bias the conclusions drawn from them.

There are many ways of generating a price index, all of which involve differing treatments of the problem of weighting the price changes of individual commodities to produce an overall summary index. The two fundamental approaches are to use weights which are fixed over time and calculated in some base period, and to use weights which vary over time. Thus if we denote P_{ij} and Q_{ij} as the price and quantity respectively of the ith distinct commodity or service included in the index measured at time j, we could measure the price change from period zero to period one by a Laspeyres' index using base period quantity weights to yield:

$$L_1 = \frac{\Sigma P_1 Q_0}{\Sigma P_0 Q_0} \times 100$$

(where summation is over i, $\Sigma P_1 Q_0 = \sum_{i=1}^{n} P_{i1}\, Q_{i0}$ for an n-commodity index).

Alternatively we could weight the price changes over time by their importance in the current period and develop a Paasche index using current weights,

$$P_1 = \frac{\Sigma P_1 Q_1}{\Sigma P_0 Q_1} \times 100$$

and these indexes will not in general give equivalent results unles Q_1/Q_0 remains constant over all commodities.

The choice of index is not arbitrary, however; it depends on one's purposes and objectives. A Paasche index will shift if the weights change over time even if $P_{i0} = P_{i1}$ for all i, simply due to changes in the quantities involved. Thus indexes designed to indicate pure price shifts, such as the Consumer Price Index, are constructed on base period weights so as to be insensitive to quantity shifts.[1]

---

[1] Observe that the base period for weighting an index need not be the year in which the index is set equal to 100. One can construct an index $L_j = \frac{\Sigma P_j Q_0}{\Sigma P_0 Q_0} \times 100$ for which $L_0 = 100$, but then convert it to base k by dividing all values by L_k. The new index L_j will then be an index for which $k = 100$ but the quantity weights are period 0. Thus the Canadian Consumer Price Index has 1957 weights but is equal to 100 in 1961.

But this index is not the correct choice if one wishes to calculate a "real volume" series (in constant base period prices) by deflating a current value series. Thus if we observe the current dollar volume of output

$$V_J = P_J Q_J$$

and we wish to calculate:

$$Q_J = P_0 Q_J$$

then, it is obvious that we must deflate V_J by a Passche index,

$$Q_J = V_J/P_J \times 100,\ P_J \overset{\text{must}}{=} \frac{\Sigma P_J Q_J}{\Sigma P_0 Q_J} \times 100$$

in which price changes are weighted according to their current importance in the pattern of commodities and services. If a Laspeyres' index is used, our quantity series becomes:

$$Q'_J = V_J/L_J = \frac{(\Sigma P_J Q_J)\ (\Sigma P_0 Q_0)}{\Sigma P_J Q_0}$$

Now Q'_J is the product of $V_0 (= \Sigma P_0 Q_0)$ and a Paasche index of Quantity, $\frac{\Sigma P_J Q_J}{\Sigma P_J Q_0}$, using current period price weights. This makes it apparent that we could derive a Paasche index for the quantity of care provided by deflating the current value series by a Laspeyres' index and taking the result as a ratio to the base year. The trouble with this procedure, however, is that the elements of this time series are then not comparable with each other. They can only be measured each relative to the base year, with which they share common weights. A measure of "real output", based on a Paasche index, may fluctuate from year to year due to price changes and is thus unsuitable if we are to measure with it the flow of medical services per head of population or the physical work load per physician.

These considerations will not be very important if Laspeyres' and Paasche indexes tend to move closely together and to deviate in a random fashion. In fact, however, their deviations will not be random if deviations of prices and quantities from their base values are systematically inter-related. If, for example, the demand for a commodity or service falls, or rises less rapidly over time, when its price rises rapidly (the standard economic downward-sloping demand curve), then the Laspeyres' index will show larger price increases, or smaller drops, than the Paasche. This is because it tends to give larger weights to those commodities whose prices have risen most rapidly, or fallen least rapidly, than does the current-weighted index. On the other hand, if the observed set of price quantity pairs reflects movement along a supply curve, then we will find (relatively) rapid price increases associated with (relatively) rapid quantity increases and the Paasche index will lie above the Laspeyres'.

The Consumer Price Index for physicians' fees is a Laspeyres' index using 1957 base weights and equal to 100 in 1961. It is based on a relatively small sample of physicians in each of a number of cities, and then aggregated to the national level using 1961 city weights. These weights have been shifted somewhat over time to reflect the introduction of universal health insurance in

Saskatchewan (October 1963), British Columbia (August 1968), all others except Quebec, New Brunswick and Prince Edward Island (October 1969), Quebec (November 1970), and by April 1971 medical care dropped out of the CPI entirely.[2] It was intended that the CPI physicians' fees index reflect actual changes in prices, however, as noted above, it appears to be primarily a list price index. It is difficult to regionalize the CPI index because it applies only to cities, some provinces are wholly unrepresented, and a province with one or two cities included may have only a handful of physicians sampled. Yet provincial measurement is vital because fee schedule determination is carried out at the provincial level, and both physician income and consumer medical expenditure are published at the provincial, not the city level.

Thus the CPI physicians' fees component is an unsatisfactory price index for deriving a quantity series by provinces because it is base-weighted rather than current-weighted, because it is not compiled on a provincial basis and does not represent certain provinces at all, and because it is based on extremely small local samples of both physicians and procedures. Moreover, it focusses on general practitioners alone although this group has been losing ground rapidly to specialists and is now outnumbered by them. Unfortunately this series seems to be the only measurement of medical prices carried out by Statistics Canada, and is used in the National Accounts Division to deflate physicians' fees in deriving that component of constant dollar GNP. The use of a Laspeyres' index for this purpose could only be defended if the quantities of different types of physicians' services had moved in roughly equal proportions since 1957; unfortunately this is not the case. We know that the volume of obstetrical services has moved down sharply in absolute terms from 1957 to 1969, while rates per 100,000 population of appendectomy and house calls have both gone down. Office calls have increased sharply in rate and absolute volume.[3] Since the prices of these different services have also moved divergently, it is clear that a Laspeyres' price index will give faulty results when used as a deflator to arrive at constant dollar output.

Paasche indexes, using current period quantity weights and a relatively detailed breakdown of physicians' services, are compiled by the Department of National Health and Welfare, Research and Statistics Directorate. These indexes are specific to each province, begin in December of 1963, and refer to list prices for care as reported on provincial fee schedules (Quebec is excluded down to 1970 since no fee schedule was available). The fee schedule components sampled were originally 55 in number but have been expanded to about 350 covering both general practitioners and specialists, so these indexes are very comprehensive. The earlier period quantity weights are somewhat shaky in those provinces and years for which no quantity or utilization rate data were available; but the use of approximate quantity weights from medical insurance plans in "similar" areas is an entirely defensible procedure for bridging this gap.

---

[2] Details of these shifts were provided by the Retail Prices Division, Statistics Canada.

[3] In particular, since the change in office call prices (1961-1970) has been greater than that of any other component of the physicians' fees index, it is clear that a (correct) Paasche deflator would indicate larger price increases and a smaller volume of care supplied over this period than does the presently used deflator. Thus the medical care component of the constant dollar GNP is overstated.

Unfortunately when the within-province indexes are aggregated to a national level certain problems emerge. Each province index is based on December 1963 = 100, and a national index is compiled from these using 1964 base period *population* weights. This procedure has two weaknesses: it combines current weighted provincial indexes with base-period weights across provinces, and it uses population weights rather than quantity of service weights although we know that the physical volume of medical services per capita varies considerably from province to province.

Moreover, the provincial series used are all on separate bases and are not directly comparable with one another. At later points in time (September 1, 1968, and the same date in 1969) the Department has prepared quantity weighted indexes of fee schedules across provinces, using Ontario as a base value of 100, and comparing both listed fees and fees actually paid by provincial insurance plans. Combining this cross-sectional slice with the intra-province indexes, one can compute a set of indexes based on Ontario (December 1963 = 100) running from 1963 to 1970, for each province. Then if one accepts the 1964 population weights, one can convert this to a Canada (December 1963 = 100) base set of indexes. This will be a set of list price indexes; the equivalent procedure cannot be carried out using the "proportion of list paid" cross-sections because these proportions have varied within provinces over time. And finally the quantity weights used to derive the cross-province indexes of fee schedules do not correspond to the quantity weights used in any of the intra-province indexes.

Thus the National Health and Welfare data gives one a relatively short but theoretically correct index for each province; as soon as these are aggregated to a national index or compared over time and across provinces the data becomes suspect. For the purpose of deriving quantity series or of measuring relative price levels of medical services over a long period of time or across provinces, all of the officially prepared price data are suspect.

chapter two

MODELS OF PHYSICIAN-PRICING BEHAVIOR

The rapid inflation of medical care prices requires some form of analysis and explanation if we are to determine whether it is likely to continue and whether it can be mitigated by any form of policy intervention. It might be argued, for example, that the behavior of prices over the last decade was a one-time response to the spread of third-party insurance plans, and would not continue in the future. This position may underly the hopeful prediction of the Task Force (see Appendix 1-1) that price increases will be much less rapid after 1970. This argument requires a demand-oriented model of price formation in which the introduction of insurance plans represented a major increase in quantity of services demanded (due to the fall in prices paid by consumers) interacting with a relatively fixed supply of services and leading to a rapid price increase. Since price neither rations demand (under insurance) nor expands supply (in the short run), this model is hard put to explain why prices should stop rising. An alternative equally plausible model might be that physicians set prices so as to maintain a certain growth rate in incomes, and that during the last decade fee schedule increases have been restrained since collection ratios were rising. Over the decade of the 1970s, the rise in number of physicians per capita will spread the existing medical work load more thinly, and there will be little scope for increases in collection ratios. Thus, if physicians are to maintain the rate of growth of their income, they will have to raise listed prices still faster and/or increase their volume of work. This would lead us to expect more rapid price rises after 1970. The point of these opposite predictions is that one requires some model of price formation in this industry to make any prediction about future prices and that this model can only be evaluated if it is made explicit.

As an example, we could outline a possible model of the medical services market based on the static textbook model of the market for any commodity supplied competitively subject to the usual assumptions. If we designate P as the price of medical services, Q_d as the demand for services, and Q_s as the supply, then schematically:

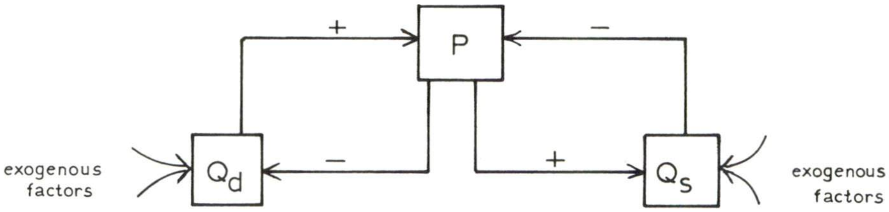

Here the price of services has a negative influence on the demand for them and a positive influence on their supply (movements along supply and demand curves); while shifts in demand and supply caused by exogenous factors have positive and negative effects respectively on price (shifts in demand and supply curves). This rather simple-minded model leads one to look at medical price inflation in terms of demand shifts; thus, one could represent the introduction of universal third-party medical insurance as erasure of the negative arrow from P to Q_d. To argue that this will predict a once-and-for-all shift in P, however, is to misinterpret the equilibrium process. If this arrow is removed, Q_d should rise to the level of medical demand when (money) cost is zero: this will not be infinite because medical care has access, time and trouble costs to the consumer which are not represented in P. The model then predicts that P will rise until Q_s equals the new higher Q_d.

How much P must rise depends on the elasticity of supply of physicians' services which depends both on the rate of new entrants and on the output of existing physicians. The rate of entry is primarily determined by the availability of medical school places and on the rate of in-migration of physicians, neither of which is very sensitive to service price levels. Output of existing physicians may either rise or fall in response to higher price levels.[1] Thus the demand model predicts that prices will continue to rise in the market until the supply of medical services *per capita* (which may or may not be supplied by physicians) rises to eliminate the "excess demand" for care.

This is a popular model of the medical care market, quite consistent with traditional economic theory, in which rising price is a result of exogenous demand increases and constrained supply. Unfortunately this model is difficult to reconcile with the available empirical data on prices and service flows, and rests on very weak theoretical underpinnings. In the first place, we have *not* observed constrained supply of medical services during the last 12 years in Canada. On the contrary, the stock of physicians *per capita* has risen 17.2 per cent and output per physician, as noted in chapter one, has probably risen even faster. Medical services *per capita* have risen between 20 and 50 per cent over this period, depending on one's assumptions. In the same period, demographic factors underlying need for care should have reduced demand. The proportion of the population over 65 has remained almost unchanged, rising from 7.6 to 7.7 per cent, while the proportion of children under five has fallen from 12.4 to 9.2 per cent and the total fertility rate has fallen from 3.9 to 2.4, indicating a sharp drop in obstetric demand. The high medical-care-using portions of the population have thus been static or declining.[2]

---

[1] This is the well-known interaction of income and substitution effects. M. Feldstein has tentatively concluded that in the U.S., supply of services responds *negatively* to price. "The Rising Price of Physicians' Services," *Review of Economics and Statistics*, Vol. LII, (2) May, 1970.

Cross-sectional evidence, such as it is, is also inconsistent with the "traditional" model. Price data for Canada presented in chapter three indicate that medical service prices are higher in provinces with high physician: population ratios (British Columbia, Manitoba) than in low (Saskatchewan, Prince Edward Island). These data are inappropriate in that they cover listed fees rather than prices paid; the Research and Statistics Branch of the Department of National Health and Welfare has prepared Indexes of Benefits paid by provincial medical associations which indicate that in 1969 the highest prices received by physicians were in B.C., Alberta, Manitoba, and Nova Scotia. Data presented in chapter three indicate that all are relatively high in medical service availability as measured by physician stock *per capita.* U.S. data also tends to indicate a positive correlation between price and physician availability, studies by M. Feldstein and J. Newhouse both yield this "perverse" result.[3]

These findings can of course be rationalized. The cross-section data may indicate differences in income and "tastes" for medical care; regions with higher exogenous demand per capita bid up prices and attract more physicians. Demand has risen over time in Canada due to rising incomes, changing "tastes" and particularly the spread of public and private insurance plans. In this context it is worth noting that dental services are usually found to be more income elastic than medical,[4] and yet no corresponding increase in dental expenditures has taken place. Dental expenditure has moved from 0.35–0.38 per cent of personal income in Canada in the period 1957–69 while medical expenditure has gone from 1.11–1.49 per cent.[5] As noted in chapter one the medical expenditure increase does not include the even more rapid expansion of hospital-supplied services. As for the impact of expanded health insurance programs, in 1957 *per capita* spending on health care in Canada was $16.36 and by 1967 it had risen to $33.63 or by 106 per cent. Over the same period, enrolment in the medical insurance carriers affiliated in Trans-Canada Medical Plans rose from 2,992,626 to 6,001,057. In 1962 Saskatchewan initiated a universal public plan, so adding Saskatchewan's population in 1967 yields a figure of 6,959,000 covered in 1967. Total claims expense for this group was $51,224,481 in 1957 or $17.12 *per capita*; for Trans-Canada Medical Plans plus Saskatchewan in 1967 total expenditure on physicians services was $243,223,000 or $34.95 *per capita*, an increase of 104 per cent or almost exactly equal to the increase for all Canadians. In both years, expenditure by the insured was less than five per cent above the Canadian average.[6]

---

[2] Canada, Dominion Bureau of Statistics, *Vital Statistics 1969*, Ottawa, 1972.

[3] M. Feldstein, *op. cit.*, and J. P. Newhouse, "A Model of Physician Pricing," *Southern Economic Journal*, 37, (2) October, 1970.

[4] See, for example, R. Anderson and Lee Benham, "Factors Affecting the Relationship Between Family Income and Medical Care Consumption," in H. Klarman, Ed., *Empirical Studies in Health Economics*, Baltimore: Johns Hopkins, 1970.

[5] Canada, Department of National Health and Welfare, "Expenditures on Personal Health Care in the Provinces of Canada," *Research and Statistics Memo*, Ottawa: November, 1970.

Again these observations may be rationalized. The insured populations may not be representative of Canadians generally so that their expenditures might have been below average if they were not insured. (Of course one might also expect high risk individuals to self-select *into* insurance plans!) The cross sectional income elasticities of demand for physicians' and dentists' services need not be the same as time series elasticities. Trans-Canada Medical Plans did not include all health insurance carriers and may have imposed utilization controls. All of these possibilities must be admitted. But a theory which consistently fails to explain observed data and which must appeal to unobservable differences in "tastes" of compared populations becomes an irrefutable and an uninteresting theory. The demand-pull, supply-constrained model of medical price inflation appears to fall into this category.

And indeed this is not surprising. The traditional model of consumer demand postulates that each consumer's demand for a commodity is a function of its price, prices of all other goods, his income and "tastes" which are assumed stable over time. If other prices and income are stable, it can be shown that (with a few more assumptions) the quantity of the commodity purchased by him will fall as its price rises. The theory rests, however, on strong assumptions about information and rationality on the part of the consumer. In the case of medical care the model assumes that the consumer knows (1) what his health problem is; (2) what forms of care are appropriate; (3) the relative competence of all available suppliers to provide care, and (4) the total price of a treatment provided by each possible supplier. The unreality of these assumptions is readily apparent, and explains why consumers in fact delegate to suppliers the responsibility for deciding what care, and how much, should be consumed. The supplier becomes able to a significant extent to influence the demand for his own services. This is not to say that the partial derivative of quantity with respect to price in the consumer's demand function ceases to be negative. Rather the information gap between consumer (patient) and supplier (physician, hospital) leads to this partial relation being very sensitive to shifts in the patient's perceptions of his health state and of the capacity of medical technology to improve that state. These perceptions are partly formed by supplier behavior, which in turn will depend on the price paid for supplier services. It is therefore quite consistent that changes in price operating through the supply side should shift the partial demand curve in such a way that the total response of quantity demanded to price could be positive, negative or zero.[7]

---

[6] Data are from Trans-Canada Medical Plans Annual Reports for 1957 and 1967, supplied by Mr. C. H. Shillington, General Manager of Healthco, Toronto; and from Canada, Department of National Health and Welfare "Earnings of Physicians in Canada, 1967," Supplement to Health Care Series No. 21, Ottawa, November 1969.

A more realistic model of physician behavior might therefore be one which recognizes explicitly the role of physicians in determining the demand for their own services. In particular, physicians might seek individually to raise demand when they feel their incomes are too low or they find themselves underworked, and they might seek to raise prices (acting either as individuals or as a cartel) whenever they find their incomes to be too low.[8] This assumes that physicians as a group do not maximize their incomes at each point in time, and is consistent with the common finding that the elasticity of demand for medical services is less than unity.[9] In influencing demand it is not necessary for physicians to turn away critically ill patients or to hoodwink the healthy in defiance of professional ethics; all that is needed is that more time, effort, and care be spent with each presenting patient when the apparent exogenous workload per physician is reduced. The volume of services supplied will depend on the paramedical personnel and physical facilities available to work with physicians as well as on the stock of physicians in an area, since these will enable the physician to do more work with a given input of his own time and effort. The physician does not act as a price taker and determine what volume of services he will offer at each of a set of possible prices; rather he responds to price and income as well as to professional considerations in advising the consumer as to how much care should be consumed. Then he meets the resulting demand.

---

[7] The crucial role of information in this market has been stressed by J. L. Migué, "Point de Vue d'un Économiste sur le Rapport de la Commission Castonguay-Nepveu sur les Professions," *Industrial Relations*, 25, (3) and Migué and G. Bélanger, *La Santé: Analyse Économique* (mimeo). Groupe de recherche sur l'économie du secteur public, Universités de Quebec et Laval, Quebec, 1971 Ch. IX. The argument is sketched in R. Evans, "Information and Incentives: Peculiarities of the Health Care Market," *B.C. Studies* No. 13 (Spring, 1972). R. G. Beck emphasizes the potential role of supplier behavior in models of the demand for medical care, *An Analysis of the Demand for Physicians' Services in Saskatchewan*, unpublished doctoral dissertation, University of Alberta, Edmonton (Spring, 1971). The conclusions of G. Monsma, *op. cit.*, imply that suppliers manipulate demand to maximize their net receipts. Yet the literature abounds with mis-specified models in which price is the only nexus between demand and supply.

[8] This model is implicit in references in the Task Force Reports, *op. cit.*, particularly the Task Force on the Price of Medical Care, to the setting of prices so as to yield desired physician incomes (pp. 219–230) and the over-servicing which occurs in communities (pp. 257–262) where physicians are competing for practices. Cross-section evidence from British Columbia indicates that the total volume of service per capita responds to physician supply with an elasticity of about $+0.85-0.9$, suggesting that physicians have strong influence, but not full control, over demand. R. Evans, E. Parish, and F. Sully, "Medical Productivity, Scale Effects, and Demand 'Generation', " University of British Columbia Department of Economics Discussion Paper No. 79 (June, 1972). Interestingly, this line of argument traces to the Flexner Report in which the ill-effects of excess medical activity resulting from too many physicians are stressed as an argument for reducing supply. A. Flexner, *Medical Education in the United States and Canada*, Bulletin No. 4, Carnegie Foundation for the Advancement of Teaching (New York, 1910).

[9] This finding is not of course universal, a discussion of the demand literature is given by Cliff Lloyd, "The Demand for Medical Care: A Selective Review of the Literature," University of Iowa Working Paper Series No. 71–9 (April, 1971). The usual way of reconciling small price elasticities with profit maximization is to assert that each *individual supplier* in a market faces an elasticity of demand equal to or greater than unity. The implied picture of physicians actively engaged in price competition with one another is not one which we find compelling as a view of reality!

Schematically, a more extended model could be represented by the diagrams in Figures 1 and 2. Here, the quantity of service supplied (Q) is determined by the interaction of population (POP) and the per capita demand for services (q) while the average work load per physician is simply the ratio of Q to MD, the stock of practicing physicians. Q depends positively on POP and q; W depends positively on Q and negatively on MD since as the stock of physicians expands the average work load of each falls (*ceteris paribus*, of course).

But though physicians may work at whatever level of activity the patient population generates, they are assumed to have some notion of optimal or desired work load (W^d) and it is the difference between this desired workload and the load which the physician actually works which determines whether he perceives a shortage or a surplus of physicians ($S = W - W^d$). This desired workload is assumed to depend on net income per physician (N) and price of physicians' services (P) in the customary way predicted by the work-leisure trade-off, i.e., a rise in N for P constant leads to a reduced W^d (demand for more leisure) and a rise in P for N constant leads to an increase in W^d (willingness to supply more labor at a higher price). The "backward-bending supply curve" for physicians' services found by Feldstein[10] in the U.S. combines these two effects since a rise in price in an industry with inelastic demand is associated with an increase in income.

The perceived shortage (S) has several effects. In the short run it will tend to depress q since physicians will be less prone to order extra work for patients, perform unnecessary or marginally necessary operations, or recall patients for extra visits, if they already feel overworked. On the other hand, a physician who feels less pressured can easily justify extra time and care as being in the patient's best interest and consistent with "higher quality". Moreover, the non-pecuniary costs to the patient of seeking medical care are associated positively with the workload per physician, since search and queuing costs are higher when physicians are busier. Travel costs for the patient depend not on physician workload but on physical proximity; if increases in the physician: population ratio are accompanied by even geographical distribution of physicians then patient travel costs will go down and q will rise correspondingly. If the rise in MD is proportionately greater than the rise in q, then a fall in W will be associated with the fall in travel costs and the rise in q, but there will not be a causal connection from W to q through travel costs. A large S may also serve as a signal to physicians to raise prices (even if N is adequate) in order to ration demand.[11]

Over the longer term, however, we might expect that relatively high values of S would tend to discourage physicians from entering an area and encourage early retirement or migration (for any given net income N). This could be either

---

[10] Feldstein, *op. cit.*

[11] The shortage of physicians is identified as a discrepancy between desired and actual physician workloads, it is a shortage perceived by physicians. The shortage perceived *by the patient* will be a result of the downward pressure on q exerted by physicians who feel overworked, i.e., long queues, refusal to perform certain procedures or activities, or to take on new patients. If all physicians had complete control over q, S would equal zero. But if this control were achieved by *downward* pressure on q, patients would perceive shortages. The problem is that in this market some physicians may be exerting downward pressure on q while others exert upward. The imbalance of "exogenous" workloads will be unobserved and will have little effect on incomes or prices.

FIGURE 1

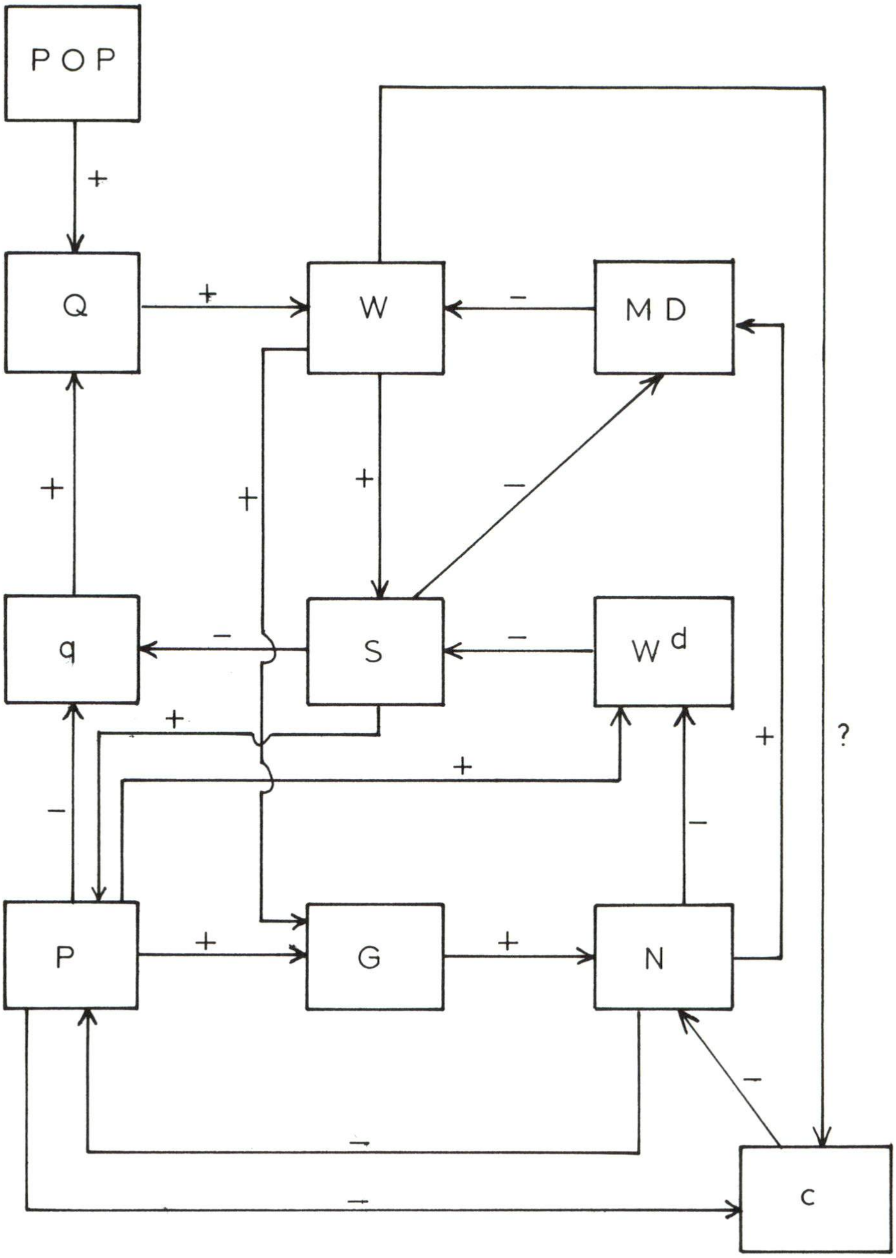
POP
+
Q
+
W
–
MD
+
+
–
q
–
S
–
W d
+
+
+
+
?
–
–
P
+
G
+
N
–
–
–
c

Informetrica LIMITED

FIGURE 2

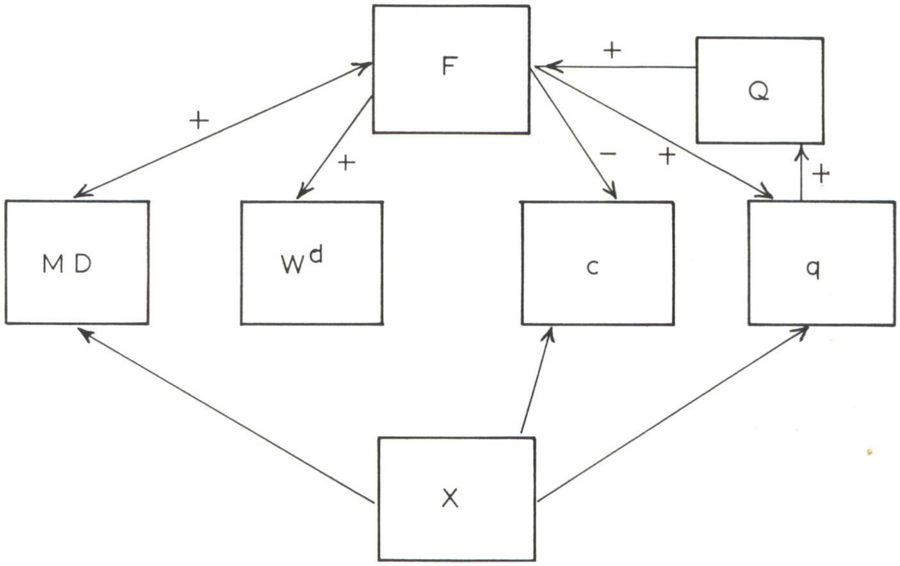

VARIABLES

MD	Stock of physicians, absolute numbers.
W	Workload per physician in physical terms.
G	Gross professional income per physician, dollars.
c	Expenses of practice as a proportion of gross income.
N	Net professional income per physician, dollars $N = (1 - c)G$.
W^d	Physician's desired workload, in physical terms.
S	A measure of shortage (may be positive or negative) equal to the average value of $W - W^d$ across all physicians.
q	Rate of utilization of medical services per capita.
POP	Total population.
Q	Total volume of medical services supplied.
P	Price of medical services (index form).
F	Stock of public medical facilities made available to private physicians.
X	Various other exogenous factors.

a selection away from positions with excess workloads, a desire for a quieter life, or a reaction to the strain of constantly providing less care to each patient than is felt to be medically desirable. Thus we might expect that over the long run, shortages encourage net physician out-migration and tend to reduce the stock of physicians. This creates the possibility of a "vicious circle" such as is sometimes said to characterize rural areas: a low value of MD relative to Q tends to raise W above W^d, increase S, and exert downward pressure on MD. This further raises W relative to W^d, while at the same time q falls and the population receives relatively fewer medical services per head. In the in-migrant areas, the opposite effect is at work.[12]

There are, however, countering effects in the model and presumably in the real world as well. As W rises, for given price levels, so does the gross income per physician (G). This gross income tends to increase net income per physician (N) as well, although its effect is modified by c, the proportion of gross income which goes in expenses of practice: $N = (1 - c)\ G$ where $G = PW$. But the impact of W on c is not *a priori* clear, it depends on the production process for each practice. We might expect a physician with a single office and a nurse, to find that, over a range, his expenses fluctuated very little with workload and so c fell as W rose. However, the radiologist hiring many technicians and running several offices would expect that as his practice expands, his expenses of practice rise relative to his gross income. Net income would still rise, but more slowly.[13] For given prices, therefore, rises in W tend to increase G and thereby N, and we would expect average net income levels to exert a strong pull on new physicians. Thus, MD should be a positive function of N, *ceteris paribus*. This might be regional N relative to some national average, or relative to other occupations, or relative to internally generated expectations, but in any case N should affect in-migration positively. As previously mentioned, however, the work-leisure trade-off suggests that higher values of N should lead to lower desired workloads or lower W^d.

The last variable in the model, P or the average price of physicians' services, clearly exerts a positive influence on gross income per physician G and (less clearly) on desired workload W^d. It has a negative effect on c since a rise in medical prices has a proportionate effect on G, but no effect on expenses of practice. c tends to fall, being the ratio of expenses to gross income. Similarly, P tends to reduce q through the classic route of the elasticity of consumer demand, although this effect is very much weakened by third-party insurance plans as well as by the very limited responsiveness of consumers even in the self-paying sector due to uncertainty, lack of information, and the delegation of decision-making power to the physician.[14] One might also hypothesize that reimbursing agencies, squeezed by rising medical prices, would exert closer controls over utilization and so reduce q, but in the Canadian context such pressures on q may be treated as exogenous policy changes. The determination of **P** is assumed to be influenced by physicians net income targets, as P will be raised when physicians feel their incomes are "unsatisfactory". This is not inconsistent with price discrimination since such a strategy merely amounts to explicit recognition of the dual role of P. Raising P has a direct positive effect on G but an indirect negative effect if insurance is incomplete (q falls, as does Q, W, and G for MD constant), so that the pricing strategy which maximizes N would be one which charged a different P to each individual according to his q(P) function. If an indemnity-type insurance plan is introduced, P may be raised by the amount of the indemnity until the old q is reached; but the rise will be motivated by new and higher possible N values. Under third-party full coverage insurance the upper limits on P are less clear because q becomes almost independent of P; hence, P must depend on the relation between N and some shifting target value. The analysis or prediction of pricing behavior then depends on one's ability to specify the form of the P(N) function.

---

[12] Murray Brown has argued that in fact excess workloads in an area will *attract* physicians since they indicate high initial workloads and incomes for newcomers and lower practice "start-up" costs. This is quite plausible. The model presented here, however, postulates a negative effect from S to MD *for given values of N*, and is it unlikely that physicians will enter a high workload area unless they expect a higher income than elsewhere available. Thus we find rural "shortage" areas with high rates of new entry and of turnover, and overall low physician density, see, for example, H. Scarrow, "Medical Manpower Survey 1968-69," B.C. Health Resources Council Technical Report M-1 (Vancouver, 1969).

[13] In fact, the evidence in Canada suggests that the first effect predominates, as expenses of practice as a percentage of gross income fall substantially from lowest to highest physician income class. These are reported in "*Earnings of Physicians in Canada 1959-1969*", Canada, Department of National Health and Welfare, Health Care Series No. 28, Ottawa, October 1971.

In the next panel, Figure 2, certain variables from the model above are selected as being particularly sensitive to exogenous effects. The stock of public medical, hospital and other health facilities F (which is hypothesized to depend *inter alia* on the population demand for medical services Q) will tend to influence MD, q, c, and W^d. Desired workload is increased because more of the work involved in a given case can be spun off to the staff at a public hospital or laboratory—the physician can generate more billings for the same effort input. Expenses of practice will tend to fall for the same reason, more capital is supplied by the public. The volume of medical services will rise because with more and more diverse facilities available the range of possible procedures is extended and more conditions can be treated, also indirect access costs to facilities are reduced. These effects are independent of possible increases in q which depend on physician behavior—rising W^d for given W causes S to fall and thus q to rise. Finally, a broader range of available facilities is likely to attract physicians (apart from income effects), because the visibility and medical prestige of the region is enhanced.

Exogenous factors are also important, as physician locational preferences interacting with regional characteristics influence MD; population age structure, education, income, and occupation, as well as climate, affect q; c depends on prevailing labor market conditions as well as distance from suppliers of medical inputs; and W^d will vary with advances in the technology and management of medical practice. These factors could all be attached to Figure 1, but they would clutter the diagram and they will not be used in subsequent analysis. The model will focus on the role of income and workloads in determining physician location, or the role of physician availability in determining utilization; but this does not imply that there are not other, perhaps more important, factors influencing these variables. They are disregarded because they are hard to control—one cannot do much about population age structure or physician preferences for pleasant climate—and do not depend on other variables in the model.

---

[14] As noted above, agreement on this point is widespread but not universal (see note 9 above).

Writing out the extended model as a series of equations, we get:

a price-determining equation,

$$P = P(N, N^T, S) \tag{1}$$
$(P_S > 0$, N^T is some [moving] target net income and $P_{N-NT} < 0)$;

a utilization equation,

$$q = q\left(S, P, \frac{IPOP}{POP}, t\right) \qquad (2$$
$(q_S < 0, q_P < 0, q_t$ unknown$)$

Here IPOP is insured population, and q_p falls in absolute value as IPOP→POP. t is a trend term to allow for shifts in education, income, tastes, etc.

Given utilization rates,

$$Q = q \cdot POP \tag{3}$$

the income equations are:

$$G = P \cdot W \tag{4}$$
$$N = (1 - c)G \tag{5}$$
$$c = c(W, P) \tag{6}$$
$(c_W$ unknown but probably negative, $c_P < 0)$

and the workload equations are:

$$W = Q/MD \tag{7}$$
$$W^d = W(P, N) \tag{8}$$
$$S = S(W, W^d) \tag{9}$$

We assume for Canada as a whole that MD is exogenous, but within any region we get:

$$MD = M(N, S) \tag{10}$$
$(M_N > 0, M_S < 0)$

although MD can also be considered a policy variable. It is clear that linearization of these equations leads to rather complex reduced forms due to the interactive relations in (4) and (5). But these difficulties can be surmounted by linearizing in logs, particularly since multiplicative effects are not implausible in the various behavioral relations specified. Thus, we write:

$$\ln P = p_0 + p_1 \ln (N - N^T) + p_2 \ln S \tag{1'}$$
$$\ln q = q_0 + q_1 \ln S + q_2 \ln P + q_3 \left[1 \frac{IPOP}{POP}\right] \ln P + q_4 \ln t \tag{2'}$$

where q_3 drops out as insurance becomes universal and q_2 measures the residual effect of uninsured services.

$$\ln Q = \ln q + \ln POP \tag{3'}$$
$$\ln G = \ln P + \ln W \tag{4'}$$
$$\ln N = \ln (1 - c) + \ln G \tag{5'}$$
$$\ln (1 - c) = c_0 + c_1 \ln W + c_2 \ln P \tag{6'}$$

[to avoid the problem of relating ln c and ln (1 − c); if c = c(W) then so is (1 − c)];

$$\ln W = \ln Q - \ln MD \tag{7'}$$
$$\ln W^d = w_0 + w_1 \ln P + w_2 \ln N \tag{8'}$$
$$\ln S = \ln W - \ln W^d \tag{9'}$$
(redefining S as W/W^d);

And for regions or provinces,

$$\ln MD = m_0 + m_1 \ln N + m_2 \ln S \tag{10'}$$

We may reduce this model substantially by collapsing identities into behavioral relations, thus (3′) − (7′) yield:

$$\begin{aligned} \ln N &= c_0 + c_1 \ln W + c_2 \ln P + \ln W + \ln P \\ &= c_0 + (1 + c_1) \ln W + (1 + c_2) \ln P \\ &= c_0 + (1 + c_2) \ln P + (1 + c_1) (\ln q + \ln POP - \ln MD) \end{aligned} \tag{11}$$

And combining (7′) – (9′) yields:

$$\ln S = \ln q + \ln POP - \ln MD - w_0 - w_1 \ln P - w_2 \ln N \tag{12}$$

If at this point we regard population and physician stock as given, we find that (1′), (2′), (11) and (12) are four simultaneous equations in the variables P, q, N and S.

In matrix representation these equations become:

$$\begin{bmatrix} 1 & 0 & -p_1 & -p_2 \\ -q_2 - q_3\left[1 - \dfrac{IPOP}{POP}\right] & 1 & 0 & -q_1 \\ -(1 + c_2) & -(1 + c_1) & 1 & 0 \\ w_1 & -1 & w_2 & 1 \end{bmatrix} \begin{bmatrix} \ln P \\ \ln q \\ \ln N \\ \ln S \end{bmatrix} \begin{array}{l} = p_0 - p_1 \ln N^T \\ = q_0 + q_4 \ln t \\ = c_0 + (1 + c_1) \ln(POP/MD) \\ = -w_0 + \ln(POP/MD) \end{array}$$

With this system we can investigate the responses of prices, physician incomes, services per capita, and shortages to changes in physicians' income aspirations, exogenous demand shifts, or physicians per capita. It is interesting to note that in spite of allowing for variations in output per physician or services per capita, in the end neither variable enters independently of the other except for the insurance transition variable IPOP/POP. In evaluating response patterns we must recall that all coefficients in relationships involving logs are in fact elasticities and so will have dimensionality in the neighbourhood of unity for roughly equal proportionate changes.

The details of evaluating the static response pattern of model equations (1′) (2′) (11) and (12) are given in Appendix 2–1. The sign of the determinant of the left-hand-side matrix of system equations is crucial; but it is shown that this is always positive if $|p_1| > |p_2 w_2|$. This relation implies that the direct effect of physician incomes relative to targets on service price levels (p_1) is stronger than the indirect effects of income operating through desired workloads (w_2) and from workloads through shortages (S) to prices (p_2). In other words we assume that for any given level of target incomes, higher actual physician incomes lead to less upward pressure on prices.

This condition signs the left-hand determinant. We now recall that p_2, c_2, and w_1 are positive in the structural equations while p_1, q_1, q_2, q_3, and w_2 are negative, and also note that $-1 < E < 0$ where $E = q_2 + q_3 (1 - \frac{IPOP}{POP})$ because the demand for medical services is price inelastic, and from above $|p_1| > |p_2 w_2|$. Moreover $c_2 \geq c_1$ with equality only if all practice expenses are fixed overhead, since c_1 is the effect of workload on the ratio of net to gross income and unless all expenses are fixed, increased workload raises practice costs. On the other hand c_2 is the effect of price increase, which does not affect expenses, (assuming medical expense items are bought in competitive markets). Also c_1 may be positive or negative, but $(1 + c_1) > 0$ unless medical practice scale diseconomies are so severe that expanding workload causes net income to fall absolutely, not just as a proportion of gross. It follows from these structural bits and pieces that the various elasticities in the model can be expressed as follows. The responding variables are shown as columns, input variables as rows.

	P	q	N	S	Pq
N^T	+	?	+(E)	?	+
q_o	−(p_2)	+	+	+	+
$\frac{POP}{MD}$	−(p_2)	−(E)	+	+	−(p_2)
w_o	−	+	+(p_2)	−	+(p_2)

All entries with E or p_2 included are effects which are ambiguous in general but which take the indicated sign as the bracketed parameter becomes small in absolute value. It is argued that the institutional processes of fee determination in Canada may reduce the sensitivity of overall levels of medical fees to "shortages" ($p_2 \to 0$) and that widespread insurance reduces price elasticity of demand ($E \to 0$).

We may now consider the response of this system to a variety of policy changes, such as increasing the supply of physicians (POP/MD reduced), increasing physician productivity (w_0 increased) or preventative medical techniques which lower "needed" care without requiring physician input (q_0 reduced). We can also consider the impact of extending medical insurance by reducing E. The effects of expanded facilities (F in Figure 2) could be derived as combinations of these effects.

We observe that increasing the number of physicians tends to increase per capita spending. It lowers the average net physician income and alleviates any physician shortage, although the smaller p_2, the less its effect on N. If fee schedules are primarily set to determine physician incomes, not to respond to shortages, then p_1 is near -1 and p_2 is near zero; the impact of more physicians is thus on S, not on N. The relative sizes of p_1 and p_2 also bear on the response of price and volume of medical services to increased physician supply—if p_2 is large and p_1 small then price tends to react negatively and quantity positively to an increase in physicians. However, we have already assumed $(p_1 - p_2w_2) < 0$, so that if p_1 is large and/or p_2 small, increasing the physician stock tends to drive up price while having an indeterminate effect on output of service. This is in accord with intuition as we expect that if prices are set primarily to determine physician net incomes then increasing the number of physicians will drive up prices. The ambiguity in response of quantity to physicians per capita disappears as $E \to 0$, under a regime of full insurance and no price elasticity, q increases unambiguously when MD/POP rises. As a policy, therefore, increasing the physician stock drives up per capita expenditures, reduces the physician shortage *as perceived by physicians*, and reduces physician incomes. It may either raise or lower physician prices, depending on whether prices are more sensitive to physician incomes or perceptions of shortage. If physician prices are lowered, then the absolute supply of medical services will definitely increase, otherwise we cannot be sure. However, as patient response to prices (E) goes to zero as under universal insurance, the increase in q becomes a certainty.

We have already noted that increases in physician productivity may tend to raise *per capita* spending on medical services if p_2 is small. We find, however, that it will have this effect through unambiguous downward pressure on prices and upward pressure on utilization, it is therefore non-inflationary in the true sense, and is effective if one feels that medical services are still in scarce supply. On the other hand it clearly increases costs, and increases in services per capita include both "unmet need" and "overutilization". The perceived shortage (S) is clearly reduced, while physician net income may rise or fall but for small p_2 clearly rises. As for exogenous downward shifts in demand, these lower actual utilization, physician income, and shortages. Their price effects, however, depend again on the strengths of p_1 and p_2. If p_1 is large and p_2 small (as we believe for Canada) then downward demand shifts are *inflationary*, prices rise to maintain physician incomes. Per capita spending, however, should fall.

The introduction or expansion of health insurance coverage tends to reduce E in absolute value, thus tending to change the size of the determinant of the structural equations. As shown in Appendix 2–1, the coefficient of E in this determinant is $-[p_2 + (1 + c_1)(p_1 - p_2w_2)]$ and this coefficient is positive for p_1 large p_2 small. Under these circumstances, a positive adjustment in E (decrease of absolute value of a negative number) will raise the determinant and hence lower in absolute value all elasticities not involving E in the numerator. Others may be indeterminate. From the appendix it can be seen that all price responses are reduced in size, as is the response of q to q_0 and N or S to either w_0 or POP/MD. The response of services per capita to desired workload is doubly reduced, the denominator is increased and the numerator is reduced. Other effects are indeterminate. One small effect, however, is that expanding insurance coverage ensures that rising N^T leads to rising N. It is conceivable, in a world of self-paying patients, that a rise in prices due to increased target incomes could so reduce demand as to lower realized incomes again. (The dynamic feedback into still further price increases would be countered by lowered S—if p_2 were zero this feedback would destroy the model.) As universal insurance drives E toward zero the probability that increased N^T raises N becomes a certainty. Another interesting point is that the reduced response of S to w_0 as E goes toward zero implies that increases in physician productivity have less effect on the perceived "shortage" of care when medical insurance is more widespread.

One can also forecast with this model the effects of changes in the payments mechanism, e.g. the introduction of fixed and binding fee schedules set by governments. This would effectively make $P_1 = P_2 = 0$ and turn p into a policy variable in the other equations. This has the effect of converting equation (1′) above to $\ln P = P_0$, and if we combine this with an assumption that due to universal insurance $E \simeq 0$, the resulting system is:

$$\begin{bmatrix} 1 & 0 & 0 & 0 \\ 0 & 1 & 0 & -q_1 \\ -(1+c_2) & -(1+c_1) & 1 & 0 \\ w_1 & -1 & w_2 & 1 \end{bmatrix} \cdot \begin{bmatrix} \ln p \\ \ln q \\ \ln N \\ \ln S \end{bmatrix} \begin{matrix} = p_0 \\ = q_0 + q_4 t \\ = c_0 + (1+c_1)\ln\dfrac{POP}{MD} \\ = -w_0 + \ln\left(\dfrac{POP}{MD}\right) \end{matrix}$$

The determinant of the left-hand side is $(1 - q_1) + q_1 w_2 (1 + c_1)$ which is positive, although it may be larger or smaller than the full model determinant discussed in the appendixes. In particular it is larger than unity since it equals unity plus positive terms. Derivation of elasticities for this model proceeds exactly as for the more general model in Appendix 2–1, except that the results are much simpler—they can be derived from the Appendix 2–1 equation by setting p_1, p_2, and E equal to zero. They predict that exogenous changes in demand will cause care supplied, physician net incomes, and perceived shortages to rise, with care supplied rising less than proportionally and physician incomes depending on scale economies in practice. Exogenous increases in physician workloads cause an upward shift in care supplied and physician incomes, while perceived "shortages" fall less than proportionately. Increases in physicians per capita cause care supplied to rise and net incomes per physician and perceived shortages to fall. Income per physician may or may not fall in proportion to the increase, depending on the offsetting effects of scale economies of practice and generation of new business; if $|q_1|$ is small and c_1 is large physician net incomes may fall proportionately more than physician density increases. But since p is constant and q is rising, the effect on expenditure per capita from increased physician density is clearly positive. Moreover it can be shown that

$$E_{q'}\frac{POP}{MD} = \frac{q_1\,[1 - w_2\,(1 + c_1)]}{1 - q_1\,[1 - w_2\,(1 + c_1)]} < 0$$

which is the elasticity of services per capita (and with fixed prices, expenditure per capita) with respect to population per physician, is for the signs of cœfficients assumed always less than unity. Under a fixed price regime, expenditure per capita will rise less rapidly than physician density—a non-obvious result.

If the fixed price level P is raised, physician incomes of course rise. Whether they rise more or less than proportionately, however, depends crucially on w_1 and w_2, the price and income influences on physicians' desired workloads. If the positive effect of prices on desired workloads, w_1, is greater than the absolute value of the negative effect of income, w_2, multiplied by $(1 + c_2)$, then increases in the fixed price level will increase services per capita. But if $w_1 < (1 + c_2)|w_2|$, then services supplied will fall, the perceived "shortage" will become more acute, and physicians' incomes will rise less rapidly than the price of their services. Casual impression suggests that for Canadian physicians, the response of desired work load to income is probably stronger than to prices, so *a fortiori* $(1 + c_2)|w_2| > w_1$. Hence a regime of administered prices in this model would predict more acute "shortages" and less care available as physician service price levels are raised, even if the physician density per capita is held constant. This of course is not relevent to past Canadian experience since we have argued that fee schedules have not in the past controlled actual price levels and such schedules were related to physicians' income targets rather than being exogenously determined[15].

The model outlined in this chapter contains no particular "new idea" in the literature of health economics. The basic notions that physicians influence the demand for their own services and set prices in a non-competitive or weakly competitive market in order to achieve income objectives are well-worn in general and institutional discussions of the medical market. All that has been done is to put these bits together into an explicit model whose most important feature is its demotion of the price variable from an equilibrating role. The price of medical services does not adjust to clear the market, since it is not particularly sensitive to "shortages" perceived either by suppliers or by consumers. Market clearing takes place through a complex of informal rationing mechanisms in which the role of the supplier as agent for the consumer is a central feature. The persistence of non-equilibrating prices leads the model to those of its conclusions which are novel—i.e., that expanding the supply of physicians will *drive up* prices as well as costs and that increasing the technical efficiency of physicians may reduce unit prices but will drive up total costs.

It turns out, however, that these conclusions are not particularly radical. Existing models of physician pricing behavior have tended to point in the direction of a disequilibrium, income-oriented role for prices, as efforts to test equilibrium models have broken down against the data. In this section we shall briefly summarize several explicit models of pricing behavior and compare them with the structure laid out above.

---

[15] In this context, a price increase is a relative, not an absolute concept. If P for physicians' services rises in line with price increases in the economy generally, the model would treat the result as zero price increase and any increases in physician income would then be due to rising W, rooted in increased w_0. It is important to note that fixed exogenous prices require more than exogenous, binding fee schedules. It is also necessary that there be no "price creep", redefinition of procedures within fee schedules which raise the actual price received for a particular service.

The discussion is confined to studies in the United States since no formal models of the physician market seem to have been developed for Canada. The purpose of this study is to provide a model of physician behavior in Canada prior to Medicare, however, and for such a purpose U.S. experience may be relevant. If the model is satisfactory for this period, it can be adjusted to a regime of full insurance by modifying parameter values and the price determining equation. But the qualitative results of the model, if valid, should hold for both insured and uninsured markets.

The classic paper by Kessel[16] develops a model of pricing behavior in which physicians act as a cartel to maximize their total income. Price discrimination in this model serves to milk all the consumer surplus out of the demand curve, rather than to subsidize the poor. Kessel then provides a great deal of interesting institutional detail on the way in which medical associations have been able to select and to discipline their members so as to maintain this complex cartel structure. Kessel's paper is useful apart from this material in that it relates the determination of physicians' fees directly to income objectives. It is, however, rooted in the notion of income *maximization* by physicians as a group, and assumes implicitly that pricing decisions are constrained by an exogenous demand curve.

An early paper by Rimlinger and Steele[17] focusses on the distribution of physicians across states. Implicit in their model, however, is an assumption that prices are set so as to maximize physician incomes. The assumption of maximization identifies this model as one of equilibrium but the role of incomes is central.

Briefly, physicians in each state are assumed not to compete but to combine in charging "all that the traffic will bear". Visits per consumer are assumed to be constant across states and not to vary with income, but price per unit of service is assumed to be a constant proportion of patient income in each state. Thus total physician income in each state depends on income and population, and physicians are assumed to distribute themselves so that physician incomes are equal across states. Physicians in low income states provide more services at lower prices, and physician: population ratios are lower.[18]

To see why this is "really" an income-pricing model, consider the assumption that q, services per consumer, is constant over all states. If q were really constant, "charging what the traffic will bear" yields no determinate price. Hence it must be assumed that q is a negative function of P, and that P is set to maximize total revenue Pq (disregarding production costs). This is quite in the spirit of the above extended model, except that direct physician influence on demand is suppressed. One can derive the R/S model from the above model by setting certain parameters equal to zero.

---

[16] R. Kessel, "Price Discrimination in Medicine," *Journal of Law and Economics*, I, (1) October, 1958.

[17] G. V. Rimlinger, and H. B. Steele, "An Economic Interpretation of the Spatial Distribution of Physicians in the U.S.," *Southern Economic Journal*, 30, (1) July, 1963.

[18] A minor sophistication allows physicians to have bi-variate utility functions, with income and workload as positive and negative arguments. Physicians then distribute themselves so that workloads *and incomes* are lower in high income states and the inequality of physician: population ratios is increased.

Unfortunately the particular relationships assumed in the R/S model appear to be theoretically inconsistent. Letting q be volume of services per consumer and p be price, a policy of revenue maximization implies setting p such that,

$$q = -p \frac{dq}{dp}$$

but from the Slutsky equation,

$$\frac{dq}{dp} = \lambda \frac{H^{1,1}}{H} + \frac{(-1)^n H^{n+1,1}}{H} \cdot q$$

where λ is the marginal utility of income and the H are the usual determinants. Combining these, solving for q, and adding the assumption that p is a constant function of income $p = \alpha Y$ (avoiding a host of aggregation problems), we find:

$$q = \frac{-\alpha Y \lambda \frac{H^{1,1}}{H}}{1 + \alpha Y (-1)^n \frac{H^{n+1,1}}{H}}$$

The q determined by this process is required to be income-invariant, so that $dq/dY = 0$ for small changes in Y such that λ and the elements of H are constant. But in fact the numerator of dq/dY is

$$-\alpha \lambda \frac{H^{1,1}}{H}$$

which is not in general zero unless the (compensated) substitution effect is zero, medical care indifference curves are vertical, and no profit-maximizing price is possible. Of course for large variations in Y, no conclusion is possible.

A more recent study of physician pricing behavior by Feldstein [19] attempts to specify demand and supply equations for physicians services and to fit them to annual data under assumptions of annual equilibrium and several forms of dynamic adjustment over time. Consumer demand for medical services is assumed to depend on price paid per service net of insurance coverage, level of insurance coverage, general price levels, government supplied medical care, and a time trend; while supply depends on physician stock, average price received per physician, volume of other medical inputs used, the general price level, physician reference incomes; government supply and a time trend. (The step from reference incomes to target incomes is a short one, although Feldstein's particular measure of reference income is unsatisfactory). In none of his estimated demand equations does the net price to consumers variable have the "correct" *a priori* negative sign, while his estimated supply equations are as noted above backward-bending. He interprets these results to indicate a permanent state of excess demand in this market due to the fact that physicians have *restrained* prices below the levels which would clear the market. Physicians' prices and incomes are lower than they would be if an income maximizing policy were actually followed.[20] Feldstein suggests physicians may prefer a state of excess demand since it enables them to ration their services, devoting more time to "interesting cases" and less to "crocks". Additionally, the impact of rationing by price alone on the health of lower income groups and the finances of middle income groups may lead physicians to avoid such a strategy in the interest of their patients. Thus he concludes that (in terms of our model) the exogenously determined level of desired utilization of medical services *per capita* has been such that workload for all physicians would have been above desired levels at actual prices charged if demand rationing measures had not been applied. Whether downward pressure on q by physicians was great enough to equate W^d and W is not considered.

---

[19] Feldstein, *op. cit.*, as well as D. M. Brown and H. E. Lapan, "The Rising Price of Physicians' Services: A Comment" and M. Feldstein, "The Rising Price of Physicians' Services: A Reply," in *Review of Economics and Statistics*, LIV, (1) February, 1972.

The interesting thing about this line of argument is that it cannot really be distinguished from the argument that physicians create their own demand. If physicians can influence both price and quantity, how can we tell that the actual q observed is always *below* what it would have been if physicians had not influenced demand? How can physicians *not* influence demand? The hypothetical "exogenous q" is not observable, unless the physician: population ratio is so low that physicians are fully engaged in providing patient-initiated services.[21] The Feldstein findings are thus quite consistent with the model presented above, although Feldstein's speculations about ethical and professional influences on pricing policy are more general than our focus on target incomes. Feldstein also derives a rather peculiar result, that the impact of increased imputs of paramedical personnel and other non-physician factors of production tends to increase *prices* as well as medical service costs, implying that inputs raise costs faster than output. Such a result was excluded *a priori* from our model, on the assumption that under such circumstances paramedical inputs would not be used. Moreover, findings by Reinhardt[22] suggest that while absolute fee levels and use of paramedical aides are positively correlated across practices, nevertheless the average U.S. physician could substantially increase his excess of billings over costs (at constant prices) by hiring more aides.

---

[20] Such a finding would go far to explain the misunderstanding between physicians and some students of the medical care market. Observers of the very high incomes of physicians, and the rapid escalation of both prices and incomes, have concluded that physicians *must* be charging all that the traffic will bear. The physicians' reply, in effect, is that they are practicing restraint, that the traffic will bear much more! They may be right.

[21] The problem of distinguishing between a state of generalized shortage with rationing and of physician-generated demand is raised in Evans *et al.*, "Medical Productivity . . . ," *op. cit.* The finding that services per capita respond to physicians *per capita* with an elasticity of $0.85-0.9$ in B.C. is consistent with either situation, but it must be noted that in 1969 B.C. had 117 fee practice physicians per 100,000 population or 28 per cent above the national average of 91.4. If the B.C. market is still in a state of excess (exogenous) demand, then for Canada as a whole the "physician shortage" was about 5,400 fee practice physicians in 1969! The cost implications of trying to make up such a "shortage" are rather disturbing.

It may of course be possible to distinguish between "shortage" and "demand generation" by analysis of detailed data on physician billings. There may be systematic shifts in the ratio of patient-initiated services to total services as the density rises; some students of the problem suggest that the ratio of consultations goes up sharply when a surplus of physicians leads to demand generation and that certain specialists find themselves underworked and broaden their practices. Physician profile data is now being collected in several Canadian provinces and could cast much light on these issues if properly analyzed. Aggregate data on total incomes and billings, however, cannot distingush between shortage and generation.

Shortly after Feldstein's study, J. Newhouse examined physician pricing behavior for consistency with either competitive or monopolistic models of industry organization.[23] Newhouse postulates a standard consumer demand function, per capita service demand is a function of service price and income, then confronts this with two models of physician behavior. Model I assumes that physicians act as a perfect cartel, setting marginal cost equal to marginal revenue for the group as a whole but practicing no price discrimination. (Alternatively each physician is regarded as a simple monopolist in a world of "representative" physicians and patients). Model II defines a supply curve in which total service output is a function of service price and physician stock and rises with price. In both models, price is the only nexus between supply side and demand side.

Newhouse originally argued that his finding of a positive correlation between price and physicians per capita across metropolitan regions rejected the competitive model and sustained the monopolistic. Frech and Ginsburg have shown, however, that this result turns on his having assumed a constant marginal cost in the monopolistic case ("for convenience") and a rising marginal cost (embodied in the rising supply curve) for the competitive case. When both models have rising marginal costs, both predict a negative relation between price and physician density and both are rejected. They suggest that this may be due either to physician migrational patterns which are so rapid as to hold down price differentials, or alternatively, that physicians' pricing reactions to disequilibrium are very slow. Yet Feldstein's results suggest that a dynamic adjustment model is not adequate to explain the "perverse" price effect. In accepting this finding, Newhouse and Sloan build on an idea, expressed in a footnote by Newhouse, that perhaps physicians are not income maximizers after all but rather set fees to achieve a target income, precisely the driving mechanism of the model above. They adduce several sorts of evidence, on price dispersion within markets, low price elasticities for both individual physicians and physicians as a group, arguments by medical spokesmen to support the proposition that physicians are not profit maximizers. None of their evidence is conclusive, but it creates a plausible structure. At the same time, of course, it undercuts the equilibrating role of price which was central to the original Newhouse study and argues for a more complex nexus between consumer and supplier. In calling for a richer model of physician decision-making they appear to be on the right track.

---

[22] U. Reinhardt, "A Product Function for Physician Services," *Review of Economics and Statistics*, LIV, (1) February, 1972.

[23] Newhouse, *op. cit.*, as well as H. E. Frech and P. B. Ginsburg, "Physician Pricing: Monopolistic or Competitive." (December, 1970), and J. P. Newhouse and F. A. Sloan, "Physician Pricing: Monopolistic or Competitive: Reply," (February, 1971), all reproduced by the Rand Corporation, No. P. 4011.2, Santa Monica, California (February, 1971).

The paper by Reinhardt referred to above focusses on the production function for physicians' services rather than pricing policy *per se*. Together with the larger study from which it is drawn, however, it embodies assumptions about the structure of physician prices consistent with the model of this chapter.[24]

Reinhardt's production function analysis indicates a large discrepancy between the shadow price of physician time implicit in choices of aide inputs relative to own time, and the price implicit in existing fee levels. This discrepancy can be rationalized either by the conclusion that physicians do not know how to organize their practices for maximum output, or that they have a strong psychic preference for small work forces. In either case they are not acting as income maximizers. Following Feldstein, he identifies a state of general excess demand in this market as providing a price "umbrella" enabling physicians to engage in non-price discretionary behavior; but this argument is as noted subject to the qualification that one cannot distinguish excess demand from discretionary power over quantity.

In his longer study, Reinhardt suggest a tentative model of physician behavior in which physicians attempt to set relative prices of procedures with a fee schedule according to their relative resource cost and then set the absolute level of fees according to patient ability to pay. Ability to pay is expressed by "customary" levels of payment for physician time and mark-ups for other medical inputs supplied by the physician which reflect the average income level of the community and are accepted as more or less exogenous by each physician. Reinhardt emphasizes the very tentative nature of this model, although it has a degree of plausibility and consistency with what physicians claim to do in setting prices. For our purposes, however, the interesting features are that physicians *accept* local custom in valuing their own time, they are not forced to do so by competitive pressure, and that no mechanism controls movements over time in customary levels. (Such movements may be triggered by major and visible shifts in insurance coverage, such as a large union contract or a government plan, which significantly increase the ability to pay of individuals). Thus the model implies the unexercised discretionary power of physicians as individuals or as a group, and appears consistent with the overall argument of this chapter.

The discussion in this chapter has followed the prejudices of the author in focussing on models of pricing behavior leading to results consistent with the central theme. Other models, of course, continue to be developed which restrict the interaction between demand and supply to price and insurance variables alone and which exclude unexploited discretionary power of suppliers by assuming optimization. Some go further and include an explicit or implicit assumption of perfect competition.

Thus the models of Pauly[25] which focus on demand alone include assumptions that medical care is priced at its marginal cost, at least in the long run, regardless of scale of operations and elasticity of demand. This is equivalent to assuming a perfectly competitive supply side to the health market, and his conclusions depend significantly on that implicit assumption. Yett *et al*[26] in developing a multi-equation model of the whole health industry, develop demand and supply relations for sectors of the industry and treat medical and surgical specialists as two such sectors. Their demand equations depend only on demographic and financial (price, income, insurance) type variables, thus all direct influences by suppliers are excluded. Ruffin and Leigh[27] *explicitly* adopt a perfectly competitive model of medical service supply to demonstrate that price discrimination can emerge from such a model if physicians have preferences for treating patients which are inversely related to patients' incomes. It would appear that their model also requires that potential entrants to this market have similar preferences, and that physicians all agree on classification of patients by income (rightly or wrongly); otherwise equilibrium will not be reached.

---

[24] Reinhardt, *op. cit.*, and also *An Economic Analysis of Physicians' Practices*, unpublished doctoral dissertation, Yale University, 1970.

[25] M. V. Pauly, *Medical Care at Public Expense* New York: Praeger, 1972, p. 22, and "A Measure of the Welfare Cost of Health Insurance," *Health Services Research*, 4, (4) Winter, 1969.

The Ruffin and Leigh paper has the virtue of posing the case for a perfectly competitive model explicitly. They note that a refutable model is better than an irrefutable one, even if it is incorrect, since we can progress in refuting it. The trouble is that once one introduces such unmeasurables as changing consumer tastes (cross-sectionally and over time), implicit prices, and optimization by suppliers of objective functions which include unmeasurable preferences for different types of activity, then the perfectly competitive model is itself irrefutable and the derivation of particular behaviors from such a model by imposing appropriate side conditions is merely a technical exercise.

We must then fall back on the study of particular institutional features of the health care market, and if one is willing to accept this market as conforming "closely enough" to the assumptions of perfect competition—no price collusion, free entry and exit, homogenous products, unlimited recontracting, perfect (or at least freely available) information on prices and product characteristics—then of course one may use such models. One cannot argue over a statement of faith but one can note that nothing else seems to support the competitive market hypothesis.

A full survey of the literature related to physicians' pricing decisions would take us into studies of determinants of demand, of the technology of medical practices, the supply and migration patterns of physicians, the availability of non-priced factors of production, services competitive to physicians, and so on out over the whole health care field. One must, however, stop somewhere; and the discussion above has served to put the model of this chapter in perspective in terms of some of the recent contributions to the analysis of physician pricing behavior.

---

[26] D. E. Yett, L. Drabek, M. D. Intriligator and L. J. Kimball, "A Macroeconometric Model for Regional Health Planning," (mimeo), Human Resources Research Centre, U.C.L.A. (August, 1971).

[27] R. J. Ruffin and D. E. Leigh, "Charity, Competition, and the Pricing of Doctors' Services," (mimeo), Washington State University, 1969.

APPENDIX 2–1

EQUILIBRIUM RESPONSES OF THE PHYSICIAN MODEL

The first problem is to evaluate the determinant of the matrix of coefficients which we shall designate D. Written in extended form, this becomes:

$$
\begin{aligned}
D = {} & [1 + q_1 w_2 (1 + c_1) - q_1] \\
& -p_1 \left[(1 + c_1)\left(q_2 + q_3\left[1 - \frac{IPOP}{POP}\right]\right) - q_1 (1 + c_2)\right] \\
& +p_1 [q_1 w_1 (1 + c_1) - (1 + c_2)] \\
& +p_2 \left[w_2 (1 + c_1) (q_2 + q_3 \left[1 - \frac{IPOP}{POP}\right] + w_1\right] \\
& +p_2 \left[w_2 (1 + c_2) - \left(q_2 + q_3\left[1 - \frac{IPOP}{POP}\right]\right)\right]
\end{aligned}
$$

which looks rather intractable at first sight. Going back to the structural equations, however, we note that $p_1 < 0$, $p_2 > 0$, $q_i < 0$ $(i = 1 \text{ to } 3)$, $c_2 > 0$ (because as P goes up, net rises faster than gross, and $(1 - c)$ rises, but c_1 is indeterminate *a priori*). The Canadian data suggest that N/G rises with income within provinces (i.e , for P constant) so that $c_1 > 0$ is a reasonable assumption. In any case $(1 + c_1) > 0$ is even safer since the alternative would imply that (for P constant) marginal increases in W increase costs so fast that N *falls*. Finally $w_1 > 0$, $w_2 < 0$.

These conditions are insufficient to sign D. But if we add one assumption, that $|p_1| > |p_2 w_2|$, then $D > 0$ is determined. The meaning of this assumption is that the direct (negative) effect of income on prices (p_1) is stronger than its indirect effects operating through a negative effect of income on desired workload (w_2) which affects the shortage (S) positively, and may tend to drive up $P(p_2)$. But the latter influence is particularly likely to be weak in the Canadian context.

To sign the determinant, we shall group its terms and define $E = q_2 + q_3 \left(1 - \frac{IPOP}{POP}\right)$. We know $E < 0$, but we shall also assume $E > -1$ which implies that the demand for medical services is relatively price inelastic. This is obvious when $E = q_2$ (population all insured) and is empirically supported when $E = q_2 + q_3$ (no medical insurance). Now we group terms according to whether or not they are multiplied by a term in c. The first set of terms is:

$$\{1 - q_1 + p_2 w_1 - p_2 E\}$$

which has no c multiplicand and is unambiguously positive. Then we examine

$$(1 + c_2)\{p_1 q_1 - p_1 + p_2 w_2\}$$

and since we have assumed $|p_1| > |p_2 w_2|$ these terms are also positive. Unfortunately $(1 + c_1)\{q_1 w_2 + p_1 q_1 w_1 - p_1 E + p_2 w_2 E\}$ is not so tractable. The terms excluding E are positive, but $-p_1E$ is negative and by our assumption above so is $-p_1E + p_2w_2E$. Thus the $(1 + c_1)$ terms taken above are not unambiguously signed. However if we break off the last two $(1 + c_2)$ terms and combine them with the terms in E (leaving the positive p_1q_1) we get $(1 + c_2)(-p_1 + p_2w_2) + (1 + c_1)E(-p_1 + p_2w_2)$ and the issue turns on whether $(1 + c_2) + (1 + c_1)E$ is positive. Since $0 > E > -1$, it is sufficient if $(1 + c_2) > (1 + c_1)$. But c_2 is the percentage increase in net income relative to gross if prices alone change, i.e., no change in workload or absolute expenses of practice. If prices are held constant and workload changes, net income relative to gross changes by c_1. If all expenses of practice are fixed (all overhead costs) $c_2 = c_1$, otherwise $c_2 > c_1$ if expenses rise. $c_1 > c_2$ is possible only if increasing workload decreases practice costs *in absolute terms.* This is hard to imagine. Thus we assert $c_2 \geq c_1$, and so $(1 + c_2) + (1 + c_1)E > 0$. It follows that $D > 0$.

We can now apply Cramer's rule to derive static responses, focussing on one output variable at a time to simplify the process of calculating determinants. We examine the response of the price level to shifts in physicians' target incomes (N^T), in exogenous "tastes" for physician services (q_0), to the population: physician ratio $(\frac{POP}{MD})$, and to physicians' desired workload (w_0). The relationships are:

$$E_{p,N^T} = \frac{-p_1\{1 + w_2q_1(1 + c_1) - q_1\}}{|D|} \tag{A1}$$

$$E_{p,q_o} = \frac{p_2 + (1 + c_1)(p_1 - p_2w_2)}{|D|} \tag{A2}$$

$$E_{p,\frac{POP}{MD}} = \frac{p_2 + (1 + c_1)\{p_1 - p_2w_2\}}{|D|} \tag{A3}$$

$$E_{p,w_0} = \frac{-p_2 - p_1q_1(1 + c_1)}{|D|} \tag{A4}$$

Similarly, we can calculate

$$E_{q,N^T} = \frac{p_1\{-E + w_2q_1(1 + c_1) + q_1w_1\}}{|D|} \tag{A5}$$

$$E_{q,qo} = \frac{1 - (p_1 - p_2w_2)(1 + c_1) + p_2w_2}{|D|} \tag{A6}$$

$$E_{q,\frac{POP}{MD}} = \frac{q_1\{1 - (1 + c_1)(p_1w_1 + w_2) - (1 + c_2)p_1\}}{|D|} + \frac{\{p_2 + (p_1 - p_2w_2)(1 + c_1)\}E}{|D|} \tag{A7}$$

$$E_{q,w0} = \frac{p_1q_1(1 + c_2) - p_2E - q_1}{|D|} \tag{A8}$$

and

$$E_{N,N^T} = \frac{-p_1\{(1-q_1)(1+c_2)+(E-q_1w_1)(1+c_1)\}}{|D|} \tag{A9}$$

$$E_{N,q_0} = \frac{\{(1+p_2w_1)(1+c_1)+p_2(1+c_2)\}}{|D|} \tag{A10}$$

$$E_{N,\frac{POP}{MD}} = \frac{(1+c_1)(1+p_2w_1)+p_2(1+c_2)}{|D|} \tag{A11}$$

$$E_{N,w_0} = \frac{-p_2(1+c_2)-(p_2E+q_1)(1+c_1)}{|D|} \tag{A12}$$

And

$$E_{S,N^T} = \frac{p_1\{w_2(1+c_1)E-E+w_1+w_2(1+c_2)\}}{|D|} \tag{A13}$$

$$E_{S,q_0} = \frac{\{1-(p_1w_1+w_2)(1+c_1)-p_1(1+c_2)\}}{|D|} \tag{A14}$$

$$E_{S,\frac{POP}{MD}} = \frac{\{1-(1+c_1)(w_2+p_1w_1)-p_1(1+c_2)\}}{|D|} \tag{A15}$$

$$E_{S,w_0} = \frac{p_1(1+c_2)+p_1E(1+c_1)-1}{|D|} \tag{A16}$$

Finally we note that $E_{Pq,x} = E_{P,x} + E_{q,x}$ or the elasticity (at a point) of the product of two variables with respect to a third is equal to their separate elasticities. In particular the elasticity of Pq, dollars per capita spent on medical services, with respect to any of N^T, q_0, $\frac{POP}{MD}$, or w_0, is equal to the sum of the elasticities of P and q. For small changes, therefore, we can find the percentage change in medical service cost per capita in response to any of the exogenous variables by summing the expressions above. Thus we find

$$E_{Pq,N^T} = \frac{p_1[q_1(w_1+1)-(1+E)]}{|D|} \tag{A17}$$

$$E_{Pq,q_0} = \frac{1+p_2(w_1+1)}{|D|} \tag{A18}$$

$$E_{Pq,\frac{POP}{MD}} = \frac{p_2(1+E)+q_1-(1+c_2)p_1q_1}{|D|} + \frac{(1+c_1)[(p_1-p_2w_2)(1+E)-q_1(p_1w_1+w_2)]}{|D|} \tag{A19}$$

$$E_{Pq,w_0} = \frac{p_1q_1(c_2-c_1)-p_2(1+E)-q_1}{|D|} \tag{A20}$$

Now we recall the *a priori* assignment of parameter signs derived from our model:

Positive	Negative
p_2, c_2, w_1	p_1, q_1, q_2, q_3 w_2

Furthermore, $-1 < E < 0$ where $E = q_2 + q_3 (1 - \frac{IPOP}{POP})$ and $|p_1| > |p_2 w_2|$, both by assumption; and $c_2 \geq c_1$ with equality holding only if all practice expenses are fixed overhead. The sign of c_1 is ambiguous, but $(1 + c_1) > 0$ in general unless diseconomies of scale in medical practice are so pronounced that an increase in workload causes a fall in net income *in absolute terms.*

From these we observe that two of the four elasticities of per capita expenditure are unambiguously signed, and one of them "almost" signed. Per capita spending reacts positively to N^T and q_0, while all but one term in the numerator of (A19) is negative. That one term is $p_2(1 + E)$, for which E has an upper limit of zero and p_2 represents the upward pressure of "shortages" of physician services on price—which we have argued is small in the Canadian context. It is not very surprising that per capita spending on medical care should rise with physician target incomes, exogenous demand factors or the ratio of physicians to population. It is more important to observe what factors will influence the relative split in spending as between more care and higher prices.

More interesting is the ambiguous sign in equation (A20) on E_{Pq}, w_0. $p_1 q_1 (c_2 - c_1) - q_1$ is positive, while $- p_2(1 + E)$ is negative. We thus find that the size of p_2 and E are crucial. If p_2 is "small" and/or E is "large" in absolute terms then the response of per capita medical spending to exogenous shifts in desired physician workload is positive. (Interestingly enough, universal health insurance brings $(1 + E)$ close to 1 and thus reduces the absolute value of the response of per capita spending to both physicians per capita and physicians' desired workload—a non-intuitive result.) For p_2 small, quite likely in the Canadian context of fee setting at the provincial level, the result of a technical change in medical practice which raises physicians' desired workloads will thus be an increase in medical expenditure per capita. In particular the practitioner associate or physician's assistant recommended by many (including the Canadian Task Forces on Health Costs[1]) as a remedy for rising health service costs will, if placed under the direction of the physician in private practice tend to *raise* the rate of increase of medical costs! This of course assumes that the stock of physicians is held exogenous—a reduction in the number of physicians combined with an increase in workload per physician through the use of assistants would lead to upward pressure through w_0 cancelled by downward pressure through the rise in POP/MD, examination of equations (A19) and (A20) shows that terms would cancel to leave an unambiguous net negative effect as desired. We would also need to know the impact on physician net income of such a plan, which would depend on the rate of payment of assistants. So long as the assistant had a positive impact on net income for those physicians who remained in practice, however, the cost reducing impact of the plan would be reinforced (Equation 29). Thus if medical costs increases are to be abated by the introduction of physician assistants, either the supply of physicians must be reduced at the same time or else the physician's power over his own workload must be removed. Observe that if $q_1 \rightarrow 0$, so that medical services per capita no longer respond to the relative "shortage" of physicians, the response of costs to desired workload becomes zero or negative.

---

[1] *Task Force Reports on the Costs of Health Services in Canada*, Canada, Department of National Health and Welfare, Ottawa, Queen's Printer, 1969. Vol. III pp. 55-63.

As for equations (A1) – (A16), we note that as argued above, $(1 + c_2) > (1 + c_1)$ and $-1 < E < 0$. Thus $(1 + c_2) + (1 + c_1) E > 0$. Given this, we may unambiguously sign (A1) (A6) (A8) (A9) (A10) (A11) (A14) and (A15) as positive, (A4) and (A16) as negative, and the remaining six as ambiguous. Three of the six turn on the sign of $p_2 + (1 + c_1) (p_1 - p_2 w_2)$; if this is positive then so are (A2) and (A3), and (A7) is negative. However if p_2 is "small" as argued above then (A2) and (A3) become negative and (A7) is still ambiguous. "Small" E, or little price elasticity of demand, makes (A7) clearly negative. The sign of (A5) turns on the relative strengths of income and substitution effects in physicians' demands for leisure. Higher target incomes lead to upward pressure on prices, leading to both higher incomes and prices. If the income effect dominates, desired workload falls and so per capita medical services fall (through rising S). In addition higher prices may lower demand. But if substitution effects are strong, high prices may lead to more desired workload and greater service per capita in spite of raised income. In (A12), desired workload rising leads to higher physician income unless p_2 is large—if so the resulting reduction in "shortage" may drop prices to the point where income falls. But for "small" p_2 the impact is clearly positive. Equation (A13) again depends on income and substitution effects, as well as the pattern of scale economies in practice. Strong preferences for leisure as income rises (large absolute w_2) tend to exacerbate "shortages" as N^T rises, but strong substitution effects (more work by physicians when fees rise) and possibly influences on demand as well tend to reduce S when target incomes rise. The conclusion is that we cannot tell.

APPENDIX 2–2

LIMITATIONS OF THE PHYSICIAN-PRICING MODEL

The model presented in this section is an extension and generalization of aspects of the existing literature on physician price determination. It allows for a wider range of variables and interactions than conventional supply/demand formulations, and appears to be a more realistic representation of what we know about this market. All the models discussed in this chapter, however, share certain shortcomings, that they do not deal adequately with problems of aggregation, with dynamic rather then static behavior, and with the endogenous reactions of reimbursement agencies. These problems are of course common to a great many models in the traditional corpus of economic theory, and their treatment requires a more extended and sophisticated theory than has currently been worked out in the health care field. Adequate treatment of these issues would require considerable future research.

The aggregation problem arises wherever fee schedules are in effect covering all or much of a physician's work. Under such schedules each procedure is itemized and assigned a price which is accepted by each physician performing that procedure.[1] The setting of this fee schedule then becomes an important component of the overall adjustment process. It is clear that the income aspirations of individual physicians are inputs to this procedure, together with judgments about the market and/or the political environment by the fee-setting body. But the fee-setting agency which represents physicians is not the servant of a monolithic group of individuals identical in tastes, preferences, and style of practice. Actual incomes, as well perhaps as income aspirations, differ greatly across specialties and across individuals within specialty. A given average percentage increase in the overall fee schedule may have very different effects on individuals' incomes depending on whether it represents larger increases in office call fees and smaller or no increases in laboratory charges, or vice versa. Does the degree of inequality of incomes across or within specialties affect the rate of adjustment of the overall price level? Are some individuals' aspirations more influential than others? Is there "horsetrading" among specialties in determining who will get what increases subject to some general feeling of overall constraints on the average price increase for reasons of political acceptability? We really know very little about the internal process of relative fee determination, except that some effort is made to adjust fees to the level of time, effort, and cost involved in performing a procedure, and that such adjustments are quite incomplete.[2] The model presented in this chapter does not bear on these issues, as it treats physicians as homogenous, focusses on the average price of all physicians' services, and suppresses the institutional intermediation between market or target income forces and changes in list prices.

---

[1] Of course there are a wide variety of institutional variants which define the physician's rights to bill above or below this schedule, and to bill the patient or the insuring agency.

[2] See U. Reinhardt, *An Economic Analysis of Physician's Practices*. Unpublished Ph.d. dissertation, Yale University, 1970, and *Task Force Reports on the Costs of Health Services in Canada*, Canada, Department of National Health and Welfare, Ottawa, Queen's Printer, 1969, Vol. III pp. 239-247.

Secondly, this model is static rather than dynamic. All equations are formulated in level terms, and their simultaneous solution yields a static price level unless trends are fed in from outside through other variables. Such exogenous trends are quite plausible for such variables as population, the physician stock, and technical progress; but it is unfortunate that one of the key "inflationary" variables in this model is N^T, the target income level of physicians. The model itself does not generate price changes over time; it merely transmits the dynamic behavior of other variables into shifts in price through a series of static equalities. No allowance is made for lags or inter-temporal adjustment patterns.

This lack is unfortunate, but inevitable at this stage. We do not yet have nearly enough knowledge to specify a set of differential equations representing physician price behavior, to say nothing of data reliable enough to test such a model. Specifying an adequate static model of this market is an ambitious enough exercise at this point; we have barely broken away from mechanical supply/demand. And the key role of income aspirations as an exogenous variable, though highly unsatisfying intellectually, may simply reflect the real state of the world.

Finally the models presented herein disregard entirely the political environment in which pricing decisions are made. To the extent that fee schedules are set with one eye on the response of a government insurance agency, the price equation of the model should be modified. In defense, however, one can argue that this sort of political influence is impossible to capture in a systematic equation format. Thus we regard the effect of alternative government policies as ways of substituting specific rules for the existing price-determining equation. This is not sufficient, because it disregards the influence of medical associations' forecasts of public response which if correctly forecast may be averted, and because governmental influence is exerted primarily over list prices rather than over actual prices per service unit. Control of lists may increase "price creep" or "wage drift", or whatever label one gives to the breakdown of direct controls.

Nevertheless the interaction between fee-setting body and reimbursing agency is a very fuzzy area which has been and will continue to be in a state of flux. No single generalization would hold over time or across provinces. Like the aggregation problem and the dynamic features of the model, the bargaining process between supplier and reimbursor would repay considerable further study.

chapter three

MARKET BEHAVIOR OF PHYSICIANS BY PROVINCE

Ideally, the next step beyond the development of a model such as that in chapter two would be the confrontation of that model with the existing data on prices, quantities, and physician income and stocks in order to fit its simultaneous relationships and measure the parameters involved. One could employ various proxies for the concept of a shortage; the frequency of certain types of elective procedure might be a partial indicator of pressure on the physician.[1] Unfortunately, all such efforts are bound to come to grief on the problem that we have only current value series (price times quantity) on the quantity of medical services supplied and that our price data are not nearly reliable enough to derive quantity series from these. We may be able, as in chapter one, to make plus or minus 10 per cent estimates of price change over the whole period, but estimates of the change in average price levels in any one year would be much more tentative. Any error in price measurement within a time period will automatically create an equal and opposite error in the estimated volume of services provided, as well as a possible offsetting error in price and quantity measures for other time periods. The estimation of a large number of parameters in a simultaneous model framework is likely to be highly sensitive to this sort of systematic error in data input, particularly when we are trying to study the two-way interdependence of price and quantity. One could, of course, press on and damn the data; but the results, if any, from the estimation of such a simultaneous model would be impossible to interpret.

---

[1] As noted in chapter two, detailed physician billing profiles could yield very good regional "shortage" proxies; but this data is not made available for research.

As an alternative, we have chosen to approach the existing data on the medical services market from a less formal point of view. Keeping in mind the detailed model presented in chapter two, we can observe what sorts of empirical information are available, ask what sorts of behavior might be predicted by the model, and observe whether we can detect this sort of behavior in the recorded series. This approach is admittedly less precise than one of explicitly estimating the detailed model parameters, and is certainly less intellectually satisfying. On the other hand, it has the virtue of starting from the data which we actually have rather than that which we require theoretically. One might bridge the gap between the two by a structure of heroic assumption; but we find ourselves afflicted with pusillanimous realism. One of the pay-offs from universal medical insurance will be that over the next decade price and quantity data will become available in such detail that the model above will be estimable; for the moment we must make do with what we have.

It is clear that analysis of data at the national level of aggregation is of little profit in determining how the medical market works. The overall levels of spending, prices, volume, and incomes are of course crucial for public policy, but the actual decision-making processes which lead to price-formation take place at a provincial level. In some provinces this level may be too highly aggregated as several distinct regional markets may exist. This has become less relevant with respect to prices as insurance plans equalize payments within provinces, but remains important with respect to differences in workload, facilities, costs of practice, and other factors. Almost all published data are available at the provincial level, however, and the difficulties of going below this level are extreme since there is no recognized uniform classification of sub-provincial regions on which all data are collected. Attempts to establish consistent intra-provincial regional bases for economic, demographic and health data would represent major research projects in themselves for each province. For this reason the medical service market is analyzed by province in this chapter. In the next, it is roughly subdivided by medical specialty to try to capture differences in the behavior of "demand", supply, and price across different classes of care.

THE STOCK OF PHYSICIANS

As soon as we move to examining the market for physicians' services at a provincial level, it becomes necessary to drop the assumption that the number of physicians is an exogenous variable. It is not, of course, strictly true that the national physician stock is exogenous—the rate of new entrants and retirements depends on relative costs of training and returns to practice compared with other occupations or retirement, and the flow of in-migrant physicians depends on national immigration policy, licencing procedures of professional associations, and the relative incomes of Canadian and foreign physicians. Nevertheless, over the period under review entry has been effectively constrained by the availability of training facilities and Canadian physician incomes seem to be high enough relative to foreign that marginal adjustments will not affect the flow. Unless we specify "reaction functions" making endogenous the policy moves of the Canadian government, it is safe to treat national MD stock as "approximately" exogenous, bearing in mind that licencing procedures and retirement rates may qualify this assumption.

At the provincial level the MD stock is clearly endogenous, both because physicians can migrate and because the locational choices of new physicians may be sensitive to income, price, and workload variables. Given the rapid influx of new physicians over the period, adjustments to relative physician stocks across provinces are quite swift and cheap since little actual migration need be induced. Nevertheless, this relation is more appropriately studied independently of the determination of physician income, etc., because the effect is almost certainly a lagged one. The flow of physicians to an area depends on past values of the other variables in the model (presumably extrapolated) and thus we can treat the physician stock as an endogenous pre-determined variable in analyzing the behavior of the rest of the market.

The stock of physicians is easy to measure—so easy that there are a large number of such measurements available, all different. A detailed discussion of the differing estimates of physician stock drawn from the literature on this subject is given in Appendix 3-3, relating their differences to differences in conceptual background or timing, while Tables II, IIA, III and IIIA present comparative data by province. Tables II and III present data for those civilian physicians drawing income "mainly" from fee-for-service practice; these are the physicians for whom average incomes are computed and reported by the Department of National Health and Welfare on the basis of taxation statistics. The number of such physicians per 100,000 population in each province from 1957 to 1969 is reported in Table II, and this value is related to the national average for each year in Table III to give an idea of the relative availability of physicians in each province. The absolute level of physicians per 100,000 population on this measure underestimates medical service supply, as it excludes physicians giving medical care under other conditions of payment, or about 25 per cent of the total. Tables IIA and IIIA attempt to adjust for this; in the first panel we add back salaried physicians in practice in Newfoundland and Manitoba. With some minor adjustments, total medical service payments reported by the Department of National Health and Welfare refer to payments to these physicians. Salaries of hospital-based physicians are reported as hospital costs. The second and third panels report differing definitions of total civilian physicians supplying medical services, the second panel includes (hospital-based) interns and residents and the third does not. The second panel of Tables IIA and IIIA is thus more relevant to the measure of total medical services available; the first is relevant to total (reported) spending on medical services, while (reported) average physician income refers only to Tables II and III. Even at that the data are deceptive, however, since the physician counts are point-of-time and include physicians who worked part-time or part of the year only, or were just setting up practice. Thus the average incomes of full-time active fee practice physicians are understated (by about 10 per cent) in the reported data but these in turn probably overstate the incomes of all physicians as non-fee practice physicians generally have lower incomes.

TABLE II

Active Fee Practice Physicians Per 100,000 Population Canada and Provinces, 1957–69

	1957	1958	1959	1960	1961	1962	1963	1964	1965	1966	1967	1968	1969	% Inc.
Newfoundland	22.9	23.6	24.0	26.1	27.7	29.5	30.0	30.6	30.9	31.8	32.2	33.9	38.5	68.1
Prince Edward Island	66.7	66.0	66.3	65.0	64.8	64.5	65.8	65.1	66.1	67.9	68.8	70.0	73.6	10.3
Nova Scotia	66.8	67.4	67.9	69.9	71.6	73.5	74.0	74.3	74.5	76.6	79.4	81.3	84.2	26.0
New Brunswick	58.0	59.0	59.8	59.4	58.9	58.5	59.1	59.7	60.2	61.1	61.9	62.5	64.3	10.9
Quebec	73.6	74.8	76.2	76.6	77.0	77.5	77.9	78.4	78.9	81.8	82.5	83.3	84.9	15.4
Ontario	88.1	89.2	90.8	90.8	91.0	91.4	91.8	92.2	92.7	92.9	93.6	95.4	99.1	12.5
Manitoba	72.9	74.4	75.6	76.9	78.1	79.5	80.2	80.6	81.0	83.4	83.5	83.9	85.1	16.7
Saskatchewan	71.4	72.8	73.9	73.3	72.9	72.6	73.1	73.7	74.2	75.3	78.5	79.2	80.1	11.9
Alberta	73.3	73.7	74.2	73.7	73.5	73.6	74.1	74.6	75.1	77.2	81.3	86.2	91.0	24.1
British Columbia	94.5	95.6	98.4	100.6	103.3	105.8	106.2	106.8	107.5	105.9	105.0	108.2	117.0	23.8
CANADA	78.0	79.1	80.5	81.0	81.6	82.2	82.7	83.2	83.8	85.1	86.2	87.9	91.4	17.2

%Increase 1957–69: 17.2.

SOURCES: Canada, Department of National Health and Welfare, "*Earnings of Physicians in Canada, 1959–69*," Health Care Series No. 28, Ottawa, Oct. 1971. "*Earnings of Physicians in Canada, 1957–65*, Health Care Series No. 21, Ottawa, April 1967. Canada, Dominion Bureau of Statistics, *Vital Statistics 1969*, Ottawa, Queen's Printer, 1972.

TABLE IIA

Alternative Physician Stock Measures, by Province, Physicians per 100,000 Population

	Active Fee Practice Including Newfoundland and Manitoba Salaried Practitioners					Active Civilian Physicians—NHW			Seccombe House Narrow Definition			
	1965	1966	1967	1968	1969	1959	1962	1965	1958	1961	1965*	1969
Newfoundland	50.4	51.5	52.2	54.4	59.7	53.3	65.0	67.8	48.4	52.4	55.7	60.5
Prince Edward Island	66.1	67.9	68.8	70.0	73.6	81.2	81.3	80.7	77.0	86.7	82.6	70.9
Nova Scotia	74.5	76.6	79.4	81.3	84.3	90.1	98.5	102.0	80.7	91.6	97.9	101.7
New Brunswick	60.2	61.1	61.9	62.5	64.3	77.3	75.7	78.2	69.5	72.1	76.6	77.1
Quebec	78.9	81.8	82.5	83.3	84.9	108.4	110.4	112.8	87.6	95.6	97.6	97.8
Ontario	92.7	92.9	93.6	95.4	99.1	122.5	123.2	125.4	107.8	112.5	113.4	114.1
Manitoba	86.9	89.5	89.8	90.0	91.7	109.1	115.9	118.5	94.2	100.3	104.1	107.3
Saskatchewan	74.2	75.3	78.5	79.2	80.1	99.2	98.8	101.3	90.1	91.4	100.4	97.6
Alberta	75.1	77.2	81.3	86.2	91.0	99.4	99.9	102.4	87.1	93.3	100.2	105.1
British Columbia	107.5	105.9	105.0	108.2	117.0	122.4	133.1	135.8	113.7	124.7	125.9	128.8
CANADA	84.6	85.9	86.7	88.7	92.3	110.4	113.1	115.3	95.2	101.5	104.4	105.9

SOURCE: See Appendix 3–1.

*Data reported as 1965, but totals correspond to 1966 in later publication.

TABLE III

Active Fee Practice Physicians Per 100,000 Population by Province, Relative to National Average, 1957–1969

	1957	1958	1959	1960	1961	1962	1963	1964	1965	1966	1967	1968	1969
Newfoundland	0.29	0.30	0.30	0.32	0.34	0.36	0.36	0.37	0.37	0.37	0.37	0.39	0.42
Princ Edward Island	0.86	0.83	0.82	0.80	0.79	0.79	0.78	0.78	0.79	0.80	0.80	0.80	0.81
Nova Scotia	0.86	0.85	0.84	0.86	0.88	0.89	0.90	0.89	0.89	0.90	0.92	0.93	0.92
New Brunswick	0.74	0.75	0.74	0.73	0.72	0.71	0.72	0.72	0.72	0.72	0.72	0.71	0.70
Quebec	0.93	0.95	0.95	0.95	0.94	0.94	0.94	0.94	0.94	0.96	0.96	0.95	0.93
Ontario	1.13	1.13	1.13	1.12	1.12	1.11	1.11	1.11	1.11	1.09	1.09	1.09	1.08
Manitoba	0.93	0.94	0.94	0.95	0.96	0.97	0.97	0.97	0.97	0.98	0.97	0.95	0.93
Saskatchewan	0.92	0.92	0.92	0.91	0.89	0.88	0.88	0.89	0.89	0.89	0.91	0.90	0.88
Alberta	0.94	0.93	0.92	0.91	0.90	0.90	0.90	0.90	0.90	0.91	0.94	0.98	1.00
British Columbia	1.21	1.21	1.22	1.24	1.27	1.29	1.28	1.28	1.28	1.24	1.22	1.23	1.28

SOURCE: see Table II.

TABLE IIIA

Alternative Measures of Physician Stock Per Capita, by Province, Relative to National Average

	Active Fee Practice Including Newfoundland and Manitoba Salaried Practitioners					Active Civilian Physicians—NHW			Seccombe House Narrow Definition			
	1965	1966	1967	1968	1969	1959	1962	1965	1958	1961	1965*	1969
Newfoundland	0.596	0.600	0.600	0.613	0.647	0.483	0.575	0.588	0.508	0.516	0.534	0.571
Prince Edward Island	0.781	0.790	0.791	0.789	0.797	0.736	0.719	0.700	0.809	0.854	0.791	0.669
Nova Scotia	0.881	0.892	0.913	0.917	0.912	0.816	0.871	0.885	0.848	0.902	0.938	0.960
New Brunswick	0.712	0.711	0.711	0.705	0.697	0.700	0.669	0.678	0.730	0.710	0.734	0.728
Quebec	0.933	0.952	0.952	0.939	0.920	0.982	0.976	0.975	0.920	0.945	0.935	0.924
Ontario	1.096	1.081	1.076	1.076	1.074	1.110	1.089	1.088	1.132	1.108	1.086	1.077
Manitoba	1.027	1.042	1.032	1.015	0.993	0.988	1.025	1.028	0.989	0.988	0.997	1.013
Saskatchewan	0.877	0.877	0.902	0.893	0.868	0.899	0.874	0.879	0.946	0.900	0.962	0.922
Alberta	0.888	0.899	0.934	0.978	0.986	0.900	0.883	0.888	0.915	0.919	0.961	0.992
British Columbia	1.271	1.233	1.207	1.227	1.268	1.154	1.177	1.178	1.194	1.229	1.206	1.216

SOURCE: See Appendix 3–1.
*See note to Table IIA.

The weakness of the fee practice data (Tables II and III) as a measure of medical service availability is illustrated in a study conducted by the Castonguay Commission on the relative levels of hospital costs in Ontario and Quebec in the early and mid-1960s.[2] The Commission observed that in 1966 there were 1,090,475 outpatient visits to Quebec public general hospitals and only 651,319 in Ontario. Standardizing the Quebec data to the Ontario rate per patient day and comparing this with the actual number observed, they concluded that the additional volume of outpatient services accounted for $1.5 million of the spread between Ontario and Quebec hospital costs.[3] At the same time, the Commission notes that Quebec hospitals supported 1,649 residents and senior interns, and 643 junior interns, compared with 746 and 334 respectively in Ontario. This led to an estimated difference in medical education costs of $12.1 million in 1966. Now it is obvious that not all of this cost should be identified with costs of medical care. On the other hand there is evidence that the direct costs of outpatient visits and medical education substantially *understate* their overall impact on hospital budgets.[4]

Without being able to put a hard number on the difference, it seems clear that a substantially larger portion of medical care flows through the hospital system in Quebec than in Ontario. This would suggest that the data in the second panel, Tables IIA and IIIA, better reflect the relative supply of services in Quebec and Ontario (and presumably in every other province) than do Tables II and III. Unfortunately the "active civilian physician" data is only available for certain years and is not published after 1965. Moreover it is not related to the available income and price data, all of which is prepared relative to fee practice physicians only. But the reader should keep in mind, in subsequent discussion, that the relative supply of medical services is probably higher in Quebec, Manitoba, and Newfoundland, and lower in Ontario, B.C., New Brunswick, and P.E.I., than the fee practice data would indicate.

PHYSICIAN INCOME DATA

The average incomes reported for fee-practice physicians were converted to a relative basis by dividing each provincial average by the national average in each year, and the results are reported in Tables IV (gross of expenses of practice) and V (net of expenses before tax) physician income. Table V highlights the exceptional position of Newfoundland, with above average physician net incomes in all years in spite of overall very low provincial incomes. It must be recalled that a third to a half of the physicians in Newfoundland were salaried under the Cottage Hospital Medical Service or other plans, and the fee-for-service practitioners are probably heavily weighted toward specialists or older established physicians with relatively wealthier clientele.

---

[2] Commission d'Enquête sur la Santé et le Bien-être Social *Analyse Comparative des Coûts de l'Hospitalisation au Québec et en Ontario*, Annexe I du Rapport, Gouvernement du Québec, Septembre, 1969.

[3] One may of course question the choice of in-patient days as a base for comparison—why should any particular rate of out-patient visits to in-patient days be held up as a standard? Patient-days per thousand population are higher in Ontario, perhaps the out-patient visits *substitute* for in-patient care? The Commission's choice may have been dictated by the fact that almost all federal data on hospital costs and activity volume are standardized by in-patient days, however inappropriately.

[4] H. J. Kieferle, "Economic Aspects of Medical Education in Teaching Hospitals" (mimeo), Association of Canadian Medical Colleges, Ottawa, November, 1967. J. M. Horne *et al.*, "Medical Education in Canadian Teaching Hospitals: A Statistical Cost Analysis," (mimeo), Association of Canadian Teaching Hospitals, Ottawa, 1970. R. Evans and H. Walker, "Information Theory and the Analysis of Hospital Cost Structure," *Canadian Journal of Economics*, V, (3) August, 1972.

Like the data on physician availability, however, these income data are less firm than one might like. The gyrations of Saskatchewan in the period 1962–63 are not hard to understand; in 1962 receipts and incomes fell due to the physician strike as the provincial health insurance plan was introduced. In 1963 gross receipts leaped as physicians sent in bills held over from the previous year, experienced improvements in collections ratios and reduced their unreported incomes. In the net income data, one is struck by the very sharp improvement in the relative position of Nova Scotia and New Brunswick over the 1957–69 period. It turns out, however, that most of the improvement is due to a sharp drop of about one third in the average physician's expenses of practice in these two provinces from 1957 to 1958. In 1957 physicians in Nova Scotia and New Brunswick apparently reported 49.8 per cent and 45.6 per cent of their gross receipts as practice expenses, by 1958 this was down to 34.6 per cent and 36.5 per cent and by 1959 the average Nova Scotian physician had pared his expenses to 30.6 per cent! This *may* reflect some major underlying technological or market shift; but one can hardly avoid the suspicion that these data reflect either changes in reporting practices or just plain error.

The problem of practice expense reporting bedevils all efforts to interpret physician net income data, but it is not too serious so long as reporting practices do not shift over time (or across provinces). Physicians, like all other self-employed individuals, have opportunities to convert a portion of their private incomes into "business expenses" through use of cars, vacation/conventions, and many other dodges. The problem arises if one suspects that their ability to exploit such loopholes is either expanding or contracting. For example, from 1957 to 1967 physician net incomes rose faster than gross over the whole period and in almost every individual year. This is what one would expect—since medical prices are rising faster than the general price level they are probably also rising faster than prices of physicians' practice inputs and the difference shows up in increased net incomes. Then in 1968 the pattern seems to have changed, in both 1968 and 1969 expenses of practice rose faster than gross receipts in spite of historically high rates of increase of gross receipts. Reported expenses rose 12.6 per cent in 1968 and 9.2 per cent in 1969, while the average of weekly wages and salaries rose 6.9 per cent and 7.1 per cent and the general price level (measured by the Consumer Price Index) rose 4.1 per cent and 4.5 per cent. Now it may be that specific inputs used by physicians went up in price much faster than the price level generally, or that physicians substantially increased their use of other personnel and equipment. But some observers have also noted an increase in the business of supplying management consulting services to physicians during this period, a service which among other things increases the ability of the physician to take advantage of favorable tax provisions. Thus the growth patterns in net income may be biased

TABLE IV

Gross Professional Incomes of Active Fee Practice Physicians in Canada, by Province, Relative to National Average, 1957–69

	1957	1958	1959	1960	1961	1962	1963	1964	1965	1966	1967	1968	1969	% Increase
Newfoundland	1.10	1.10	1.08	1.18	1.05	0.94	0.97	1.00	0.96	0.96	0.94	1.01	1.12	128.0
Prince Edward Island	0.75	0.81	0.82	0.83	0.77	0.75	0.82	0.76	0.78	0.75	0.74	0.76	0.81	141.7
Nova Scotia	0.94	0.89	0.93	0.94	0.90	0.89	0.82	0.84	0.84	0.85	0.79	0.84	0.89	109.3
New Brunswick	0.89	0.88	0.83	0.93	0.94	0.91	0.92	0.91	0.90	0.86	0.93	0.91	0.91	130.0
Quebec	0.81	0.83	0.82	0.81	0.86	0.86	0.90	0.88	0.88	0.88	0.87	0.85	0.84	131.3
Ontario	1.06	1.06	1.05	1.05	1.05	1.06	1.07	1.09	1.09	1.09	1.10	1.11	1.10	132.6
Manitoba	1.14	1.13	1.20	1.06	1.12	1.10	1.00	0.95	0.98	0.95	0.95	0.94	1.06	108.1
Saskatchewan	1.09	1.06	1.03	1.12	1.05	0.88	1.24	1.19	1.14	1.13	1.06	0.97	0.97	98.4
Alberta	1.12	1.12	1.10	1.15	1.12	1.18	1.08	1.07	1.08	1.08	1.13	1.21	1.13	124.2
British Columbia	1.14	1.13	1.16	1.16	1.08	1.04	0.96	1.00	0.97	1.02	1.00	0.98	0.97	88.4
CANADA AVERAGE	20,804	22,103	22,910	24,288	25,862	26,322	28,690	30,586	32,799	35,223	38,675	42,783	46,328	
% INCREASE		6.2	3.7	6.0	6.5	1.8	9.0	6.6	7.2	7.4	9.8	10.6	8.3	

% Increase 1957–69: 122.7
% Annual Average: 6.9

SOURCES: See Table II.

TABLE V

Net Professional Incomes of Active Fee Practice Physicians in Canada, by Province, Relative to National Average 1957–69

	1957	1958	1959	1960	1961	1962	1963	1964	1965	1966	1967	1968	1969	% Increase
Newfoundland	1.25	1.22	1.15	1.26	1.13	1.06	1.04	1.05	1.04	1.00	0.98	1.07	1.23	135.1
Prince Edward Island	0.76	0.74	0.78	0.80	0.80	0.91	0.84	0.80	0.81	0.81	0.79	0.79	0.74	132.6
Nova Scotia	0.78	0.93	1.02	1.02	0.98	0.94	0.85	0.87	0.87	0.88	0.82	0.86	0.97	198.0
New Brunswick	0.78	0.90	0.85	0.99	0.99	0.97	0.95	0.94	0.92	0.89	0.95	0.96	0.96	196.1
Quebec	0.83	0.81	0.81	0.82	0.88	0.89	0.89	0.90	0.93	0.91	0.89	0.88	0.88	155.3
Ontario	1.08	1.09	1.07	1.06	1.07	1.08	1.10	1.09	1.10	1.09	1.12	1.12	1.10	143.7
Manitoba	1.05	1.03	1.06	1.02	0.96	0.99	0.97	0.91	0.89	0.93	0.89	0.91	1.03	134.4
Saskatchewan	1.08	1.05	1.03	1.01	0.96	0.86	1.16	1.17	1.07	1.04	0.95	0.88	0.90	99.0
Alberta	1.04	1.08	1.09	1.13	1.09	1.10	1.02	1.03	1.03	1.05	1.06	1.16	1.07	147.1
British Columbia	1.16	1.12	1.13	1.12	1.04	1.02	0.93	0.95	0.91	0.95	0.96	0.92	0.93	68.6
CANADA AVERAGE	12,852	13,778	14,950	15,735	16,472	16,970	18,688	20,484	22,064	23,262	26,093	28,615	30,861	
% INCREASE		7.2	5.9	7.8	4.7	3.0	10.1	9.6	7.7	5.4	12.2	9.7	7.8	

% Increase 1957–69: 140.1
% Annual Average: 7.6

SOURCES: See Table II.

downward by changes in reporting patterns, changes which are unlikely to be geographically uniform. (The increase in ratios of expenses to gross receipts, 1967–69, is almost entirely concentrated in Ontario, where the management consultant business is said to be expanding most rapidly).

PHYSICIAN MIGRATION RESPONSE TO INCOME DIFFERENTIALS

The physician stock and income data embody two causal patterns in the physician market model. Higher incomes might be expected to draw in physicians; on the other hand increases in physician:population ratios might drive down physician workloads and thereby incomes. (Depending of course on the significance of shortages or demand generation). These two forces may tend to cancel each other out. Fortunately, the pattern of impact of income on physician migration will differ from the influence of physician density on income in several ways. First of all, income should affect migration only with a lag because physicians must become aware of differences and then decide to react to them. Changes in physician stock should affect workloads directly. Secondly one might expect physicians to respond to net income differentials in making location decisions, while effects of density on workload should show up most strongly in gross receipts. And finally migration patterns should respond to *changes* in relative incomes, since income *levels* may very well differ from region to region without inducing migration. Income is only one item in the balance of "net advantages" of any occupation or location, and the fact that some regions with relatively high physician:population ratios also have relatively high physician incomes, such as Ontario, may indicate a disequilibrium situation with more flows *into* Ontario likely to occur, or informal barriers to entry, or a preference by non-Ontario physicians for the other aspects of life outside that region. In fact there is a weak tendency for net income and physician density to be positively correlated (if we disregard Newfoundland) and the only major aberration is British Columbia where the non-income locational advantages are reputed to be high!

Looking at changes over time in relative net income status, we would expect that a pattern of rising net incomes would draw in increasing numbers of physicians. Comparing Tables III and V, this notion is only weakly supported. In Alberta and Nova Scotia, a substantial increase in physician relative net incomes has been associated with increase in relative density, and the timing suggests a possible causal link. Relative net incomes rose substantially in both provinces in the late 1950s, and in Nova Scotia physician relative density rose in the early 1960s. The Alberta picture is less clear, physician density fell and then rose rapidly in the late 1960s contemporaneous with another surge in relative income. Saskatchewan similarly shows positive association, with a sharp decline in relative income and a moderate decline in density. The strike in 1962 makes interpretation difficult, but the drop in density takes place entirely over the period 1959–1962 which follows several years of declining relative income. In British Columbia the picture is mixed, high relative incomes in the late 1950s were associated with very high and rising relative density until 1962, but in the early 1960s relative income began to drop and so in the mid-1960s did relative density. In the late 1960s, however, a surge in relative density is unrelated to net income.

Elsewhere, the picture grows fuzzy. In Manitoba relative income and density have been unchanged over the whole period, but density first rose and then fell while income fell and then rose. The fall in density in the late 1960s may be related to falling relative incomes in the mid-1960s, and the early 1960s rise can be associated with high incomes in the late 1950s, but the relation is weak. Ontario shows a slow and steady downtrend in density but no significant income change. Quebec, on the other hand, shows a rise in income from 1957 to 1965 followed by a fall, but very little density response. A bump in density in 1966–67, followed by a fall, may reflect this but the change is too small to rely on. New Brunswick shows a sharp rise in income, followed by a smaller fall and rise; but no effect on a slow downdrift in density. P.E.I. shows a rise and fall in relative income, no density response. The Newfoundland data report a steady rise in relative density accompanied by a long drop in incomes all wiped out in a sharp two-year rise.

The overall picture is of some mobility in response to income factors in Alberta, Nova Scotia, Saskatchewan, and maybe British Columbia and Manitoba. The effects, however, are very weak relative to the whole market. This picture was confirmed by a set of regressions relating changes in relative physician density to different lags in gross and net income—the equations yielded positive and moderately significant coefficients (t values between two and three) on lagged income, with net income stronger than gross. Coefficients of determination were all less than 0.10, however, which hardly bears reporting! Thus it seems safe to conclude that while migration in response to income differentials may be observed (with a lag) in some provinces at some times; it is not a powerful force in shaping the Canadian physician market.

THE BEHAVIOR OF PHYSICIAN INCOMES

For short-run purposes, therefore, we can largely disregard income effects on the physician stock within a province. We now consider what interprovincial variations in relative incomes are consistent with the different causal connections in the market model. A model which emphasizes the role of shortages in driving up price in the traditional manner and treats demand as relatively need-determined would lead one to expect higher physician gross incomes where the physician: population ratio is low. This is both because the existing workload is divided among fewer physicians and because prices should tend to be higher. On the other hand, a model which emphasizes the role of income aspiration in setting prices does not predict any particular relation between physician density and gross or net incomes. It suggests that when density is high, exogenous workloads will be lower; but incomes will only be low if physicians are unable to generate additional workload *and* if price increases are restrained by exogenous factors. Similarly rising relative density will only be reflected in falling relative incomes if price and quantity responses are incomplete. The model suggests that one look at possible reference incomes to determine what might influence physician income targets, but does not specify what these reference incomes ought to be.

Looking at Tables III and IV we find that gross incomes per physician tend to be positively related to physician density, particularly when we recall that physician density in Manitoba is probably understated. Only in Newfoundland and British Columbia do we find a pattern of inverse relations between relative gross income and relative physician density, and the Newfoundland observation is known to be faulty. Considering rates of change, however, we note that relative gross incomes fell from 1957 to 1969 in B.C., Manitoba, Saskatchewan, and Nova Scotia, and rose in all other provinces. Relative physician density rose in B.C., Nova Scotia, Alberta, and Newfoundland, and was unchanged in Manitoba, falling elsewhere. Thus movements in relative gross incomes were in the opposite direction to movements in density in six provinces, including the three largest, while one of the four remaining is inconclusive (Manitoba) and one is unreliable (Newfoundland). Even the Alberta figure is doubtful, as Alberta's relative income status is almost the same in 1969 as in 1957.

Considerable fluctuation takes place within the individual provincial series, but on the whole it appears that a more rapid than average increase in physician density in a province tends to restrain the rise in gross incomes in that province. This suggests either that such an increase spreads workloads more thinly, and generation of new demand does not completely offset this; or that price increases are restrained by supply. It does not of course refute the demand generation hypothesis, since it must be emphasized that we are discussing *relative* values. In all provinces absolute increases in physician density and average gross income took place in almost every year. It is also possible that demand generation and price adjustment take place with a lag, so that changes in relative densities lead to temporary inverse changes in relative gross incomes but that once the relative densities stabilize at an arbitrary set of values the relative gross incomes will continue to adjust back to levels maintaining a positive static relation between gross income and density. At any point in time in the available data set, this weak positive association seems to be maintained.

If we look for evidence consistent with the hypothesis that physicians attempt to adjust both price and quantity supplied of their services in order to achieve a particular income target, the question immediately arises as to what target? If the target is an objective measure, such as a trend (in real or nominal terms) or average wages and salaries for the whole economy, then it would be possible to identify a regular relation between physician incomes and the trend variables. If, on the other hand, target incomes are dependent on the perceived incomes of other groups of physicians, then the hypothesis becomes difficult to test. Moreover if target incomes set in this way *do* drive prices and quantities, then the market has no self-limiting features and the inflation measured in chapter one can only be brought under control by outside intervention.

The evidence available is not consistent with the hypothesis that physicians generate target incomes on the basis of any broad economic aggregates. If we deflate annual increases in physician net incomes by either current or lagged values of the Consumer Price Index, no particular regularity emerges. This is not surprising given the irregular variation introduced by periodic fee schedule revision. Tables VI to XIII present measures of physician gross and net incomes in each province, relative to average wages and salaries and to personal income per capita, searching for any pattern of movement relative to the wage and income structure of the economy, In Tables IX and XIII we indicate the relative standing of physicians in each province, thus Table IX shows that in 1969 in Ontario the ratio of physicians' net earnings to average worker earnings was six per cent higher than the corresponding ratio for the country as a whole. In British Columbia in the same year this ratio was 15 per cent below average for the nation, indicating that physicians in British Columbia are not as far ahead of other British Columbia workers as are physicians in Ontario relative to the Ontario work force.

Tables VI to IX indicate that average wages and salaries rose 73.2 per cent from 1957 to 1969, while physician average gross and net earnings rose 122.7 per cent and 140.1 per cent respectively. Physicians' net earnings relative to the average Canadian worker rose 38.9 per cent in this period. Of course the income of the average worker may not be the relevant reference point for physicians, and a more relevant comparison may be the net earnings patterns of other self-employed professionals. Calculating the increase in the ratio of physicians' net earnings to those of other professionals, we find: engineers and architects 49 per cent; lawyers and notaries 18.3 per cent; dentists eight per cent, and accountants 39.4 per cent. The only group to have come close to growth rates for physicians are dentists, whose net incomes were 73 per cent of those of physicians in 1957 and 64 per cent in 1969.[5]

It thus appears that physician incomes have not been set relative either to wages and salaries generally, or to other self-employed professionals. The small lag of dentists behind physicians is more likely to indicate that dentists use physician incomes as targets than vice versa.

Physicians' incomes have risen somewhat less rapidly relative to *per capita* personal incomes (Table XIII); the tendency for personal income to outrun average wages and salaries presumably reflects changes in the employment structure and in dependency ratios. There are even provinces (Saskatchewan and Prince Edward Island) in which physician income has failed to outrun personal income. Nevertheless the broad aggregate picture is clear, physicians' incomes have moved up substantially faster.

---

[5] Data differ somewhat in concept from physician incomes reported in Tables IV and V. They are provided in *Earnings of Physicians, op. cit.*

TABLE VI

Yearly Wages and Salaries, 1957–1969
(Constructed From Average Weekly Wages and Salaries)

	1957	1958	1959	1960	1961	1962	1963	1964	1965	1966	1967	1968	1969
Newfoundland	3099	3118	3184	3396	3571	3660	3789	3927	4011	4234	4546	4953	5300
Prince Edward Island	2534	2558	2738	2750	2852	2905	3004	3084	3124	3209	3529	3622	4044
Nova Scotia	2818	2917	3009	3133	3199	3287	3423	3539	3672	3852	4132	4410	4726
New Brunswick	2867	2907	3020	3133	3178	3286	3423	3565	3738	3961	4263	4478	4840
Quebec	3259	3385	3528	3650	3777	3907	4052	4226	4431	4442	5058	5396	5712
Ontario	3528	3660	3820	3936	4057	4183	4330	4497	4721	4970	5293	5676	6078
Manitoba	3187	3343	3508	3586	3673	3776	3878	3952	4114	4223	4598	5023	5384
Saskatchewan	3263	3407	3507	3607	3710	3851	3969	4074	4245	4456	4789	5106	5395
Alberta	3481	3644	3782	3892	4023	4101	4206	4335	4494	4744	5043	5401	5898
British Columbia	3690	3794	4005	4149	4260	4372	4526	4725	5036	5371	5725	6037	6468
CANADA	3397	3522	3774	3792	3909	4030	4272	4334	4551	4817	5138	5494	5882

%Increase 1957-69: 73.2

SOURCE: Statistics Canada, unpublished statistics.

TABLE VII

Average Gross Professional Earnings of Active Fee Practice Physicians Relative to Average Wages and Salaries, Canada, By Province, 1957–1969

	1957	1958	1959	1960	1961	1962	1963	1964	1965	1966	1967	1968	1969
Newfoundland	7.36	7.81	7.75	8.42	7.61	6.78	7.36	7.80	7.88	7.96	8.03	8.73	9.81
Prince Edward Island	6.12	6.96	6.89	7.34	6.01	6.77	7.79	7.51	8.17	8.17	8.14	9.00	9.27
Nova Scotia	6.97	6.74	7.09	7.28	7.27	7.09	6.85	7.27	7.49	7.78	7.36	8.12	8.70
New Brunswick	6.42	6.72	6.26	7.19	7.62	7.30	7.71	7.80	7.92	7.64	8.42	8.89	8.75
Quebec	5.18	5.40	5.31	5.39	5.86	5.99	6.35	6.34	6.55	6.52	6.61	6.71	6.84
Ontario	6.24	6.40	6.32	6.49	6.71	6.64	7.08	7.38	7.57	7.70	8.07	8.36	8.42
Manitoba	7.43	7.49	7.86	7.19	7.92	7.68	7.42	7.36	7.79	7.95	7.97	7.98	9.15
Saskatchewan	6.95	6.90	6.76	7.51	7.31	6.03	8.98	8.96	8.83	9.01	8.59	8.14	8.34
Alberta	6.71	6.81	6.68	6.97	7.26	7.60	7.35	7.54	7.88	7.98	8.69	9.61	8.88
British Columbia	6.43	6.57	6.65	6.76	6.54	6.29	6.11	6.46	6.29	6.71	6.74	6.93	6.91
CANADA	6.12	6.28	6.07	6.41	6.62	6.53	6.72	7.06	7.32	7.53	7.53	7.79	7.88

SOURCES: Canada, Department of National Health and Welfare, "*Earnings of Physicians in Canada, 1959–69*," Health Care Series No. 28, Ottawa, Oct. 1971. "*Earnings of Physicians in Canada, 1957–65*," Health Care Series No. 21, Ottawa, April, 1967. Statistics Canada, unpublished statistics.

TABLE VIII

Net Professional Earnings of Active Fee Practice Physicians Relative to Average Wages and Salaries, Canada
by Province 1957–1969

	1957	1958	1959	1960	1961	1962	1963	1964	1965	1966	1967	1968	1969
Newfoundland	5.19	5.39	5.27	5.86	5.22	4.93	5.13	5.48	5.74	5.50	5.63	6.16	7.14
Prince Edward Island	3.86	4.00	4.17	4.58	4.60	5.31	5.25	5.34	5.71	5.89	5.87	6.25	5.63
Nova Scotia	3.56	4.41	4.93	5.13	5.02	4.84	4.63	5.04	5.21	5.29	5.20	5.59	6.32
New Brunswick	3.50	4.27	4.10	4.96	5.13	5.00	5.17	5.40	5.42	5.25	5.79	6.15	6.13
Quebec	3.27	3.27	3.34	3.53	3.83	3.88	4.12	4.39	4.63	4.48	4.57	4.65	4.77
Ontario	3.94	4.10	4.09	4.26	4.36	4.38	4.73	4.95	5.12	5.12	5.55	5.66	5.58
Manitoba	4.24	4.23	4.40	4.46	4.31	4.43	4.69	4.74	4.78	5.11	5.05	5.20	5.88
Saskatchewan	4.26	4.26	4.30	4.42	4.27	3.80	5.45	5.86	5.54	5.45	5.16	4.93	5.13
Alberta	3.86	4.07	4.21	4.56	4.46	3.53	4.54	4.87	5.05	5.13	5.47	6.15	5.62
British Columbia	4.04	4.08	4.23	4.24	4.00	3.95	3.86	4.14	4.00	4.13	4.40	4.35	4.46
CANADA	3.78	3.91	3.87	4.15	4.21	4.21	4.37	4.73	4.85	4.83	5.08	5.21	5.25

Sources: See Table VII

TABLE IX

Physicians' Net Earnings as a Multiple of Average Yearly Wages and Salaries, by Province, Relative to the National Average, 1957–1969

	1957	1958	1959	1960	1961	1962	1963	1964	1965	1966	1967	1968	1969
Newfoundland	1.37	1.38	1.36	1.41	1.24	1.17	1.17	1.16	1.18	1.14	1.11	1.18	1.36
Prince Edward Island	1.02	1.02	1.08	1.10	1.09	1.26	1.20	1.13	1.18	1.22	1.16	1.20	1.07
Nova Scotia	0.94	1.13	1.27	1.24	1.19	1.15	1.06	1.07	1.07	1.10	1.02	1.07	1.20
New Brunswick	0.93	1.09	1.06	1.20	1.22	1.19	1.18	1.14	1.12	1.09	1.14	1.18	1.17
Quebec	0.87	0.84	0.86	0.85	0.91	0.92	0.94	0.93	0.95	0.93	0.90	0.89	0.91
Ontario	1.04	1.05	1.07	1.03	1.04	1.04	1.08	1.05	1.06	1.06	1.09	1.09	1.06
Manitoba	1.12	1.08	1.14	1.07	1.02	1.05	1.07	1.00	0.99	1.06	0.99	1.00	1.12
Saskatchewan	1.13	1.09	1.11	1.07	1.01	0.90	1.25	1.24	1.14	1.13	1.02	0.95	0.98
Alberta	1.02	1.04	1.09	1.10	1.06	1.08	1.04	1.03	1.04	1.06	1.08	1.18	1.07
British Columbia	1.06	1.04	1.09	1.02	0.95	0.94	0.88	0.88	0.82	0.86	0.87	0.83	0.85
National Average	3.78	3.91	3.87	4.15	4.21	4.21	4.37	4.73	4.85	4.83	5.08	5.21	5.25
% Increase		3.4	−1.0	7.2	1.4	0	3.8	8.2	2.5	−0.4	5.2	2.6	0.8

% Increase 1957–1969: 38.9

SOURCES: See Table VII.

TABLE X

Personal Income Per Person, Canada, by Province, 1957–1969

	1957	1958	1959	1960	1961	1962	1963	1964	1965	1966	1967	1968	1969
Newfoundland	797	801	841	895	932	951	998	1070	1154	1274	1398	1467	1613
Prince Edward Island	778	820	941	942	943	1047	1056	1165	1248	1367	1532	1682	1818
Nova Scotia	1096	1130	1193	1242	1256	1307	1370	1452	1562	1713	1904	2072	2307
New Brunswick	970	998	1055	1104	1099	1147	1217	1311	1416	1571	1737	1897	2083
Quebec	1300	1320	1361	1411	1455	1532	1588	1710	1857	2045	2239	2406	2627
Ontario	1758	1798	1862	1904	1908	2007	2111	2222	2409	2648	2842	3065	3369
Manitoba	1384	1507	1558	1613	1546	1712	1727	1853	1969	2153	2407	2654	2845
Saskatchewan	1158	1272	1302	1461	1146	1604	1788	1616	1879	2154	2089	2386	2516
Alberta	1466	1580	1595	1615	1607	1711	1767	1821	1992	2281	2419	2645	2915
British Columbia	1789	1756	1828	1856	1843	1924	2022	2145	2334	2542	2693	2842	3121
CANADA	1475	1516	1569	1618	1613	1720	1802	1898	2066	2283	2461	2660	2913

% Increase 1957-69: 97.5

SOURCES: See Table VII.

TABLE XI

Average Gross Professional Earnings of Active Fee Practice Physicians Relative to Personal Income, Canada, by Province, 1957–69

	1957	1958	1959	1960	1961	1962	1963	1964	1965	1966	1967	1968	1969
Newfoundland	28.60	30.40	29.33	31.94	29.17	26.09	27.96	28.63	27.40	24.82	26.11	29.49	32.22
Prince Edward Island	19.94	21.72	20.04	21.42	21.21	18.79	22.17	19.88	20.50	19.23	18.09	19.37	20.63
Nova Scotia	17.92	17.40	17.89	18.36	18.50	17.83	17.12	17.73	17.60	17.49	15.96	17.29	17.82
New Brunswick	18.98	19.58	17.93	20.40	22.04	20.90	21.67	21.21	20.92	19.27	20.66	20.52	20.34
Quebec	12.99	13.84	13.76	13.93	15.20	15.29	16.21	15.68	15.62	15.11	14.94	15.04	14.87
Ontario	12.52	13.02	12.97	13.41	14.26	13.84	14.51	14.94	14.84	14.45	15.03	15.47	15.19
Manitoba	17.10	16.61	17.69	15.97	18.80	16.94	16.66	15.71	16.27	15.60	15.22	15.10	17.31
Saskatchewan	19.59	18.48	18.20	18.55	23.65	14.49	19.94	22.58	19.94	18.64	19.70	17.41	17.89
Alberta	15.94	15.71	15.83	17.36	18.18	18.23	17.49	17.95	17.77	16.60	18.11	19.62	17.97
British Columbia	13.27	14.19	14.57	15.12	15.12	14.29	13.68	14.22	13.57	14.19	14.34	14.72	14.33
Canada Level	14.10	14.58	14.60	15.01	16.03	15.30	15.92	16.11	15.88	15.43	15.72	16.08	15.90
% Increase		3.4	0.1	2.8	6.8	−4.6	4.1	1.2	−1.4	−2.8	1.9	2.3	−1.1

% Increase 1957–69: 12.8

SOURCES: See Table VII.

TABLE XII

Average Net Professional Earnings of Active Fee Practice Physicians Relative to Personal Income, Canada, by Province 1957–1969

	1957	1958	1959	1960	1961	1962	1963	1964	1965	1966	1967	1968	1969
Newfoundland	20.18	20.98	19.95	22.24	20.00	18.97	19.49	20.11	19.95	18.29	18.30	20.78	23.45
Prince Edward Island	12.58	12.48	12.14	13.36	13.91	14.75	14.94	14.14	14.29	13.83	13.52	13.46	12.52
Nova Scotia	9.15	11.38	12.42	12.94	12.79	12.18	11.56	12.29	12.26	11.91	11.28	11.89	12.95
New Brunswick	10.33	12.43	11.73	14.07	14.82	14.31	14.54	14.69	14.30	13.24	14.20	14.52	14.25
Quebec	8.21	8.44	8.67	9.12	9.93	9.90	10.51	10.84	11.06	10.38	10.33	10.44	10.37
Ontario	7.91	8.34	8.38	8.80	9.27	9.12	9.71	10.01	10.04	9.61	10.33	10.47	10.06
Manitoba	9.77	9.39	9.91	9.92	10.24	9.78	10.53	10.10	10.00	10.02	9.65	9.84	11.13
Saskatchewan	12.00	11.42	11.59	10.92	13.82	9.11	12.09	14.78	12.52	11.27	11.82	10.55	10.99
Alberta	9.16	9.38	9.99	10.99	11.15	10.88	10.82	11.60	11.39	10.68	11.41	12.56	11.38
British Columbia	8.34	8.82	9.27	9.48	9.26	8.98	8.64	9.12	8.62	8.74	9.35	9.23	9.24
CANADA	8.71	9.09	9.30	9.72	10.21	9.86	10.37	10.79	10.68	10.17	10.60	10.76	10.59

SOURCES: See Table VII.

TABLE XIII

Physicians' Net Earnings as a Multiple of Personal Income, Relative to The National Average
1957–1969

	1957	1958	1959	1960	1961	1962	1963	1964	1965	1966	1967	1968	1969
Newfoundland	2.32	2.31	2.15	2.29	1.96	1.92	1.88	1.86	1.87	1.79	1.73	1.93	2.21
Prince Edward Island	1.44	1.37	1.31	1.38	1.36	1.50	1.44	1.31	1.34	1.36	1.28	1.25	1.18
Nova Scotia	1.05	1.25	1.34	1.33	1.25	1.24	1.11	1.14	1.15	1.17	1.06	1.11	1.22
New Brunswick	1.19	1.37	1.26	1.45	1.45	1.45	1.40	1.36	1.34	1.30	1.34	1.35	1.35
Quebec	0.94	0.93	0.93	0.94	0.97	1.00	1.01	1.00	1.04	1.02	0.97	0.97	0.98
Ontario	0.91	0.92	0.90	0.91	0.91	0.92	0.94	0.93	0.94	0.94	0.97	0.97	0.95
Manitoba	1.12	1.03	1.07	1.02	1.00	0.99	1.02	0.94	0.94	0.98	0.91	0.91	1.05
Saskatchewan	1.38	1.27	1.25	1.12	1.35	0.92	1.17	1.37	1.17	1.11	1.12	0.98	1.04
Alberta	1.05	1.03	1.07	1.13	1.09	1.10	1.04	1.08	1.07	1.05	1.08	1.17	1.07
British Columbia	0.96	0.97	1.00	0.98	0.91	0.91	0.83	0.85	0.81	0.86	0.88	0.86	0.87
NATIONAL AVERAGE	8.71	9.09	9.30	9.72	10.21	9.86	10.37	10.79	10.68	10.19	10.60	10.76	10.59
% INCREASE		4.4	2.3	4.5	9.8	−3.4	5.2	4.1	−1.0	−4.6	4.0	1.5	−1.6

% Increase 1957–1969: 21.6

SOURCES: See Table VII.

TABLE XIV

Personal Income Per Person Relative to National Average
1957–1969

	1957	1958	1959	1960	1961	1962	1963	1964	1965	1966	1967	1968	1969
Newfoundland	0.54	0.53	0.54	0.55	0.58	0.55	0.55	0.56	0.56	0.56	0.57	0.55	0.55
Prince Edward Island	0.53	0.54	0.60	0.58	0.58	0.61	0.59	0.61	0.60	0.60	0.62	0.63	0.62
Nova Scotia	0.74	0.75	0.76	0.77	0.78	0.76	0.76	0.77	0.76	0.75	0.77	0.78	0.79
New Brunswick	0.66	0.66	0.67	0.68	0.68	0.67	0.68	0.69	0.69	0.69	0.71	0.71	0.72
Quebec	0.88	0.87	0.87	0.87	0.90	0.89	0.88	0.90	0.90	0.90	0.91	0.90	0.90
Ontario	1.19	1.19	1.19	1.18	1.18	1.17	1.17	1.17	1.17	1.16	1.15	1.15	1.16
Manitoba	0.94	0.99	0.99	1.00	0.96	1.00	0.96	0.98	0.95	0.94	0.98	1.00	0.98
Saskatchewan	0.79	0.84	0.83	0.90	0.71	0.93	0.99	0.94	0.91	0.94	0.86	0.90	0.86
Alberta	0.99	1.04	1.02	1.00	0.99	0.99	0.98	0.96	0.96	1.00	0.98	0.99	1.00
British Columbia	1.21	1.16	1.17	1.15	1.14	1.12	1.12	1.13	1.13	1.11	1.09	1.07	1.07
CANADA LEVEL	1475	1516	1569	1618	1613	1720	1802	1898	2066	2283	2461	2660	2913
% INCREASE		2.8	3.5	3.1	−0.3	6.6	4.8	5.3	8.9	10.5	7.8	8.1	9.5

SOURCE: Statistics Canada, unpublished statistics.

These tables highlight the problem of the target income approach—given the rate of advance of physician receipts what can one find as a target which has moved as fast? Some industry spokesmen have suggested that a more appropriate index might be after-tax income, Paul[6] and Gellman[7] have focussed on "average" fee practice physicians (in terms of tax structure and exemptions). This is an intriguing approach because, given the well-known levelling effects of a progressive tax system in an inflationary economy, it is obvious that take-home pay must rise less rapidly than gross or net receipts. It does not follow of course that *ratios* of take-home pay at different income levels should change, that depends on the internal structure of the system. Paul, however, argues that an "appropriate" level of gross compensation for physicians would be one which maintained this "take-home" ratio and therefore insulated physicians from the effects of progressivity in the tax system, a position which, if generalized to other occupations, would make it rather difficult to use the progressive income tax for income redistribution purposes! Paul asserts that this "take-home" ratio has been roughly stable in British Columbia from 1949–51 to 1971; in fact, however, an earlier chart published by the B.C.M.A. (on which this statement appears to be based)[8] shows clearly that physicians gained relative to the average worker over this period. Physicians' after-tax incomes rose about 165 per cent while other workers' income rose 148 per cent; so B.C. physicians gained about 6.9 per cent even on the B.C.M.A.'s income statistics. Moreover Table IX makes clear that the rate of increase of physician net incomes relative to wages and salaries has been *much* slower in B.C. than elsewhere in Canada. In Table VIII we see that the B.C. ratio rose only 10.4 per cent compared with a national average increase of 38.9 per cent. If the B.C. increase has led to a relative increase in take-home pay on Paul's definition, *a fortiori* the national increase must have been much greater. Thus national average trends in after-tax incomes do not seem to be acting as targets either.[9]

Gellman likewise focusses on after-tax income in defining net income, and his discussion of movements in after-tax income turns heavily on the cost of "fringe benefits", chiefly pension, which physicians must provide themselves but which salaried personnel receive as part of compensation. The comparison of such fringes is quite technical, but it seems that Gellman's assumptions about the relative values of guaranteed fixed benefit plans provided to most employees and registered retirement savings plans available to physicians are very difficult to sustain.

---

[6] J. B. Paul, "A Physicians' 'Take-Home Pay'," *B.C. Medical Journal*, 13, (2) February, 1971.

[7] D. D. Gellman, "Medicare, Medical Income Disparities and Fee Schedule Changes: Facts, Fallacies, Problems and Positions," *C.M.A. Journal*, Vol. 105 (September 18, 1971).

[8] "Notes From B.C. Medicare Plan," *B.C. Medical Journal*, 12, (2) February, 1970.

[9] Paul's argument that the ratio of physicians' after-tax incomes to average take-home pay "should" be maintained has another interesting feature. Not only does it counter the income equalization of the tax system, but it assumes that changes in relative skill mix should not affect this ratio. The "average" member of the labor force is becoming more skilled both because the skill content of each individual occupation tends to rise *and* because the proportion of highly skilled jobs in the economy is rising (although not in the health industry). Data are in S. Ostry, *The Occupational Composition of the Canadian Labour Force*, Ottawa, The Queen's Printer, 1967. Thus one would expect that any particular high skill occupational average should regress toward the all occupation average over time, simply due to shifts in the mix of occupations. It is interesting that physicians, dentists and lawyers all seem to have been able to stand against this trend, although none as strongly as physicians.

Nor is it clear why comparisons should be made between the average physician and the "average" senior executive or civil servant, since the latter represent the top end of the earning spectrum (and usually the age profile) in their particular occupations. Using such groups as reference points disregards the differential risks incurred by the two groups, senior executives are the result of a very long training and selecting process *during* their working lives in which most entrants to the occupation *do not* attain senior posts. Physicians are subject to selection only until the early years of medical school; after that they may or may not attain specialist rank, or high teaching and administrative posts. They are, however, virtually guaranteed entry to the ranks of physicians (undifferentiated) on whom Gellman's income data are based. A comparison using average data for specialists in their prime working years might have been revealing.

Debating the pros and cons of absolute income levels does not, however, take us much farther in determining how physician incomes are adjusted over time. Industry spokesmen certainly seem to support the *principle* of some sort of income target, the problem is that no such target can be found which moves with the observed rapidity of physician incomes. Some argue that this has been due to the effects of medical insurance, operating not on the demand side but through an unanticipated (in a policy sense) shift in collection ratios. Table IV would *appear* to support this position, if we examine movements in physician gross incomes over short periods. Incomes rose 41.2 per cent from 1965 to 1969, compared with 24.3 per cent from 1957 to 1961 and 26.8 per cent from 1961 to 1965. However Table IX yields the interesting observation that relative to average earnings in the economy, physician net incomes rose fastest in the middle period and slowest at the end. The ratio of physicians to all others rose 11.4 per cent 1957–61, 15.2 per cent 1961–65, and 8.4 per cent 1965–69. Thus physician net incomes have continued to improve steadily in relative terms but their biggest surge was *prior* to national health insurance.

Failure to discover any external standard on which physician targets appear to be based leads one to look at the internal structure of physicians earnings as indicated in Tables IV, V, IX, and XIV. These yield some regularities, in terms of interprovincial patterns over time. If we exclude Newfoundland, we find that out of 13 years of observations, Ontario has been first four times, second seven times, and third three times. Only once in the last five years has Ontario failed to be highest. Alberta has been first four times, second four times, and third four times, finishing "out of the money" once. In terms of relative income, however, physicians in Nova Scotia, Prince Edward Island, and Saskatchewan come out ahead due to the relatively low average earnings in those provinces. This remains true if we look at personal income, the relative income position of physicians is highest in the poorest provinces. This is in contrast to changes over time, as physicians' relative incomes have risen with rising national incomes.

Certain other provinces have occasionally achieved levels of income paralleling Alberta and Ontario. British Columbia was highest for three years in the late 1950s, fell to second, then to third, and has been below average ever since. In relative terms, B.C. physicians have had a falling relative income status over most of this period while Ontario and Alberta, in spite of being high average wage provinces, have maintained above average and slightly rising relative physician status.

The data are consistent with a leader/follower description, in which income targets are set on the basis of physician incomes in other provinces and a fairly stable relative structure is accepted. Except for a steady decline in the relative positions of B.C. and Saskatchewan, matched by a corresponding rise in the provinces east of Ontario most provinces seem to have maintained relative net incomes which fluctuate in the short run due to the timing of fee schedule changes but which maintain a stable relationship to one another. This could be due to all generating targets in the same way, or it could represent the use of Ontario (or Alberta) as a reference point. The trouble with such a description of behavior is that, while it is consistent with the observed behavior, it doesn't explain anything. Where do Ontario or Alberta targets emerge from? Why have B.C. and Saskatchewan behaved differently? Are targets based on assumptions about the economy which later prove conservative, so that actual out-turns (in terms of relative income movements) overshoot intended targets? The target-setting process may have strong political and psychological inputs which are not directly reflected in the available data.

PRICES OF MEDICAL SERVICES BY PROVINCE

The data examined thus far have revealed several relationships. Relatively high physician incomes in a province tend to draw in physicians but only weakly and with a lag. More rapid increases in physician stock seem to moderate the rise in physician incomes, implying either that prices rise less rapidly or that services per capita rise less rapidly (or both). Average physician incomes do not seem to be related either to a price adjusted trend or to incomes in the community around them—rather they seem to be related to average physician incomes in the rest of the country through a catch-up process which never succeeds. It is time now to try to fit price data into this set of relationships, since obviously pricing behavior is crucial to the income and locational data which we have been discussing. In theory, price data should be the centrepiece for this whole chapter: in fact the available data are so poor that we have been ashamed to drag them in before now.

The price data by province are drawn from three sources: the National Health and Welfare fee schedule indexes by province from 1963 combined with 1969 cross-province fee schedule comparisons (see Appendix 3-1), the Consumer Price Index medical care component for individual Canadian cities, and a series of price indexes constructed for 1961 and 1967 on a 1957 base for each of the major private health insurance plans, using services per 1000 members and average price paid per service for each plan as reported in the Annual Reports of Trans-Canada Medical Plans. (Details of construction are reported in Appendix 3-1.) In the case of the CPI component, data were only available for those 12 cities for which separate consumer price indexes are calculated, and these indexes were assumed to stand for the whole province. Thus the Newfoundland index is St. Johns' only; Quebec is Montreal only; Ontario is a weighted average of Ottawa and Toronto (using 1961 census population in the metropolitan area); Saskatchewan is a weighted combination of Regina and Saskatoon; and Alberta of Calgary and Edmonton. In each city the sample is heart-breakingly small, about five or six physicians. Thus one should not put too much confidence in the individual provincial indexes.

In Table XV we present (relatively) hard data on physician fee schedules from December 1963 up to 1969, by province, prepared by the Department of National Health and Welfare (excluding Quebec for which no fee schedules were available).[10] Then Table XVI reports the CPI medical care component for each province, with no indication as to the relative price levels across provinces, and the increase from 1963 to 1968 in each province is compared with that reported for fee schedules by the NHW index. Finally, Table XVII presents both Paasche and Laspeyres' indexes for certain provinces and regions for which private insurance plan data were available. (The Table XV indexes are Paasche, Table XVI are Laspeyres'). These indexes are based on extensive data and are probably the most reliable of all *with respect to the group covered*; the wrinkle is that physician billing behavior might differ between insured and uninsured patients, or that insured and uninsured may have quite different morbidity experience. Thus the reliability of these indexes for the whole population is dubious—the total number covered by such plans rises from 18 per cent to 29.4 per cent of the Canadian population, 1957 to 1967, but still the proportion is less than half in all provinces. On the other hand, as noted in chapter two the *per capita* expenditures of the TCMP population from 1957–1967 are very little different from the national averages.

Looking first at Table XVI, we observe that the CPI and the NHW index correspond quite closely in Ontario, Manitoba, Alberta and British Columbia, but deviate sharply in Newfoundland, Nova Scotia and New Brunswick. Since the CPI index is above the NHW in all provinces but Manitoba, one might conclude that the CPI is recording the fact that in each province actual prices are rising faster than list prices due to the slow elimination of the practice of price discrimination. It would be plausible to argue that price discrimination was more common in the lower income, eastern provinces at the beginning of the period and therefore the spread of medical insurance and rising personal incomes had led to a greater impact on actual physician prices from the elimination of this practice. Such a finding would be consistent with the observed more rapid increase of physician incomes in the Maritimes than in the western provinces (excepting, of course, Alberta). The problem with this line of argument, however, is that as noted in chapter one the reported rate of increase in the CPI physicians' fees component is *lower* than the NHW index on a Canada-wide basis. Nor can the discrepancy be traced to weighting shifts, since both CPI

---

[10] Unfortunately this "hard" date pertains to schedules *in effect*, not to *rates paid* by provincial plans. National Health & Welfare has begun to prepare cross-province data on rates paid, but these do not go back to 1963.

TABLE XV

Interprovincial Comparisons of Increases in the Official Fee Schedules Rates, Annual Averages, 1964–1969
(Canada: December, 1963 = 100)

	Dec. 1963	1964	1965	1966	1967	1968	1969	% Inc.
Newfoundland	97.3	97.3	97.3	97.6	103.2	114.1	114.1	16.7
Prince Edward Island	90.7	101.6	101.6	102.0	102.2	117.1	117.1	47.3
Nova Scotia	102.9	102.9	102.9	102.9	108.7	126.2	126.2	22.7
New Brunswick	90.6	90.6	90.6	102.1	113.7	116.7	125.6	38.6
Ontario	97.3	97.3	103.0	104.9	113.7	116.7	124.6	30.8
Manitoba	106.9	106.9	106.9	106.9	118.7	142.3	142.3	33.1
Saskatchewan	98.5	98.5	98.5	98.5	109.8	121.3	121.3	23.1
Alberta	96.0	97.7	99.8	103.2	112.2	119.6	125.3	35.3
British Columbia	115.8	120.1	120.1	120.1	132.0	132.0	132.0	21.7
CANADA	100.0	100.8	103.9	105.7	114.2	120.4	127.3	27.3

SOURCE: Department of National Health and Welfare, unpublished statistics.
Data for Quebec not available.

and NHW indexes are constant base weighted, the latter using current weights only within provinces. It may be that the result is partly due to Quebec, whose price increase is reported in Table XVI (on the basis of a handful of general practitioners in Montreal!) as far below average, and which is not included in the NHW index. Moreover, it may be that the cities included in the CPI but not tabulated independently by Statistics Canada (and hence not included in Table XVI) behave differently and have had less rapid rates of price increase, although they make up only 27 per cent of the total weights in the CPI. In any case the discrepancy between the behavior of the overall CPI medical care index and its components, when compared with the NHW index, underscores the dubious reliability of the existing price data.

TABLE XVI

CPI-Based Provincial Price Indexes
1957 = 100, Each Province

	Oct. 1961	Oct. 1963	Oct. 1968	% Change 1963–68	% Change NHW Index (October, 1968)
Newfoundland	111.4	122.7	162.2	32.2	16.7
Prince Edward Island	—	—	—	—	28.6
Nova Scotia	106.6	107.7	151.3	40.5	26.2
New Brunswick	104.8	110.9	152.1	37.2	25.4
Quebec	116.2	124.7	144.7	16.0	—
Ontario	104.1	111.3	134.5	20.8	20.0
Manitoba	105.1	119.1	155.1	30.2	33.1
Saskatchewan	116.3	117.4A	—	—	23.1
Alberta	129.2	129.7	169.8	30.9	27.3
British Columbia	118.6	116.1	134.2A	15.6	14.0

A = April, Saskatchewan index discontinued after April 1963; B.C. index discontinued after April 1968.

Source: Statistics Canada, Prices Division, CPI Metropolitan Area Physicians' Fee Indexes: each province is represented by its metro area. ONT (Toronto, Ottawa); SASK (Regina, Saskatoon) and ALTA (Calgary, Edmonton) have two city indexes combined with 1961 Census weights.

Going to Table XVII, we observe first that the Paasche and Laspeyres' indexes are virtually identical for the insured groups. This is very surprising, in view of the large relative shifts in rates of utilization per thousand persons for different categories of medical service which in fact took place. There is no systematic tendency for the Paasche indexes to lie above the Laspeyres' or vice versa over the period 1957–67, which implies increases in utilization rates for classes of service independent of price increases. The indexes in Table XVII may be compared with the first three columns of Table XVI, from which we note that the 1967 indexes look quite consistent for B.C., Alberta, and Manitoba. In Ontario, Quebec, and the Maritimes, however, the pattern is quite different. The insurance plans index rises considerably faster than the CPI in Ontario—in Quebec and the Maritimes the picture is reversed. In comparing the 1961 indexes we find that this correspondence breaks down, and that the insurance companies' indexes of fees paid in general rose faster during the period 1957–61 then did the CPI index. This suggests that the CPI index must have made a surge in the later period to catch up, and we do in fact observe such a surge. Since the CPI rose at about the same rate outside the Maritimes as the NHW index, this surge must have been reflected in fee schedules. Thus we conclude that physician service prices rose more rapidly for the insured than for the uninsured over the period 1957-61 (or -63) and more rapidly for the uninsured over the period 1963–68. This phenomenon could be explained in conventional terms as physicians taking advantage of decreased elasticity of demand by the insured in the 1957–61 period, then catching up by raising everyone else's prices later.

TABLE XVII

Price Indexes for Medical Services
Paid for by Private Insurance Plans by Province

	Laspeyres'		Paasche	
	1961	1967	1961	1967
Maritimes*	—	139.9	—	139.0
Quebec	110.5	135.4	111.7	134.6
Ontario	109.2	154.9	109.8	158.1
Manitoba	119.3	150.0	124.9	151.6
Alberta	135.1	170.3	135.5	167.8
British Columbia	125.4	137.9	121.7	133.4

Source: Annual Reports of Trans-Canada Medical Plans, 1957, 1961, 1967.

* Indexes for Maritimes 1961 not calculated due to apparent definitional shifts in the data.

On the basis of this sketchy and often conflicting evidence, what can one say about relative price levels across provinces or changes within provinces? We can answer the former question only from 1963 to 1968. But it appears that prices were initially highest (16 per cent above the Canada average) in British Columbia, with Manitoba and Nova Scotia second and third. Since then, price increases have been slow in British Columbia, but in 1968 (when our income data end) they were still 10 per cent above average. Manitoba remains well above average, but Nova Scotia has been more restrained in its price increases and by 1969 had price levels just slightly below average. There is a slight tendency for provinces with above-average price levels in 1963 to have had below-average rates of increases (two out of three) and for below-average provinces to have increased faster (four out of six, and one of the two remaining is Newfoundland). This picture changes slightly, however, if we look at the CPI data in Table XVI since both Nova Scotia and Manitoba prices rise faster than average although both have higher than average initial prices. Ontario becomes below average initially and below average in growth rate. Thus the tendency may be for fee schedules, rather than actual prices paid, to tend to equalize. But it is difficult to tell what is really happening since neither the CPI data nor the Trans-Canada Medical Plans data are compiled to make interprovincial comparisons.

We do observe, however (referring back to Tables II and III) that there is no tendency for prices to be lower in provinces where physicians are more plentiful. British Columbia has the highest prices and the highest physician density most years, Manitoba moves from second-highest to highest in price level while its physician density is near or above average from 1963 to 1968 (depending on which definition of physician stock one accepts). The Maritime provinces other than Nova Scotia have low prices and low physician density throughout—Nova Scotia has relatively high prices and physician density. Thus one must either reject the notion that relative shortages drive up price, or one must argue that shortages, as they impinge on prices, are not closely related to physician density. Thus prices might be low in Prince Edward Island because, although the physicians per capita ratio is low, there is simply not much demand per capita. In British Columbia, on the contrary, prices are high because demand is high, so much so that there is still a relative "shortage" of physicians in spite of the fact that the number per capita is more than 20 per cent above the national average. To check this possibility we will want to look at the relationship between changes in physician density and changes in prices, taking price levels as representing underlying demand conditions. For these purposes we need to look at the longer period, since changes in prices 1963–68 are too much influenced by the timing of fee schedule changes.

Examining Tables II, XVI, and XVII, we find that prices from 1957 to 1967 have risen fastest in Alberta on both CPI and TCMP indexes, yet physician density rose far faster than average in Alberta. Manitoba is similar, with rapid rises in prices and density. In British Columbia, density rose more rapidly than average while prices were sluggish, but in fact relative physician density in British Columbia first rose and then fell in this period, while both CPI and TCMP data indicate that prices rose fast, then slowed down. Ontario combined moderate price increases with moderate increases in physician density—both below average. The price data for the Maritimes are so mixed that a firm statement is impossible, but we note that physician density increased very fast in Nova Scotia and very little in Prince Edward Island or New Brunswick. The CPI reports that prices rose faster in Nova Scotia (Halifax) than in New Brunswick (Saint John). Thus the evidence of both price levels and price changes is strongly against the hypothesis that relative density has a negative impact on price (as in the standard economic model). Unless we wish to argue that it has a positive direct impact (as opposed to an indirect effect through workload and income, which *would* be positive), we are justified in assigning a value of zero to p_2 in our model in chapter two. We can disregard physician scarcity as a factor leading to upward pressure on medical prices.

The alternative hypothesis of course is that prices are determined by desired income levels. In this case we should expect to find a tendency, as we do above, for prices to be lower when physician density is lower *unless* increased physician density always calls forth greater utilization per capita and results in no diminution of physician workload.

We concluded above, however, that physicians' incomes tend to rise less rapidly when density rises more rapidly, implying either that there is a negative influence from density to prices or that workloads per physician fall as density rises. We have now ruled out the former effect, so we can conclude that workload is not sustained when density rises. This means that an income-oriented pricing policy would lead to more rapidly rising physician prices when physician density is rising more rapidly. In terms of our model,

$$p_2 = 0, 0 < p_1 < 1, 0 < q_1 < 1.$$

Unfortunately, in general we do not find a good relation between prices and net physician incomes. We would like to find that prices rose most rapidly in provinces with the lowest incomes, but this pattern is not clearly evident. British Columbia, with the highest relative net income in 1957, had the slowest rate of price increase (Tables V, XVI, XVII) but right next door Alberta had both above-average income and very rapid price increase. Both Manitoba and Saskatchewan had above-average net incomes early in the period; one had above average price increases, the other had below average, and in both relative income has declined. Ontario has had high and rising relative income status, with lesser or greater price change depending on whether one uses Table XVI or Table XVII price indexes. The problem is that the hypothesized dependence of prices on income is on income relative to some target level—and this need not be constant over provinces or over time. Physicians in Alberta seem to march to a different drummer (or banker) so one cannot be sure of proving anything by reference to observed relative net income. Nevertheless, the evidence is rather more favorable than not to the hypothesis of income-oriented pricing.

In summary: we argued that the quality of available price data was too poor to justify attempting to fit the model of chapter two, and proceeded to examine the available data in a more free-handed fashion to see how well it conformed to the model's predictions. We observed that changes in the relative level of physicians per capita in a province were related very weakly and with a lag to the relative level of net physician income. We found that physician incomes did not appear to be determined by any effort to maintain real incomes in level or trend form, nor did they appear to relate to other incomes in the community. It does appear, however, that physicians seek to raise their incomes to catch up with physicians in other provinces, and that this catch-up mechanism is showing no sign of topping out—the leader province is as far ahead as ever. Moreover, rapid increases in relative physician density tend to restrict the rate of increase of incomes; this is due not to negative pressure on prices—if anything an increase in physician supply appears to push prices up. But physician work load falls as relative density increases—the "demand" for services may be positively influenced by the supply but does not quite keep pace with it. Finally, observations on changes in prices and physician density refuted the notion that increased supply might hold down price but provided only weak support for the view that prices adjust to reach desired physician income levels.

APPENDIX 3–1

CONSTRUCTION OF PROVINCIAL MEDICAL INDEXES

Comparative provincial medical indexes were calculated with data from two main sources—Department of National Health and Welfare and Trans-Canada Medical Plans. Department of National Health and Welfare data consisted of two tables: one was an intraprovincial comparison of fee schedule changes, in percentage terms, as they occurred from January 1964 through to January 1970 with each individual province having a base of December 1963. The second table gave an interprovincial comparison showing differences between the fee schedules in effect September 1, 1969 based on Ontario = 100.

An index was calculated from this data, the main steps of which are illustrated in the table below.

	Population Proportions (Wi) (1)	P^i_{69}/P^o_{69} (2)	P^i_{69}/P^i_{63} (3)	P^i_{69}/P^o_{63} (4)	P^i_{63}/P^o_{63} (5)	P^i_{63}/P^o_{63} (6)
Newfoundland	0.0352	89.2	116.66	116.66	100.00	97.3
Prince Edward Island	0.0080	92.0	129.11	120.32	93.19	90.7
Nova Scotia	0.0551	99.2	122.70	129.73	105.73	102.9
New Brunswick	0.0446	98.7	138.57	129.08	93.15	90.6
Ontario	0.4838	100.0	130.78	130.78	100.00	97.3
Manitoba	0.0700	108.7	133.10	142.16	106.81	106.9
Saskatchewan	0.0687	95.3	123.10	124.63	101.24	98.5
Alberta	0.1043	102.1	135.28	133.53	98.71	96.0
British Columbia	0.1273	110.8	121.72	144.90	119.04	115.8

Data for Quebec not available.

*Provincial indexes to the base Canada 1963 = 100.

P^i_{69}/P^o_{69} is the information given in the second table, i.e., the fee schedule index for the ith province relative to that of Ontario set equal to 100. The third column shows the percentage increase in 1969 in the individual provinces based on 1963 = 100—the information given in the first table.

From column (3) Ontario 1969 relative to Ontario 1963 can be found—$P^o_{69}/P^o_{63} = 130.8$. Therefore, multiplying column (2) by 130.8:

$$(P^i_{69}/P^\circ_{69}) \times (P^\circ_{69}/P^\circ_{63}) = (P^i_{69}/P^\circ_{63}) \qquad \text{Column (4)}$$

i.e. price indexes for the individual provinces in 1969 relative to Ontario, December 1963 = 100.

In order to relate the provincial indexes to a common base, column (4) was divided by column (3). Now we have a set of information showing the difference between provinces in the base year (i.e., P^i_{63}/P^o_{63}) but only relative to Ontario. A system of weights was needed to convert the information to a Canada-wide base—the proportion of population within each province as of June 1, 1964 (w_i—column (1)) was chosen since these weights are used by NHW in calculating a nine-province aggregate index. Proportions were calculated excluding Quebec since Quebec did not have a fee schedule during this period.

Multiplying column (1) (w_i) by column (5) (P^i_{63}/P^o_{63}) and summing ($\sum_i w_i P^i_{63}/P^o_{63}$) = 1.02518. If, however, instead of considering $P^o_{63} = 100$, we define $\sum_i w_i P^i_{63} = 100 = P^c$, a nine-province index based on December 1963, then $P^o_{63} = 97.5$. It turns out, however, that due to a round-off $\sum_i w_i = .997$ rather than 1.0 so that the correct calculation is $P^o_{63} = \sum_i w_i P^i_{63} = 99.7 \div 1.02518 = 97.3$.

Thus for Canada = 100, Ontario = 97.3, both fee schedule indexes based on December 1963. From this base a new table can be constructed for the whole of Canada since column (5) (P^i_{63}/P^o_{63}) can be converted to a base of Canada 1963 = 100 by multiplying the index for the individual province by 97.3 and dividing by 100.

Returning to the data on fee schedule changes provided by NHW, we note that fee schedule changes normally take place within a year. Thus the average fee level in a province for any one year will be the weighted combination of those fee schedules in effect during the year. If for example a fee schedule level were indexed on 100 at the beginning of a year, and in April a new schedule was brought in with an average price increase (as measured by the Department of National Health and Welfare) of 10 per cent, the index for that year as reported in Table XV would be $1/4\ (100) + 3/4\ (110) = 107.5$, since three months, or one quarter of the year, was governed by the old schedule (timing within a month was ignored).

As an alternative to the indexes calculated from the Department of National Health and Welfare figures, statistics from the Trans-Canada Medical Plans were used which report actual amounts paid to physicians per procedure by the various pre-medicare private insurance plans. Four main sections were considered—medical care, surgical care, obstetrical care and "other services" section which included X-rays and anaesthetics. Price of the service within each section plus utilization per thousand persons were tabulated by insurance plan.[1] For each component the price × quantity was calculated for 1957, 1961 and 1967 and also price in 1967 (P_{67}) × quantity in 1957 (Q_{57}), price in 1961 (P_{61}) × quantity in 1957 (Q_{57}), price in 1957 (P_{57}) × quantity in 1967 (Q_{67}) and finally price in 1957 (P_{57}) × quantity in 1961 (Q_{61}). These were then sub-totalled for each of the four main sections within each insurance plan.

---

[1] Basic data sources were tables reported in the Trans-Canada Medical Plans, *Annual Reports* for the years 1957, 1961 and 1967, the first being provided from back files by Mr. Shillington, General Manager of Healthco (99 Avenue Road, Toronto, Ont.) and formerly director of Trans-Canada Medical Plans, and the latter two by the Research and Statistics Directorate of the Department of National Health and Welfare.

Laspeyres' and Paasche price indexes were then calculated for each province, first 1961 compared to 1957 (= 100) and then 1967 compared to 1957 (= 100) using the definitions:

$$L_{61} = \frac{\sum\limits_{i} P^{i}_{61} Q^{i}_{57}}{\sum\limits_{i} P^{i}_{57} Q^{i}_{57}} \qquad L_{67} = \frac{\sum\limits_{i} P^{i}_{67} Q^{i}_{57}}{\sum\limits_{i} P^{i}_{57} Q^{i}_{57}}$$

$$P_{61} = \frac{\sum\limits_{i} P^{i}_{61} Q^{i}_{61}}{\sum\limits_{i} P^{i}_{57} Q^{i}_{61}} \qquad P_{67} = \frac{\sum\limits_{i} P^{i}_{67} Q^{i}_{67}}{\sum\limits_{i} P^{i}_{57} Q^{i}_{67}}$$

Medical Services (Alberta) Inc. was considered to represent the rise in fee schedule rates for Alberta and similarly Manitoba Health Service for Manitoba, Quebec Hospital Service Association for Quebec and B.C. Medical Services Association for British Columbia. For Ontario and the Maritimes, however, two different insurance schemes had to be considered. Figures for Ontario included data from both Physicians Services Incorporated and Windsor Medical Services Incorporated. Similarly, the Maritime index included figures from the Maritime Medical Care Incorporated and Maritime Hospital Service Association. These were combined by using a weighting scheme based on the enrolment in each plan at the end of June in the respective years. For example, to calculate the Laspeyres' index for Ontario in 1961 the following equation was used:

$$\frac{\Sigma P^{PSI}_{61} \cdot Q^{PSI}_{57} \times \underset{\text{June 1957}}{\text{enrolment in PSI}} + \Sigma P^{WMS}_{61} \cdot Q^{WMS}_{57} \times \underset{\text{June 1957}}{\text{enrolment in WMS}}}{\Sigma P^{PSI}_{57} \cdot Q^{PSI}_{57} \times \underset{\text{June 1957}}{\text{enrolment in PSI}} + \Sigma P^{WMS}_{57} \cdot Q^{WMS}_{57} \times \underset{\text{June 1957}}{\text{enrolment in WMS}}}$$

The final figures for the five areas are given in Table XVII in the text. Figures for Saskatchewan are not calculated since during the period under consideration provincial insurance was introduced.

A similar population-based weighting scheme was employed in constructing interprovince indexes for sub-components of the whole service market. Thus in chapter four we report indexes in Table XIX for medical care (visits of various types), surgical care, obstetrical services, and other. Each of these is built up from the products of ${}_{R}P^{i}_{t}$ (price of the ith service in the Rth region in time t): ${}_{R}Q^{i}_{t'}$ (quantity of the ith service, Rth region, time period t′ which may or may not equal t), and population of the Rth region in time t′. Since all indexes can be seen to have the same vectors of per capita quantities and populations in both numerator and denominator, their values depend only on changing prices.

APPENDIX 3–2

ADJUSTMENT OF POPULATION DATA FOR AGE–SEX DISTRIBUTION

Studies of the demand for medical services often treat population as a homogeneous group; but even from a brief look at reality one can see that there are great differences in the use made of medical facilities by different age-groups and between the sexes. Thus if a study of demand for medical services is to yield reasonable results, an adjustment for such differences should be integrated into the analysis.

Unfortunately, there are few studies that give any basis for constructing a series of weights that could be used to adjust population figures for age–sex differences. Robert Kohn in *The Health of the Canadian People*[1] gives a tentative breakdown by age group (0—15, 15–44, 45–64, 65+) of the estimated total amounts paid for physicians' services in Canada in 1961. Population figures were taken for the same year and a weighting scheme was then devised whereby the average amount of money paid for physicians' services within each age group was related to the total population and the total amount paid for physicians services, in the following way:

$$w_i = \frac{P}{S} \times \frac{S_i}{P_i} = \frac{\text{services per capita in ith age group}}{\text{average services per capita}}$$

where

w_i is the weight attached to the ith age category;

P is the total population in Canada;

P_i is the number of people within the ith age category;

S is the total estimated amount paid out for physicians' services;

S_i is the amount paid out within the ith age category.

$\hat{P}_i = w_i P_i$ is the adjusted population in the ith age group such that expected expenditure on medical services is equal per head of adjusted population across age groups, and

$$\sum_i \hat{P}_i = \sum_i w_i P_i = P.$$

These weights were then multiplied by the population figures within each individual age group to get the final adjusted population for 1961, as shown in Table A.2–1.

Total actual population and total adjusted population should, of course, be the same since the weighting system was based on a series of relatives.

---

[1] Robert Kohn, *The Health of the Canadian People*. A study prepared for the Royal Commission on Health Services, Ottawa, Queen's Printer, 1965, p. 301.

TABLE A.2-1

Adjustment of Population Figures for 1961

Age Group	Actual Population	Physicians' Services ($)	Weights	Adjusted Population
0–15	6191.9	65.1	0.5004	3098.4
15–44	7487.2	161.0	1.0234	7662.4
45–64	3168.0	92.0	1.3822	4378.8
65+	1391.2	65.1	2.2272	3098.5
Total	18238.3	383.2		18238.1

These weights were then used to construct two further tables. Table A.2–2 shows the behavior of adjusted population, Canada-wide, over time and Table A.2–3 shows the effect of adjusting population within provinces at a single point in time (1968).

TABLE A.2-2

Adjustment to Population 1968

	Actual Population ('000)				
	0–15	15–44	45–64	65+	Total
Newfoundland	199.0	203.0	75.1	29.9	507.0
Prince Edward Island	36.7	41.8	19.6	11.9	110.0
Nova Scotia	246.3	303.2	142.4	68.1	760.0
New Brunswick	215.3	249.7	107.8	51.2	624.0
Quebec	1896.2	2645.9	1012.8	372.1	5927.0
Ontario	2233.9	3117.6	1361.0	593.5	7306.0
Manitoba	298.5	390.1	191.1	91.3	971.0
Saskatchewan	311.0	373.7	184.4	90.9	960.0
Alberta	316.2	639.6	260.9	109.3	1526.0
British Columbia	593.5	840.0	388.4	185.1	2007.0
Yukon & Northwest Territories	18.9	19.9	5.8	1.4	46.0
Total					20,744

	Adjusted Population ('000)				
	0–15	15–44	45–64	65+	Total
Weights	(0.5004)	(1.0234)	(1.3822)	(2.2272)	
Newfoundland	98.0	204.5	102.2	65.6	470.3
Prince Edward Island	18.1	42.1	26.7	26.1	113.0
Nova Scotia	121.3	305.5	193.8	149.4	770.0
New Brunswick	106.0	251.6	146.7	112.2	616.5
Quebec	933.8	2665.6	1378.2	815.9	5793.5
Ontario	1100.1	3140.9	1852.1	1301.3	7394.4
Manitoba	147.0	393.0	260.0	200.2	1000.2
Saskatchewan	153.2	376.5	251.0	199.3	980.0
Alberta	254.2	644.4	355.0	239.6	1493.2
British Columbia	292.3	846.3	528.5	405.8	2072.9
Yukon & Northwest Territories	9.4	20.1	7.9	3.1	40.5
Total					20,744

Obviously this weighting scheme has drawbacks. It assumes that the 1961 relative demand for physicians' services is constant both over time and provincially. Also there has been no allowance for differences in utilization of medical facilities by sex, differences which vary facilities with age. The whole scheme is based on figures that were only estimated in the first place and could therefore be inaccurate. However, the concept of adjusting population according to the different age–sex structures across provinces would seem like an obvious first step before any policy measures are set in motion bearing on medical services per capita. If one insists on examining physicians per capita, it is surely preferable to look at adjusted population. Still more important, federal programs designed to equalize payments per capita for medical services across provinces can hardly be justified if these differences are disregarded. Good quality data on utilization by age and sex nation-wide are now becoming available, and should be used in calculating federal payments under cost sharing programs for medical services, and as Table A.2–3 makes obvious, the impact across provinces is highly significant. Since such data are now available, continuation of the present Medicare program of making payments to provinces based on national per capita expenditures represents a transfer from provinces with relatively aged populations to those with relatively young populations. Since such a transfer policy does not appear based on any principles of interprovincial equity.

TABLE A. 2-3

Adjustment of Population Through Time

Year	Actual Population					Adjusted Population				
	0–15	15–44	45–64	65+	Total	0–15	15–44	45–64	65+	Total
1958	5685.2	7183.2	2916.6	1295.0	17080.0	2844.9	7351.3	4031.3	2884.2	17111.7
1959	5857.7	7288.6	3007.9	1328.8	17483.0	2931.2	7459.2	4157.5	2959.5	17507.4
1960	6030.0	7392.0	3090.2	1357.8	17870.0	3017.4	7565.0	4271.3	3024.1	17877.8
1961	6191.9	7487.2	3168.0	1391.2	18238.3	3098.4	7662.4	4378.8	3098.5	18238.1
1962	6309.7	7611.2	3243.1	1419.0	18583.0	3157.4	7789.3	4482.6	3160.4	18589.7
1963	6417.9	7751.0	3314.1	1448.0	18931.0	3211.5	7932.4	4580.7	3225.0	18949.6
1964	6499.3	7926.2	3388.4	1477.1	19291.0	3252.2	8111.7	4683.4	3289.8	19337.1
1965	6556.3	8110.3	3470.7	1506.7	19644.0	3280.8	8300.1	4797.2	3355.7	19733.8
1966	6591.7	8325.7	3557.9	1539.6	20014.9	3298.5	8520.5	4917.7	3429.0	20165.7
1967	6593.5	8586.5	3653.4	1571.6	20405.0	3299.4	8787.4	5049.7	3500.3	20636.8
1968	6565.5	8824.5	3749.3	1604.7	20744.0	3285.4	9031.0	5182.3	3574.0	21072.7

APPENDIX 3–3

ALTERNATIVE ESTIMATES OF THE CANADIAN PHYSICIAN STOCK

The total number of physicians in Canada at any point in time would appear to be a relatively concrete sort of concept, susceptible to straightforward measurement. In fact, however, there exists no single precise measure of the physician stock and the estimates which have been used in the literature vary greatly both in definition and in statistical accuracy. To give an idea of the range of such estimates, the Canadian Medical Directory for 1970 lists 30,825 registered physicians in that year, for a healthy ratio of about 146 physicians per 100,000 population.[1] At the other end of the spectrum, the Department of National Health and Welfare estimates on the basis of taxation statistics that in 1969 there were only 19,260 physicians in active fee practice, and if these were reduced by assuming that all those earning less than $15,000 per year net could not be full-time practitioners, the remainder is 15,595 or a sickly 74 per 100,000 population[2]—less than half the CMD estimate. Since the possible estimates vary so widely, any effort to establish "the" physician:population ratio for Canada is an exercise in futility. This dimension of futility is additional to the well-known meaninglessness of absolute physician:population ratios in the absence of data on population characteristics, geographic distribution, availability of health capital equipment, complementary and substitute personnel, and a whole host of other inputs to the (ill-specified) health production function.

Analysis of changes in the physician:population ratio over time may be meaningful, thus one can assert that within any province of Canada an increase in the ratio however measured over the past 10 to 20 years represents an increase in the supply of medical services because all other forms of medical services factors (capital equipment, nurses, technicians, etc.) have incresaed rapidly as well. On the demand side we know that demographic factors affecting medical need have not shifted significantly upwards, and may even have reduced need. But even with this knowledge we cannot be sure that changes in income, education, and insurance have not induced both shifts in and movements along the demand curve for medical care; so that the market *may* become tighter in spite of great increases in supply. (Whether such tightness has policy significance in the area of medical care, given the many peculiarities of the market, is another matter).

---

[1] Canadian Medical Association, *Canadian Medical Directory, 1970,* 16th Annual Edition, Toronto, Seccombe House, 1970.

[2] Canada, Department of National Health and Welfare, *Earnings of Physicians in Canada, 1959-1969,* Health Series No. 28, Ottawa, Oct. 1971.

If medical care is supplied free as a public good, and supply creates its own demand, why should "demand" determine the optimal level of provision? But this is an Appendix about the physician stock.[3]

The Canadian Medical Directory list of registered physicians is close to the upper limit of estimates of the physician stock. One could get a higher figure by summing provincial registries and double-counting all physicians registered in more than one province, but to my knowledge no one has yet tried *that* estimation procedure! Also, one might note that some persons trained or otherwise may be practicing medicine without registration, in anticipation either of being registered soon or of being arrested, but this is a fine point which is not likely to affect the numbers much. As an estimate of the total stock of suppliers of medical services in Canada, however, the CMD number is clearly much too high. It includes physicians who are outside the country, retired (or recently deceased) or engaged in academic, administrative, or research work. Moreover, it shares with other concepts the difficulty of sorting out those physicians who are really part-time workers either due to advanced age or to the early, building-up years of a practice.

At the next level of inclusiveness, the Canadian Census cleans out non-residents, non-practitioners, and the fully retired. It is still vulnerable to the part-time problem, so the census estimate of 21,260 member physicians in 1961 may still be somewhat of an overestimate. Moreover, the occupational data reported by the census is based on the one-in-three household sample, not on the full census, and thus is subject to random sampling error. On the other hand, the census data is available in very fine detail by geographic region and age-sex structure, so that it is often used for cross-sectional descriptions of medical supply at a point in time. (The 10-year interval between censuses makes time series work with such data rather meaningless in the short run). For this reason Fraser[4] reports census data to show the fine structure of the geographic distribution of Ontario physicians, while Judek[5] uses these data to observe the provincial distribution of physicians by decade from 1911 to 1961. One must recall that all such studies may overstate the availability of medical services by an amount which may or may not be proportionate by region and time-period. The information on time-period consistency will become available with the 1971 Census, when 1961–71 growth in census data can be compared with other series maintained during this decade. A rough test of cross-sectional consistency is described below.

---

[3] If changes in observed physician:population ratios have limited usefulness, discussion of the absolute level have none at all. The approach adopted by the Royal Commission on Health Services Report, 1964, (Vol. I, Ch. 13) in discerning future "shortages" of personnel is an unhappy example. First one chooses an arbitrary standard on the basis of present experience, then one projects future population and physician stock. The base level is termed a "shortage" situation, for no obvious reason, and so increases are termed "improvements," but the definition of the ratio at any point in time is not unique, its optimum level in the absence of data on other inputs is an empty concept, and to compound the misery the population forecasts were gross overestimates and the physician increment estimates were too low. Unfortunately Hall Commission estimates are still occasionally referred to as a basis for future health planning.

[4] R. D. Fraser, *Selected Economic Aspects of Health Care in Ontario*, Study prepared for the Ontario Committee on the Healing Arts, Toronto, Queen's Printer, Ontario, 1970, p. 430.

[5] S. Judek, *Medical Manpower in Canada*, study prepared for the Royal Commission on Health Services, Ottawa, Queen's Printer, 1964, p. 277.

Lists of "active" physicians are maintained by the Research Department of Seccombe House, a private publishing house in Toronto which provides data for drug companies and other medical suppliers. Their publication, *The Canadian Medical Market 1969*, gives two alternative series on physicians running from 1959 to 1969, a broad definition which includes all physicians engaged in practicing medicine and judged for purposes of a seller of medical supplies to be active, and a narrow series which excludes from this total interns, residents and military physicians. The broad definition of active physicians probably comes closest to the theoretically correct measure of physician availability in determining the supply of medical services. For the purposes of comparison the Seccombe House broad and narrow definitions yield 20,981 and 18,507 physicians in 1961, to compare with the census 21,260. As can be seen, the census data is very little different from the Seccombe House broad definition, about 1.5 per cent, and this difference may be partly due to differences in timing of the count within the year. The Seccombe House narrow definition, excluding interns, residents and military physicians, seems to be similar to the definition used by the College of General Practice of Canada and the Royal College of Physicians and Surgeons of Canada; Judek[6] quotes their submissions to the Royal Commission on Health Services as giving a total of 18,058 physicians and surgeons in mid-1961. This gives a breakdown by province and by GP/specialist but one which is on a different conceptual basis from the census and is thus about 13 per cent lower. The Seccombe House definitions for 1969 yield 26,158 and 22,309, a substantial markdown from the 30,825 (1970) of the Canadian Medical Directory. The published data from Seccombe House give a detailed breakdown of their narrow definition by specialty Canada-wide, and by county and census division and by medical market in the categories GP and specialist, for the year 1969, while earlier publications provide slightly less detail for 1965 and 1961.[7]

A still narrower definition of physicians is used in the Department of National Health and Welfare Care Series Publication No. 28, *Earnings of Physicians in Canada, 1959-1969*, (Ottawa, Oct. 1971), which focusses only on practitioners "whose main employment is in the provision of personal medical care services and whose professional income is mainly in the form of fees for services rendered." (Foreword). This excludes all physicians on salary or other form of remuneration, many of whom are clearly providing medical services on a part or full-time basis. It is thus an underestimate of medical service suppliers, although the NHW definition is not strictly a subset of the broader definitions above because it includes some semi-retired physicians. Nevertheless, it is clearly a subset as the NHW definition yields 14,784 physicians in 1961 and 19,260 in 1969.[8] The problem of part-timers is adjusted for by preparing a narrow series which excludes as part-timers all those with incomes below $15,000 annually; this reduces the numbers to 7,643 in 1961 and 14,475 in 1969. These numbers illustrate the inadequacy of such an adjustment for time series analysis. The arbitrary income level would have to be shifted each year and the only basis for such a shift would be prior information about part-timers which would render such a crude adjustment unnecessary.

---

[6] Judek, *op. cit.*, p. 159.

[7] *The Canadian Medical Market, 1969; The Canadian Medical Market by Counties, 1965*, and *The Canadian Medical Market by Counties, 1961*, are all published by Seccombe House, Research Department, 443 Mount Pleasant Road, Toronto 298, Canada.

The Department of National Health and Welfare also prepared estimates of the number of active civilian physicians on the basis of a mail questionnaire survey.[9] It seems odd that military physicians in Canada are excluded, since military personnel form part of the population base to whom medical services are supplied (and are included when physician:population ratios are computed). Those counts seem to correspond quite closely to the Seccombe House broad definition; in the years of overlap (1959, 1962, 1965) the estimates are NHW 19,300; 21,011; 22,649; SHB 19,844; 21,434; 22,623. Apparently this survey has been discontinued as duplicative of (and somewhat weaker than) the Seccombe House series.

Schematically, we may represent the different conceptual definitions of the physician stock available in published sources by Table A.3–1, ordered by decreasing generality.

Table A.3–1 applies to published sources only; the National Health and Welfare data of categories IV and V are based on taxation statistics, which permit any desired degree of detail in breakdown by location, age, sex, specialty, and income class—but which are not publicly available. Seccombe House data is similarly said to be available by detailed location, specialty, and age.[10]

In Table A.3–2 we present a comparison of estimates of the total physician stock by provinces from various data sources to indicate the effect of using different concepts and definitions.

Table A.3–2 suggests that the distribution by provinces is very similar for census and Seccombe House (narrow) data—if the broad data are equivalent to census then exclusion of interns, residents and military physicians does not appear to alter the interprovincial distribution of medical services very much. The focus on fee-for-service practice, however, changes the distribution significantly as it reduces sharply apparent relative availability in Newfoundland, Manitoba and Quebec and increases it in British Columbia. This would imply that fee-for-service practice, while dominant throughout Canada, is relatively more important on the west coast and less so on the east. A cross-sectional study of physician availability based on fee-for-service practitioners would thus give results different from one based on all active practitioners; moreover, it would tend to indicate a greater regional disparity in availability since British Columbia and Ontario, the provinces with above average physician-population ratios, are also those provinces with the largest proportion of physicians mainly on fee-for-service remuneration. Where physicians are scarce overall, we observe relative shifts away from fee-for-service practice; but there is not necessarily a causal

---

[8] This is apparently the concept used in the NHW *Task Force Reports on the Costs of Health Services in Canada*, (1970) Vol. III, p. 320, Table 32, as they report 18,314 physicians in fee-for-service practice in 1968. The difference from 18,244 may be only timing.

[9] Canada, Department of National Health and Welfare, "*The Economics and Costs of Health Care*," Research and Statistics Memo, Ottawa, May 1967, p. 22.

[10] *The Canadian Medical Market, 1969, op. cit.*, p. 29.

TABLE A.3-1

Definition	Source	Data Available
I		
All Physicians registered in Canada	Canadian Medical Directory	Annually by province and specialty.
II		
Active Medical Practitioners, exclusive of academic, research, administrative, and non-resident physicians.	Census	Decennially by age, sex and detailed geographic location.
	Seccombe House Broad Definition	Annually by total for Canada.
	National Health and Welfare Active Civilian Physicians	Occasionally by province.
III		
Active Practitioners, exclusive of interns, residents, and military physicians.	Seecombe House Narrow Definition	Annually by total for Canada and by general practitioner/specialist division. Occasionally by specialty Canada-wide and by major specialty in major markets (Metropolitan areas) as well as by county and census division with general practitioner/specialist division.
IV		
Physicians in fee-for-service practice.	National Health and Welfare Active Fee Practice Physicians.	Annually by Province.
V		
Physicians in fee-for-service practice adjusted for part-time practitioners.	National Health and Welfare Active Fee Practice Physicians with net earnings greater than $10,000, 1957-66, or greater than $15,000, 1957-69 (Different publications).	Annually by province.

connection since British Columbia and Ontario were also the provinces with highest income per capita in 1961. High income regions tend to attract more physicians[11] and high income individuals may be displaying a preference for fee-for-service practice.

---

[11] This has been observed in several U.S. studies of physician location; see H. B. Steele and G. V. Rimlinger, "Income Opportunities and Physician Location Trends in the United States", *Western Economic Journal*, III, Spring, 1965; L. Benham, A. Maurizi and M. Reder, "Migration, Location and Remuneration of Medical Personnel; Physicians and Dentists", *Review of Economics and Statistics*, 50, (3) August, 1968; and F. A. Sloan, *Economic Models of Physician Supply*, unpublished Ph.d. dissertation, Harvard University, Cambridge, Mass., 1968.

TABLE A.3-2

Physicians by Province, 1961, Various Data Sources, 1961

	Seccombe House (Narrow Definition)		Census [Judek (p. 277)]		National Health & Welfare ("Mainly" fee-for-service)		Colleges of GPs and Specialists [Judek (p. 159)]	
Province	Number	Percentage of Total	Number	Percentage of Total	Number	Percentage of Total	Number	Percentage of Total
British Columbia	2,031	11.0	2,150	10.1	1,683	11.3	1,656	9.8
Alberta	1.243	6.7	1,356	6.4	979	6.6	1,345	7.5
Saskatchewan	845	4.6	951	4.5	674	4.5	764	4.2
Manitoba	925	5.0	1,120	5.3	720	4.9	880	4.9
Ontario	7,013	37.9	8,040	37.8	5,677	38.2	7,047	39.0
Quebec	5,026	27.1	6,167	29.0	4,050	27.3	4,949	27.4
New Brunswick	431	2.3	455	2.1	352	2.4	430	2.4
Nova Scotia	657	3.6	706	3.3	528	3.6	638	3.5
Prince Edward Island	91	0.5	91	0.4	68	0.5	82	0.5
Newfoundland	240	1.3	230	1.1	127	0.9	250	1.4
Canada	18,520	100%	21,266	100%	14,858	100%	18,058	100%
			(ex. NWT & Yukon)		*(ex. NWT & Yukon)*			

SOURCES: *The Canadian Medical Market 1969* Toronto, Seccombe House, 1969; S. Judek, *Medical Manpower in Canada* (A Study for the Royal Commission on Health Services) Ottawa, Queen's Printer, 1964; Canada, Department of National Health and Welfare, *Earnings of Physicians in Canada, 1958–68*, Health Care Series, No. 25, Ottawa, June, 1970.

The only set of proportions which seem somewhat peculiar are those in the submissions to the Royal Commission on Health Services reported by Judek (1964) and used by him to calculate provincial physician: population ratios by province for GPs and specialists. The total seems roughly comparable to the Seccombe narrow definition; but some individual levels are substantially out of line, particularly British Columbia and Alberta. Some additional evidence for British Columbia is given by Anderson and Clough[12] who report 2,044 physicians in 1960, "not in retirement, serving in a professional capacity" on the basis of British Columbia Medical Association data. This tends to confirm the Seccombe narrow figure, since Anderson and Clough exclude residents and interns.[13]

In Table A.3–2 we present totals for Canada over time, again drawn from various sources, with the changes in each shown in Figure A.3–1. Table A.3–3 makes quite clear the weakness of the National Health and Welfare "active" definition of fee practice physicians as a time series measurement. The increase of 213 per cent tells us far more about the behavior of physicians' incomes than it does about the growth of the physician stock. The other three definitions, however, point to steady growth over the periods recorded with a slight slow-down about 1963 (just when the Hall Commission was about to report!) and slow acceleration since. On any definition, however, the stock of physicians has grown substantially faster than the population over this period. As the rate of population growth has slowed down, that of the physician stock has accelerated.[14]

What then is the "correct" definition? There is no single correct value. If we wish to know how much medical care is available, the census or Seccombe House broad definition is clearly preferable. If one *had* to have a single figure for the Canadian physician stock, this is it. But its year-to-year shifts are rather peculiar, and suggest that it may be very sensitive to the timing of Seccombe House's writing and up-dating. If one is interested in the economic behavior of physicians, the fee practice definition is superior both because all the public

---

[12] D. O. Anderson and A. F. Clough, "The Location of British Columbia Physicians," *British Columbia Medical Journal*, 2 (9) September, 1960.

[13] Also peculiar is the fact that Judek (*op. cit.*) cites Anderson and Clough (*Ibid* p. 158, footnote 1) as a source for a reference to a WHO "standard" of 66.6 general practitioners per 100,000 population, which he then contrasts with 48.7 per 100,000 using his data. Yet he appears to overlook the calculation of 73.9 by Anderson and Clough in the article to which he refers. This very large discrepancy, bracketing the WHO standard, is not explained, nor is the discrepancy of roughly 15 per cent between his total physicians on p. 159 and the total reported from the 1961 Canadian Census on p. 156, or the more serious conceptual problem of a "standard" for GPs which is independent of the availability of specialists. Anderson and Clough place 665 of 864 B.C. specialists in the "practicing" category as being direct providers of medical services to the public (and hence direct substitutes for GPs). But it is clear that other specialists substitute for direct medical care suppliers more or less indirectly (e.g. diagnostic radiologists and pathologists save GP time on diagnosis). To regard the volume of such services supplied as independent of the supply of medical services, and to measure the latter by GPs alone (Judek, *op. cit.* p. 158) is to assume that these specialists are doing nothing at all!

[14] It may be of interest that Canada's rate of natural increase is of the order of 200,000 people per year, compared with immigration of about 150,000. It is therefore entirely appropriate that the flow of immigrant physicians should be about three quarters the rate of production of our medical schools. "Self-sufficiency" would make sense only if we had no immigration of non-physicians either, and a corresponding population growth rate of less than one per cent. To argue that we need more home produced medical students "because we cannot rely on continued physician immigration" and then to forecast our overall needs using population estimates with a large immigrant component is a strange procedure to say the least.

TABLE A.3-3

Number of Physicians in Canada

Year	Seccombe-B		Seccombe-N		NHW-FP		NHW-FP15+	
1957					12,957		4,625	
1958			16,252		13,514	4.3%	5,408	16.9%
1959	19,844		17,338	6.7%	14,082	4.2%	5,998	10.9%
1960	20,202	1.8%	17,922	3.4%	14,479	2.8%	6,858	14.3%
1961	20,981	3.9%	18,507	3.3%	14,874	2.7%	7,643	11.4%
1962	21,434	2.2%	18,820	1.7%	15,275	2.7%	8,231	7,7%
1963	21,648	1.0%	19,040	1.2%	15,650	2.5%	9,195	11.7%
1964	22,125	2.2%	19,364	1.7%	16,050	2.6%	10,257	11.5%
1965	22,623	2.3%	19,644	1.4%	16,460	2.6%	11,330	10.5%
1966	23,183	2.5%	20,417	3.9%	17,040	3.5%	12,050	6.4%
1967	24,494	5.7%	20,941	2.6%	17,585	3.2%	13,482	11.9%
1968	25,069	2.3%	21,513	2.7%	18,244	3.7%	14,475	7.4%
1969	26,158	4.3%	22,309	3.7%	19,260	5.6%	15,595	7.5%
57–69						48.6%		237.2%
59–69		31.8%		28.7%		38.2%		160.0%

% Population Increase 1957–69: 26.8
1959–69: 20.5

SOURCE: *The Canadian Medical Market 1969*, Toronto, Seccombe House, 1969; S. Judek, *Medical Manpower in Canada*, A Study for the Royal Commission on Health Services, Ottawa, Queen's Printer, 1964; Canada, Department of National Health and Welfare, *Earnings of Physicians in Canada*, 1959–1969, Health Care Series No 28, Ottawa, Oct., 1971.

Figure A.3–1

Percentage Change in Population and Physician Stock
by Various Definitions, 1959–1969.

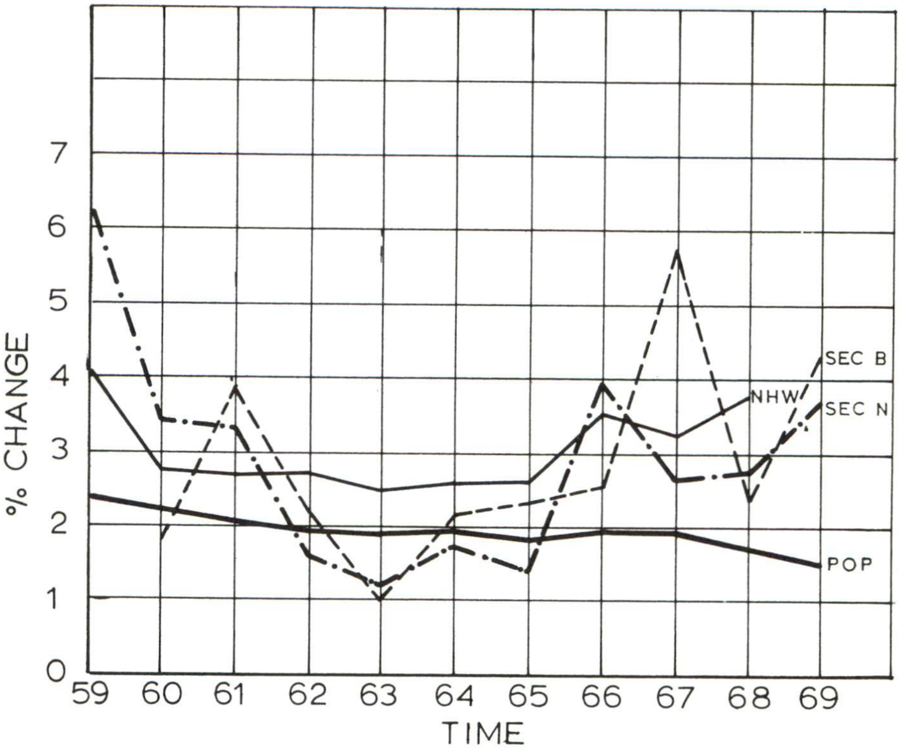

data on physician incomes and medical payments per capita are based on this subgroup; and because the behavior of the other classes of physicians will not be sensitive to the same sorts of economic considerations. The "price" of medical services is not directly influenced by or relevant to the salaried physician. Thus in specifying a model of the medical market we have focussed on fee practice physicians, but we should not be deceived into thinking that their numbers represent the availability of medical care in an absolute sense. The example of Newfoundland is an extreme case, showing how badly one could mis-state the availability of medical care by reference to the fee practice physicians only, but there are substitutes for such practitioners, in and out of the medical profession, in all provinces. If one is genuinely interested in the availability of medical care these substitutes cannot be ignored.

chapter four

PRICE CHANGES WITHIN FEE SCHEDULES

The analysis of medical prices thus far has been carried out in terms of "the" price of medical services, an overall average level. This is, of course, the relevant variable to consider in examining the behavior of the medical market as a whole and the issues it raises for public policies towards inflation. Nevertheless, much discussion of medical prices focusses not on average levels but on the internal structure of fee schedules and the relative value of different sorts of procedures.[1] It is worth examining this internal problem for two reasons: first, because the behavior of fee schedule components may shed some light on the processes of price formation which we have studied above; and, secondly, because the behavior of the overall price level may be sensitive to shifts in relative frequencies of different types of medical services if some procedures can be substituted for others.

The first sort of information gain will arise if we can apply *a priori* information about shifts in supply and demand for specific types of care to our observations on relative prices for certain service types within the overall total of health services. The second type of effect requires that physicians can substitute, e.g., home calls for office calls for hospital calls in treating a particular patient, and then argues that physicians make such substitutions to increase their net return per unit of time. If prices for these different services rise at different rates, we may find switching back and forth from one form of service to another which will invalidate price increase measurements based on fixed weights. If we observe increases in rates of output for those medical services whose prices have risen most rapidly, we are left with two possible interpretations. Either we are watching a conventional model in operation with shifts in demand moving prices up a fixed supply curve, (in this case quantity should move before or simultaneously with price) or we are observing exogenous price increases leading to adjustments along a rising supply curve (for particular classes of medical service) and "demand" is increased because suppliers wish to produce more at the new higher price. The evidence of the last chapter suggests that the creation of new demand is not totally effective in the aggregate, however, as there are also constraints on the choice of supply patterns imposed by the "real" state of the patient population served.

---

[1] This is the concern of Section 7 of the NHW *Task Force Report on the Costs of Health Services in Canada*, Ottawa, Queen's Printer, 1969. It runs through much of the discussion of relative incomes and physician distribution by specialty in other sections.

The analysis of the behavior of relative prices is made more complex by the problem that the physician response is expected to be in terms of net return per unit time from a given procedure while the observed relationships (and inflationary implications, if any), stem from gross payments per procedure. Thus a sharp drop in physician time input per procedure, as for say laboratory tests or surgical cases, associated with a great increase in the use of other medical inputs, may lead to a rapid increase in physician net returns from a slowly rising or even constant price.

The demand for obstetrical services provides scope for the application of *a priori* information. We know that total births in Canada were at 469,093 in 1957, rose to 479,278 in 1959, then fell steadily to 369,348 in 1969. This represents a massive exogenous downward shift in demand for services uninfluenced by supplier behavior or price of services. Of course rising incomes, tastes, and education may have tended to shift demand from general practitioners to obstetrical specialists, but the overall market clearly shrank. On the supply side we may distinguish physicians according to their degree of specialization in this market and show how the numbers of each available changed from 1961 to 1969. (1957 data are not available, but are probably lower overall than 1961 as the total number of physicians was substantially lower and the great "obstetrical contraction" had only just begun by 1961.)

Physician Category	1961	1969
Certified Specialist—obstetrics	72	79
Non-certified Specialist—obstetrics	—	13
Certified Specialist—Ob-Gyn	616	822
Non-certified Specialist—Ob-Gyn	307	76
Non-specialized practitioners	7,956	8,560
Subtotal—specialized practitioners	995	990
Total	8,951	9,550

SOURCES: S. Judek, *Medical Manpower in Canada*, Ottawa, Queen's Printer, 1964, pp. 166-167, and *The Canadian Medical Market 1969*, Toronto, Seccombe House, 1969.

These data indicate that there has been considerable response to the falling market. Non-certified specialized practitioners in this field have dropped off very sharply, and while such specialization has tended to decrease (from 2,941 physicians in 1961 to 2,397 in 1969) presumably in the face of increasing numbers of specialists, the drop in the obstetrics field has been far more drastic. We do not know, of course, whether the non-certified specialists went back to being GPs or whether they achieved certification—the sharp rise in certified specialists suggests the latter possibility.

Although this suggests that there has been some supply responsiveness, it is clear that overall the supply of specialized obstetrical services has remained almost static. In the face of the sharp drop in demand, this would imply according to conventional economic theory a drop in price (or at least a price rising less rapidly than for medical services generally). On the other hand the income-oriented pricing model would lead us to expect still more rapid prices in the obstetrical sector as practitioners seek to maintain their relative incomes in the face of falling workloads. Both of these effects could be washed out, however, by a combination of increased relative demand for specialized services (e.g. more use of obstetricians per thousand births,) and withdrawal from the market of non-specialized GPs. This would imply that the excess supply, rather than being focussed on this market, in fact is spread throughout the overall medical service market and becomes diluted and confused by all sorts of other forces at work there.

If we look at the CPI physicians' fees component, which includes home calls, office calls, a "standard" confinement attended by GP, and an appendectomy, we find that from 1957 (annual average) to January of 1968 the medical index rose by 41.6 per cent while the fee for attending a standard confinement rose 51.5 per cent.[2]

These numbers are consistent with income oriented pricing, the price of obstetrical services rising faster as demand drops. But the picture is not that clear. We do not know the ratio of actual to list prices for obstetrical care or for medical services generally, so we cannot be sure that the relative behavior of actual prices followed this pattern. Nor can we be sure that the relative payment per unit of physician time for obstetrical care moved in the same way as the reported price. And finally the quoted "average" is absurdly low due to the behavior of the appendectomy component. The other two components, home and office calls, both rose by about the same order of magnitude (49.9 per cent and 52.5 per cent respectively) as did confinement prices, while the appendectomy list price rose only 7.8 per cent over the period. Thus the apparent conformity of the CPI obstetrical component to the behavior implied by income pricing is probably explainable on other grounds.

Other data tend to be equally inconclusive. Table XVIII reports data on fee schedule components provided by the Department of National Health and Welfare which shows no particular tendency. If anything the cost of a confinement attended by a GP has tended to rise more slowly than that of an office visit and perhaps has tended to rise faster than a home visit charge. There appears a weak tendency for confinement prices of GPs to rise faster than those of specialists, but this could also be explained if actual to list rates had risen faster for the latter. NHW has also examined the Ontario fee schedule from 1950 to 1969 and from 1962 to 1967 (using different weighting patterns) and find that over the first period list prices (all services) rose 102.6 per cent while obstetrical prices rose 165.6 per cent. As between GPs and specialists, the rise was 150 per cent and 230 per cent. In the shorter period (with demand falling) the obstetrical index rose 116.2 per cent against an all-items rise of 119.8 per cent. The rapid rise in prices over the long period is during a sharp rise in demand (and pronounced tightening of the market) followed by an equally large drop. (Births were 372,009 in 1950, 369,648 in 1969, so the initial rise was more than cancelled out). Thus these fragments of data would be consistent with a demand-fuelled price increase in the 1950s followed by no corresponding relative price decrease in the 1960s—a classic sticky-price oligopoly model.[3]

---

[2] Canada, Department of National Health and Welfare, Research and Statistics Memo, "Health Care Price Movements", Ottawa, April 1968.

TABLE XVIII

% Change in Fee Schedule, Early 1960s* to 1970, by Province, Selected Items

	Visits			Confinement		
	Office-GP	Office-Spec	Home	GP	OB	Laboratory**
Newfoundland................	33.3	33.3	16.7	17.6	12.0	0
Prince Edward Island......	66.7	66.7	100.00	n.a.	n.a.	100.0
Nova Scotia......................	50.3	33.3	66.7	n.a.	20.0	n.a.
New Brunswick...............	200.0	100.0	42.9	33.3	50.0	100.0
Quebec.............................	n.a.	n.a.	n.a.	n.a.	n.a.	n.a.
Ontario............................	50.0	25.0	33.3	47.1	32.0	—
Manitoba.........................	90.5	63.3	78.6	n.a.	42.9	n.a.
Saskatchewan.................	50.0	50.0	20.0	56.3	50.0	0
Alberta............................	100.0	33.3	71.4	48.0	48.0	10.0
British Columbia...........	50.0	50.0	20.0	56.3	50.0	—

* Initial years differ, distributed from 1959 to 1963, so data are not comparable across provinces.
** Includes urinalysis, haemoglobin, W.B.C. and sedimentation.

SOURCE: Department of National Health and Welfare, Research and Statistics Directorate.

---

[3] In this context, Milton Moore has suggested that since price schedules are set by the representatives of the whole provincial medical association, income aspirations of particular specialties might well be swamped in the determination of the overall schedule. Still another possibility is that rapid rises in obstetrical prices during the 1950s combined with the baby boom have led to earnings of obstetricians being out of line in the early 1960s. In this case the fact that obstetrical prices are now rising at the same rate as medical prices generally would reflect a restoration of the former relative income structure. This could only be checked, however, with time series data on average earnings by specialty.

In Table XIX we report price indexes based on actual amounts paid to physicians, per service, by the private insurance plans associated in Trans-Canada Medical Plans. A number of plans could not be included in these indexes due to shifts in coverage and definition, the reported indexes are based on M.S.A. (British Columbia); M.S. (A)I (Alberta); M.M.S. (Manitoba); P.S.I., W.M.S. (Ontario); and M.M.C. and M.H.S.A. (Maritimes). The medical care section covers office, home, hospital visits, and surgical covers about a dozen specific procedures reported in TCMP annual reports. "Other services" is dominated by diagnostic and therapeutic X-ray.[4]

TABLE XIX

Price Indexes for Medical Services Paid For by Private Insurance Plans by Care Section

	Laspeyres'		Paasche	
	(1957 = 100)			
	1961	1967	1961	1967
Medical Care* Section	117.5	158.4	119.2	163.0
Surgical Care** Section	109.1	129.1	107.8	132.8
Obstetrical Care Section	117.1	146.1	118.5	147.4
Other Services Section	119.5	144.7	116.3	139.1

SOURCE: Annual Reports of Trans-Canada Medical Plans, 1957, 1961, 1967.
* Medical care section calculated excluding data for Maritimes in 1961.
** Surgical care section calculated excluding data for Maritimes.

The data in Table XIX differ somewhat from the behavior of the CPI components, indicating a less rapid increase in obstetrical prices and a more rapid increase in home and office (medical care) visit prices. Also they suggest a tendency for Paasche indexes to over-run Laspeyres', except in the other services section where technological change is particularly important. This suggests that movement takes place along supply curves within specific service bundles, that within the category "medical care" the volume supplied of different kinds of visits varies positively with their prices and hence $P > L$. One would expect such substitution of higher for lower price services to be less prominent in surgical procedures; in this case "substitution" consists not of applying one procedure rather than another in the same case, but in changing one's criteria for operate/not operate in different cases.

Apart from the interesting discrepancy between Paasche and Laspeyres' indexes the Table XIX data show no direct confirmation of the hypothesis that obstetrical prices have risen relatively faster as demand has dropped. In fact, if we think of an obstetrical case as a combination of medical services (pre and post-natal visits) and surgical services (the delivery and hospital care); and we argue that shifts along the production function (increases in hospital equipment and personnel used per case, hence greater output per physician) have probably been greater in the production of surgical care, then we would expect to find surgical prices rising less fast than medical, with obstetrical in the middle. And we do. Such an argument has a strong aroma of rationalization about it, however, and it seems more honest to say that on the basis of the obstetrical price data which we have examined there is no evidence one way or the other on the question of shortage versus income pricing.

---

[4] Further details of construction are provided in Appendix 3-1.

At the opposite end of the spectrum from obstetrical care is the demand for laboratory services. This demand is wholly physician-generated, in the sense that a patient cannot order his own tests although he may if informed (or misinformed) urge that certain tests be done. The patient may initiate a physician-patient contact (initial office or home visit), but the laboratory demand generated by this contact is at the physician's discretion. As is well known, the increase in demand for such services has been spectacular over the past decade. Total services per capita data are not available, but the private insurance plans show per capita services doubling or tripling over the period while public hospital plans show similar spectacular increase. It has been argued by the Task Forces on Health Costs that much of this new utilization is unjustified on medical need criteria, but from our point of view the interesting question is what has happened to price in response to this spectacular demand increase. The answer is that such prices have been almost static, as is indicated in Table XVIII. The two cases of 100 per cent increase involve a jump from $1.00 to $2.00 of the standard test fee. The Ontario fee schedule data show no change in laboratory fee schedules from 1962 to 1967, and a change of only 55.2 per cent from 1950 to 1969 compared with an increase of 102.6 per cent for all services. These results are entirely consistent with the income-oriented pricing model; that as volume and hence incomes go up, pressure on prices is reduced. If production patterns had not shifted, this would be conclusive evidence for the income model. (In terms of chapter two, equation (14), a negative response of P to q_0 requires relatively large negative p_1 or small positive p_2). Unfortunately (for our purposes) there has also been great technical progress in laboratory procedures during this period and the physician's net return per unit of time is up sharply. This makes the observed quantity up, price flat behavior consistent with either income or shortage pricing. One could argue that rapid productivity increases made possible rapid income increases without the necessity of raising prices; one could also argue that a conventional supply and demand apparatus applies and that both supply and demand curves moved rightward to hold prices level. It is, of course, a little difficult to rationalize a price-sensitive demand curve for services which are ordered by the physician, not the patient, but one may postulate that the physician acts as economic agent for the patient. I find the supply/demand explanation implausible, but existing data do not rule it out. The TCMP data in Table XIX do not bear on this question, since reimbursement for laboratory charges tended to be sporadic and irregular across plans. The result is that the "other services" index shown in Table XIX has to exclude laboratory services.

Between these two polar cases lies the large block of medical services supplied as simply office or home visits, initial or recall. Table XVIII clearly indicates a trend in recent years for office visit prices to rise faster than home visit prices, disregarding an office visit for complete examination by internal medicine specialist. The CPI component shows office and home visits rising 52.5 per cent and 49.9 per cent respectively, 1957 to 1968.[5] But if home calls take much more physician time than office calls[6] and the opportunity cost of physicians' time has been rising steadily, we would expect substitution away from house calls by physicians. That this is happening is shown by the TCMP data as reported in Table XX; the focus on initial house and office calls is intended to minimize physician influence on the overall level of new demand. We assume that the physician can distribute new patient contact as between home and office calls, but that the total number of new contacts is exogenous (disregarding queuing costs or simple refusal to serve). This is not possible for all TCMP plans, as some reported initial and subsequent totals are consolidated.

TABLE XX

Distribution of Practitioner Visits Between Home and Office,
For Subscribers to Private Insurance Plans
1957 and 1967
Initial Visits Per 1,000 Persons

	1957			1967			
Plan	Home	Office	% Home	Home	Office	% Home	% Increase in Total
MSA	176.39	1009.78	14.9	87.18	1275.16	6.4	14.9
MS(A)I	119.62	998.14	10.7	51.48	1376.40	3.6	27.7
MMS	351.00*	1329.72	20.9	147.96*	1628.16	8.3	5.7
PSI	618.84*	2350.32**	20.8	234.72*	2813.28**	7.7	2.7
WMS	466.68***	2301.72**	16.9	204.36***	2969.04**	6.4	14.6
MMC	1097.27***	868.74	55.8	426.82***	1587.38	26.9	2.5

* All day home calls; initial, subsequent, and additional family member.
** Initial and subsequent office calls.
*** Initial and subsequent home calls.
SOURCE: Trans-Canada Medical Plans, Annual Reports, 1957 and 1967.

What emerges clearly from Table XX is that total growth in initial physician-patient contacts was not spectacular for the insured population from 1957 to 1967, except in Alberta. In other regions such contacts grew more slowly than the physician:population ratio, which suggests that either initial physician-patient contacts expanded faster among the uninsured (or those becoming insured) or else that physician workload expanded faster in those physician-patient contacts which were physician-induced. Either is plausible, and we cannot tell since we have no data on the uninsured. However, within the insured, the proportion of initial visits made as house calls dropped drastically. This is no new finding, and is predicted by the conventional supply and demand model, among others. What is important is that this shift took place with *no* significant corresponding change in relative prices, at least according to our very sketchy data. The supply-demand model would argue that as the implicit price of physician time rose from 1957 to 1967, physicians reacted by curtailing their offerings of home visits and driving up their relative prices. The result is that patients, faced with the higher relative prices of house calls, shift to office visits. The crucial link in this chain is the shift in relative prices. But apparently this is not what happened. The price of physician time rose, house calls shrank, but relative prices stayed about constant. We can only conclude that what we observe is demand manipulation by suppliers which increases their net incomes (if net returns per unit time to physicians are larger for office than for home calls) rather than a conventional market response through relative price change.[7]

---

[5] Note 2 above.

[6] U. Reinhardt estimates an average of 17.8 minutes for an initial office visit, 11.2 for a follow up, 27.7 for a one-person house call, using U.S. data. U. Reinhardt, *An Econonic Analysis of Physicians' Practices*, unpub. Ph.D. dissertation, Princeton University, 1970.

Turning to another primarily physician-generated activity, we can observe the behavior of consultation rates in the various provincial plans. In Table XXI we present the annual rates of consultations by plan and year per thousand subscribers. The data include consultations with and without associated procedures, since this distinction is not made consistently from plan to plan or year to year. The rates of increase in consultations per head have been dramatic over this 10-year period, whereas initial physician/patient contacts rose between 2.5 per cent and 27.7 per cent, the lowest rate of consultation increase is 107.1 per cent and two are at 160 per cent or above. This is consistent with (but as usual does not prove!) the suggestion that rising physician: population ratios lead to surpluses which are reflected in increases in consultation rates as a form of physician-generated "demand" for services. Moreover the rates of consultations are roughly consistant with this view across provinces, with the highest rates of consultation in the high physician density provinces, Ontario and B.C. The correspondence is not, of course, precise.

TABLE XXI

Consultations per Thousand Insured Population, with and without Associated Procedures, by Plan and Year

	1957	1961	1967	% Increase
MSA	72.36	89.70	157.16	117.2
MS(A)I	45.66	69.82	118.68	159.9
MMS	39.12	49.08	93.00	137.7
PSI	93.00	130.64	192.60	107.1
WMS	68.04	115.24	182.28	167.9
MMC	53.09	68.76	112.94	112.7

---

[7] It might be objected that there is a rather large hole in this argument—the utilization data are for an insured population for whom the marginal cost of a visit is zero so of course prices do not operate to clear the market. In reply, we note that the CPI and fee schedule prices refer to the whole market, the constancy of relative prices does not refer to the insured alone. As for utilization, the argument stands unless it is asserted that the ratio of home visits to office calls has *not* fallen for the uninsured! This I doubt.

The average price paid for each consultation by plan and year is presented in Table XXII, along with the proportion of total plan expenditure paid for consultations. As can be seen, the proportion of plan expense more than doubled in all plans but P.S.I. in Ontario, where it was initially relatively high. Prices paid also rose sharply, a comparison with Table XVII in chapter three indicates that in each region studied, the average price received for consultations rose faster than the average price of all medical services, whether the latter is measured by a Laspeyres or a Paasche Index. Thus relatively high rates of increase of consultations have been associated with relatively high rates of price increase. This clearly cannot be interpreted as movement along a demand curve; it is consistent with movement along a supply curve of consultants' services due to shifts in a demand curve. The latter explanation, however, is difficult to sustain since consultations are ordered by physicians, not patients, and since the data have been generated with respect to an insured population.

TABLE XXII

Amounts Paid to Member Physicians, per Consultation, and Costs of Consultations per Enrolee as Proportion of Total by Plan and Year

	1957	1961	1967	% Increase
MSA	$12.93	$14.23	$18.54	43.4
	3.9%	4.2%	8.2%	110.3
MS(A)I	$ 8.23	$12.19	$15.79	91.9
	2.1%	3.3%	4.7%	123.8
MMS	$ 9.01	$10.17	$13.97	55.0
	1.5%	1.7%	3.3%	120.0
PSI	$11.76	$14.47	$18.77	59.6
	4.9%	6.8%	8.1%	65.3
WMS	$ 8.07	$11.34	$17.53	117.2
	2.6%	5.0%	7.9%	203.8
MMC	$11.64	$16.35	$17.47	50.1
	3.2%	5.0%	7.1%	121.9

Of the four service items studied, two have been identified as predominantly patient generated (obstetrical services and initial home or office calls), and two as physician generated (laboratory tests and consultations). The former two have displayed decreasing and slowly increasing volume *per capita*; the latter two have jumped dramatically from 1957 to 1967 *for TCMP subscribers*. We simply do not know about the whole population. The behavior of the service mix, in response to a rising physician: population ratio, is thus consistent with physician-generated utilization increases and does not support a view of excess utilization by insured patients. The implications of this data for pricing behavior, however, turn out to be rather thin. No evidence of price movements in response to excess supply or demand could be found; on the other hand price responses to volume shifts (and implied income effects) did not turn up either. This last finding may not be surprising; the income-oriented pricing hypothesis does not imply that prices are set to maintain income flows from any one class of service or of patients. Thus a study of a handful of services for a small and perhaps atypical population slice should be considered satisfactory if it turns up evidence of discretionary price and quantity-setting behavior. This we have found. If direct appeal to the data supports neither demand and supply nor income maintenance pricing, but does indicate supplier discretionary behavior, that constitutes net support for the model of chapter two. It still does not tell us, however, what determines the exercise of that discretion.

Before leaving the topic of internal fee schedule structure, we may note several possible forms of adjustment which do not appear to have been very important in the past but may become so in the future. First of all, differential rates of price increase for different subsets of medical services may tend to bias price indexes based on year-to-year linking. This can work through a see-saw effect. Suppose fee schedules are always revised so as to give relatively large increases to certain types of procedures which have small weights in terms of their frequency per capita. (Larger increases to encourage greater supply?) If such increases lead to a shift in physician behavior so that more of these procedures are done, and less of others, the total increase in expenditure will be greater than the measured increase in fees (using pre-increase weights). At the next fee increase, suppose the pattern of increases is reversed and larger price increases go to the procedures which were left behind initially. Physicians then respond by shifting back to the more favored procedures. What is happening is that the "true" weights for each fee schedule item fluctuate, and each item is being given its greatest price increase when its weight is smallest. If price indexes over time are built up by cumulating the measured "price change" at each fee schedule revision, the result is that measured prices slip further and further behind actual. For Laspeyres' indexes of course this problem doesn't exist since all weights are constant. But a current weighted Paasche index must use truly current weights, it should not be built up from a sequence of single period indexes, each of which uses different weights. In the short run the biases are probably insignificant; but in the long run the result of the "see-saw" behavior described above will be downward biased prices.

More important than this sort of bias may be problems arising either because procedures are subdivided and separately billed under fee schedules which were previously lumped in together, or because physicians may adjust their criteria for determining billing categories. If a treatment which could have been carried out in one initial visit is spread over several, the result is a higher price for the treatment and a social cost equal to the lost time of the patient. But data on price and quantity of medical services will show no price increase and an increase in total output. Thus a rise in price and a loss of welfare shows up as a rise in welfare (output = welfare) and no price change. Less perverse is a simple reclassification of patients from initial visit to complete exam, here welfare is unchanged and all that takes place is an unrecorded price increase and an apparent output increase.

None of the data we have available really bears on this question, although it is possible that some of the discrepancy noted in chapter one between recorded price changes and physician gross income changes may result from this sort of "productivity change." Such shifts in behavior could lead to really serious mis-statements about price and productivity change, but we must emphasize that nothing in the foregoing is meant to imply that this is happening. The data available from 1957 to 1969 simply do not bear on the question; but this sort of adjustment can happen and is much more likely to result if administrative restraints are placed on measured price increases.[8]

---

[8] Canada, Department of National Health and Welfare, *Task Force Reports on the Costs of Health Services in Canada*, Ottawa, Queen's Printer, 1969, Section 9, pp. 257-262, discusses these forms of manipulation of fee schedule items in order to increase actual prices in the pre-1968 period. The author as "informed observer" clearly believes that this sort of behavior was common, but no evidence is offered in support.

chapter five

CONCLUSIONS

The results of this study may be grouped under three headings, according to their implications for data on medical prices, for interpretations of medical market behavior, and for public policy towards medical care.

MEDICAL SERVICE PRICE DATA

Our knowledge concerning the behavior of actual medical prices is very weak, and much of what we think we know probably "ain't so." Examination of total medical payments per capita and per physician combined with reasonable assumptions about specialization and productivity change suggests that average actual prices paid for medical services in Canada have risen about 4.5-5 per cent per year from 1957 to 1969, while the medical care component of the Consumer Price Index has risen 3.3 per cent per year on average. The all-items CPI has risen at 2.4 per cent per year. It is true that the services component of the CPI has risen four per cent, but the argument for using this index as a standard against which to compare medical price change rests on an assumption that productivity cannot be increased in service industries, such as medical care. If productivity increase is assumed zero in medical care, our estimates of annual price change must be revised to 5.5-6 per cent.

The lagging behavior of the Consumer Price Index medical care component seems to be primarily due to increases in the ratio of actual to list prices. Comparisons of this component with more broadly-based fee schedule indexes (where these overlap) suggest that it is not biased downward significantly due to its small sample coverage or its incompletely representative range of items included. Nor does the use of base (Laspeyres') rather than current (Paasche) quantity weights seem to affect its longer-term properties as a deflator. It should be noted, of course, that these somewhat tentative conclusions are based on comparisons of the overall trends in the CPI component with other rather fragmentary indexes. We know little about the validity of year-to-year movements although these annual shifts would dominate any attempt at sophisticated statistical analysis.

The concept of productivity change referred to above must be carefully qualified, in that it has no normative or welfare implications. The procedures used to calculate actual price increases require assumptions about the rate of increase of price-adjusted billings per physician, and these increases are "productivity increase". Whether this is an increase in the overall efficiency of resource use in the economy, or whether it is "right" that this increase be appropriated in rising physician incomes, is not at all obvious. For example, if billings per physician rise because physicians use more hospital facilities and personnel supplied by the community, or because they substitute office calls (patient waiting and travel time) for house calls (physician waiting and travel time), we cannot assert that the overall productivity of the economy has risen as a result of increased billings per physician. Still less does this form of "productivity improvement" confer on physicians a "right" to corresponding increases in income.

The introduction of universal medical insurance plans in each province of Canada has now made it possible to upgrade significantly our knowledge of medical care price behavior. Present insurance plans record the type of service supplied and price paid for each medical care transaction taking place through the fee-for-service nexus so that it is now possible at least in principle to centralize this data and to generate both current and base-weighted medical price indexes for each province and Canada-wide. The Department of National Health and Welfare has begun to produce such indexes, and should be encouraged to publish these as a substitute for the defunct medical care component of the CPI.

At the same time, such indexes should be extended to take account of two phenomena, extra billing above or outside the fee schedule, and a "price drift" within the fee schedule resulting from the reclassification of one procedure as several, billed separately, or the shifting of definitions so as to move certain procedures from less to more expensive categories. It is not clear how extensive these forms of behavior are, and informed observers disagree on the subject, but physician income data suggest that such "price drift" may have been substantial in the past. Extra billing can be picked up in part by surveying patients; each time a patient is informed that a payment for medical services has been made on his behalf he could be sent a returnable card on which to record any payment he personally made to the physician. Larger amounts, such as payments for uninsured cosmetic surgery, should show up as deductions on income tax returns. Such data sources might be somewhat shaky, but they would certainly improve our present information. As for "price drift," this could be detected by scanning utilization records to observe ratios of different types of procedure to one another, or incidences of certain types of procedure over time. This would not involve looking for "outliers" or individuals with peculiar practice patterns, as is said to be done at present, but rather attempting to detect behavioral shifts in the norms of the whole profession which cannot be explained on technical grounds. Thus shifts in the ratio of first to subsequent office visits, or diagnostic procedures per visit or per thousand population, should indicate by their behavior over time the presence or absence of "price drift" within given fee schedules. Such aggregate data could of course be published, as they involve no confidentiality problems and are readily accessible to provincial medical care insurance commissions.

At present, however, such basic trend analysis may not be carried out and is certainly not reported publicly. It is quite extraordinary that vast quantities of data on the cost and volume of medical services in each province, by physician, by patient, and by service procedure, are currently available to the provincial commissions and yet are subjected to no public analysis or scrutiny. Considering that medical care is now one of Canada's most costly public expenditure programs, minimal standards of governmental accountability would appear to demand that this data be opened for analysis (subject to the confidentiality requirements of patients) *at least* by such government departments as are responsible for monitoring the effectiveness of public programs. Yet a billion dollars is now spent by the governments of Canada without this elementary form of safeguard.

In addition to the preparation of better data on the price behavior of medical care provided by fee-for-service practitioners, it is important that either Statistics Canada or the Department of National Health and Welfare begins to generate information on the cost of salaried care. About 25 per cent of Canadian physicians are salaried practitioners, a large proportion of whom provide patient care in hospitals on a salaried basis. Many of these are interns or residents, whose activities contain an educational component as well, but a substantial amount of medical care is provided by these physicians and its costs are buried in hospital expenditure. The resulting overstatement of hospital costs and understatement of medical costs can be roughly judged at $50–$100 million, since more than 5,000 physicians are involved. An estimate of this magnitude should be sorted out from existing hospital cost data, and its behavior included in calculations of the cost of medical services.

THE BEHAVIOR OF THE CANADIAN MEDICAL MARKET

To analyze the behavior of any price index it is necessary to postulate some sort of model, implicit or explicit, of the circumstances under which the priced good or service is purchased and the way in which these interact with or determine its price. This study postulates a relatively general model of the determination of medical care prices, utilization per capita, and shortages, which embodies concepts from a variety of other models in the literature and provides a relatively general framework into which one can insert different parameters. The crucial feature of this model is its assumption that physicians can influence directly the demand for their services at any given price; thus the naive "demand curve" is relegated to a subsidiary role even in the absence of universal health insurance.

In this model the physician has some discretionary power over quantity supplied at each price level, or over price charged at any given workload, and he can adjust both variables simultaneously to attain income and workload targets. He can thus no longer be characterized as an income or profit "maximizer" and the behavioral assumptions become distressingly fuzzy. It appears, however, that this fuzziness is unavoidable as we approach the real world.

By log-linearizing this model and solving for its static equilibrium responses, and by assuming directions of effects among its variables, it is possible to indicate the effects of shifts in exogenous factors on such variables of interest as the average price of medical services, volume available per capita, average net income per physician, and the physician shortage as perceived by physicians. The variables shifted in this study were physician stock, physician income aspirations, exogenous demand factors, and the level of medical service output per physician desired by physicians. The latter would increase if, e.g., physician assistants could be hired by physicians to perform some medical services, for which the physician submitted a bill.

Many of these responses are indeterminate if nothing is assumed about relative magnitudes of influences of one variable on another. The internal structure of the price-determining equation is the key, however, and it turns out that if the elasticity of response of prices to physician income aspirations is greater than to physician perceptions of "shortage," the model makes certain predictions. Increasing the stock of physicians tends to increase medical prices and costs. Increases in exogenous demand per capita lower prices but raise services provided and costs per capita. Increased desired workload per physician will restrain medical prices but expand services and on balance will increase medical expenditure per capita. Universal comprehensive health insurance simplifies the model and guarantees that expansion of the physician stock will increase services available per capita. (In its absence price increases could conceivably cut into demand although this is not likely). In predicting increases in services supplied, of course, the model does not distinguish between "reduction in unmet need" and "increased over-doctoring". To do so one would need more knowledge of the relative responsiveness of more or less "needed" services to physician or physician-assistant supply. One might speculate that less "needed" services were more responsive to increased supply because hard-pressed physicians will ration their time so as to provide more services to the most ill patient, in which case the prevalence of excess utilization rises with per capita services. This would indicate that, e.g., increasing the physician stock would increase the relative prevalence of over-doctoring as well as prices per unit of service and medical costs per capita. But one cannot be sure.

Because of the poor quality of existing price data, no effort was made to fit the whole behavioral model simultaneously. Rather, its implications were tested against provincial data on the physician stock, gross and net incomes, wage and salary and personal income data for the whole community, and a variety of different price measures. Conclusions were that physician locational decisions are weakly sensitive to net income differentials among provinces, but that changes in the physician: population ratio do not call forth *completely* offsetting changes in volume of services supplied. Thus there is a tendency for physician incomes to rise less rapidly in provinces with a large influx. Prices may rise more rapidly under these circumstances, but this is not entirely clear. Nevertheless price *levels* tend to be higher in provinces with high physician:population ratios. Overall, physician incomes seem to be driven not by changes in price levels or by incomes in the surrounding community but by incomes of physicians in other provinces. The most prominent feature of the 1957-69 period has been the catching up by Maritimes physicians with those in the West. This catching up has been much greater than for Canadians in general, so ratios of physician incomes to other workers' incomes in the Maritimes have grown substantially. This catch-up process does not appear finished, however, as the leader provinces, Alberta and Ontario, are as far ahead of the rest in 1969 as British Columbia (now well back) and Ontario were in 1957. This data tends to support a pricing model based on physician income aspirations rather than on shortages; certainly the relative availability of physicians has grown steadily greater throughout the period so that if it were not for possible changes in tastes, education, income and insurance, we could argue that the physician "shortage" has been reduced in all the Canadian provinces over this period of rapidly rising prices. The increases in output per physician assumed in estimating true price change imply an expansion of 18–29 per cent in output per physician (the higher estimate corresponding to the lower estimate of price change) and combining this with a 17.2 per cent increase in physicians per capita, 1957–69, leads to an expansion of 38–51 per cent in medical services supplied per capita over this period.

Support for the income aspiration model found in the examination of interprovincial data is hard to find in data on prices within specific fee schedule categories. A very large drop in demand for obstetrical services has taken place 1957-69, it appears that the volume of suppliers has remained static, yet prices have risen at about the same rate as medical prices generally. This is inconsistent with both shortage pricing, which would predict a relative fall, and income pricing which would predict an even faster rise. On the other hand, laboratory services have seen a sharp rise in "demand," although this demand is from the physician in the first instance, associated with very low rates of price increase. This would support income pricing, except that output per physician has risen rapidly due to technical advance. Thus both forms of pricing predict the observed behavior. The major problem is that in most specialties we do not know how advances in output per physician compare with the average for medical services generally. This information can be generated with existing data available to medical insurance commissions.

We observe that the shift from home to office calls has taken place in the absence of any change in measured relative prices. (If anything, the office call becomes more expensive to the patient as the opportunity cost of his own time rises over time). This is wholly inconsistent with "shortage" pricing, which would assert that the decline in home visits should come as physicians raise their relative prices to reflect their greater time input. This has not happened; the evidence is only consistent with physician manipulation of demand so as to increase incomes. This does not directly confirm the income pricing model, since it still does not tell us why both home and office visit prices have risen but it does reject the alternative, conventional economic supply-and-demand model.

In comparing the total of initial home and office calls (patient initiated services) to consultations (physician initiated services) for insured populations, we find that the latter have risen much faster than the former from 1957 to 1967. This suggests that increasing availability of physicians increases the amount of service supplied which is at the discretion of the physician. At the same time prices of consultations have risen faster than medical prices generally. These observations support the argument that physicians have substantial discretion over quantity of service, but tell little about price-setting behavior. This of course is hardly surprising, since our observations are drawn from insured populations only.

While direct statistical confirmation of the income-pricing model is rather thin, the supply and demand model was inconsistent with all the data studied. It is always possible to rationalize away the statistical failure of a model by appeal to other factors which could not be controlled. But if we combine the statistical results with the lack of theoretical justification for a supply/demand model in this market, and the evidence that physicians themselves believe that their prices are set to determine incomes, not to clear markets, the income-pricing model of physician pricing seems at least preferable to any alternative.

IMPLICATIONS FOR GOVERNMENT HEALTH CARE POLICY

A study of this sort does not lead directly to the recommendation of any particular scheme of institutional reform in systems of medical care delivery. To the extent that the analysis and conclusions above are valid, the medical care industry has been identified as a source of continuing sectoral inflation which is not adequately measured in currently reported statistics. Furthermore it appears that the organization of the market for physicians' services has not generated adequate restraining forces to mitigate this process, and that the introduction and spread of universal health insurance has simply completed the emasculation of an ineffective market. If the behavioral model of price and supply determination proposed in this study is correct, it has certain very strong implications for the likely success or failure of alternative reforms which might be introduced through public policy. We can take any proposal for institutional change and analyze how the model in this study would respond to the change, and then compare the predicted outcome with what the policy was intended to achieve. In this way the analysis above may allow us to classify different policies according to their relative likelihood of success, where success is defined in terms of a widely accepted set of policy objectives. In addition we may be able to identify any additional assumptions about the Canadian medical care industry which are necessary for the success of a given policy, and then to allow the reader to make his own assessment of the reasonableness of these assumptions.

The simplest statement of public policy objectives would appear to be that current rates of increase in Canadian medical care expenditures be moderated. Since the supply of medical care is so interconnected with the rest of the health care industry, however, one would add the requirement that other health care expenditures (particularly hospital care) should rise no faster and preferably should be moderated as well. Furthermore from the economists' point of view there is no gain in substituting indirect costs (patient travel, scheduling, and queuing time) for direct expenditure. And finally there should be no reduction in the overall level of health care made available to the Canadian people. These objectives can be reached by reduction of excess or unnecessary use of medical care, by restraining the rate of pure price increases in the industry, and by increasing the economic efficiency of medical care supply. Increased efficiency can come through technical change which increases output from each of the forms of input currently used in medical care production, or through the substitution of less for more expensive forms of input in performing the same task. It is important to recall that increased efficiency does *not necessarily* result either from increasing output relative to one particular input (e.g., increased services per physician) or from adding less to more expensive forms of input rather than substituting (e.g., training physician assistants and adding them to a rapidly growing physician stock).

There are essentially three basic "policy stances" which could be adopted to achieve these objectives. These are:

(1) the encouragement of extended self-regulation by medical suppliers;

(2) the imposition of incentives and/or controls on the patient and potential patient;

(3) direct intervention in the organization of medical service supply.

The third stance subdivides into two major alternatives: (3a) extended public regulation of earnings and working conditions with a salaried medical "civil service" as a limiting case and, (3b) creation and extension of market-type competitive forces in medical care with publicly supplied medical care competitive to private practitioners as a limiting case.[1] The model outlined in this study yields predictions about the effectiveness of each of these types of policy.

EXTENDED SELF-REGULATION

The first policy option, that of encouraging and supporting professional self-regulation, is essentially the position recommended by the Task Force on the price of medical care.[2] The federal and provincial governments should collect and make available to provincial medical associations detailed information on the relative incomes of physicians by specialty, province, and region, while the medical associations continue to set fee schedules and police practitioners engaging in procedural multiplications or other excesses. Moreover the individual physician would be bound by the fee schedule only if he accepted direct insurance plan payment. Such a policy would maximize the flexibility of the physician, and would amount to a continuation of conditions prior to universal medical insurance except that fee schedule decisions would be better informed and perhaps more equitable among physicians as a result. In addition an insurance "floor" under fees would enable individual physicians to raise their fees if they were prepared to incur collection costs.

---

[1] Some might wonder why Milton Friedman's private "medical department store" is not the limiting case. M. Friedman, *Capitalism and Freedom*, Chicago, University of Chicago Press, 1962, p. 159. Full "privatization" of the medical market, if it is to lead towards economically efficient results, requires that the massive information gap between producer and consumer be narrowed to a level nearer the gap in "most" private markets. It is hard to see how this can happen without public or "quasi-public" (unions, large consumer or corporate organizations) intervention.

Such a policy stance continues the present situation, in that it imposes neither regulatory nor market controls on physicians' fees and controls changes in output patterns only by scanning for deviants. One would therefore expect that it will lead to continued price inflation and cost increase at rates equivalent to the past decade and a half, or somewhat faster to allow for a degree of general inflation in the rest of the economy. This policy can be justified only if it is argued that for some reason there has been a break in behavioral patterns after Medicare and that past behavior patterns are no longer relevant. Certain assumptions about future behavior must also be made.

In the past, prices of medical services rose faster than fee schedules because uncollectable bills were being reduced and the ratio of actual to list prices was falling. Since Medicare this avenue of expansion has closed. It may therefore be argued that in future actual price increases will be more closely determined by changes in fee schedules; and if it is further assumed that medical associations will act "responsibly" and gear fee schedule changes to other price or wage changes, then it follows that the mechanism of price adjustment will no longer be as described in the model of this study. Medical care prices will rise at a rate equal to the base rate chosen for fee schedule adjustments, while costs will rise at a rate equal to the sum of this rate plus the rate of increase in the physician stock plus the increase in output per physician. Of course to achieve such self-regulation it would be necessary to ensure that individual physicians were bound by the association's schedule, not free to act on their own as recommended by the Task Force on the price of medical care.

How plausible are these assumptions? The view that fee schedules will determine actual price changes neglects the problem of "price drift", procedural reclassification and subdivision, which is not controlled by policing physicians with "unusual" practice patterns even if such a limited policy could be carried out. "Price drift" occurs under a given fee schedule when the majority of physicians change their practice patterns; small shifts in behavior by a large number have important cost implications. But it is hard to see how the elected officers of a provincial medical association could enforce a policy of controlling practice patterns of the majority or even a large group of their members, even if they should wish to. We have no present evidence of such capability or desire. There is some evidence, in Canada and elsewhere, that medical associations can and sometimes have restrained fee schedule increases when they believed this to be in the general interest. But it is a mistake to infer from this that voluntary restraint might be an effective long-term basis for regulation. If it became apparent that the relative income status of physicians was trending downward as a result of such a policy, it is doubtful if the policy or its authors could survive. The responsibility for determining the relative income status of its own members is far too heavy a burden to place on any professional group, even on physicians; and since Canadian physicians have in the past raised their relative income status steadily and rapidly, it seems most reasonable to assume that they will continue to do so.

---

[2] NHW *Task Force Reports, on the Costs of Health Services in Canada*, Ottawa, Queen's Printer, 1969, Vol. III, pp. 170-182. This is in some contrast to the generally activist position taken in the other Reports.

One may argue that these increases have been "accidental," due to the elimination of uncollectable accounts and the spread of medical insurance, and that physicians have not taken such factors into account in setting fee schedules. Once physicians realize how wealthy they are relative to other Canadians, they will voluntarily pause to allow everyone else to catch up. But this is an extraordinarily thin reed—physicians have not behaved thus in the past, why should they now?[3] Instead we would predict that self regulation will lead to a combination of procedural multiplication ("productivity advance") and fee schedule increases which will maintain the existing pattern of inflation.[4] This pattern might be modified by a short period of restraint while the medical profession digests its gains from Medicare, but within two or three years the previous pattern should re-establish itself with fee schedule levels probably rising faster in future because actual-to-list ratios have stabilized.

INCENTIVES AND CONTROLS ON THE CONSUMER

The second form of policy that one could apply to medical care is to attempt to control excess utilization or unnecessary care by directing financial incentives at the patient. These incentives include deterrent charges of $X per office visit or per hospital patient-day, or co-insurance charges which require the patient to pay a fixed percentage of his medical bill, or deductibles which require the patient to pay the first $Y of medical bills per year, or some combination of all three. Present insurance plans in several provinces are or may become similar to co-insurance plans if the insurance agency pays, say, 90 per cent of the physician's listed fees and the physician collects the other 10 per cent from the patient. Such plans are limited in scope in that they are intended to reduce excess utilization, but not to affect directly the prices of medical services or the efficiency with which services are provided. At best, therefore, they can only meet a subset of the public policy objectives outlined at the beginning of this section. There are, however, two major objections to financial deterrent plans directed at the consumer. The first is that they may not influence utilization. The second is that they may.

---

[3] The recent comments by the Chairman of the Canadian Medical Association Council on Economics provide little comfort in this regard. D. D. Gellman, "Medicare, Medical Income Disparities and Fee Schedule Changes: Facts, Fallacies, Problems and Positions, "*Canadian Medical Association Journal,* Vol. 105, September 18, 1971. He makes an energetic attempt to rationalize both present levels and past trends in physician incomes, and concludes that much of the economic conflict between government and physicians has been due to governmental mishandling of Medicare. He also notes that the medical profession has failed to recognize the impact of medicare on its income levels, and to develop internal policing mechanisms. The difficulty, however, is that his own charts do not support the notion of a sharp income break when Medicare was introduced; rather they support the contention of this study, that the inflationary dynamics of the medical care industry operated prior to and independently of Medicare. Thus his arguments do not suggest that Canadian medical associations are prepared to cope with the underlying economic structure of this industry.

[4] A simple policy of tying fee schedule changes to economic indicators, for example, could achieve this result. If fee schedules were tied to the Consumer Price Index the rate of inflation of medical care prices would equal that of the economy as a whole plus sectoral price drift, while medical care costs would rise at this rate added to the rate of increase of the physician stock. If instead fee schedules were tied to the GNP, the increases would be even more rapid.

There is general agreement that with some exceptions demand for medical care is not very sensitive to price.[5] This follows from our discussion above emphasizing the information gap between consumer and supplier of services in this market and the resultant role of the supplier in determining how much the buyer should consume. It is worth recalling that the expensive medical services whose utilization is rising most rapidly are physician-initiated, not patient-initiated procedures. To the extent that utilization does not respond to deterrent charges, these charges have the effect of a rather capricious tax on the ill which is collected either by the insuring agent or by the physician. The tax will be regressive, since the poor tend to be sicker and the sick often become poorer. One could justify such a tax only by appeal to a "benefits received" principle of public finance, but if that principle applied to health care then the government should never have intervened in this market. The only major effect of a deterrent change which did not deter would be to insulate the medical profession and the governmental insurance agency from one another. It would cease to be true that the medical profession's gain must always be the government's loss, since both could gain at the expense of the consumer/taxpayer. The confrontation aspects of the present insurance plan would be mitigated, as unorganized consumers are much less effective in bargaining with organized medicine than are governments. To the extent that provincial insurance plans now exercise some restraining pressure on fee schedules through "moral suasion", introduction of deterrents would relax this pressure and encourage increases.

The argument that there is *no* effect on utilization from deterrent charges is probably too strong. Deterrent charges undoubtedly have some restraining effect on demand, at least if they are set high enough. But as a strategy for reducing medical care costs, our model predicts that this will backfire. Suppose utilization falls. Then for a given fee schedule and physician stock, so do average physician incomes. Our model predicts that physicians will respond by raising their fees. And so long as the price elasticity of demand for medical care is less than unity, they will succeed in restoring their pre-deterrent incomes. The result will be less medical care supplied, at higher prices, with the same overall costs, but with some costs shifted from the government to the consumer. Only a very hardened cynic would call this a successful public policy. The counter-argument, that deterrents would lead to price-restraining competition among physicians, is simply naive. Such competition is irrelevant when fee schedules are centrally determined, and in any case such competition never developed when the market was made up primarily of self-paying patients. Why should it start if every patient is 90 per cent insured?

---

[5] H. Joseph, "Empirical Research on the Demand for Health Care," *Inquiry*, III. (1) March, 1971, and more extensively Cliff Lloyd, *The Demand for Medical Care: A Selective Review of the Literature*, Working Paper No. 71-9, Bureau of Business and Economic Research, University of Iowa, April, 1971.

There is still a further problem associated with "successful" deterrent plans, in addition to their inflationary impact on medical prices. The deterrent reduces overall utilization of medical services, but it also affects their distribution among individuals. Services are reallocated away from price-sensitive patients and toward price-insensitive ones. The desired effect of deterrents is the reduction of medically unnecessary service demand. But we have no evidence that the degree of medical necessity of a medical service is correlated with the price sensitivity of the patient. If we could be sure that the prospective patient was sufficiently informed about the medical implications of his symptoms or condition as to be competent to assess their severity, then we could argue that financial incentives would lead patients to reduce their demand for unnecessary and trivial services. On the contrary, however, sociological findings commonly suggest that ignorance about symptoms and their implications is most widespread among precisely those people who are likely to be most sensitive to deterrents—those with low incomes.[6] Deterrent charges will tend to ration care away from the poor and toward the middle and upper-income groups; but there is no reason to assume that in the process they will ration care away from less medically significant complaints. If the deterrent policy is modified to account for this by exempting all those below a certain income level, then its effect on utilization will be even more attenuated and it will be left as a capricious tax on those of the middle and upper-income groups who are unfortunate enough to become ill.

---

[6] This assertion is unfortunately not rigorously demonstrable. We can of course re-write the Slutsky equation as,

$$E_{ij} = S_{ij} - Y_iR_{ij}$$

where E_{ij} is the elasticity of demand for good i with respect to a change in price of good j, S_{ij} is the compensated substitution term in elasticity form, Y_i is the income elasticity of demand for good i, and R_j is the proportion of the budget spent on good j. If i and j are the same good, S_{ij} is always negative. We know that Y_i is positive (consumption of health care rises with income); thus we can rule out the possibility of "Giffen-ness" at least for health care as a whole. But the proportion of the family budget spent on health care (in a private market setting) tends to fall with income. (These trends are very clear in R. Andersen and O. W. Anderson, *A Decade of Health Services*, Chicago, University of Chicago Press, 1967). Thus the own-price elasticity of demand should fall (in absolute value) as income rises. The weakness of the argument is of course that the Slutsky equation is derived for infinitesimal changes and that if changes in price are large, the terms of all the relevant second-order matrices will shift. Nor can we expect that the utility functions of higher and lower income groups are similar.

We can, however, reinforce this argument with impressionistic considerations. It may be true that higher income shoppers are more careful and price-conscious, or put another way, they find investment in information more worthwhile because they spend more. But in the "health market," popular magazine articles on choosing a doctor emphasize "quality" to the exclusion of price. For the better off, at least, the preference ordering seems to be lexicographic—first quality then price. Moreover, the famous "Robin Hood" or sliding-scale billing practices of fee market medicine are consistent with the physician perceiving the well-off as being less price sensitive than the poor.

Informetrica LIMITED

The adjustment process will not end there. If deterrents become significantly large so that consumers find their budgets seriously affected by "needed" medical care (which is necessary if the charges are to affect demand, given the uncertainty which surrounds this market) then private insurance will reappear. The driving force behind the introduction of private medical insurance was a combination of physicians' dissatisfaction with uncollectable accounts and consumers' desire to avoid unpredictable expenses. But once private insurance reappears, patients are again relieved of deterring incentives and physicians are relieved of whatever trivial competitive pressures might otherwise have developed. The deterrent system thus faces a dilemma; if it is trivial it has no effect, and if it is significant it calls into existence private insurance which robs it of effect. And finally if deterrents really could "work" in the sense of controlling utilization they would tend to drive up medical prices, lower medical care output and reallocate medical care from the poor to the better-off. This suggests that a deterrent policy aimed at consumers may be less than socially optimal.[7]

DIRECT REGULATION OF PHYSICIANS

Discussion of the first two policy options suggests that they will be rather unfruitful. The implication is that only some form of direct intervention on the supply side of the medical market is likely to moderate its inflationary price behavior and escalating costs. This opens up an enormously complex area encompassing the whole realm of alternatives for medical practice organization, and we shall try to sketch in only a few relevant issues. It is obviously impossible at this stage to present a blueprint for medical reorganization, and as emphasized above, that is not the intent of this study.

The simplest approach that one might take is the direct governmental regulation of fee schedules. To be effective, this would require supplementary legal measures to bind physicians to the schedule and prevent direct extra billing to the patient. This sort of problem will recur in any regulatory plan which seeks to moderate inflationary behavior while preserving fee for service. Aside from this general difficulty, however, direct fee regulation involves two areas of major conflict between regulatory agency and government. These are the policing of "price drift" and the determination of fee schedule changes.

---

[7] After a careful study of Saskatchewan's "deterrent" office visit fee introduced in 1968, R. G. Beck concludes that it probably reduced expenditure overall by about six per cent. (R. G. Beck, *An Analysis of the Demand for Physicians' Services in Saskatchewan*, unpublished doctoral dissertation, University of Alberta at Edmonton, Spring, 1971). This reduction was spread very unequally, however, being heavily concentrated among large families and families with aged heads. (These of course tend also to be low income families). For some "families" (single persons aged 25–55) utilization actually rose—one can conclude that this reflects either reduced rationing effects (shorter queues) or physician-induced demand. Actual expenditure in Saskatchewan did not fall, however, since the deterrent charge introduction coincided with an increase in fee schedules. Thus the Saskatchewan experience bears out the model's prediction exactly, from 1967 to 1968 as deterrents were introduced overall services in real terms fell; services to the aged and poor fell most while young adults and middle-aged gained; prices rose, and physician incomes rose. (Physician gross and net incomes did rise less fast in Saskatchewan than in Canada generally). This does not prove any causal connection between the fee schedule revision and deterrents, but it justifies a certain scepticism toward deterrents as a cost control device. Worse still, there is some evidence that in Saskatchewan the impact of deterrents may have been short-run and that utilization may be increasing back to its pre-1968 levels.

The first problem has now been discussed at length: how does the government control the volume of billings under a given fee schedule? One may study practice patterns in a general way as recommended above in measuring the price drift component of medical price inflation. But direct regulation requires the regulator to make binding decisions in specific cases concerning the "medical need" for a particular form of follow-up care or a particular treatment procedure. Such decisions will involve an inevitable arbitrary component and corresponding friction; yet if this sort of regulation is not carried out the result will be that determination of fee schedules alone will allow prices to continue to rise.

But even if particular fee schedules are effective once promulgated, the government must also accept the task of determining future schedules and setting both average increases and relative procedural weights. The determination of the internal structure of fee schedules is a complex problem combining technical detail and medical politics, and is a natural source of continuous and difficult conflict in addition to conflict over the more fundamental question of how fast the overall schedule should rise. Continuous conflict of one form or another between physicians and government is now inevitable, at least as long as medical practice is organized in its present form. This follows from the fact that the government and the medical profession meet one another in a bilateral monopoly situation in which the gains of one are the losses of another; and this is the only form of control which can at present be exercised over medical prices and incomes. Such conflict is not unhealthy *per se*, but it should be minimized and focussed only on the crucial issues. Direct fee regulation generates side issues such as the internal fee schedule structure which are only secondary interests of public policy.

This consideration suggests some form of pooling as a superior alternative to direct regulation. It has been argued in some quarters that provincial governments should set aside a fixed sum of money to finance medical care each year, and then divide this sum by total billings during the year to determine the value of a billing dollar in terms of a payment dollar. If billings come to $160 million in a given year while the allocated pool is only $150 million, then each account would be paid at 93.75 per cent. Again, of course, extra billing and other forms of side payment must be ruled out. The problems of fee schedule determination and practice pattern regulation could be left entirely to the medical associations, who after all have the requisite technical competence to deal with them, while the government role could be restricted to statistical support.

A pooling policy of this sort has powerful advantages, particularly relative to a policy of direct fee schedule regulation. It is easy to set up and administer in the existing framework, and involves the government in minimal regulatory activity. It has the disadvantage of tending to reward physicians who practice procedure multiplication at the expense of those who do not; but this places a strong incentive on medical associations to meet their responsibility for policing such activity—an incentive which does not now exist. The role of the governmental insurance agency is limited to that of determining the annual increases in the pool, increases which might be tied to several different indicators depending on the objectives of the plan. Thus a pool which rose as fast as the sum of the growth of the physician stock and the average wage would be designed to maintain relative physician incomes, one which substituted cost-of-living for average wage would hold physician incomes constant in buying power, and a pool based on population growth and cost-of-living would hold constant the real value of medical services purchased per head. The latter approach would cause physician incomes to fall as the stock of physicians rose, a competitive market result through a roundabout route![8]

Over the longer term, problems might arise with such a plan if the increased incentives to procedural multiplication which it creates for individual physicians should overcome the increased incentives for control which it places on medical associations. Increased activity per physician may not affect medical costs; but it can place upward pressure on hospital expenditures and on the indirect time and trouble costs incurred by patients. It may also lower the effectiveness of medical care. At the same time steady deterioration of the ratio between billing and payment dollars may generate heavy long-run pressure on the government to revise its pool procedure. But all of these are uncertain future contingencies which could be faced as they arise. It may be that an "incomes policy" directed at a small, wealthy, and vocal group would tend to be eroded over time, but in the near term a payments pool seems to hold out the best hope of reconciling fee-for-service with greater regulatory control over medical prices.

If in the longer run such a plan is unworkable, then the next regulatory step would have to be to do away with fee-for-service.[9] The extension of salaried arrangements leads into a number of very complex problems which have little to do with the problem of price determination *per se*. The "price" of services becomes implicit in the average salary and workload of the physician, and it would be necessary to study the determination of these factors under any such scheme in order to measure "price" behavior. One can of course make some general observations about the salaried alternative. The financial incentive to "over-doctor" is replaced by a workload incentive to "under-doctor;" how serious a problem this is depends on one's judgments of the current prevalence of "over-doctoring", of the relative strengths of financial and workload incentives, and of the relative difficulty of policing each problem. In addition salaries would require careful adjustment for workload across physicians in order to gear remuneration to effort in an indirect manner.[10] These management problems are of course not unique to medical care, but they may in the medical care context reinforce the desirability of clinics or other groupings of physicians in units which make regular peer review possible. Such review makes the policing of "under-doctoring" and the determination of relative salaries on the basis of workload a much more accurate process.

---

[8] Economic indexes are tricky things. We have been discussing the adjustment of a pool, not of a fee schedule. But note what happens if *fee schedules* are adjusted upward at the same rate as average weekly wages and salaries, as suggested by the Task Force Reports on medical prices (*op cit* p. 246). As output per physician rises due to productivity increase or price drift, gross earnings per physician will rise faster than average wages. Since overheads tend to rise more slowly than gross incomes, net incomes rise even faster. Thus such a policy will *at least* maintain physician relative income status (if output per physician is static) and will almost certainly continue its upward trend. The rate of increase of medical costs will be the sum of the rates of increase of average wages, output per physician, and the physician stock. One is left wondering whether the proposal was intended to lower or to raise medical care costs.

[9] Extension of "community clinics" or instant group practices is not really an alternative if physicians continue to be paid on a fee-for-service basis. The savings to be made by reducing overhead costs are relatively trivial—it is worth recalling that while gross incomes per physician have risen 122.7 per cent from 1957 to 1969, net incomes have risen 140.1 per cent and expenses have risen 94.5 per cent. It is clear that expenses have not fueled the inflation. The clinic mode of practice combined with fee-for-service provides no incentive for the physician to restrain either his fees or his workload; it may lead him to treat fewer cases in hospital but the cases thus transferred out of the hospital system will be the least expensive cases. Thus there is not likely to be much net saving so long as fee-for-service payment modes persist.

Additionally, of course, salaried medicine introduces a host of problems in the area of consumer choice and consumer influence. How does a salaried system maintain a degree of free physician choice? How does it respond to technical progress? Can the dissatisfied customer switch physicians or clinics and still maintain "continuity of care?" Should there be scope for "side payments" if individuals want to purchase extra care? Will a salaried system breed a medical bureaucracy as expensive as the present system but less sensitive to the consumer? In all these areas one must weigh the performance of alternatives against the actual, not the idealized, performance of the present system. These issues are far too extensive to tackle here.[11]

We have argued that additional regulation is one possible route to the control of medical price inflation, with the *caveat* that in this complex area regulation may breed ever more regulation.[12] This might lead one to consider an alternative policy which might preserve the independence of fee-for-service practitioners, and yet introduce some forms of competitive restraint over pricing and output behavior. The provincial governments could begin to provide alternative medical facilities for handling certain types of problems, using salaried staff with a relatively low mix of physicians to other types of personnel. Free clinics could provide immunization services, well-baby care, pre-natal supervision, or any other standardized service not requiring direct physician intervention, and the staff of such clinics need not include physicians. More serious problems could be referred out to a private practitioner, or if the volume of problems was large enough a physician could be brought on salaried staff. This is hardly a new idea, and is of course done in many places now. The difference is that such clinics should be established and "marketed" in a genuine sense, that they should be made as attractive and convenient as a physician's office (which will *not* happen if they are controlled by a part-time private practitioner), and finally once such facilities have been established and a public educational campaign has made people aware of their availability, insurance coverage should be withdrawn for competitive services provided by a private physician. Thus the consumer may choose between well-baby care provided free by a clinic, or at a fee by a paediatrician. The intent would be to enable people to choose between less and more expensive forms of medically equivalent service, but to require those choosing the more expensive form for reasons of personal preference to pay for this privilege. Insurance coverage of private practitioner visits would then become dependent on referral from the public clinic, and such referral might be to general practitioner or to specialist as the case warranted.[13] The consumer would retain free choice of physician, and would always have the right to seek the physician himself and pay his own bill. At the same time, of course, it would be necessary to ensure that physicians were not able to discriminate in favor of self-paying patients, say by the allocation of hospital beds, but unlike the British National Health Service plan this system would not create a financial incentive for such discrimination. The fee for a given service would be the same, regardless of whether the patient was referred by a clinic and hence insured, or self-paying.

---

[10] Interestingly, the Task Force Reports on medical prices rejected salaries because of workload variability across physicians (*op. cit.*, p. 173, p. 230) and yet recognized the current fee schedules "probably . . . developed haphazardly" . . . (p. 239). In view of the wide differentials in earnings known to exist across specialties, and the position expressed by the Task Force that such differentials cannot be justified on a lifetime basis (p. 245), how can one seriously argue that the workload problem is *worse* under salary than under fee-for-service remuneration? No evidence supports this position.

[11] An assessment of the strengths and weaknesses of various potential payment mechanisms, relative to the social objectives which one might wish the medical industry to meet, is given by J.-Y. Rivard, *La Rémunération du Corps Médical*, Annexe 13 to the Report of the Commission d'Enquête sur la Santé et le Bien-être Social, Gouvernement du Québec, Quebec, July 1970. His primary purpose is descriptive and analytic rather than normative, but he concludes that the disadvantages of fee-for-service outweigh its advantages and closes by recommending either pooling as above or some form of capitation payment closely geared to the actual characteristics of covered populations and the optimal workloads of suppliers.

[12] In this context we should note that the consequences of regulation in private industry are often rather depressing, as the regulators tend to become captives of the regulatees. In this context, see G. Stigler, "The Theory of Economic Regulation," *The Bell Journal of Economics and Management Science*, 2, (1) Spring, 1971. The effects of this capture in the U.S. pharmaceutical industry are described by H. D. Walker, *Market Power and Price Levels in the Ethical Drug Industry*, Bloomington, Indiana, Indiana University Press, 1971.

Such a plan would reduce the demand for physicians' services on a selective basis, cutting out the most standardized areas first. It would also reduce unnecessary utilization, since the clinic could perform the screening and triage function on medical grounds which advocates of deterrent charges wish to see based on economic incentives. But in the short run it would probably drive up the price of medical services supplied by private practitioners, as they sought to recoup income losses resulting from reduced business. This should tend to restrict self-paying patients, and so encourage the use of clinics as a "port of entry" to the medical system. For a given physician stock it could lead to expanded medical costs, however, if physicians on average could recoup their pre-clinic income and thus the clinic costs were merely superimposed on the existing system.

This highlights the substitution aspect of the proposal. If alternative forms of medical service supply are introduced, the physician stock (per capita) must fall. The new facilities must substitute for physicians, not add to them. The level of medical expenditures in Canada is currently determined by the number of physicians and by their earnings. If the rate of expansion of these expenditures is to be moderated, then either the number of physicians or the average income per physician (or both) must grow more slowly. The former implies the use of substitute services, the latter implies regulation of physicians' incomes. There is no other way.

---

[13] The screening and referral process is essential, otherwise patients choosing, e.g., well-baby care by paediatrician, would always be able to find *some* symptom justifying physician care. The incidence of asymptomatic well-baby examinations would drop sharply, and policing the "respiratory complaints" or whatever justified the (insured) physician visit would be an impossible task.

APPENDIX 5–1

THE FUTURE OF THE PHYSICIAN STOCK IN CANADA

The conclusions of this study have obvious implications for policies to expand the physician stock in Canada. It is often argued that Canada suffers from a shortage of physicians and that public policy should be directed towards expanding the available supply. In developing this background attitude, the forecasts of the Hall Commission have been highly influential.[1] The Hall Commission made estimates of the Canadian population from 1961 to 1991 and then compared this with estimates of the available physician stock made on the basis of assumptions about rates of output of existing or planned (in 1964) medical schools and net immigration of physicians. Their estimates indicated that population per physician ratios in Canada would drift downward slightly until 1971 and then rise rapidly over the following 20 years unless major efforts were made to expand the output of Canadian medical schools. The Commission interpreted this rise as an increasing shortage of physicians, and rather than giving serious consideration to alternative ways of supplying medical care they recommended the construction of four new medical schools by 1971 in order to hold population:physician ratios roughly constant from 1961 to 1991.

To forecast the future is to risk almost certain error. But the Hall Commission had rather extraordinary bad luck in recommending major long-term public investments on the basis of population forecasts arrived at just before the great break in the postwar demographic trend. Table A. 1–1 presents the data used by the Commission and compares it with actual population data for 1966 and 1971 plus forecasts to 1981. These latter forecasts are based on W. M. Illing and others, "*Population, Family, Household, and Labor Force Growth to 1980*", Economic Staff Study No. 19, Ottawa, Queen's Printer, 1967, but were updated by the author in early 1970 to allow for more recent trends. Data for 1970 and 1971 suggest that these forecasts may themselves be somewhat high.

Thus, even if the physician stock estimates of the Hall Commission were correct, present population estimates would indicate a continuation of the expansion of physician availability into the 1980s. The bad luck of the Hall Commission did not end with population, however, as they also underpredicted rates of net immigration of physicians. As suggested in Appendix 3–3 the physician stock is a treacherous statistical concept, and comparable census data for 1971 are not yet available. The similar though slightly lower Seccombe House definition (see Appendix 3–3) yields an estimate of 26,158 Canadian physicians in 1969, and this measure has been rising by 2.5–5 per cent per year for several years. A conservative estimate of 2.5 per cent increases in 1970 and 1971 yields about 27,500 active physicians in Canada in 1971, for a population:physician ratio of 788.4 compared with the Commission's 852.9 estimate, and a fall of

---

[1] Canada, *Report of the Royal Commission on Health Services, Vol. I.* Ottawa, Queen's Printer, 1964, pp. 523–552.

TABLE A. 1–1

(1) Year	(2) Hall Population Forecast	(3) Recent Population Forecast	(4) Hall Physician Stock Forecast	(5) (2) ÷ (4)	(6) (3) ÷ (4)
1961	18,238[a]	18,238[a]	21,290[a]	856.6[a]	856.6[a]
1966	20,296	20,215[a]	23,708	856.1	844.2[a]
1971	22,590	21,681[a]	26,486	852.9	818.6[a]
1976	25,234	23,461	28,730	878.3	816.6
1981	28,247	25,291	30,702	920.0	823.8
1986	31,546	—	32,191	980.0	—
1991	35,107	—	33,417	1050.6	—

[a] actual

SOURCES: *Report of the Royal Commission on Health Services, op. cit.*, p. 524, p. 754.

eight per cent from the 1961 level. Present indications are that this fall will continue at least until the 1980s.

The methodology of the Hall Commission, combined with more recent information, thus indicates a sharp and unexpected expansion of physician availability from 1961 to 1971 which will be maintained for at least another decade. As emphasized in Appendix 3–3, however, we cannot draw from this data alone the inference that there is no "shortage" of physicians in the sense of an imbalance of supply and demand. It may be that people's desires for access to physicians have risen even faster, for a variety of reasons. Commonly, economists regard rapidly rising prices and high incomes of suppliers as evidence that such an imbalance exists, and some have argued that these phenomena in the medical service industry are the outcome of growing demand interacting with restricted supply. The conclusions of this study are that the reverse is true; in the peculiar economics of medical care rising prices are a consequence of *increased* supply and incomes are not primarily determined by market forces. Expansion of the physician stock, according to this theory, leads to increased medical services for the population which may not be related to need, but leads also to price inflation and thus has a dual upward effect on medical expenditures. Rapidly escalating medical costs are a consequence, not of physician shortages, but of surpluses. On this interpretation, the rapid increases in medical prices and services per capita of the past decade or more are the logical result of increases in the physician stock, and thus cannot serve as empirical evidence for the existence of a physician shortage.

If we put these two bits of information (the behavior of population:physician ratios and of medical service prices and costs) together with the argument of chapter five that public policy towards medical care should focus on the training of substitutes for or alternatives to physicians, it would appear that a serious program to control the escalation of medical costs must also control the growth of the physician stock. The simple arithmetic of medical service costs, number of physicians multiplied by average payments per physician, highlights the inescapable alternatives, either the numbers must be restrained, or the average incomes must be restrained, or costs cannot be restrained. Obviously limiting the physician stock and accepting an uptrend in population:physician ratios implies that alternative sources of service supply are necessary; but alternative sources of supply will only serve to inflate costs further if the physician stock is not simultaneously limited.

This suggests quite strongly that Canada should not expand its capacity to train more physicians. If the existing stock is already too large for the medical care of the future, which will depend less on the physician and more on less expensive alternatives, then expanding the existing stock will merely exacerbate the present problem and delay the introduction of more efficient approaches. The existing stock of medical school facilities is already capable of training enough physicians to maintain present availability for the next decade at least, and by that time more efficient alternatives can be developed which will make possible a long-run downshift in the physician:population ratio without reduction of services. This is the sort of phenomenon we observe in the dental industry, as a combination of the effects of fluoridation and the dental hygienist.

In the interim, we must guard against a widely urged but most peculiar form of social policy, that of restraining the growth of physician stock by limiting immigration and expanding domestic medical schools. The argument that qualified Canadians are unable to enter the profession is of course irrelevant—any profession which succeeds in achieving such spectacular relative income gains is bound to attract applicants in large numbers. This has nothing to do with the public policy issue, which is rather: should Canadians tax themselves still further so as to allow a slightly larger number of Canadian students to pursue the path to almost certain wealth? It takes relatively little economic sophistication to realize that training a domestic physician is very expensive due to the unusually large element of public subsidy in the training program. From this it follows that Canadians as a whole gain when a physician of equivalent quality chooses to immigrate. Nor is it surprising that we have a large number of such immigrants—every year immigrants make up a quarter to a third of the addition to Canada's labor force, and by deliberate selection of the Canadian government they are concentrated among the most highly educated and skilled occupations. This is implicit recognition of the fact that Canada gains from such immigration—why then treat physicians differently? Why recommend a policy of limiting migration and expanding domestic schools so as to place a larger burden on the Canadian economy (and taxpayer) for the same physician stock?

A number of arguments have been advanced. First, it is suggested that "dependence on foreigners" is risky. Suppose the supply is cut off—foreign countries forbid their physicians to leave—Canada will be without physicians. This argument is a simple example of the stock/flow confusion, common in elementary economics. Since the physician stock in Canada is very large relative to the annual rate of flow of new physicians, very large changes in the flow have little effect on the stock. Appendix 3–3 indicates that the physician stock on a fairly broad basis is about 27,500 and is growing at about 1,000 per year. If this continued, by 1981 there would be 37,500 physicians. If the new inflow fell by *50 per cent*, there would be only 32,500 in 1981. A drop of 50 per cent, maintained for a decade, leads to a decrease of about 13 per cent in the stock. After five years, of course, the drop is about 7.5 per cent. The point of the argument is that massive short-term swings in flows have little effect on stocks, and it is stocks which determine availability. Only if changes in flow are maintained for several decades does a stock problem develop. But this means that there would be plenty of time to expand our medical schools in the future even if the flow of immigrant physicians dried up tomorrow. We might decide for reasons advanced above that we wanted the physician:population ratio to shift down over the next few decades. But even if we did not, the stock-flow mechanism gives us adequate time to react to a shortfall. Note however that the mechanism is *not* symmetrical. An excess stock of physicians will have effective working lives of 40 years or more, and facilities once opened are hard to close. Excess supplies of trained manpower, or excess capacity for their production, are more serious long-run problems, particularly if both are highly specialized.

A second argument against immigration attacks the assumption that foreign-trained immigrant physicians are equivalent to Canadian-trained. It may be that the overall quality of the physician stock would be higher if it were entirely composed of graduates of Canadian medical schools. An economist cannot of course answer the substantive question of whether or not this is a valid description of the situation. It is necessary, however, to point out that "quality" of training may have (at least) two dimensions, the range of procedures a man is competent to perform and the effectiveness of his performance of any given procedure. If it is argued that foreign-trained physicians are trained in a narrower range of procedures then it may well be that, since their training costs Canadians nothing, an optimal strategy requires us to import some physicians and train others, and to incur training costs only for those skills which cannot be freely imported. If on the other hand the argument against immigration rests on the assumption that foreign-trained physicians are more likely to bungle any given procedure, or are systematically less competent and so more likely to harm patients, then indeed one might wish to limit immigration. One might also suggest, however, that such an extreme position would require some proof, not merely impression and anecdote, and that at present procedures for monitoring the quality of performance of practicing physicians are so totally inadequate that one cannot seriously argue that such proof exists. If practice monitoring and periodic re-examination and re-licensure were carried out for *all* physicians practicing in Canada, regardless of their training, then it would become possible to detect systematic quality differences if such exist and to take appropriate action. Reduced emphasis on entrance standards and increased attention to actual performance of physicians in the field has much to recommend it as a policy, although the results of such a shift might be somewhat disturbing.[2] In the absence of such a regular review, which probably cannot be carried out by the profession itself for fairly obvious reasons, the only honest position is that we do not know enough about practice quality, one way or another, to formulate an immigration policy. We ought to find out. Statements by industry representatives are not substitutes for public scrutiny, in the medical industry or any other.

---

[2] See, for example, the sometimes hair-raising findings of a study by K. F. Clute, *The General Practitioner*, Toronto, University of Toronto Press, 1963.

A final argument which has more forensic strength than content is an appeal to public "morality". The argument is made that a wealthy country like Canada should not import expensive physicians from poorer countries who need them more. Thus put, the argument explicitly recognizes that Canadians benefit from the immigration of physicians but claims that it is immoral to do so. Forbidding entry to foreign-trained physicians would be a form of foreign aid. Such a position is of course contrary to our whole philosophy of immigration policy, which discourages laborers or other unskilled workers.[3] It may be that this whole philosophy is "immoral" and that we should encourage only the unskilled to emigrate to Canada, while forbidding all expensively trained, highly skilled foreigners. But why single out physicians?

An economist cannot comment with any special expertise on morality, indeed his training may induce a particular disability in such discussion. But it should be pointed out that the alternative "moral" position of Canadians accepting the costs of training all their own physicians and dutifully shouldering the burdens involved is not one in which the burdens are equally spread. Suppose Canada did cease to admit foreign physicians and instead acted to expand its own medical schools. Who gains, and who loses? Canadians as a whole lose, since now they must pay to train physicians who were formerly imported free. Potential immigrants lose, they were drawn by the expectation of higher incomes and better working conditions which they now cannot achieve. The countries whose physicians now cannot emigrate must be assumed to gain, but do they? If foreign countries were suffering as a result of physician drain, we might expect them to take steps to halt the flow. The fact that very large suppliers of the North American physician market, such as Great Britain, do not do so would seem to imply that they do not feel a present shortage. Instead the training of physicians for the lucrative North American market is said to have some of the characteristics of an export industry in certain foreign countries, and considering the incomes involved this is hardly surprising. In any case it is hard to see why Canadians should "morally" act to confer benefits on foreign countries which do not themselves seek such benefits. A more logical position, if we accept the "morality" argument, would be for Canada to stand ready to accept a request from any foreign government wishing to keep its physicians home. Canada

---

[3] From 1965 to 1971 the proportions of Canadian immigrants intending to enter the labor force who report themselves as professional, technical, or managerial workers, and as laborers, unskilled, are as follows:

	1965	1966	1967	1968	1969	1970	1971
Professional, etc.	24.8	26.1	28.3	33.1	35.0	32.8	31.6
Laborers	9.6	7.7	7.4	2.8	2.4	2.1	2.1

The effects of the immigration legislation revisions after 1967 are clearly evident in indicating the Canadian government's preferences, while drifts before and after that date may reflect either selectivity by Canada or changing perceptions of opportunities by potential immigrants.

would then refuse admission only to physicians from that country. Such a policy would of course be "discriminatory"—it would discriminate between those countries who wanted our assistance in this matter and those who did not.

Who then gains from the policy of domestic expansion and foreign exclusion? Obviously the largest gainers are the students who now get access to expanded medical schools and thus in due course to higher incomes than in any other occupation. Also gainers are those physicians and educators who get appointments and access to facilities in the new or expanded medical complexes. The expanded flow of interns and residents enables physicians with part-time teaching appointments to increase the volume of work which they direct and can bill for, and to spin off the less desirable "scutwork" with no financial loss. At the same time new graduates frequently work on salary or sharing arrangements with established physicians under which a share of their earnings is paid over to the senior physician or physicians. Thus there are direct economic advantages to physicians from the expansion of medical education in Canada. At the same time the long-run disadvantages are absent, because under present institutional arrangements the volume of work done can be expanded as the physician stock increases and prices can be increased without affecting demand. Thus existing physicians do not suffer from "new competition", and they gain from increased billings *so long as the new physicians are Canadian-trained.* It is of course very unlikely that present institutional arrangements will persist, but it is clear that an expansion of domestic physician production combined with a reduction of immigration is neutral in its effects on the Canadian physician market while it has significant economic benefits for those Canadian physicians and medical educators who are able to participate in the expanded training process. The "moral" policy therefore hurts Canadians generally, benefits Canadian physicians, hurts potential immigrants, helps Canadian medical students, and confers a dubious benefit on foreign countries which they do not appear to have sought for themselves. This seems to be a rather weak ground on which to justify increasing Canada's output of domestically trained physicians.

Nevertheless, recent projections of medical school graduates from 1970 to 1981 suggest that output will rise by 45 per cent over that period, from 1019 graduates in 1970 to 1480 in 1981.[4] We do not have corresponding projections for immigration, retirement and deaths of physicians over this period, but since recent net additions to the physician stock down to 1969 have been running about 1000 per year, it seems safe to conclude that the physician stock will grow at an average rate of over three per cent per year throughout the 1970s, and may reach four per cent. On the other hand population growth rates continue downward, and the crude rate of natural increase for the first five months of 1972 (annualized) is a mere 0.8 per cent per year. Immigration may add another 0.4 per cent to this, but it is clear that *if present trends continue* we will be observing increases of two to three per cent per year in physician stock per capita during the whole decade of the 1970s. It follows that, if physicians are able to maintain their relative income status, then costs of physician services per capita will rise two to three per cent faster than wages and salaries in the economy generally. Part of this difference will be reflected in increased workload (either reduction in shortage or increase in "overdoctoring") and part in increased prices (either listed or price drift). But it is safe to predict that expansion in the physician stock due to training facilities already in place or projected, will place steady upward pressure on physician prices (relative to the rest of the economy) throughout the next decade (at least). And the present structure of the medical service market provides no way of moderating this pressure.

---

[4] R. Nelson-Jones and D. G. Fish, "Projections of Graduates from Canadian Medical Schools", *Canadian Medical Association Journal,* Vol. 102 (April 25, 1970).

PCO LIC/CIB BCP
048521

HD4901/.R1/E92

Price formation in the market for dhyc
physician services in Canada,

c. 1 pco pco