Environment Canada
Environnement Canada

National Water Research Institute
Institut National de Recherche sur les Eaux

A STRESS ANALYSIS OF TRANSMISSOMETER WINDOWS

by

H.A. Savile

Inland Waters Directorate
Direction Générale des Eaux Intérieures

Savile (5)

ES-545

A STRESS ANALYSIS OF TRANSMISSOMETER WINDOWS

by

H.A. Savile

Engineering Services Section
Hydraulics Division
National Water Research Institute
Canada Centre for Inland Waters
Burlington, Ontario, Canada

March 1983

ABSTRACT

Spalling of glass pressure windows on the in-situ transmissometers at CCIW has occurred. A detailed stress analysis has been undertaken of the window and its supporting structure.

Several changes in design are recommended.

RÉSUMÉ

On a noté au CCEI que des fenêtres sous pression en verre de transmissiomètres s'effrittaient. On a donc entrepris une analyse détaillée des tensions qui s'exercent sur les fenêtres et leurs cadres.

Plusieurs changements conceptuels sont recommandés.

TABLE OF CONTENTS

1.0 INTRODUCTION

The shipboard transmissometers were modified to give them a multiband capability and to increase their depth capability from 50 m to 250 m. The greater depth capability was achieved in part by increasing the thickness of the transmitter/receiver window from 9.5 mm to 22 mm. The diameter of the window was not altered and since bending stress varies directly with pressure and inversely as the square of the thickness, no further stress analysis was deemed necessary.

In 1981, it was found that spalling was occurring at the outer corners of the glass and that the "O" ring groove had insufficient width to allow the ring to compress fully. The "O" ring was therefore acting as a fulcrum and loading the outer corners of the glass against the retaining ring. The grooves were enlarged to the recommended size and the units were pressure tested to design depth without problems.

In 1982 service, however, further spalling on the inner corners and an internal crack occurred on one of the windows. Observation of the damaged pieces showed extensive spalling around the circumference and a line of etched pits in the glass around the inner edge of the retaining ring.

2.0 DISCUSSION

The original transmissometer window installation was as in Figure 1 and 1a, where the retaining ring had exactly the same internal height as the thickness of the glass. The "O" ring, however, overfilled the groove and could not be compressed flush with the surface of the bulkhead. This caused the window to be cantilevered and to be subjected to very high edge loading by the retaining ring as it was tightened down. The water pressure caused even higher loads as it deformed the glass into a dished shape. The "O" ring groove was therefore widened to accommodate the "O" rings volume and now allows the window to contact the aluminum bulkhead as in Figure 1b when under no external pressure.

A detailed stress analysis showed, however, that the aluminum

bulkhead was bowing inwards considerably more than the glass was when under hydrostatic loading. This caused edge loading on the glass as per Figure 1c.

To establish the various deformations and stresses, a number of simplifying assumptions were made as follows:

1. The eccentric location of the window was changed to a central position.
2. The effects of the two holes in the bulkhead were modeled by one hole of the same total area.
3. Apart from boundary conditions on the edge loading calculations, the effects of the anodized coating on the bulkhead were neglected.
4. The "O" ring and groove were eliminated from the model.
5. The effects of the retaining ring were neglected.
6. The edge loading force profile was assumed to be triangular.
7. The deflection of the bulkhead was considered as a uniform pressure load effect plus a circular ring load caused by the glass.

Most of these assumptions would still have been made even if a finite element stress analysis had been available, but in its absence these assumptions were vital. None of those simplifications are likely to produce changes in excess of ±10%, however.

From various sources it was possible to establish the following parameters for the materials in question:

Glass:

Modulus of elasticity, $E_g = 78.2 \times 10^3$ MPa

Coefficient of thermal expansion, $\gamma_g = 740 \times 10^{-6} \frac{mm}{mm\ °C}$

Poissons ratio, $\nu_g = .207$

Maximum allowable tensile stress, $\sigma_{max\ t} = 6.89$ MPa

Aluminum

Modulus of elasticity, $E_a = 71.7 \times 10^3$ MPa

Coefficient of thermal expansion, $\gamma_a = 22.5 \times 10^{-6} \frac{mm}{mm\ °C}$

Poissons ratio, $\nu_a = .30$

Aluminum Oxide

Modulus of elasticity, E_{ao} 690×10^3 MPa

The dimensions of the model are as follows:

Diameter of glass window = 88 mm = $2\ a_g$

Thickness of glass window = 22 mm = t_g

Outer diameter of aluminum bulkhead = 203 mm = $2\ a_a$

Inside diameter of aluminum bulkhead = 38 mm = $2\ b_a$

Thickness of aluminum bulkhead = 25mm = t_a

Therefore, a_g = 44 mm, t_g = 22 mm, a_a = 101.5 mm, b_a = 19 mm and t_a = 25 mm.

From Roark (1) the applicable formulae are as follows:

For the glass window loaded by uniform hydrostatic pressure, q, and simply supported at the edges Table 24 case 10a applies with $r_o = 0$, $y_a = 0$, $m_{ra} = 0$

Therefore, y_c = central displacement $= \dfrac{q\ a^4\ (5 + V)}{64\ D\ (1 + V)}$

where D = plate constant $\dfrac{Et^3}{12\ (1 - V^2)}$

and for 250 m depth, $q = 2.45 \times 10^6$ Pa

M_c = the moment induced at the center $= \dfrac{q\ a^3\ (3 + V)}{16}$

and σ = resulting tensile stress $= \dfrac{6\ M_c}{t^2}$

θ_a = the edge angle $= \dfrac{q\ a^3}{8D\ (1 + V)}$

Q_a = shear force/unit circumference $= -\dfrac{q_a}{2}$

$$M_t = \text{unit tangential bending moment} = \frac{\theta D (1 - \nu_2)}{r}$$

In the case of the aluminum, we must sum all moments, stresses, deflections and angles resulting from the annular load exerted by the glass and the uniform load exerted by the glass and the uniform load exerted by the water.

The former case is covered by Table 24 case 1a, where $M_{rb} = 0$, $Q_b = 0$, $Y_a = 0$, $M_{ra} = 0$, $y_b = \frac{-w\ a^3}{D}\left(\frac{C_1 L_9}{C_7} - L_3\right)$, where w = load/unit circumference and $C_1 = 1.1$, $C_7 = 2.34$, $L_9 = .30$, $L_3 = .02$ in this case.

$$\theta_{ro} = \text{angle of the aluminum at the edge of the glass} = \theta_b F_4$$

where $F_4 = 1.1$ and $\theta_b = \frac{w\ a^2}{D\ G_7} L_9$

in the second case covered by Table 24, case 2a

$$M_{rb} = 0,\ Q_b = 0,\ y_a = 0,\ M_{ra} = 0$$

$$y_b = -\frac{q\ a^4}{D}\left(\frac{C_1 L_{17}}{C_7} - L_{11}\right)$$

where $C_1 = 1.1$, $L_{17} = .14$, $C_7 = 2.34$, $L_{11} = -.003$

$$\theta_{ro} = \theta_b F_4 - q\frac{r^2\ G_{14}}{D} + \frac{M_{rb}\ r_o F_5}{D} + \frac{Q_b\ r^2\ F_6}{D} = \theta_b F_4$$

$$\theta_b = \frac{q\ a^3\ L_{17}}{D\ C_7}$$

These equations when solved, give direct loads in the glass, the angle at which the glass meets the aluminum and the distance between the glass and the aluminum at the center. There is, however, no direct solution for the stresses due to the edge loads in the glass nor to the width of the contact.

By making some assumptions, however, an upper approximation and a lower bound for the stress and the contact width can be determined.

For the lower bound case, we assume that the loading diagram is triangular, that the anodized surface, Al_2O_3, has no effect, and that deflections in the glass and aluminum are proportional to the ratios of their modulii of elasticity, then we can solve two equations in two unknowns for both the maximum stress and the loaded width.

For the upper approximation, we assume that the anodizing spreads the load sufficiently, due to its high E, that we can neglect any movement of the anodizing and the aluminum.

This means that all the deflection occurs in the glass and a similar set of equations can be solved.

Solving for the lower bound gives a compressive stress, σ_{max}, equal to 23.76 MPa with a contact width of 3.56 mm, and solving for the higher approximation gives a compressive stress, σ_{max}, of 33.87 MPa and a contact width of 2.79 mm. Solving the other equations gives a glass to aluminum angle at the contact point of, $\Delta\theta = 1.92 \times 10^{-3}$ radians, a radial compressive stress of $\sigma = q = 2.45$ MPa, a shear stress normal to the surface $\tau_{max} = 2.52$ MPa, a tangential tensile stress, $\sigma_t = 5.96$ MPa. This latter is getting very close to the recommended ultimate limit of 6.89 MPa for polished glass surfaces, which this is not, and in conjunction with the high compressive loads gives no factor of safety.

The tensile stress at the center of the window of 12.08 MPa is exceeding the recommended limit by nearly a factor of two and probably the only reason that cracking has not happened is that the glass is polished here.

Addressing the subject of thermal stress, two conditions are subject to analysis. The first is a steady state heat flow through the thickness of the glass. Roark Table 24, case 15a gives a solution

$$M_c = \frac{\gamma D(1+U) \ \Delta T \ (1-L_8)}{t}$$

and

$$M = \frac{\theta D(1-\nu^2)}{r} + \nu M_r - \frac{\gamma(1-\nu^2) \ \Delta T D}{t} \langle r - r_o \rangle^o$$

which in this case = 0

allowing a maximum $\Delta T = 20°C$

and solving $\sigma_c = \frac{6M_c}{t^2} = 2.84$ MPa tensile stress.

The second case is the direct thermal shock stresses caused by either plunging the warm glass into cold water or traversing a thermocline at depth. Assuming a ΔT of 20°C for the first case the tensile stress at the skin $\sigma_{\Delta T} = \frac{\Delta T \gamma E}{1 - \nu} \doteq 14.55$ MPa or in excess of twice the recommended value.

A thermal shock from passing through a thermocline at depth would be less but while descending the loads are additive to those caused by pressure. The combination of thermal and pressure effects are certainly sufficient to cause the spalling and cracking which has occurred.

A similar analysis has been performed for a 25 mm thick acrylic window which shows that it will deflect and remain in contact with the aluminum across the full area due to its lower E, 3.4×10^3 MPa, with consequent reduction in stress levels due to being nearly fully supported. Maximum shear stress is only .629 MPa for example.

Therefore, the major force will be the shear over the unsupported holes. Using a 10 mm thick window and assuming that shear strength equals one-half of tensile strength gives a shear strength of 36.2 MPa. Given a 25.4 mm diameter hole, the shear stress $\tau = \frac{F}{A} = \frac{PD}{4t} = 4.59$ MPa for a 6.89 Mpa applied pressure, giving a safety factor of 7.88:1. At a pressure of 2.4 MPa, the stress is 1.63 MPa, giving a safety factor of 22.16.

A proof test was carried out to test a window of this thickness which involved the building of a test jig and hydraulically loading the window. Proof pressure of 7 MPa was applied for 500 cycles and then held for 150 hours. The only effect was a small amount of creep at the openings in the plate. Super abrasion resistant Lucite is now available with a

scratch resistance approaching that of glass and a sheet has now been purchased and the transmissometers fitted with such windows for the 1983 field season.

3.0 RECOMMENDATIONS

Several ways of improving the window are possible but from a mechanical viewpoint they can be ranked as follows:

1. Redesign the window in acrylic material, preferably one of the scratch resistant grades provided that the resultant curvature does not degrade the optical system too much. This has been done as a test for the 1983 field season.
2. Use tempered and polished borosilicate glass in a plastic support to allow the load to be spread over a wider area. Striae and bubbles in the glass will have to be minimal to avoid optical degradation.
3. Polish and round the sides and corners of the existing optical glass and mount in a plastic support. Possibly chemically temper the glass. Merely thickening the glass will only worsen the situation.

4.0 REFERENCES

1. Roark, R.J. and Young, W.C. Formulas for Stress and Strain, Fifth Edition. McGraw-Hill, 1975.

Figure 1 Layout of Bulkhead and Window

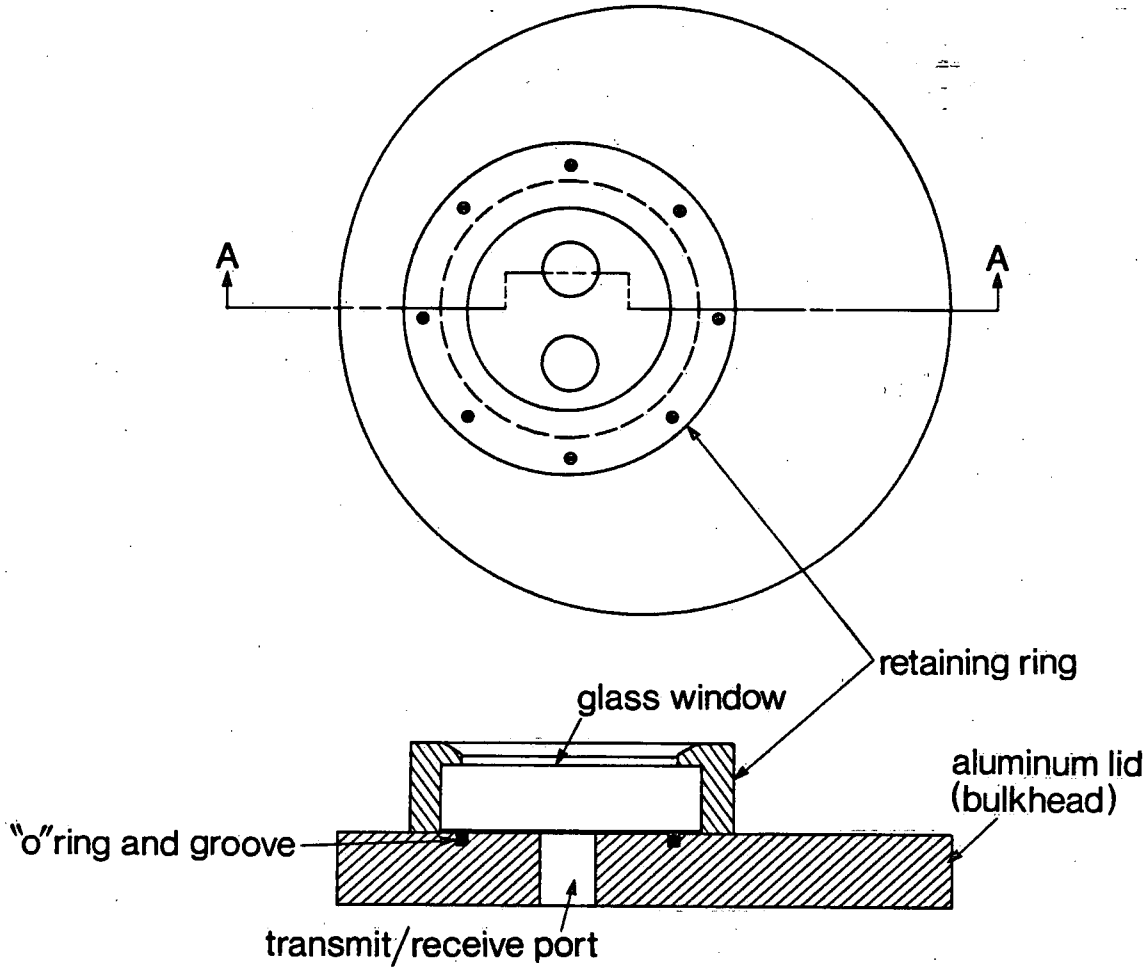

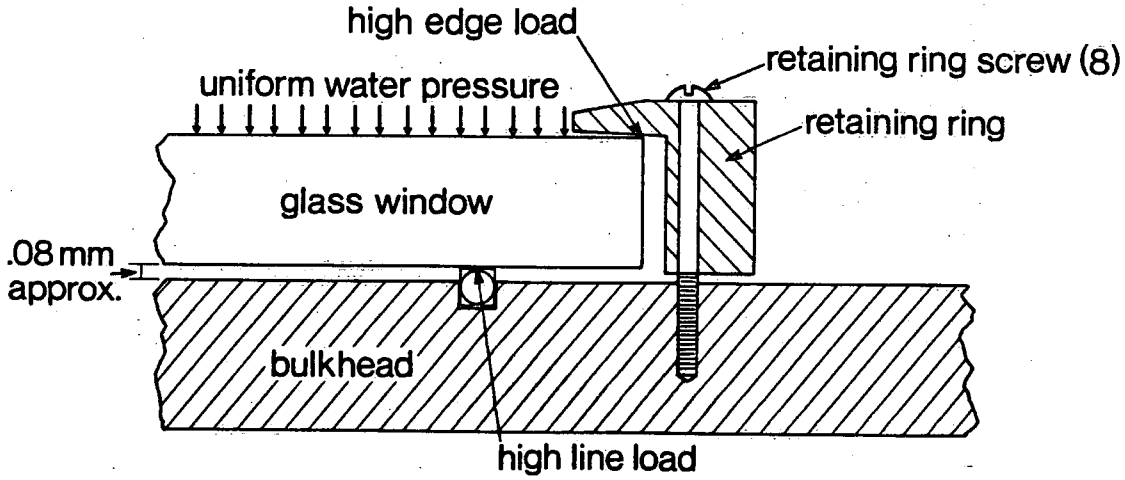

Figure 1a Detail of Original Window Edge

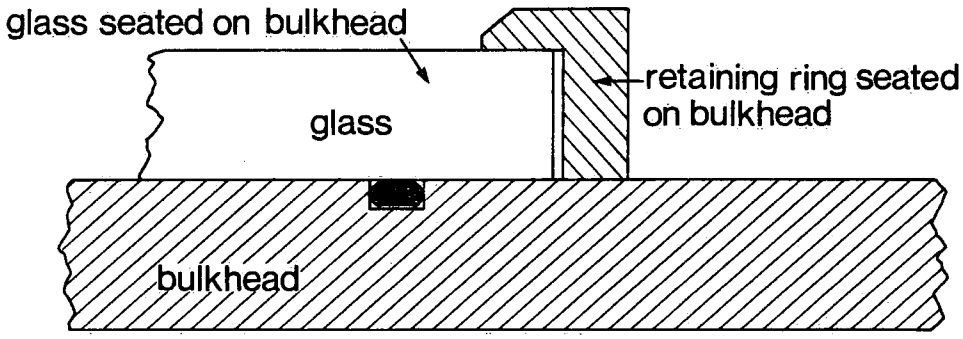

Figure 1b

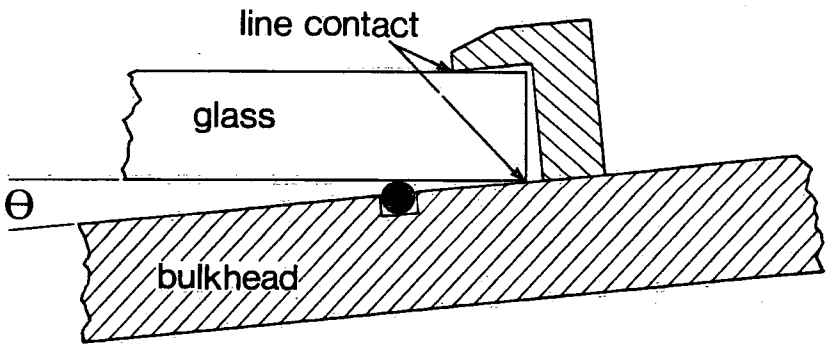

Figure 1c

16044