WIND/WAVE FLUME
OPERATING MANUAL

by

T. W. Nudds

Technical Services Section
Hydraulics Division
National Water Research Institute
Canada Centre for Inland Waters
September, 1979

TABLE OF CONTENTS

1.0 LIST OF ILLUSTRATIONS

2.0 INTRODUCTION

2.1 General Preamble

2.1.1 This manual is meant to be used by those who have a basic understanding of the Hydraulics Laboratory area. There will be no attempt to explain the theory of operation of the various facilities except where this is necessary to aid in the operation of the particular device. The same is true for maintenance. Troubleshooting and repair are not covered at all in this manual. Following this manual carefully will enable most technicians and scientists to operate the various facilities to the point where meaningful data can be acquired.

2.1.2 There are two basic references in the Wind/Wave Flume. The first is a datum line (see Figure 1) located at the junction of the flume tunnel and the beach area. This line is drawn on the floor of the flume and is used as a reference to help locate points and devices installed in both the tunnel and beach area. The second of these basic references is the bench mark (see Figure 1). It is located in the centre of the tunnel, 7.07 meters from the datum line. The bench mark is used as a zero reference indicating the floor of the wind/wave flume. All water depth measurements use the bench mark as the zero depth level.

2.1.3 For the purposes of this manual, the symbol "W/W" will be used to mean "wind/wave flume".

2.2 Description of Facilities

2.2.1 The W/W structure (Figure 2) consists of a tunnel section and a beach section. The tunnel is 83.5 meters long by 4.5 meters wide by 3.0 meters high. The east end of the tunnel houses the hydraulic waveboard while the west end leads to the beach area which is approximately 20 meters long by 14 meters wide by 5 meters high. The transition from the tunnel ceiling to the beach ceiling is a gradual slope over the 6.7 meters just before the observation area (see Figure 1), which is 9 meters of glass windows in both sides of the tunnel and is located just before the beach area, opposite the control room. The W/W control room contains the majority of the control equipment for the various facilities.

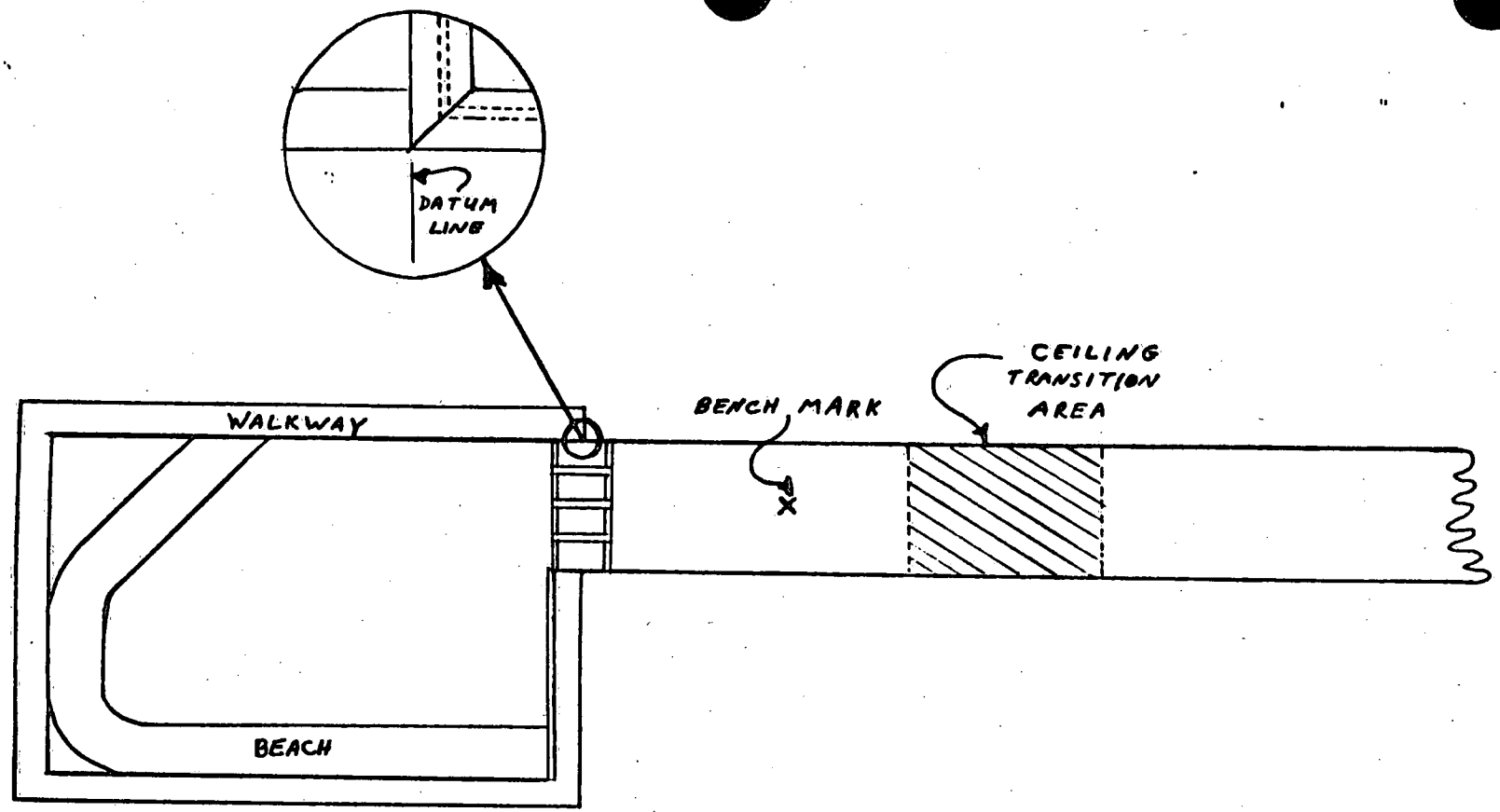

Figure 1: Basic References

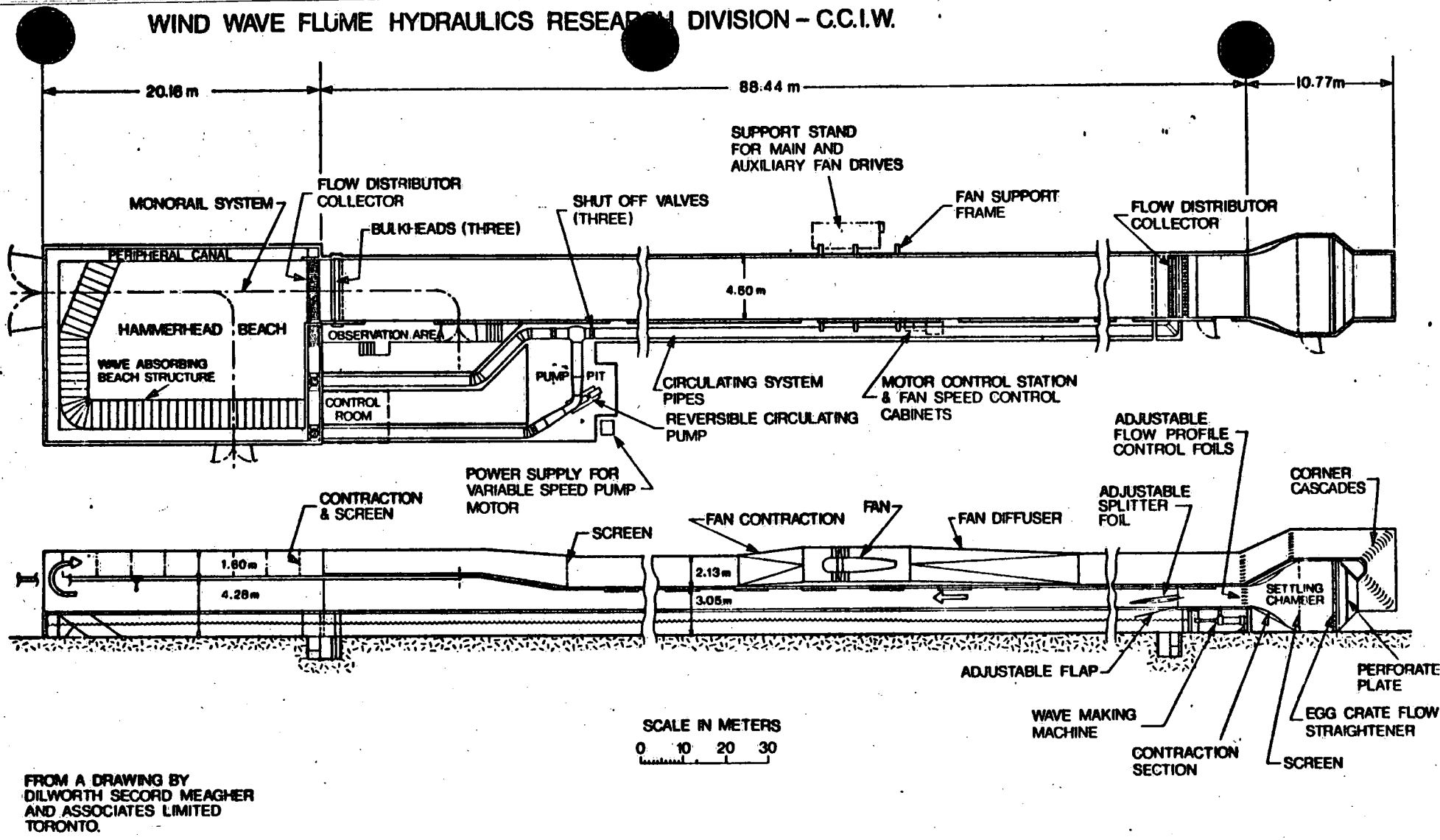

FROM A DRAWING BY DILWORTH SECORD MEAGHER AND ASSOCIATES LIMITED TORONTO.

FIGURE 2. THE WIND WAVE FLUME SHOWN IN PLAN AND SECTION IS A BOUNDARY LAYER WIND TUNNEL. THE CONTROLS FOR WAVE MACHINE, PUMP AND FAN WITH THE DATA COLLECTION AND PROCESSING EQUIPMENT ARE IN THE CONTROL ROOM.

2.2.2 The hydraulic waveboard (Figure 3) is capable of generating waves of up to 3HZ and has a stroke of $\pm$70 centimeters from its centre position. The hydraulic power supply for the waveboard is located externally and should not have to be touched for the daily operation of the system except to turn on the cooling water.

2.2.3 The recirculating wind tunnel of the W/W is located on top of the flume structure. Air is drawn up from the beach area and is returned to the tunnel above the waveboard. Flow is in one direction only; from waveboard to beach. The fan is capable of producing winds of up to 16 meters per second, dependent on water depth and fan speed.

2.2.4 The pump is located outside of the W/W control room in a pit which also contains the valves used for determining flow. The pump system is capable of producing flow either towards or from the waveboard as well as a circulating flow within the beach area. The volume of flow that the pump is capable of is a function of the water depth. Figure 2 shows the layout of the pumping system.

2.2.5 The computer used in conjunction with the W/W is located in the control room. Through a network of probes and cabling, the computer assists in the generation, measurement, and analysis of waves and other parameters necessary for the various experiments carried out in the W/W. Section 8.0 of this manual is a beginner's guide to the use of the computer. However, as the system is rather a complicated one, it is best to receive instruction in its use from an experienced operator.

2.2.6 There are facilities for two traversing mechanisms located on the side of the W/W. One is approximately thirty meters from the datum line and the other is sixty meters from datum. The mechanism is motorized and is capable of raising and lowering an air-foil type of support on which various measurement devices can be secured.

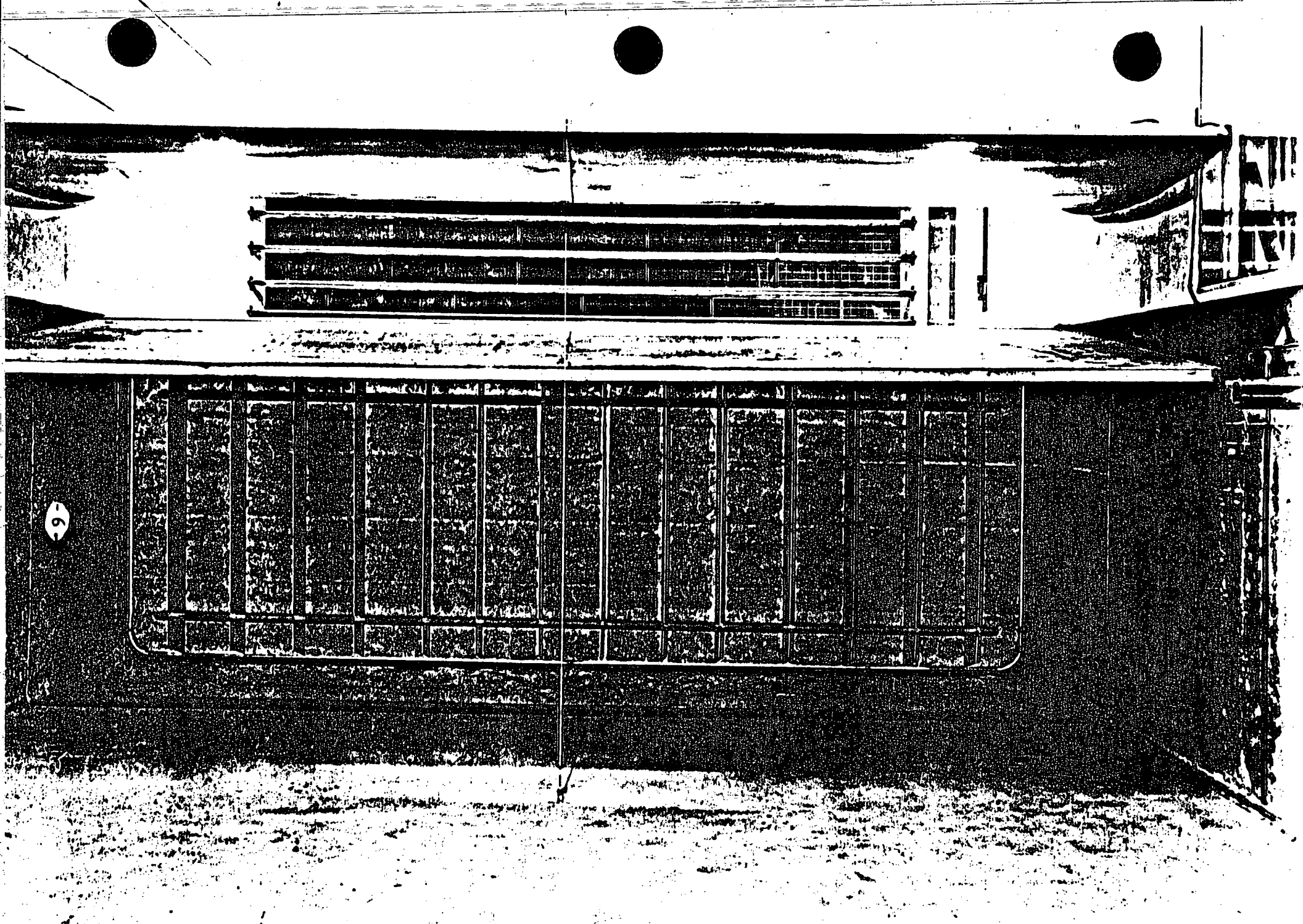

Figure 3: Waveboard

3.0 PRE-OPERATION

3.1 When operating any of the equipment in the W/W control room, the air conditioner should be turned on.

3.2 Before running, make sure the water level is at the proper level. The water depth is measured by means of a manometer located outside of the flume at the west end of the observation area. Zero of the manometer is at the same level as the bench mark.

3.3 Adding water to the flume is accomplished through four valves located along the length of the flume (Figure 4). Counterclockwise rotation opens the valves, and clockwise rotation closes it. With two to four valves open, the water depth will increase at approximately fifteen centimeters per hour.

3.4 Emptying the flume is done via eight drains located in the flume (Figure 4). Seven of these drains (excluding number 5) have hard stops to indicate open or close. Counterclockwise rotation opens the drains and clockwise rotation closes them. Drain number five is a continuous rotation valve. It is closed when you feel maximum resistance to the rotation of the crank.

3.5 Important: Whenever the flume is being drained, all the laboratory floor drains must be capped, to prevent flooding.

3.6 The TV camera system consists of a television monitor, three black and white television cameras and a switching box. The monitor is suspended in the W/W control room. The switching box is located on the table underneath the monitor. In the corner near the monitor is a small grey box labelled Monitors. The On/Off switch on this box controls the camera and the auxiliary lights located behind the waveboard. This camera is the only one which is permanently fixed. The other two cameras are free to be placed anywhere desired as long as the suitable cables are strung. The waveboard camera is plugged into channel one of the switching box.

3.7 The intercom system consists of a master station, located in the W/W control room, and a number of remote stations. Each remote station consists of a paging talk-back horn speaker and a voice call-in switch.

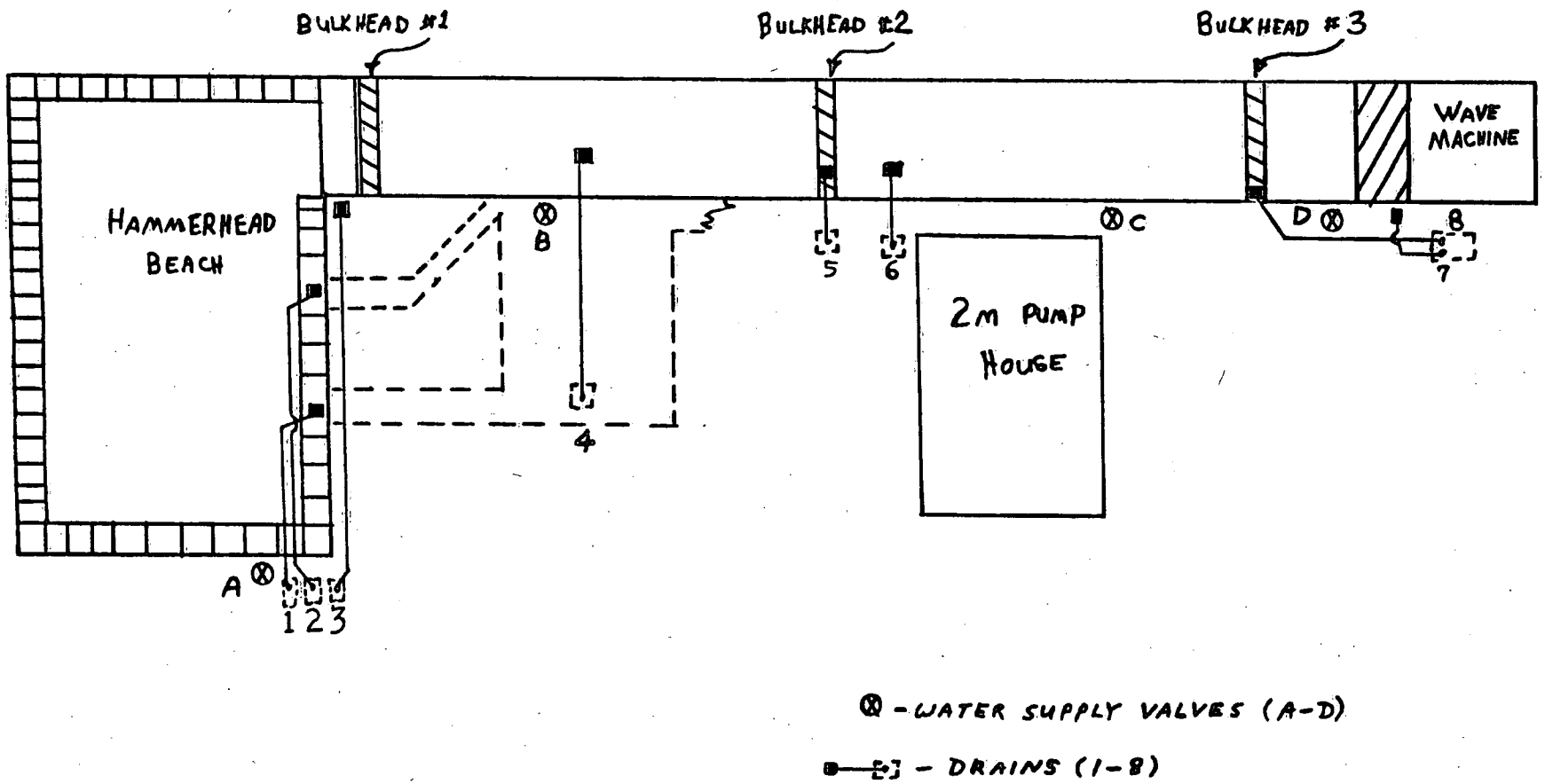

Figure 4: Water Supply Valves and Drains

The master station can be used to select any or all of the remote stations. The master is left turned on with both the Standby and Private buttons depressed. This permits any remote stations to call the master by using its call-in switch. When the Standby button is up, the master station listens to the selected remote stations as long as the Talk button is up. With the Talk button depressed, the master station can talk to the remotes. Locations of the remote stations at present are:

1. behind the waveboard
2. in the hammerhead beach
3. at the external south-west corner of the W/W.

Proposed future locations are:

4. at the remote Fan Control Panel
5. at the fan motor drive
6. at the MTS Hydraulic Power Supply
7. in the Electronics Lab.

4.0 WAVEBOARD OPERATION - REGULAR WAVES

4.1 Turn on TV camera, lights and intercom. Go down to the waveboard end of the W/W and turn on the hydraulic power supply cooling water. Pump up the waveboard seal to between 18 and 22 pounds using the bicycle pump located on the ledge outside of the waveboard room. This should be done on a daily basis as should the lubrication of the board guide rails. A can of Spray Lube A and a can of Silicone Spray are kept outside of the waveboard room. Once the rails have been wiped clean, a thin film of Spray Lube A should be applied to them. The can of Silicone Spray should be used on a weekly basis to lubricate the waveboard seal.

4.2 The waveboard control rack is located in the W/W control room. Turn on the Power switch on the MTS 436 Control Unit. Press the Limit Detect Reset button on the MTS 406 Controller. Press the Hydraulic Pressure-Low button on the Control Unit, wait five minutes, then press the Hydraulic Pressure-High button on the Control Unit. Make sure that the INT/RWS switch on the Control Unit is set to INT. Wait 15 minutes before attempting to move the waveboard.

4.3 Using the Set Point Potentiometer on the Controller, slowly move the waveboard back until it is in the mid-position of the stroke. When the trace of the oscilloscope, which is incorporated in the MTS control rack, is in the centre of the screen, the waveboard is then at the mid-position of the stroke. For this to be true, the Volts/Div dial of the oscilloscope should be set at 2 and the Seconds/Div dial should be set at .2 m.

4.4 Determine the required nitrogen pressure, to apply to the waveboard, for the particular water depth using the chart in Figure 5. Set the nitrogen pressure at the gas cylinder located near the MTS Hydraulic Power Supply.

4.5 To set the desired wave amplitude: Obtain the compensation factor by using the chart in Figure 6. Multiply the wave height in centimeters by the compensation factor, then divide by 100 to obtain the ram stroke. Divide the ram stroke by two to get the amplitude in centimeters which is set on the Span control of the Controller. Note: This is a ten turn potentiometer and one turn is equal to ten centimeters of waveboard amplitude.

To maximize performance capability, the precharge in the N_2 chamber of the Actuator must be at the correct level for the water depth. Refer to the curve below, or calculate the required pressure as follows:

$$p = 765 + \left(\frac{W \times \rho \times h^2}{22}\right)$$

where: p = required N_2 static pressure in psi

W = width of waveboard in inches

ρ = density factor (.036)

h = water depth in inches

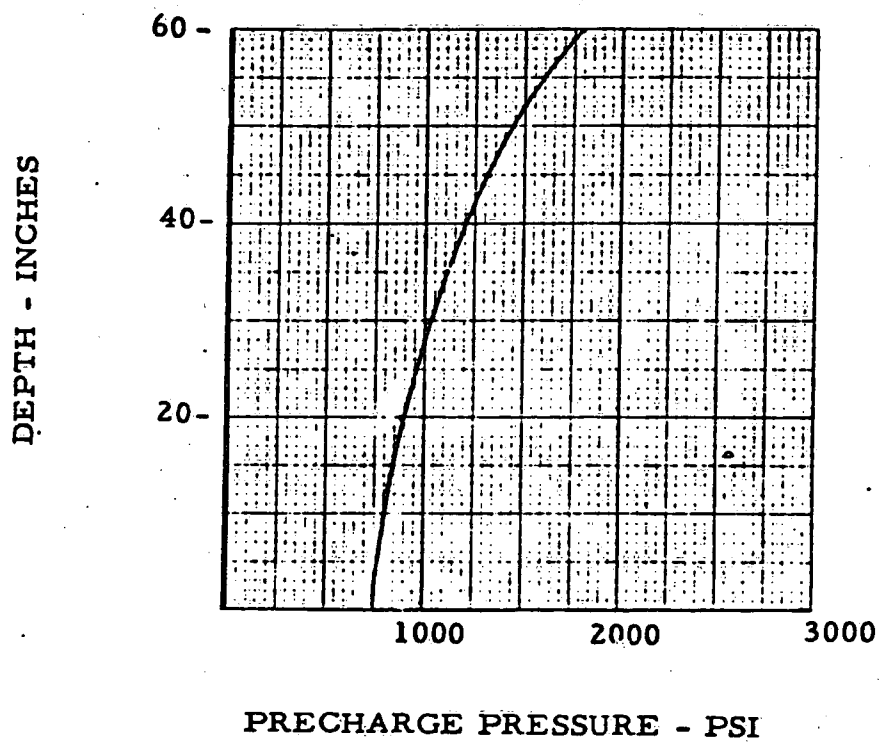

Figure 5: Nitrogen Pressure Chart

COMPENSA[illegible] FACTOR FOR WAVE GENERATOR (KEMPF & REMMER W20 OR [illegible]S A FUNCTION OF PERIOD (SECONDS) AND DEPTH OF W[illegible] (METER).

--MULTIPLY WAVE HEIGHT BY NUMBER A[illegible] DIVIDE BY 100 TO OBTAIN RAM STROKE--

LINKAGE SETTING: TOP= .100 METER, BOTTOM= .100 METER. (i.e. mech. gain of unity)

Note: Stroke = two times amplitude

PERIOD IN SECONDS

Depth, metres	.25	.50	.75	1.00	1.25	1.50	1.75	2.00	2.25	2.50	2.75	3.00	3.25	3.50	3.75	4.00	4.25	4.50	4.75	5.00	5.25	5.50	5.75	6.00	6.25
.025	65	147	226	309	388	465	539	609	673	730	861	937	1012	1085	1157	1225	1290	1353	1412	1467	1518	1566	1610	1650	1687
.050	51	99	157	213	266	329	384	439	493	545	594	641	685	725	831	886	940	993	1045	1097	1147	1196	1244	1290	1334
.075	50	77	125	172	217	261	313	358	404	448	492	535	576	615	652	687	720	815	859	904	948	991	1034	1076	1118
.100	50	65	105	147	187	226	264	309	349	388	427	466	503	540	575	610	642	673	703	730	823	862	900	938	976
.125	50	58	93	130	166	202	236	269	311	347	382	417	451	485	519	551	583	613	642	670	697	722	807	841	876
.150	50	55	83	117	150	183	215	246	276	316	348	381	412	444	475	506	536	565	593	621	647	672	697	720	741
.175	50	52	75	106	138	169	199	228	256	292	322	352	382	411	440	469	498	526	553	580	605	630	655	678	700
.200	50	51	70	99	128	157	185	213	240	266	301	329	357	385	412	439	466	493	519	545	570	595	618	641	664
.225	50	51	65	92	119	147	174	200	226	251	276	309	336	362	388	414	440	466	491	516	540	564	587	610	632
.250	50	50	62	86	112	138	164	190	214	239	262	293	318	343	368	393	418	442	466	490	514	537	560	582	603
.275	50	50	59	82	106	131	156	180	204	227	250	272	303	327	351	375	398	422	445	468	491	513	535	557	578
.300	50	50	57	77	101	125	149	172	195	218	240	261	290	313	336	359	381	404	426	448	470	492	514	535	556
.325	50	50	55	74	97	119	142	165	187	209	230	251	271	300	322	344	366	388	410	431	452	473	494	515	535
.350	50	50	54	70	93	113	136	158	180	201	222	242	262	289	310	331	353	374	395	415	436	457	477	497	517
.375	50	50	53	68	88	109	131	152	173	194	214	234	253	272	299	320	340	361	381	401	421	441	461	481	500
.400	50	50	52	65	85	105	126	147	167	187	207	226	245	264	290	310	329	349	369	389	408	427	447	466	485
.425	50	50	52	63	82	102	122	142	162	181	200	219	238	256	274	300	319	339	358	377	396	415	433	452	471
.450	50	50	51	61	79	99	118	138	157	176	195	213	231	249	266	291	310	329	347	366	385	403	421	440	458
.475	50	50	51	60	77	96	114	133	152	171	189	207	225	242	259	276	302	320	338	356	374	392	410	428	446
.500	50	50	51	58	74	93	110	130	148	166	184	202	219	236	253	269	294	312	329	347	365	382	400	417	434
.525	50	50	50	57	72	90	108	126	144	162	179	197	214	231	247	263	279	304	321	338	356	373	390	407	424
.550	50	50	50	56	70	87	105	123	140	158	175	192	209	225	241	257	273	297	314	331	347	364	381	398	414
.575	50	50	50	55	69	85	102	120	137	154	171	187	204	220	236	252	267	290	306	323	340	356	373	389	405
.600	50	50	50	55	67	83	100	117	134	150	167	183	199	215	231	246	261	276	300	316	332	348	365	381	397
.625	50	50	50	54	65	81	98	113	130	147	163	179	195	211	226	241	256	271	294	310	325	341	357	373	389
.650	50	50	50	53	64	79	96	111	128	144	160	176	191	207	222	237	251	266	288	303	319	335	350	366	381
.675	50	50	50	53	63	77	94	108	125	141	156	172	187	203	218	232	247	261	275	297	313	328	343	359	374
.700	50	50	50	52	62	75	91	106	122	138	153	169	184	199	214	228	242	256	270	292	307	322	337	352	367
.725	50	50	50	52	61	74	89	104	120	135	150	165	180	195	210	224	238	252	266	287	302	316	331	346	360
.750	50	50	50	52	60	73	87	102	118	133	148	162	177	192	206	220	234	248	261	275	296	311	325	340	354
.775	50	50	50	51	59	71	86	101	114	130	145	160	174	188	203	217	230	244	257	270	291	306	320	334	348
.800	50	50	50	51	58	70	84	99	112	128	142	157	171	185	199	213	227	240	253	266	287	301	315	329	343
.825	50	50	50	51	57	69	83	97	111	126	140	154	168	182	196	210	223	236	250	262	275	296	310	324	337
.850	50	50	50	51	56	68	81	95	109	123	138	152	166	179	193	206	220	233	246	259	271	291	305	319	332
.875	50	50	50	51	56	66	80	94	107	121	135	149	163	177	190	203	217	230	242	255	267	287	301	314	327
.900	50	50	50	51	55	65	78	92	105	119	133	147	160	174	187	200	213	226	239	251	264	276	296	310	323
.925	50	50	50	50	55	64	77	90	103	118	131	145	158	171	185	198	210	223	236	248	260	272	292	305	318
.950	50	50	50	50	54	63	76	89	102	115	129	143	156	169	182	195	208	220	233	245	257	269	288	301	314
.975	50	50	50	50	54	63	74	88	101	113	127	140	154	167	179	192	205	217	230	242	254	265	277	297	310
1.000	50	50	50	50	53	62	73	86	100	112	125	139	151	164	177	190	202	214	227	239	250	262	274	293	306
1.025	50	50	50	50	53	61	72	85	98	110	124	137	149	162	175	187	199	212	224	236	247	259	270	289	302
1.050	50	50	50	50	53	60	71	84	97	109	122	135	147	160	172	185	197	209	221	233	245	256	267	278	298
1.075	50	50	50	50	53	60	70	83	96	107	120	133	145	158	170	182	195	207	218	230	242	253	264	275	295
1.100	50	50	50	50	52	59	69	82	94	106	119	131	144	156	168	180	192	204	216	227	239	250	261	272	291
1.125	50	50	50	50	52	58	69	80	93	105	117	130	142	154	166	178	190	202	213	225	236	247	258	269	288

Figure 6: Compensation Factor Chart

4.6 Set the desired wave-form and frequency on the built-in Function Generator in the Control Unit. The sinusoidal wave form is almost always used, though triangular and square waves are available. If a continuous train of waves is desired, put the Count Input of the Control Unit to Off and press the red reset button. If only a certain number of waves is desired, set the Count Input to Program, press the Pre-setting button and set the required number of waves. At the end of each sequence, the reset must be pressed in order to uninhibit the controls for another series. Switch the Soft Run/Stop switch to In.

4.7 To activate the waves, press the Program-Run button on the Control Unit. If you are using a set number of waves, the Program-Stop will be activated after the prerequisite number of waves have been generated. If you are using a continuous series of waves, it is necessary to press the Program-Stop in order to terminate the waves.

4.8 To shut down the waveboard: press the Program-Stop; park the waveboard in the forward position using the Set Point; press Hydraulic Pressure-Low, then Hydraulic Pressure-Off; turn off Power switch, then the cooling water to the Hydraulic Power Supply; finally, turn off the television camera, lights, intercom.

IMPORTANT: Do NOT shut off the hydraulic pressure unless the waveboard is parked in the forward position or the waveboard will be damaged.

5.0 WAVEBOARD OPERATION - RANDOM WAVES

5.1 Follow the same procedure used for setting up the waveboard for regular waves up to and including section 4.4, with the exception that the INT/RWS switch on the Control Unit should be set to RWS.

5.2 Connect a BNC cable from the output of the Random Wave Synthesizer to the Program BNC input on the front panel of the Controller. At this point, the Span potentiometer on the Controller should be at zero and the output knob of the Synthesizer should be set to Clear.

5.3 With the Random Wave Synthesizer set up (see the Operating Manual for Generating Random Waves Using the Random Wave Synthesizer by M. G. Skafel), turn the output knob of the Synthesizer to Run. Slowly turn the Span control to maximum.

5.4 To shut down: turn the Span to zero, set the Synthesizer to Clear, then follow sections 4.8 and 4.9 of this manual.

6.0 FAN OPERATION

6.1 All doors of the W/W must be closed.

6.2 Midway along the side of the W/W are the power control panels for the fan. A total of five circuit breakers must be engaged to supply power to the control panel; four breakers on the first panel from the left and one on the second panel from the left. When these are engaged, the red indicator lights on the control panels should be lit.
Note: The first power control panel should always be locked. There is a key for the control panel which has to be engaged before the fan can be run. This key is kept in the drawer of the MTS system control rack in the W/W control room.

6.3 Each time the main fan motor is to be started, the boiler plant (extension 542) has to be notified.

6.4 Decide which motor you require: main motor goes up to 873 rpm; auxiliary motor goes up to 87 rpm. Press the Motor Run button, wait 15 seconds, then press the Clutch Run. Using the Run Speed control, set the fan speed to what you desire, using either the readout on the Control Dial (% of full speed) or the fan speed digital readout (rpm.).

6.5 To shut down, reduce the fan rpm to zero using the Run Speed control. Press the Clutch Stop button, then the Motor Stop, and finally remove the Remote Lockout Key. If only the auxiliary motor has been used, the power panels may be shut down immediately. However, if the main motor was used, it will be necessary to wait five minutes before shutting off the main power control panels on the side of the W/W.

6.6 If the auxiliary motor was in use and you wished to go to the main motor, you may do so immediately. However, if you wished to go from the main motor to the auxiliary, there must be a waiting period of five minutes due to a blower controlled lock-out relay which inhibits direct change from the main to the auxiliary motor.
There are two operational control panels for the fan; one is located inside the W/W control room, and the other is located beside the main power control panels on the side of the W/W. The same lockout key works in both panels.

6.8 Do not run at 700 rpm as this is the resonant frequency of the fan.

6.9 There is no standard procedure for wind measurement. Both cup anemometers and pitot tubes have been used. Considerable data on wind measurement will be found in the report, "Wind Velocity Profiles in the Wind/Wave Flume" by Paul W. Szczucinski.

7.0 PUMP OPERATION

7.1 Before turning on the pump, open or close the three valves located in the pump pit (see Figure 2); open or seal the distributor as required (see Figure 7); install or remove the drop gates as required (see Figure 7). There are six drop gates located around the catwalk of the hammerhead beach. These gates are sheets of steel which, when installed, inhibit the flow of water. When removed, the water flows freely past the point of the drop gate.

7.1.1 Path #1 is basically a flow of water in the tunnel section of the W/W. Valves #1 and #3 are open while #2 is closed. The flow of water, within the W/W, is between the distributor plate in front of the waveboard and the distributor plate at the end of the tunnel before the beach area. Flow can be either towards or away from the waveboard. Drop gates #1 and #2 must be removed and drop gates #3, #4, #5 and #6 must be installed.

7.1.2 Path #2 is an extension of path #1 and includes the hammerhead beach area. Valve #2 is closed; valves #1 and #3 are open. The distributor plate at the beach end of the tunnel section is sealed for this flow path. Flow can be either towards or away from the waveboard. Drop gates #3 and #4 must be removed; while drop gates #1, #2, #5 and #6 must be installed.

7.1.3 Path #3 is basically a flow within the beach area. Valve #1 is closed; valves #2 and #3 are open. For the main flow path, the distributor is open; drop gates #1, #3 and #4 are removed; drop gates#2, #5 and #6 are installed. For the modified flow path, which is used to achieve a cross-flow in the beach area, the distributor must be sealed. Drop gates #1, #3 and #6 are removed and drop gates #2, #4 and #5 are installed. Flow, for either the main or the modified path, can be clockwise or counterclockwise.

7.2 Turn on the main power switch on the ST6 Solid State Drive Power Supply, located at the corner of the pump pit and wave basin. In the control room, set the FWD/REV switch for determining the direction of flow within the W/W. Set the switch to REV for a waveboard to beach flow, and FWD for a beach to waveboard flow.

7.3 Turn on the digital tachometer. Press the Start button. Using the Speed Set control (% of full speed), set the desired speed of the pump, either by percentage of full speed or by rpm, utilizing the digital tachometer.

7.4 To stop the pump: reduce the speed to the zero setting of the Speed Set control; press the Stop button; turn off the digital tachometer; turn off the main power supply switch.

7.5 When using the pump, listen carefully for any sound of cavitation. If this occurs, reduce the speed of the pump immediately and, if necessary, shut down.

7.6 The measurement of water flow is accomplished through the use of two differential pressure transducers (section 10.2) in conjunction with two transducer indicators (Appendix 12A).

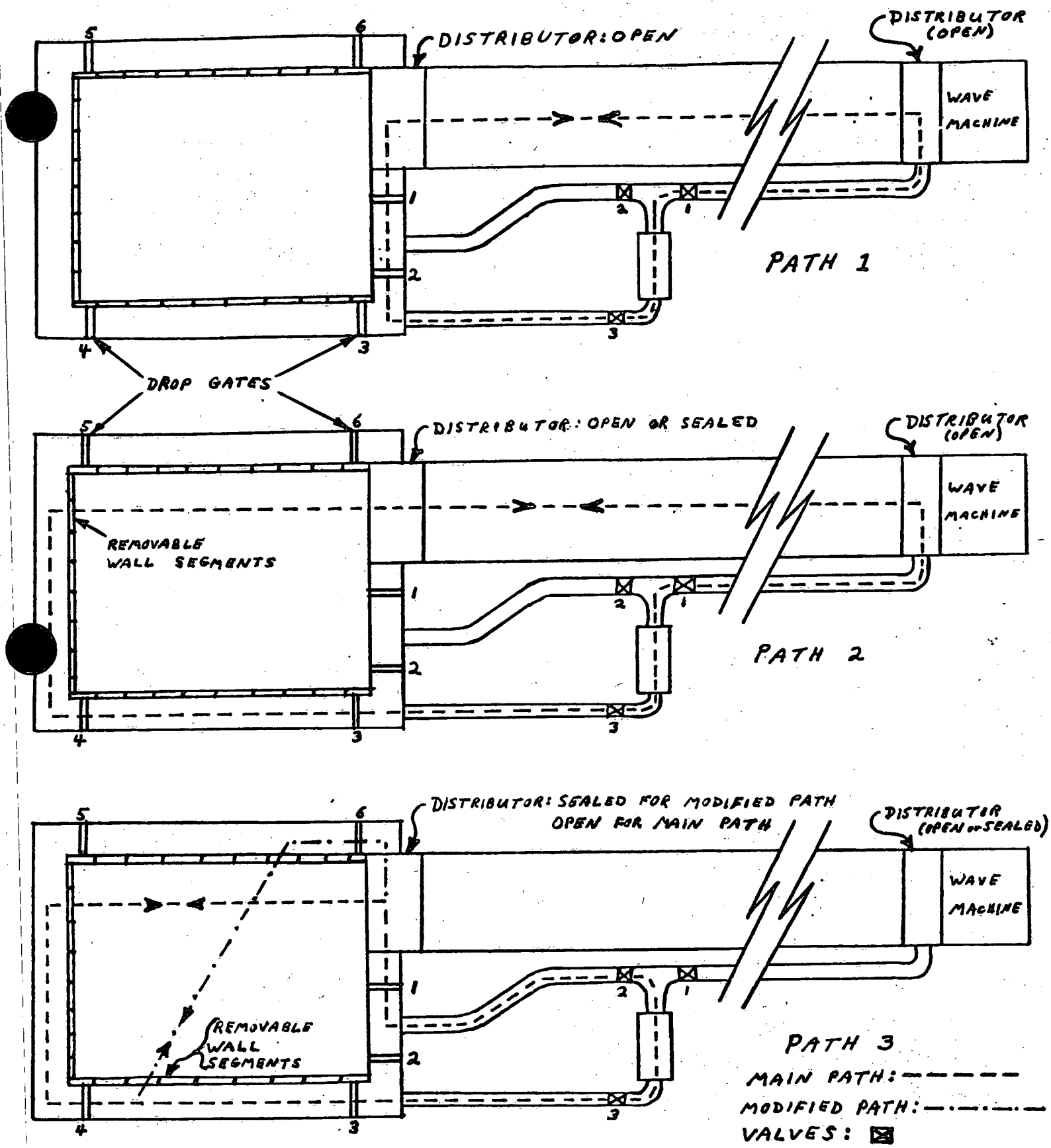

Figure 7. Pump Circulation Paths

8.0 COMPUTER OPERATION

8.1 The computer is located in the W/W control room and is a Digital Equipment Corporation (DEC) PDP-11/40.

8.2 Turn on the power switches for the computer, the keyboard terminal and the hard copy unit. Insert the System Disk into the disk drive unit #0. Insert the desired user disk into the disk drive unit #1. Press the run switches on the fronts of both disk drives. When the Ready light comes on, press the Halt switch which is on the main panel of the computer. Also on this panel is a series of 18 switches which operate in a digital fashion: up is 1, down is 0. The number 173100 should be entered onto these keys, in octal. Press the Load Address switch. Change the Enable/Halt switch to Enable. Enter the number 177406, in octal, onto the series of 18 switches. Press the Start switch. The display screen of the terminal should read - RT-11SJ V02C-02E.

Type in the data in the following format -

```
DAT   04-APR-79
```

Press the Return key, then type in -

```
R   ADF4M
```

Press the Return key; the following should appear -

```
BASIC   V01B-02C
*
```

Type the letter A, then the Return key, to get -

```
USER FNS LOADED
READY
```

The computer is now ready to operate.

8.3 Decide which program you wish to use. In this example, we will use BREAK. Type in OLD, press Return, to get -

```
OLD FILE NAME - -
```

Type in DK1:BREAK, press Return, to get -

```
READY
```

Type in Run and press Return. The program BREAK will commence to operate. Figure 8(a) is a sample of the terminal display up to the point of being ready to run the program BREAK. Figure 8(b) is a

```
RT-11SJ     V02C-02E
.DAT 13-APR-78
.R ADF4M
BASIC V01B-02C
*A

USER FNS LOADED

READY

OLD
OLD FILE NAME--DK1:BREAK

READY

RUN
```

Figure 8 (a): Computer Display - Turning System On

```
BREAK    13-APR-78  BASIC V01B-02C

NO OF SCANS (MULT. OF 256)=?256
DELTA T?.05
TYPE Y TO ENTER CAL?Y
1 VOLT=
PROBE 0?1
PROBE 1?2
PROBE 2?3
PROBE 3?4
PROBE 4?5

TYPE Y FOR MEANS?Y
MEAN VALUES
0           1           2           3           4
-.118217    -.124016    -.113868    0           -2.95535E-03
TYPE Y FOR RMS?Y
RMS VALUES
0           1           2           3           4
 .118247     .738732     1.5853     0           7.96475E-03

STOP AT LINE 176

READY
```

Figure 8 (b): Computer Display - Running Program BREAK

sample of the operation of the program BREAK. In both cases, those parts which are underlined are data which must be entered by the operator. The use of each program is, of course, different. The majority of the instructions and commands necessary will be self-evident from the questions which the computer will ask. Once you enter the required number/command, you then press the Return key. In order to clear the display screen, press the Page key.

8.4 To make a copy of the terminal screen, press either the Make Copy key on the terminal or the Copy button on the Hard Copy Unit.

8.5 Some of the commonly used programs and their uses are:

JNSWP, PADSP, RAND2, VSDRAN, CMPARE - generation of random waves,

BREAK, WHEAT - measurement of waves,

VSD1 - analysis of waves,

REGRES - linear regression,

WAVES - calculate wave parameters and values to set the wave machine for regular waves,

GRPH - a subroutine used with other programs for graphics.

9.0 FOILS

9.1 There are two large foils and a set of six small foils, all of which are located at the waveboard end of the W/W.

9.2 The upper large foil is located approximately in the centre of the wind tunnel section of the flume, just in front of the waveboard. This foil has a symmetric airfoil cross section and is pivoted. Movement of this foil is accomplished by means of a chain which hangs along the side of the flume. On the window at this location, there is a scale which indicates the height of the tip of the foil above the W/W Bench Mark as well as the angle from horizontal. Normally this foil rests at 2.171 meters above the Bench Mark at an angle of 4.4° below horizontal.

9.3 The lower large foil is located directly above and in front of the waveboard and is hinged at the waveboard end. There is a crank outside of the flume which controls the positioning of this foil. Normally, it is kept at its highest position.

9.4 The set of six small "wing"-shaped foils is located at the upstream end of the throat of the wind tunnel and they are set one above the other. On the outside of the flume, there are six levers which control the positioning of these foils. Normally, they are kept in a horizontal position.

10.0 MEASUREMENT DEVICES

10.1 Wave Probes

10.1.1 A wave probe assembly consists of a length of teflon wire, a ground strip, and a Robertshaw Level-Tel Transmitter. The teflon wire is secured to the bottom of the W/W and this end of the wire must be sealed. The other end of the wire is fed into the transmitter via cabling. The ground strip is attached to the output ground of the transmitter and is usually made of an adhesive aluminum tape. Since the transmitter is a current output device, a 1000 ohm resister is placed in parallel with the output in order to convert it to a voltage. With this resistor in parallel, the transmitters which we have are capable of a zero to ten volt output swing.

10.1.2 Setting up a waveprobe

In this procedure example, the waveprobe will be set to measure waves over a ten centimeter range with the water depth equal to 55 centimeters. Therefore, zero is at 50 centimeters and the maximum (ten volts) will be at 60 centimeters. In this case, one centimeter will equal one volt.

10.1.3 Setting the waveprobe

a. Set the water level above the zero point (51 centimeters).

b. Adjust the coarse and fine Span controls to their maximum (fully clockwise).

c. Set the coarse and fine zero controls to achieve the desired above zero output (one volt)..

d. Reduce the Span controls to minimum (fully counterclockwise).

e. If the output has changed from step c (one volt), adjust the Null control to return the output to the desired level (one volt).

f. Set the Span controls to maximum.

g. If the output has changed, reset it with the Zero controls. Repeat steps d through f until you can adjust the Span controls from maximum to minimum without affecting the output level (one volt).

h. Set the Span controls to minimum and raise the water level to just below the maximum desired height (59 centimeters).

i. Using the Span controls, adjust the output level to correspond to the new water level (in this case to nine volts, since one centimeter is equal to one volt).

10.1.4 Calibrate the waveprobe by taking an output reading for various water levels. At least six points should be used. Enter these points into the DEC PDP-11/40 computer using the program REGRES. This program will give you the slope, the intercept, and the correlation of the points. The slope is the calibration; the intercept is the zero point, and the correlation is a comparative relation of the accuracy of the entered points. The correlation should be between .99 and .9999; if there is any greater discrepancy, calibration should be redone.

10.2 Differential Pressure Transducers

10.2.1 There are two differential pressure transducers which are used to measure water flow within the pipes of the pump system. There is one located on either side of the pump and they are hooked into the system through annubars. The signals from the transducers are cabled back to the W/W control room and attached to the two Validyne Transducer Indicators. For operation of the Indicators see Appendix 12A.

10.2.2 Every time the transducers and indicators are to be used, the lines of the annubars must be bled, to remove all air bubbles from the system.

10.3 Temperature Probes

10.3.1 There are two temperature probes installed in the W/W; one to measure air temperature and one to measure water temperature. Both of them are platinum wire resistance probes and are very linear. The outputs for these devices are located in the W/W control room above the Hard Copy Unit in the computer rack. The outputs are calibrated at 1 mv/^{o}C and can be read directly by either a voltmeter or strip chart recorder.

10.3.1 The water temperature sensor is located just above the floor within the hammerhead beach, on the east wall.

10.3.2 The air temperature probe is located on the ceiling of the flume, 30 meters from the datum line.

10.4 Dew Point Hygrometer

10.4.1 The Dew Point Hygrometer is used in the measurement of the moisture of air in the W/W tunnel. For operation of this device, see Appendix 12B.

10.4.2 The sensor for the hygrometer is located on the ceiling of the W/W tunnel at a point 30 meters from the datum line. The dew point temperature meter is kept in the W/W control room.

11.0 BIBLIOGRAPHY

1. Dilworth, Secord, Meaher and Associates Ltd: Technical Specification for Fan Installation, Report No. 567/711, 1973.
2. Dilworth, Secord, Meagher and Associates Ltd: Final Report - Design, Construction and Commissioning of a Wind-Wave Flume, Report No. 567/795, 1975.
3. Dynamatic: Manual for 350 H.P. Motor No. SPC-8140, Manual No. 054-1901; Eaton Power Transmission Systems.
5. E.G.&G.: Dew Point Hygrometer Instruction Manual, Manual No. TM71-174; E.G.&G. International, Inc., 1973.
6. MTS: Reference Manual, Servohydraulic Wave Motion Generator, Manual No. 911.43; MTS Systems Corp., 1974.
7. MTS: Service Manual Servohydraulic Wave Motion Generator, Manual No. 911.43; MTS Systems Corp., 1974.
8. MTS: Operator's Manual, Servohydraulic Wave Motion Generator, Manual No. 911.43; MTS Systems Corp., 1974.
9. Robershaw: Technical Service and Maintenance Manual, Manual No. 909-605-158; Robershaw Controls Company, 1976.
10. Sheldons: Erection, Operation and Maintenance Instructions for Sheldons Heavy Duty Industrial Fans, Manual No. 732352; Sheldons Engineering Ltd.
11. Skafel, M. G.: Operating Manual for Generating Random Waves Using the Random Wave Synthesizer, Unpublished Report; CCIW, 1976.
12. Szczucinski, P. W.: Wind Velocity Profiles of the Wind/Wave Flume, Contract No. OSS77-00072; CCIW, 1977.

Appendix 12A: Transducer Indicator Instruction Manual

Dec. 1973

Validyne ENGINEERING CORPORATION

INSTRUCTION MANUAL

TRANSDUCER INDICATOR

MODEL CD12

19414 LONDELIUS STREET • NORTHRIDGE • CALIF. 91324 • (213) 886-5488

Validyne ENGINEERING CORPORATION

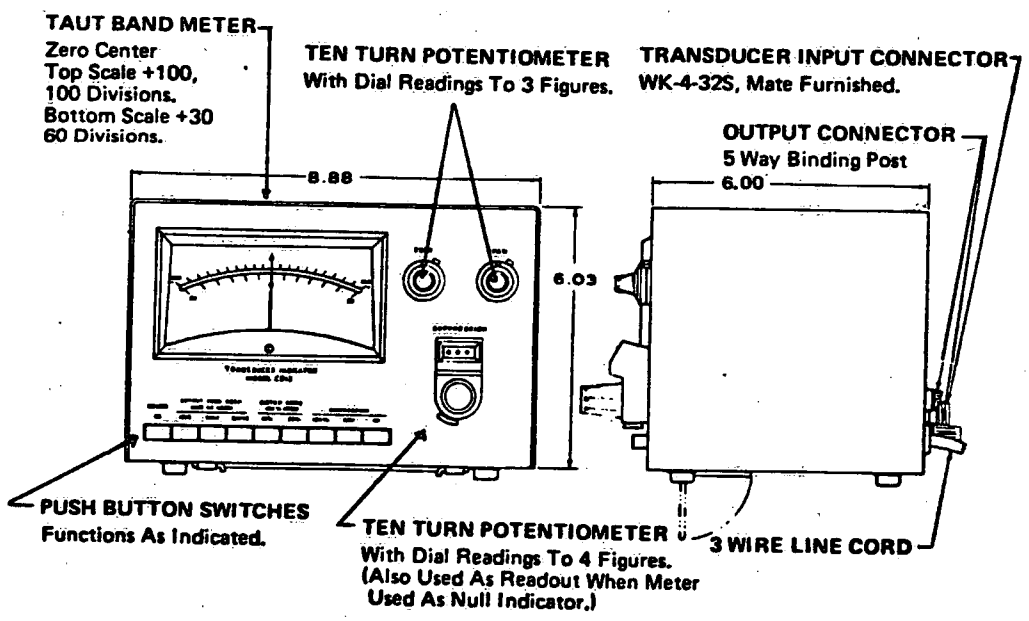

19414 LONDELIUS STREET • NORTHRIDGE • CALIF. 91324 • (213) 886-5488

WARRANTY POLICY

VALIDYNE ENGINEERING CORPORATION warrants equipment of its own manufacture to be free from defects in material and workmanship under normal conditions of use and service. VALIDYNE will replace any component found to be defective on its return, transportation charges prepaid, within one year of its original purchase.

This warranty carriers no liability, either expressed or implied, beyond our obligation to replace the unit which carries the warranty. Prices, specifications and designs subject to change without notice. This warranty is void if the product is subjected to misuse, accident, neglect or improper application, installation or operation.

12/73

19414 LONDELIUS STREET • NORTHRIDGE, CALIF. 91324 • (213) 886-8488

ValidyNE ENGINEERING CORPORATION

INSTRUCTION MANUAL

Model CD12

Transducer Indicator

19414 LONDELIUS STREET • NORTHRIDGE, CALIF. 91324 • (213) 886-8488

CD12 Transducer Indicator

Operating Instructions

1.0 General

1.1 Description

The Model CD12 Transducer Indicator operates with Variable Reluctance Transducers to provide an accurate visual indication as well as providing an analog output. A 5" taut band meter with ± 1% accuracy indicates in engineering units or percentage of full scale. The meter is used as a null indicator when the suppression circuit is activated to resolve static changes to 1 part in 10,000.

A 5 kHz sine wave excitation is supplied to the transducer and the resulting output is amplified and demodulated using the latest integrated circuit techniques. The DC output is obtained through an active filter circuit which gives a uniform response from steady state to 1000 Hz. An output frequency select control is provided to cutoff unwanted signals down to 10 Hz. The low impedance sine wave excitation allows operation with the transducer located over 1,000 feet from the CD12.

All circuits are operated from built-in regulated power supplies; prime power is the nominal 120V 60Hz ac line.

19414 LONDELIUS STREET, NORTHRIDGE, CALIF. 91324 (213) 886-8488

Validyne ENGINEERING CORPORATION

1.2 FUNCTIONAL BLOCK DIAGRAM

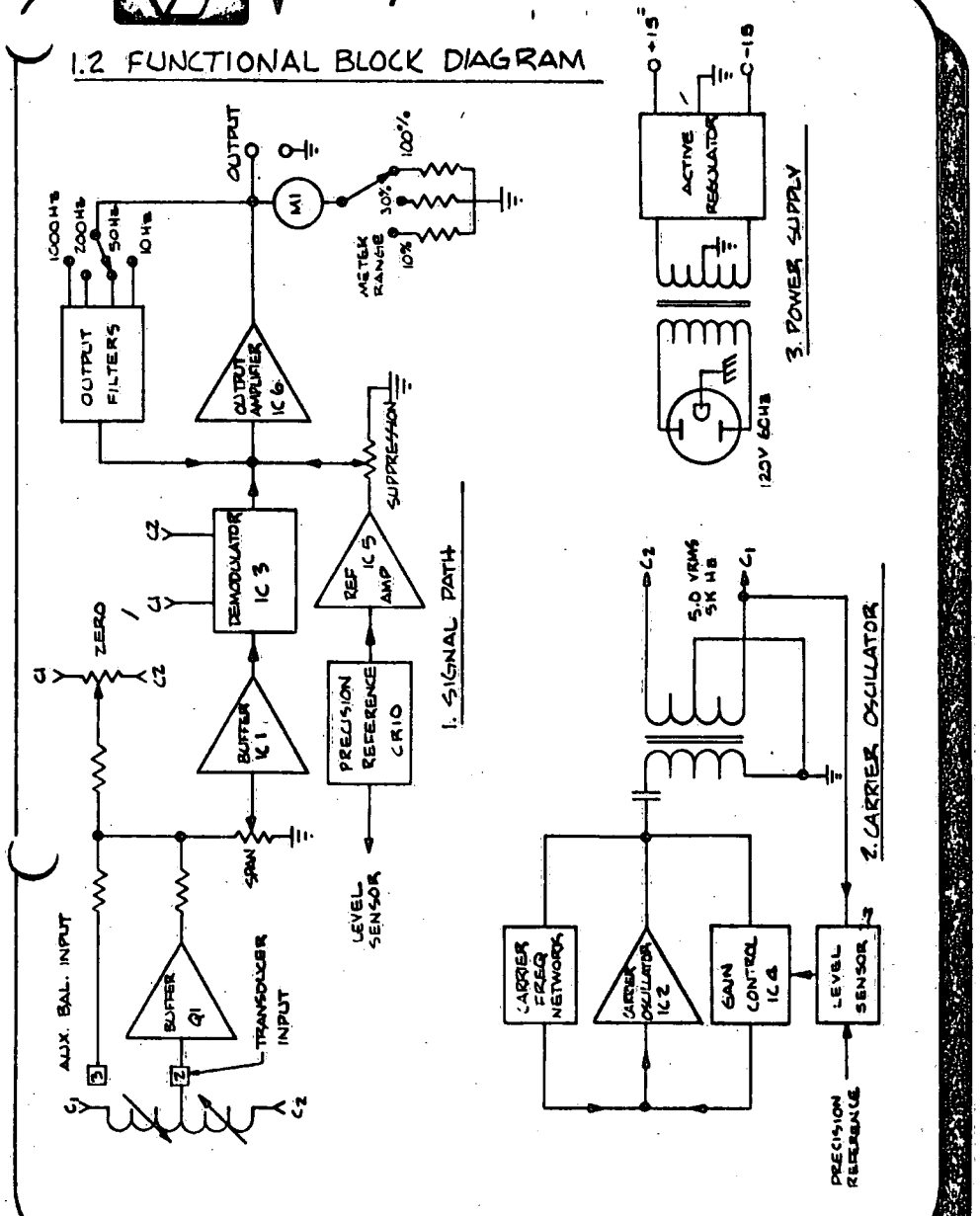

19414 LONDELIUS STREET, NORTHRIDGE, CALIF. 91324 (213) 886-8488

2.0 Specifications

2.1 Electrical

Input Sensitivity	±15mV/V excitation, minimum
Transducer Excitation	5.0V rms, 5kHz sine wave
ANALOG OUTPUT	
Voltage	± 10V dc @ 10mA, short circuit proof
Output Impedance	10 ohms, nominal
Frequency Response	Switch selected: DC-1000Hz, DC-200Hz, DC-50Hz, DC-10Hz, Flat ± 10%
Stability	±0.1%/30 Days
Ripple	Less than 10mV pk-pk
Zero/ΔT	± 0.005%/°F
Gain/ΔT	± 0.01%/°F
VISUAL DISPLAY	5" Taut-Band Meter, zero center
Scales	±100, ±30, ±10%FS, Switch selected
Linearity	± 1% full scale
Null Accuracy	± 0.1% of range

2.2 Temperature Range

Operating & Storage	0-185°F, (-18°C to +85°C)

2.3 Power Requirements

95-125V ac, 50-400Hz, 5 Watts

2.4 Dimensions

8.88"W x 5.71"H x 6.00"D not including controls & connectors. (22.3cm x 14.5cm x 15.3cm) (See Outline Drawing)

2.5 Weight

	3 lbs. (1.36kg)
Shipping	4 lbs. (1.81kg)

3.0 Operation

3.1 Unpacking and Installation

Carefully unpack the CD12, noting that the mating transducer connector (Cannon WK-4-21C) is packed separately in a zip lock bag.

Connect the power cord to a source of 120V 60Hz ac, or to the special power source, if specified, and press the power switch which is left most of the pushbutton row.

Set the ZERO and SPAN controls to 500, and the SUPPRESSION control to 000. Be sure that all pushbutton switches to the right of the power switch are in the normal or unlatched position. With no transducer connected at the rear, the front panel meter should read approximately zero, and should be variable around zero with ZERO control. If the indication is erratic, short the input by connecting PIN 2 of the transducer connector to circuit common (black rear panel banana jack), using a clip lead, to eliminate pickup at the open input.

3.2 Input/Output Connection

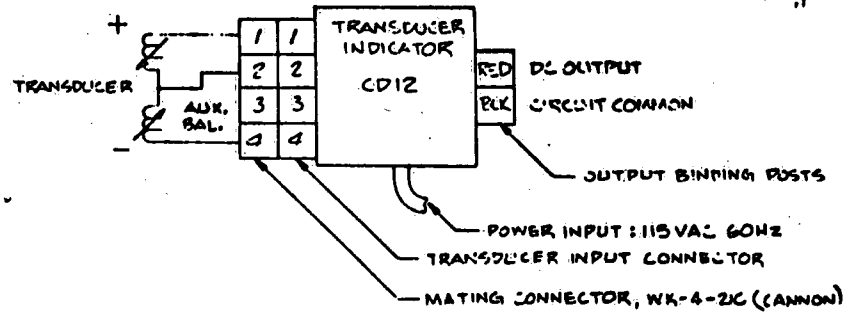

3.3 Control Functions

3.3.1 ZERO Control

The front panel ZERO control is calibrated by a 10-turn locking dial for precisely repeating the setting for a particular transducer. A transducer unbalance of up to ± 10mV/V excitation can be nulled; additional unbalance due to long cable or other offsets in the system may be nulled using the auxiliary balance pin on the input connector (Pin 3). Connect pin 1 to pin 3 for a nominal +47 mV/V input. Connect pin 4 to pin 3 for a -47 mV/V input. Resistors may be used to simulate other inputs; a 41.2K ohm resistor from pin 1 to 3 produces a nominal + 10mV/V shift.

In setting zero and span the ZERO control should be set LAST, as there is slight interaction between the controls, particularly when auxiliary balance resistors are used.

3.3.2 SPAN Control

The SPAN control provides continuous gain control from a maximum gain at ± 15mV/V transducer output for a 10V DC full scale output. This occurs at a dial setting of 1000. At a dial setting of 500, the CD12 products full scale output with a transducer output of approximately 30mV/V. The dial settings are arbitrary, and should be used only to log and reset calibrations.

19414 LONDELIUS STREET • NORTHRIDGE, CALIF. 91324 • (213) 886-8488

3.3.3 Pushbutton Controls

POWER ON	OUTPUT FREQ RESP. 1000 Hz NORM			METER SENS 100% NORM		SUPPRESSION		
	10 Hz	50 Hz	200 Hz	10%	30%	100%	REV	IN

Pushbutton Assembly

A. Output Frequency Response is selectable by depressing the 10Hz, 50Hz, or 200Hz pushbutton. If 1000Hz response is desired, all switches must be in the normal or out position. Latched switches are released by partially depressing either of the two other switches.

B. Meter Sensitivity may be increased by depressing the 30% or 10% pushbutton. In the normal or both out position, the meter reads ± 100% full scale output.

C. The SUPPRESSION CIRCUIT produces a DC signal equal to and opposite in sign to the input. Latching the IN pushbutton allows dialing of the suppression level on SUPPRESSION control. 1000.0 equals 100% of full scale and is exactly 10.0V DC at the output.

The REVERSE pushbutton allows (-) signals to be suppressed when latched, and (+) signals to be suppressed when in normal position.

19414 LONDELIUS STREET • NORTHRIDGE, CALIF. 91324 • (213) 886-8488

The 100% pushbutton bypasses the suppression control, and applies +10V DC or -10V DC to the output depending on the REVERSE button position. The meter nulls to zero when the input is completely suppressed; increasing meter sensitivity as null is approached improves null accuracy, and allows 4 digit readout at the SUPPRESSION dial.

D. DYNAMIC READINGS may be made in the suppression mode by suppressing the DC value as above, and observing the null meter or DC output. With suppression circuit in, static pressure will be read from the SUPPRESSION dial, while dynamic changes will be read from the meter and/or analog output. The analog output scale factor does not change when the METER SENSITIVITY is changed.

3.4 Calibration Procedure

Connect a Validyne Variable Reluctance Pressure Transducer to the rear input connector. (Other variable reluctance transducers such as LVDT also operate with the CD12, see Paragraph 3.5). Use the cable which will be installed in the system, if possible, as length affects the SPAN setting. With all pushbuttons in the normal or 'out' position, push the POWER button to ON.

19414 LONDELIUS STREET • NORTHRIDGE • CALIF. 91324 • (213) 886-8488

Validyne ENGINEERING CORPORATION

3.4.1 Connect the transducer to the pressure source, and bleed the system. Reduce the differential pressure to zero, and adjust the front panel ZERO control for a null indication on the meter. Increasing the sensitivity by pressing the 30% or 10% buttons may aid in achieving the best null.

3.4.2 Place the meter sensitivity in the 100% or 'both out' position. Apply full scale pressure to the transducer, and adjust the SPAN control for 100% indication on the panel meter. This setting corresponds to the maximum sensitivity available from the connected transducer and provides 10V dc output at the rear panel banana jacks. Lock the dial.

If desired, the SPAN control may be reset to make the meter read in engineering units rather than % FS. (Example: 800 PSID input = 80% F.S. The DC output will also follow the meter, and will be 8.0V at 800 psid.)

3.4.3 Reduce the input pressure to zero and recheck the zero setting. Reset the ZERO control if necessary, and lock the dial.

3.4.4 The transducer, cable, and CD12 are now calibrated as a system. Record the dial settings of the ZERO and SPAN controls to allow future application of the system without repeating the above procedure. When multiple transducers are used with a single CD12, both ZERO and SPAN settings should be recorded for each transducer.

19414 LONDELIUS STREET • NORTHRIDGE • CALIF. 91324 • (213) 886-8488

3.4.5 Check the suppression circuit as follows:

1. Set the SUPPRESSION control to 500.0
2. Reduce the input pressure to zero and recheck the ZERO control setting
3. Set the METER RANGE to '100%'. (Both out)
4. Press "SUPPRESSION IN" button. The meter should read -50% FS.
5. Press the '100%' button; the meter should read -100% FS
6. Press the 'REV' button; the meter should read +100% FS
7. Release the '100%' button; the meter should read +50%FS
8. Release the SUPPRESSION 'IN' button; the meter should read zero

3.4.6 Check the meter sensitivity circuit as follows:

1. Set the SUPPRESSION control to 300.0
2. Reduce the input pressure to zero and recheck the ZERO control setting
3. Press the '30%' meter sensitivity push button
4. Press the suppression 'IN' button. The meter should read (-) full scale
5. Press the 'REV' button. The meter should read (+) full scale
6. Set the SUPPRESSION control to 100.0
7. Press the '10% meter sensitivity pushbutton. The meter should read (+) full scale
8. Press the 'REV' button. The meter should read (-) full scale.

19414 LONDELIUS STREET • NORTHRIDGE • CALIF. 91324 • (213) 886-8488

This completes the checks of the suppression and meter sensitivity functions. All adjustments are made at the factory; should any of these checks fail, please return the CD12 for repair.

NOTE: An oscilloscope connected at the rear panel banana jacks is often helpful in isolating problems such as open or shorted transducer leads, RF interference and other noise sources.

3.5 LVDT Transducer Connection

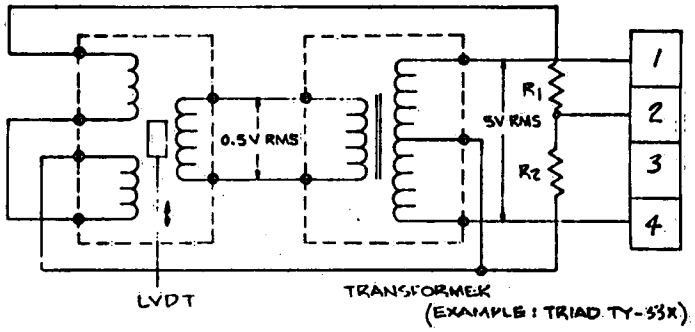

LVDT Transducers typically have much higher output than diaphragm-type pressure transducers. To avoid saturation of the CD12 Input Amplifier, a 10:1 step down transformer is connected between the excitation output and the transducer input. Further attenuation can be provided by resistors R1, R2 connected as shown. Values for R_1 & R_2 should not exceed 50K ohms, or be less than 10K ohms for most applications.

19414 LONDELIUS STREET • NORTHRIDGE • CALIF. 91324 • (213) 886-8488

4.0 Principles of Operation

4.1 Carrier Oscillator

The carrier oscillator is a low distortion Wien Bridge type, with a differential amplifier level sensor, IC4. A field effect transistor, used as a voltage controlled resistor, balances the bridge. Both oscillator frequency and amplitude are regulated by a stable, temperature compensated zener diode. The oscillator supplies 5.0V rms 5kHz sine wave to the transducer from the center tapped secondary of a transformer. Grounding the center tap completes the transducer bridge circuit, and produces an output which is amplitude proportional to transducer unbalance, and sense dependent on unbalance direction. This AC output is fed to the input of the amplifier/demodulator.

4.2 Amplifier/Demodulator

The outputs from the transducer, the ZERO control, and the auxiliary balance pin, are summed into the SPAN potentiometer. The pot wiper feeds amplifier IC1 which drives the demodulator stage, IC3. The output stage, IC6, utilizes a 3-pole active low pass filter to effectively control the pass band of the system, and to eliminate carrier ripple on the CD12 output. Four filters with frequencies of 1000Hz, 200Hz, 50Hz, and 10Hz are installed. The desired filter is selected by a front panel push button.

19414 LONDELIUS STREET, NORTHRIDGE, CALIF. 91324 (213) 886-8488

Validyne ENGINEERING CORPORATION

4.3 Suppression Circuit

The precision reference voltage is buffered by differential amplifier IC5, and applied to the SUPPRESSION control. The output of the SUPPRESSION control is applied to the non-inverting input of output amplifier IC6. When the '100%' button is depressed, the control is bypassed, and the full reference voltage is applied to IC6.

4.4 Meter Circuit

The panel meter has a taut-band movement with range of 100-0-100 microamps dc. The meter and scale-determining resistor are series connected between the analog output and circuit common. Changing the meter sensitivity does not affect the output.

4.5 Power Supply/Regulator

The AC line is isolated by step-down transformer T1. A full wave bridge rectifier and filter feeds unregulated DC power to the series regulators, Q2 and Q3. DC output filter capacitors complete the regulators which are designed to withstand momentary short circuits. Nominal output voltage is (+) and (-) 15V dc.

5.0 Maintenance

The CD12 Transducer Indicator normally is not repairable in the field. Should the unit fail to operate peoperly, return it to the factory for repair.

19414 LONDELIUS STREET, NORTHRIDGE, CALIF. 91324 (213) 886-8488

Appendix 12B: Dew Point Hygrometer Instruction Manual (Excerpts)

THE DEW POINT HYGROMETER

MODEL 880

INSTRUCTION MANUAL

TM71-174

REVISED JANUARY 1973

This Instruction Manual applies to Instruments with Serial Numbers 540 thru 889.

Prepared by

EG&G International, Inc.
ENVIRONMENTAL EQUIPMENT DIVISION
151 Bear Hill Road
Waltham, Massachusetts 02154

Telephone (617) 890-3710

SECTION 1

INTRODUCTION

1.1 GENERAL DESCRIPTION

The Model 880 Dew Point Hygrometer, Figure 1, is an instrument designed for use in the measurement of moisture in gases in laboratory and limited, industrial applications. The instrument is a portable, line operated, bench-top hygrometer which utilizes the dew point condensation principle to determine the water vapor concentration in gas mixtures. It incorporates a direct reading, front panel dew point temperature meter with both Fahrenheit and Centigrade scales which can also be used with a remote thermistor probe to measure temperature. The instrument provides a 0 to 50-millivolt output to record the meter deflection. The sensor is normally mounted at the rear of the instrument but can be used at a remote location.

1.2 SPECIFICATIONS

METER SCALE:	-40°F to +120°F, 2°F increments. -40°C to +50°C, 1°C increments.
TEMPERATURE READOUT:	Thermistor (non-linear), 1K-Ohm at 25°C.
DEW POINT DEPRESSION:	Maximum depression capability 80°F for Standard Sensor and 100°F for Accessory Sensor, at ambient temperature of 80°F; 1°F depression is lost for each 3°F decrease in ambient temperature.
OUTPUT:	0 to 50 mV proportional to meter deflection.
SAMPLE PRESSURE:	2 psia to 60 psia - Standard Sensor 2 psia to 200 psia - Accessory Sensor
SAMPLE FLOW RATE:	0.5 SCFH to 5 SCFH.
INSTRUMENT AMBIENT TEMPERATURE:	+40°F to +120°F.
COOLING RATE:	4°F/sec, maximum.
RESOLUTION:	0.5°F, nominal.
ACCURACY:	2°F, nominal.
POWER:	50W, 115-V, ac, ±10%. Can convert to 230-V, ac.
WEIGHT:	12 lb.

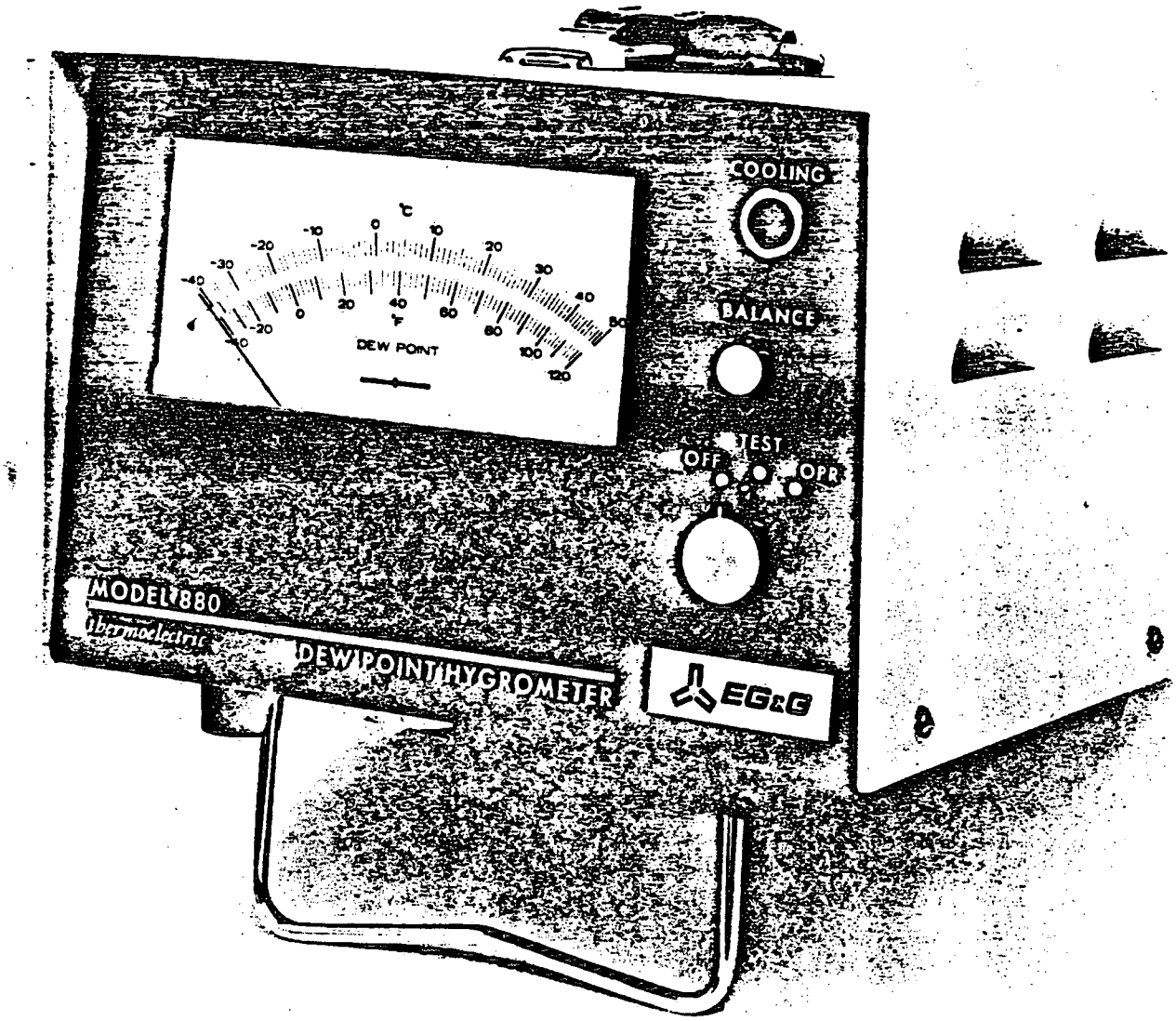

Figure 1. Model 880 Dew Point Hygrometer.

SECTION 3
OPERATION

3.1 OPERATING PROCEDURE

To assure proper operation of the Model 880 refer to Figure 1 and Figure 5, Rear View of the Model 880 Dew Point Hygrometer, before attempting the standard operating procedure, described in the following paragraph.

1. Locate the Model 880 in a clean area, free of vibration and with free air circulation for convection cooling.
2. Connect the sensor to the air sample via the air intake port (Figure 3) with cleaned, non-hygroscopic, leak-free connections and provide a flow rate of about 2 SCFH.
3. Connect the power cable to a 115V, 60 Hz power source (230V when modified internally).
4. Place the rear METER (Figure 5) switch in the DEW POINT position.
5. Place the front panel control switch (Figure 1) to the TEST position.
6. After switching to the TEST position, allow the meter pointer to move toward the center scale position as the mirror's water or frost film evaporates. When the meter pointer is at a maximum and appears to stop, adjust the BALANCE knob* for a center scale reading (at the diamond below the words DEW POINT). If a balance condition cannot be achieved, clean the mirror (para 6.2) and repeat Steps 4, 5 and 6. If the balance condition is still unattainable, adjust the internal SENS CAL adjustment (para 6.2(5) and proceed with Step 7**.
7. Turn the front panel switch to the OPR position.
   The COOLING lamp should increase to maximum brightness*** and the front panel meter will now display the mirror temperature. The temperature will initially indicate above the ambient temperature and then drop to below the dew point of the gas sample. At this point condensate will form on the mirror surface, inside the sensor, causing a reduction in intensity of the cooling lamp and a decrease in the cooling rate of the mirror. In a short time the indicated

*Adjust BALANCE knot within one minute after the pointer reaches a maximum and appears stable, otherwise the pointer may begin to drift up or down as the Sensor electro-optical components heat while in the TEST position.

**When the 880-SU Selector Unit is used, all balancing is performed at the Selector Unit per instructions in the 880-SU Manual.

***Momentarily switch to unmarked position beyond OPR position to determine appearance of lamp at maximum brightness.

temperature will stabilize at the sample dew point. When this occurs the cooling lamp intensity will depend on the dew point depression, dim for low depression and bright for maximum depression. The dew point depression is the difference in temperature between the ambient temperature and the dew point temperature of the sample. Sudden changes in the sample dew point will cause a fluctuation in the lamp intensity followed by a change in the indicated dew point reading. A constant fluctuation of the lamp intensity is indicative of control-loop oscillation and may occur at high sample flow-rates or at high gain settings (an internal instrument adjustment). The constant fluctuation is not detrimental to good readings when the dew point temperature indication is steady.

8. In the event that the air sample is very dry and the dew point is below the capability of the instrument, the COOLING lamp will remain at maximum intensity indicating that the temperature is slowly approaching a minimum reading. If it is desirable to determine the hygrometer's lowest temperature capabilities, an unmarked (fourth) position is provided on the front panel switch beyond the OPR position. When the control switch is in the unmarked position the instrument will constantly cool to maximum capability. However, when in this position, if the sample is of a high dew point, excessive condensate will tend to collect and it will take a long time with the control switch in the TEST position, to remove all the condensate.

Appendix 12C: Psychrometric Chart

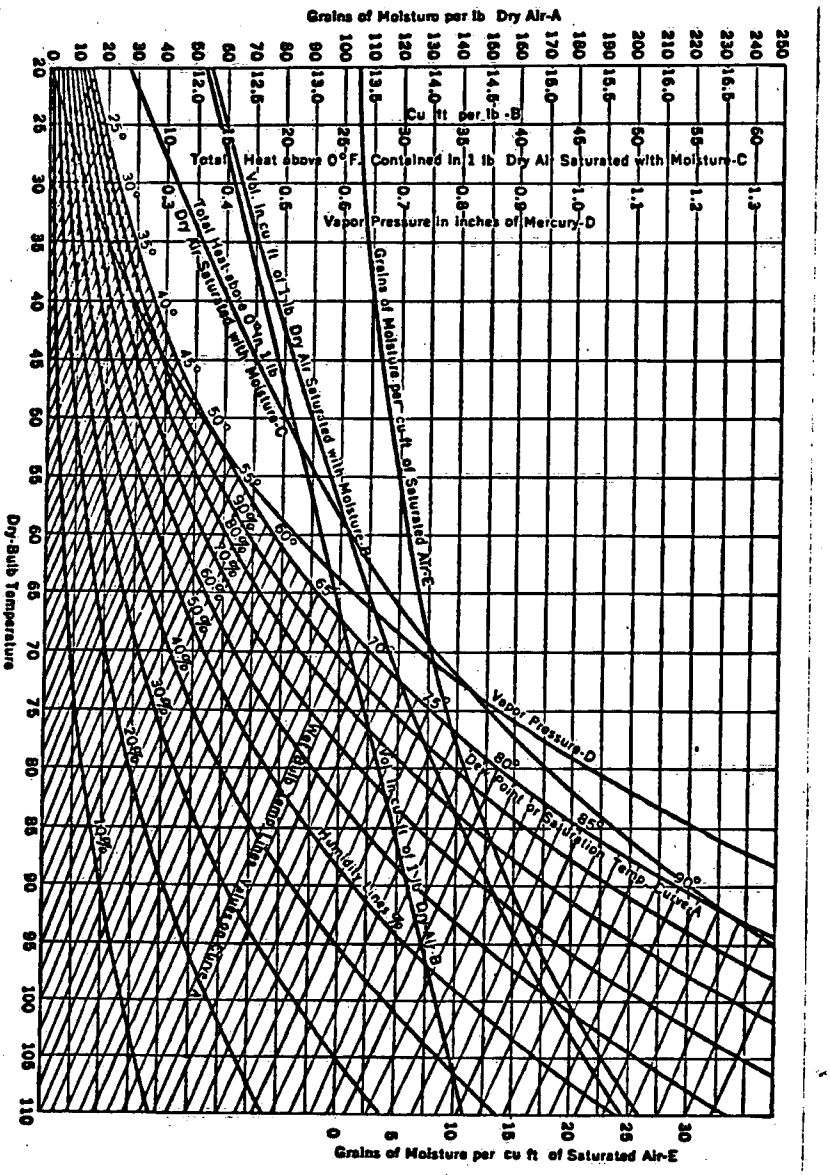

Fig. 1. Psychrometric Chart