BIOLOGICAL TREATMENT OF FOOD PROCESSING WASTEWATER DESIGN AND OPERATIONS MANUAL

by

Stanley Associates Engineering Ltd.

for the

Water Pollution Control Directorate
Environmental Protection Service
Environment Canada

Report No. EPS 3-WP-79-7

REVIEW NOTICE

This report has been reviewed by the Water Pollution Control Directorate, Environmental Protection Service, and approved for publication. Approval does not necessarily signify that the contents reflect the views and policies of the Environmental Protection Service. Mention of trade names or commercial products does not constitute recommendation or endorsement for use.

ABSTRACT

Recent environmental legislation has made it necessary, in many cases, for the food industry to treat its wastewater prior to discharge. Although most wastes from the food processing industry are amenable to biological treatment, the success of the operation has been hindered by seasonability of operation, climatic conditions, faulty design and inadequate operation, as well as poor in-plant controls.

This manual presents information regarding the design and operational requirements of currently available technology. The manual is intended to provide useful information to the food processing industry in assessing its treatment needs.

Twelve case histories are presented for plants processing fruits and vegetables, milk products, meat products, and beverages. Design and operational data for existing wastewater treatment systems are included in the case histories.

RÉSUMÉ

Des règlements récents obligent l'industrie alimentaire à traiter ses eaux usées avant de les rejeter dans un cours d'eau. Ils ont pour but de protéger l'environnement et ne souffrent que très peu d'exceptions. La plupart des effluents se prêtaient déjà au traitement biologique; toutefois, l'efficacité de celui-ci était amoindrie par son caractère saisonnier, les conditions météorologiques, la conception et l'exploitation inadéquates ainsi que par l'épuration insuffisante à l'intérieur même des usines de transformation alimentaire.

Ce manuel traite des exigences de conception et d'exploitation que supposent les techniques actuelles. Il vise à renseigner l'industrie sur la façon d'évaluer ses besoins en matière d'épuration.

Il présente 12 cas typiques, reliés au traitement des effluents d'usines de fruits et légumes, de produits laitiers, de viandes et de boissons. Il inclut également des données portant sur la conception et l'exploitation des systèmes actuels de traitement.

TABLE OF CONTENTS

Page

LIST OF FIGURES

LIST OF TABLES

1 INTRODUCTION

1.1 Purpose of the Manual

Most food processing operations produce highly concentrated organic wastewater. Recent public and government emphasis on the preservation of surface water quality has resulted in the development of government regulations and guidelines to reduce and regulate the pollutional load discharged to surface waters by such wastewater sources. These regulations have, in most cases, necessitated the treatment of food industry wastewaters prior to discharge.

Since most food processing wastewaters are non-toxic to microorganisms and readily biodegradable, they are generally amenable to stabilization by biological treatment. A wide variety of biological processes have been used by the food industry to treat its wastewater. Some of these treatment systems have operated with considerably more success than others. However, problems such as the seasonality of operations, the severe climatic conditions, poor in-plant controls, faulty design and inadequate operations, have all contributed to the failure of a number of biological waste treatment systems.

The primary objective of this manual is to provide sufficient information to allow food industry personnel to actively and knowledgeably participate with their design engineers in developing a solution to their environmental problems. It should be noted that the manual is not intended to provide complete information on the design of biological treatment systems, nor does its use preclude the necessity of retaining competent engineers to design the facility. Rather, it is intended to demonstrate the need for a comprehensive wastewater management program and to develop a familiarity within the industry with the concepts of biological waste treatment, the alternative treatment methods available, and the advantages, disadvantages, operational requirements, and capabilities of each.

The manual is intended to be used in conjuntion with two other Environment Canada publications which deal with treatment of food processing wastes by land application, and physical/chemical methods (1,2).

1.2 Necessity for Biological Treatment

Where a food processing wastewater is to be discharged directly to a receiving body, some form of wastewater treatment will always be required. Of primary concern in the discharge of most food processing effluents is the relatively high concentrations of biodegradable material and suspended matter which they contain. If these materials are not removed from the wastewater prior to discharge, problems such as oxygen depletion, and the formation of turbidity, scum, and sludge banks may occur in the receiving body. These conditions are not only aesthetically unacceptable but also deleterious to the aquatic environment. Other components of food processing wastewaters, such as fats, oils and greases, pathogenic bacteria, nitrogen and phosphorus can also lead to a serious deterioration in receiving water quality.

Biological treatment, when used in conjunction with physical or physical/chemical techniques, is capable of removing sufficient quantities of the above materials to satisfy most regulatory agency requirements. Determination of the most cost-effective means of meeting these requirements necessitates a detailed evaluation of the alternative treatment methods available and an assessment of their applicability to the particular case in question.

In selecting a waste treatment process for a specific application, consideration should always be given to the potential for employing alternative techniques or combinations of techniques to achieve the most cost-effective treatment solution.

As will be discussed in Section 2, significant economic advantages can be realized by initiating any wastewater management program with a comprehensive review of water use and waste generation practices within the plant. Reduction in water usage and improved recovery of waste materials prior to their reaching the plant sewer can substantially reduce the cost of processing both the food product and the waste which this operation generates. Cost-effective wastewater treatment can only be achieved if it is regarded as a necessary and integral process within the total plant production system.

1.3 Manual Format

Section 2 of this manual discusses the critical steps which should be followed in selecting, designing, and obtaining approval for a wastewater treatment system. This includes information related to the identification of regulatory agency requirements, the planning and execution of a wastewater characterization study, and methods of evaluating alternative treatment processes. The major wastewater parameters are identified and defined, and some typical characteristics of food processing wastewaters are presented.

Section 3 describes the fundamentals of biological treatment. The principles of microbiology and the way in which they affect biological treatment processes are discussed. Aeration and secondary clarification, the two unit processes closely associated with most types of biological treatment, are also discussed.

Section 4 describes the alternative methods of biological treatment available and outlines typical design criteria, performance data, operational requirements and the potential problems of each.

Section 5 presents a brief discussion of a number of pretreatment processes. These include flow equalization, screening, gravity separation, flotation, disinfection, and sludge treatment and disposal.

Finally, Section 6 presents design and operating data from the experiences of 12 food processing plants employing a number of different biological treatment alternatives. Particular problems encountered with the treatment facilities at these plants, and data on capital and operating costs are also presented.

A summary of regulatory agency requirements and the approvals process employed by each of the ten Canadian provinces is included as Appendix I. A glossary of technical terms used in the manual is presented in Appendix II.

2 CRITICAL STEPS IN THE SELECTION, DESIGN AND APPROVAL OF A WASTEWATER TREATMENT SYSTEM

2.1 Introduction

The purpose of this section is to outline the critical steps which should be followed and considerations which should be made in the selection, design and approval of a biological wastewater treatment system. To ensure the satisfaction of all regulatory agency requirements and the selection of a cost-effective treatment process, it is imperative that a rational and comprehensive approach to wastewater management be adopted.

The selection approach should be initiated with the identification of regulatory agency requirements. Discussions with municipal, provincial or federal representatives should be conducted to determine the standards which will be imposed on the plant effluent, and the permits and approvals required to construct and operate the waste treatment facility.

Prior to commencing any actual treatment plant design work, it is of utmost importance that a comprehensive wastewater characterization program be undertaken and completed. The program should include the identification and measurement of all in-plant flows and waste loadings, and an investigation of the potential for reducing these. An effective treatment facility can only be designed if accurate information is available on the strength and flow of the waste, and the variability of these two parameters. Furthermore, minimizing the wastewater flow and recovery of waste materials prior to their reaching the plant sewer will result in appreciable savings in both capital and operating costs for the proposed treatment facility.

Excessively high water usage and waste strength is usally indicative of the need for a conscientious review of waste conservation and in-plant housekeeping practices. Most waste found in food processing effluents is simply that fraction of the raw product which was not recovered in the processing operation, and for which water has been used as a transporting medium. Since both the raw product and the water must be purchased initially, processing costs are obviously directly proportional to the amount of wastewater generated. In addition, the failure to recover the waste material either as primary product or as a byproduct represents a loss of potential profit. Finally, the costs of constructing and operating a treatment facility are proportional to both the amount of wastewater requiring treatment and the strength of the waste. A well-planned and executed waste characterization study should provide an opportunity to explore methods of reducing water usage and waste loss, thereby reducing both treatment and processing costs.

A competent and experienced individual or firm should be retained to evaluate the feasibility of alternative methods of treating the waste. Procurement of the most cost-effective treatment facility usually requires an assessment of a number of treatment options. This may involve bench and/or pilot-scale testing prior to selection of the treatment process and its design critieria. This work should be conducted by personnel not only knowledgeable in the field of wastewater treatment and disposal, but very familiar with the particular food processing industry and the characteristics associated with its wastewater.

The aforementioned three important steps:

1) identification of regulatory agency requirements,
2) wastewater characterization, and
3) treatment process selection

are discussed in further detail in the following sections.

2.2 Identification of Regulatory Agency Requirements

2.2.1 Importance and Necessity. The selection of a wastewater treatment process for a particular application will be highly dependent upon the restrictions imposed on the quantity, quality and nature of the discharge by the concerned regulatory agency. These limitations are imposed in the interest of protecting receiving water quality from the deleterious effects of excessive pollutant discharge. When the assimilative capacity of the receiving body is exceeded, deterioration of the aquatic environment results. Thus, it is important that these discharge restrictions be identified and that every effort is made to ensure they are complied with.

Furthermore, many regulatory agencies require the submission of all plans and details of proposed treatment works, for approval, prior to the commencement of construction or operation.

For the above reasons, it is obviously expedient to contact the appropriate agency at the outset to determine the exact requirements which must be met. A continued liaison with the agency as the project progresses should ensure that the approvals process proceeds smoothly. Neglecting to contact all appropriate agencies in the early stages of the program may very well result in an unpleasant "surprise" and necessitate costly modifications to a proposed design at a later date.

It is conceivable that federal, provincial, and municipal levels of government may all have certain requirements which must be met with regards to the construction and operation of a waste treatment facility. In such cases, the appropriate agencies from the three levels of government should be contacted initially and their respective effluent quality requirements should be identified. The subsequent treatment plant design should be based on the most stringent of these requirements to ensure that all discharge regulations are met.

2.2.2 **Municipal Requirements.** Municipal concerns will generally be restricted to cases where the industry's wastewater is to be discharged to the municipal sewerage system. Acceptance of large quantities of food processing waste can adversely affect municipal systems. If food plant effluent flows are allowed to exceed design values for the municipal sewerage system, it may be unable to accept the flow excess.

Flow surges, which frequently occur during plant clean-up at the end of a processing shift, may reduce treatment efficiency at the municipal plant. Batch dumping of highly acidic or basic wastes can create problems of fluctuating pH, which also upset municipal treatment plant operation.

Similarly, the high organic loading discharged by many food processing plants can upset a municipal sewage treatment plant, particularly if it was not originally designed to handle such wastes. Furthermore, excessive organic loadings can result in the creation of anaerobic conditions in the sewer system, which leads to the generation of hydrogen sulphide gas. This may in turn cause corrosion problems with sewer pipe, odour problems at manholes and treatment plants, and create hazardous toxic conditions for sewer maintenance workers.

The high concentrations of grease and suspended solids found in many food processing wastewaters can also cause problems in municipal sewers and sewage treatment systems. Both of these wastewater components cause physical problems such as sewer line blockages and clogging of pumps and screens. They can also result in the creation of anaerobic conditions in sewers and organic overloading at the treatment plant, as discussed earlier.

To protect itself and its employees from problems such as those discussed above, many municipalities will require some degree of pretreatment for industrial wastewaters prior to discharge to the municipal sewerage system. This pretreatment requirement is frequently imposed in the form of a municipal sewage by-law. The by-law may lay down pretreatment requirements and permissible daily discharges for a number of parameters such as flow, BOD_5, suspended solids, oil and grease, pH, and any other constituent of the waste which has been found to cause problems in the past. The by-law will frequently provide for a system of surcharges or penalty payments for discharges in excess of the prescribed limits.

In cases where a plant effluent will discharge to a municipal sewerage system, the municipality will, in the majority of cases, be the primary regulatory body. Discussions should be held with the municipality to ascertain what discharge limits will apply and what pretreatment requirements must be met.

The above comments have dealt exclusively with the case of industrial discharge to municipal systems. However, it should be noted that in cases where an industry, located within the confines of a municipality, discharges its waste directly to a receiving body, the municipality may still impose discharge restrictions on the plant effluent. These restrictions may prove more stringent than either the provincial or federal requirements which would normally apply for discharge to a watercourse.

2.2.3 Provincial Requirements. All ten Canadian provinces require a Permit to Construct and/or a Permit to Operate a waste treatment facility. The information requirements which must be met and the methods of obtaining the necessary approvals vary from province to province and the reader is referred to Appendix I for information on the specific provincial approvals processes.

In general, the provincial regulatory agency will establish effluent criteria on a case by case basis. These criteria will usually reflect such considerations as the assimilative capacity of the receiving body, downstream water usage requirements, and more generally, the provincial objectives with respect to pollution control. Parameters such as flow, BOD_5, suspended solids, oil and grease, pH, ammonia, and phosphorus are frequently regulated by the provincial agencies.

Once these criteria have been established, and the plant has identified its wastewater characteristics, a treatment facility can be designed to meet the effluent requirements. Prior to commencement of construction, the plans and design data must generally be submitted to the regulatory agency for approval. If satisfied that the proposed facility will in fact meet the effluent criteria previously established, the agency will then grant approval to construct the plant. If, however, there appears to be some doubt about the ability of the proposed plant to comply with provincial requirements, the agency may request certain design modifications prior to granting such approval. As discussed earlier, maintaining a close liaison with the regulatory agency in the early stages of the project should minimize the number and magnitude of such required changes.

Upon completion of construction, and prior to commencing operation, some provinces require procurement of a Permit to Operate. This permit generally specifies the permissible discharge criteria established previously, and the monitoring and reporting requirements. Information including as-built drawings, operating details for the treatment plant, and the proposed effluent monitoring program may have to be supplied in order to obtain an Approval to Operate. These requirements vary from province to province.

2.2.4 Federal Requirements. The Environmental Protection Service of Environment Canada is in the process of establishing national baseline effluent standards for all major sectors of the food processing industry. These environmental controls, in the form of regulations and guidelines based on the Fisheries Act, establish "a common level of decency" across the country by means of a program of point source control.

The standards are based on "Best Practicable Technology" (BPT), i.e., that technology which is: a) both technically and environmentally sound based on its current usage in Canada; and, b) economically or financially practicable in that the normally healthy sector of the industry can and has installed and operated the technology over a period of time without undue economic disruption.

With the exception of the "Fish Processing Plant Guidelines" (3), which outline the technology to be employed, environmental control packages for other food processing sectors have included in the definition of BPT some form of biological treatment. It should be pointed out, however, that the individual plant is left the freedom to choose the system it wishes to employ to meet the standards.

New plants, or those whose production capacity has been significantly increased within a specified period of time must comply with the regulations immediately. The regulations permit authorized deposits* of various deleterious substances* such as BOD_5, suspended solids, oil and grease and specify an acceptable pH range for the effluent discharge. They also specify monitoring and reporting requirements.

The guidelines, which apply to existing plants, also specify maximum deposits of BOD_5, suspended solids, etc., as well as the pH requirement. However, the guidelines provide sufficient flexibility to enable the regulatory agency and the owners of existing plants to negotiate and implement a Schedule of Compliance.

Since the federal controls are based on the Fisheries Act, guidelines for all plants both new and existing, are established for the measurement of acute lethality (toxicity). The goal of the toxicity guideline is to produce effluents which will not cause

---

*represents the legal terminology used in the regulations mortality to fish. Due to the nature of the test procedure, this objective is expressed as "no more than 50% of the fish die in a composite sample" of the undiluted effluent within a specified time period, usually 96 hours.

The federal controls also provide for the situation where a plant chooses to have its wastewater treated in an off-site facility, typically a municipal treatment plant. In such cases (and there are many in the food processing industry), where adequate treatment is provided at an approved off-site facility, the effluent discharge is not considered under the federal regulations/guidelines.

Environmental "accords" or working agreements have been established between the federal government and all provinces. Under such an arrangement the province agrees to establish and enforce federal effluent requirements for specific industrial groups and pollutants. The problem of duplication of effort in arriving at compliance schedules with individual plants, and in monitoring and reporting procedures is therefore avoided. Most important, the agreements establish a single point of contact for the industrial groups. In those cases where a province does not have the resources to carry out the activities associated with the agreement, the Environmental Protection Service is prepared to assume responsibility. If a municipal or provincial regulatory agency also issues effluent standards on direct discharge, the most stringent requirements prevail.

2.3 Wastewater Characterization

2.3.1 Importance. The objectives of this section of the manual are to define the key wastewater quality parameters, provide a range of typical values for Canadian food processing wastes, and outline the essential features of a waste characterization program.

Knowledge of the characteristics of a wastewater to be treated is essential for the successful design and operation of a biological treatment system. The importance of the waste characterization program cannot be over-emphasized. Not only does the program provide the engineer with the necessary information required to select and design an appropriate waste treatment facility, but it also provides an excellent opportunity to identify the areas of high water usage and high waste loadings within the plant. This frequently enables the plant personnel to recognize ways by which greater water conservation can be practiced and more waste can be recovered prior to entering the sewer, thereby reducing treatment and processing costs.

2.3.2 Major Wastewater Quality Parameters. The major wastewater quality parameters which influence the design and operation of a treatment system include the following:

1) wastewater flow rate,
2) biochemical oxygen demand (BOD_5) and chemical oxygen demand (COD),
3) suspended solids (SS),
4) oil and grease,
5) nitrogen (N),
6) phosphorus (P),
7) pH,
8) toxicity,
9) bacteria and viruses.

1) Wastewater Flow Rates. Wastewater flow rate is an important design parameter for any waste treatment system. Each element of the system must be sized to provide a minimum average detention (holding) time or a maximum average flow-through velocity. Grit removal tanks and sedimentation basins are designed to provide a low enough cross-flow or upflow velocity to permit the settlement of particulate matter in the waste. The biological reactor stage of the process must be sized to provide adequate detention time for the removal of soluble organic material from the wastewater. Flow surges of greater magnitude than that for which the plant was designed can increase these velocities and decrease detention times sufficiently to result in the deterioration of treatment performance.

The flow rate information which should be determined prior to designing a system includes:

a) present and projected future average flow rates,
b) present and projected future minimum and peak flow rates,
c) patterns and magnitude of flow variation; hourly, daily, weekly, and seasonal.

Because of the nature of the food processing industry, wastewater flows from many plants exhibit considerable variation on an hourly, daily, and seasonal basis. In such cases, special design features such as flow equalization may have to be considered to provide an economic and stable treatment process.

Information on projected future flow rates is useful in designing a plant which can be more readily expanded to accommodate an increased flow. For instance, it is particularly important to ensure that the feed channels between various units in a treatment facility are hydraulically designed to accommodate future flow increases. The neglect to design wastewater treatment plants with future expansion in mind may result in costly modifications to the existing facility when such expansion is required.

2) Chemical oxygen demand and biochemical oxygen demand (COD and BOD_5). Chemical oxygen demand is a measure of the amount of oxygen required by chemical reagents to completely oxidize the organic and inorganic content of a wastewater, while biochemical oxygen demand measures only the amount of oxygen consumed by bacteria in stabilizing the organic fraction of the waste.

Traditionally, the BOD_5 test has been used extensively to measure waste strength and the treatment efficiency of biological systems. It measures the amount of oxygen consumed over a five-day period by a population of microorganisms in stabilizing a sample of wastewater. Complete biochemical oxidation of a waste theoretically takes an infinite time, although the process is usually 95 to 99 percent complete within a 20-day period. In the five-day period used for the BOD_5 test, approximately 60 to 70 percent of the total or ultimate BOD is generally exerted.

As the BOD_5 test requires five days to run, it is obviously impractical to use as a parameter for control of many biological treatment systems which may have a total retention time of only a matter of hours or a few days. For this reason, the COD test, which provides a rapid determination of the waste strength, has gained considerable popularity in recent years as a control parameter for waste treatment systems. Its measurement will indicate a change in influent waste conditions or treatment plant upset, thus enabling appropriate corrective action to be taken long before the BOD_5 test results are available.

Although the BOD_5 test has limited applicability for process control, it has been used for many years to assess treatment performance "after the fact". Because of its widespread popularity it will undoubtedly continue to be used for many years to come.

The residual BOD_5 of the final effluent, which was not removed in the treatment process, imposes an oxygen demand on the aquatic environment to which it is discharged. If the oxygen demand of the final effluent is too high, it will reduce the dissolved oxygen concentration in the receiving body to a level which may endanger some aquatic life.

In a biological treatment plant, this oxygen requirement is usually met by means of artificial aeration. Air is fed to the wastewater by a number of methods which will be discussed in Sections 3 and 4.

The organic loading rate, a parameter which is used extensively in designing the biological reactor stage of the treatment process, is frequently expressed in terms of kilograms of BOD_5 applied per day. It can be calculated by multiplying the BOD_5 concentration of the waste by its flow rate.

3) Suspended Solids (SS). Suspended solids concentration is a measure of the amount of undissolved material that is retained on a 0.45 micron filter during laboratory filtration of a wastewater sample. Suspended solids are composed of both organic and inorganic material. The organic fraction is referred to as volatile suspended solids (VSS).

In most food processing wastewaters, the greater percentage of suspended material is organic in nature. As such, suspended solids constitute a significant portion of the total BOD_5 load, and must therefore be removed from the waste prior to discharge. In addition, they may create aesthetic problems of turbidity and the formation of sludge banks in tranquil areas of a receiving body.

Suspended solids concentration is used as a parameter to monitor the effectiveness of solids removal equipment such as screens, flotation cells and clarifiers in the waste treatment system.

4) Fat, Oil and Grease. Wastewaters from many sectors of the food processing industry, particularly meat and poultry processing, dairy, and edible oil operations, contain relatively high concentrations of oil and grease. If not removed in a pretreatment step, excessive concentrations of oil and grease may interfere with subsequent stages of the treatment process.

Floatable greases may form a scum on the surface of primary sedimentation tanks which, if not removed, will overflow to the biological reactor. Here, it may interfere with oxygen transfer by again forming a scum in suspended growth systems or by coating the biomass with a film of grease in fixed-film systems. Emulsified oil and grease exerts a high BOD_5 and may contribute to organic overloading of the process.

Where such problems are anticipated, it is advisable to pretreat the waste by means of physical-chemical methods such as grease traps or flotation for oil and grease removal.

5) Nitrogen (N). Nitrogen may be present in food processing wastewaters in a variety of forms, although in the raw waste, the majority usually occurs as organic nitrogen (plant and animal protein) or ammonia. As shown in Figure 1, aerobic bacteria are capable of oxidizing ammonia to nitrites and nitrates which can be utilized by plants and microorganisms as nutrients for growth. Under anaerobic conditions, a group of denitrifying bacteria reduce the nitrates to nitrites and eventually to nitrogen gas.

Wastewater analyses for nitrogen usually report the form in which the nitrogen occurs (i.e., ammonia, nitrate, nitrite). Nitrogen analyses are reported as total kjeldahl nitrogen concentrations. When reported in conjunction with the ammonia nitrogen value, the organic nitrogen concentration can be calculated by subtraction.

As will be discussed in Section 3, sufficient nitrogen must be present in the wastewater to enable the microorganisms responsible for the breakdown of organics to multiply and grow. If the waste is nitrogen deficient, then nitrogen must be added as ammonia or an ammonium salt.

Excessive concentrations of ammonia have been related to the toxicity of some food processing effluents to rainbow trout. In such cases, it may be necessary to nitrify the effluent (i.e., oxidize the ammonia to nitrates and nitrites) or strip the ammonia to render the waste non-toxic, prior to discharge.

Furthermore, the discharge of effluents containing significant concentrations of ammonia can result in the exertion of an additional oxygen demand as the ammonia is oxidized to nitrates in the receiving body. The predominance of nitrate nitrogen in an effluent indicates that the waste has been well stabilized with regard to oxygen demand.

The nitrogen content of the waste can also be of significance in the operation of secondary clarifiers. A certain amount of nitrification (conversion of ammonia to nitrites and nitrates) usually occurs in the aerobic biological stage of the treatment process. Prolonged detention of settled sludge in the secondary clarifier causes the creation of anaerobic conditons in which denitrification of the nitrates and nitrites can occur. The nitrogen gas bubbles, formed in the sludge layer of the clarifier, attach themselves to the sludge causing it to rise and float on the liquid surface. This results in the loss of appreciable amounts of suspended solids to the final effluents.

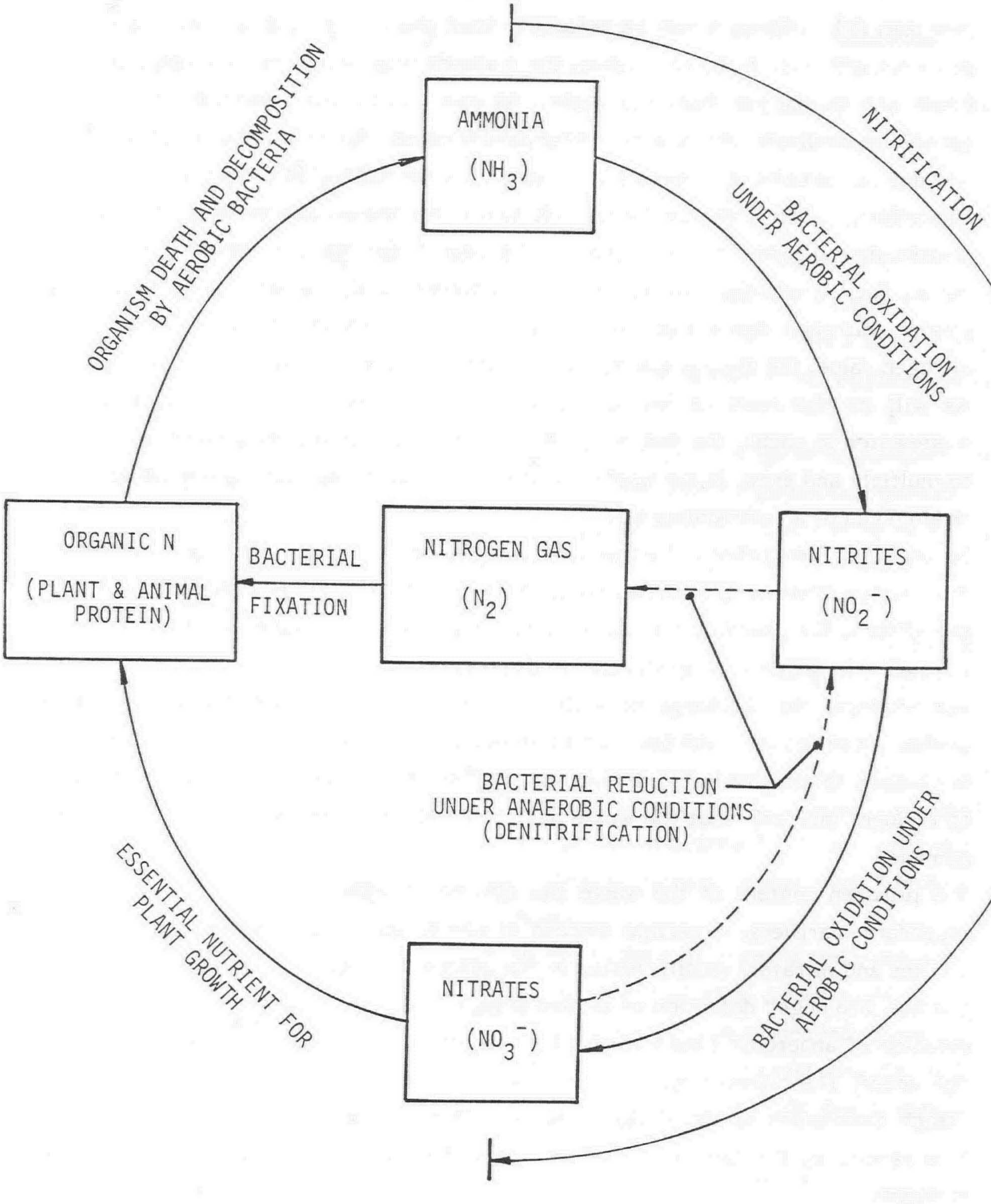

FIGURE 1 THE NITROGEN CYCLE

6) Phosphorus (P). As is the case for nitrogen, phosphorus is an essential nutrient for the growth of plants and microorganisms. It too must be present in sufficient concentration to enable the microorganisms in the biological reactor to stabilize the organic compounds in the waste. If sufficient phosphorus is not available, it must be added to the wastewater stream. It is frequently added in the form of phosphoric acid or ammonium phosphate, although some plants have found that the use of phosphate-containing detergents for plant cleanup provides sufficient quantities of this nutrient for successful treatment plant operation.

   Phosphorus occurs in food processing wastes primarily as inorganic phosphates, although some organic forms of phosphorus are also present. Phosphorus has gained widespread attention in recent years as a principal nutrient contributing to the eutrophication of lakes and rivers. It is for this reason that some regulatory agencies now specify maximum limits for the discharge of phosphorus in effluents from wastewater treatment plants. Thus, if it is necessary to supplement the phosphorus concentration of the raw wastes, care must be taken to ensure that only enough is added to enable the biological system to operate effectively.

7) pH. The pH of a wastewater is a measure of the intensity of its acid or alkaline condition. A pH value of 7 is considered neutral. pH values of less than 7 are considered acidic, with the acid strength increasing as the pH decreases. pH values of greater than 7 are considered basic or alkaline, with the intensity increasing as the pH increases.

   As will be discussed in Section 3, biological treatment processes operate most effectively in the pH range of 6.5 to 8.5. Extremely high or low pH values inhibit the activity of the microorganisms resulting in a decrease in treatment efficiency. Biological processes are also very sensitive to rapid pH fluctuations. If extreme pH values occur, neutralization of the waste may be required.

   The pH of a food processing wastewater is highly dependent upon the nature of the actual processing operation. For example, in the fruit and vegetable industry, high pH values in the waste are frequently associated with the lye peeling process, whereas the steam peeling of carrots may yield an acidic effluent with low pH. Acid or caustic washing of bottles in the dairy and beverage industries may have similar effects on effluent pH values.

8) Toxicity. The presence of toxic elements in a wastewater is of concern for two reasons. Firstly, at high enough concentrations they may interfere with the

operation of the treatment process by inhibiting the activity of the microorganisms in the biological stage. This aspect is discussed in further detail in Section 3.3.5. Secondly, the major concern is that a requirement of the federal environmental controls for the various sectors of the food processing industry relates to the toxicity of an effluent to a species of test fish. The presence of excessive concentrations of toxic elements in an effluent will result in non-compliance with federal guidelines.

The toxicity of an effluent is measured by a bioassay test in which fish of specified size and species (usually rainbow trout) are subjected to various concentrations of plant effluent. Fish deaths are observed and recorded at regular intervals for a predetermined period of time, usually 96 hours. At the end of this period, the percent mortality occurring in each diluted effluent concentration is then plotted against the concentration on semi-logarithmic probability paper. The best fit straight line is drawn through the data points and the effluent concentration at which 50% of the test fish would have died is determined. This value is the parameter generally used to express the toxicity of a waste and is referred to as the LC_{50} value or lethal concentration for 50% mortality. It should be noted that the lower the LC_{50} value, the more toxic the waste.

There are a vast number of potential physical, chemical, organic, and inorganic sources of toxicity in food processing wastewaters. Ammonia, sulphides, high or low pH values, excessive concentrations of suspended solids, chlorine and chlorine compounds, heavy metals, and organic biocides can all result in an effluent toxic to rainbow trout. A direct physical and chemical analysis of an effluent to determine all possible sources of toxicity would necessitate an exhaustive, time consuming, and expensive investigation. Besides which, in many cases the specific nature or source of the toxicity is not definitely known. The bioassay test is therefore utilized to detect the presence of all possible toxic compounds in an effluent.

Detailed information on the toxicity of food processing effluents to fish is presented in reference (4).

9) Bacteria and Viruses. Wastewaters from meat, fish, and poultry processing plants may contain certain pathogenic (disease-causing) bacteria and viruses. Salmonella bacteria are of particular concern in such plants. In addition, any food processing plants which combine process wastewater with domestic sewage from the plant may also discharge these potentially harmful pathogens.

The presence of another group of bacteria known as coliforms, which are harmless to humans, is used as an indicator of the presence of pathogenic bacteria. Coliform bacteria are normal residents of the intestinal tract of warm blooded animals. It has been found that if pathogenic bacteria of intestinal origin are present, then coliform bacteria are also present, usually in much greater numbers. Thus, the bacteriological quality of an effluent is usually assessed by determining the concentration of those coliform bacteria present.

The presence of pathogenic bacteria in wastewater does not affect its treatability, but may create disposal problems for the final effluent. These problems can generally be overcome by disinfecting the wastewater with chlorine or another suitable disinfectant (e.g., ozone) prior to discharge.

While disinfection may be required to render the effluent bacteriologically suitable for discharge, it frequently leads to a secondary problem, that of toxicity. Chlorine and the organic chlorine compounds formed during the disinfection process are highly toxic to most forms of aquatic life. To overcome this problem, dechlorination of the chlorinated effluent may be required in cases where the wastewater is to be discharged to an environmentally sensitive receiving body.

2.3.3 Some Considerations in Establishing and Conducting a Wastewater Characterization Program. As will be discussed in Section 2.3.4, wastewater characteristics vary considerably from plant to plant. Consequently, the primary objective of a wastewater charaterization program must be the procurement of sufficient information for the successful design and operation of a treatment facility. In addition, the program provides an excellent opportunity to identify and examine in detail any areas of high water usage or high waste loss in the food processing operation.

As previously discussed, excessive water usage and waste loss invariably result in high operating costs. High waste loss to the sewer system not only results in lost profits due to lost product, but frequently precludes the recovery of the waste as a saleable byproduct. The resultant wastewater must then be treated at a cost which is directly proportional to both the amount and concentration of the waste. Thus, it is obviously desirable from an economic standpoint to identify these areas of high water usage and waste loss, and to explore methods of potentially reducing them.

A wastewater sampling and characterization program should be designed to provide as much information as possible about each source of wastewater within the plant. Where feasible, the wastewater discharge from each major processing operation within the plant should be isolated, its flow measured, and a composite sample of the wastewater taken for chemical analysis. This enables one to determine the percentage of the total load of each major pollutant parameter originating from the various component processes within the plant. This frequently reveals possible means of reducing both water usage and the amount of waste material entering the sewer system.

In addition, flow measurement and chemical analyses should be made of the total combined wastewater stream requiring treatment. It is the characteristics of this stream upon which the design of a treatment facility will be based. This will also serve as a check to ensure that all major discharge sources have been identified. If the wastewater flow and pollutant loading significantly exceeds the sum of the calculated values for the various process streams, it is apparent that another unidentified waste stream exists. A useful approach to locating such unidentified streams is to close off all known sources of waste discharge and trace any remaining flow in the sewer system to its point(s) of origin.

Sampling and flow measurement stations should be located with the following considerations:

1) The locations must be both safe and accessible.
2) The flow should be well mixed and samples should be collected so as to avoid fluid boundaries, corners, scum and sediment.
3) High concentrations of suspended solids and grease in some wastewater streams may cause problems in flow measurement and sampling equipment. Placing the equipment downstream of the screening facilities may prevent this problem.

Samples should be analyzed for the primary chemical, physical and biological parameters discussed in Section 2.3.2. The analyses should be carried out by a qualified laboratory, in accordance with the techniques specified in Standard Methods for the Examination of Water and Wastewater (5). Proper care should also be exercised in the storage and handling of samples between the time they are collected and the time they are analyzed.

The type of bottle in which the sample is collected, the temperature and duration of storage, and the chemical preservatives added to the sample are all important in ensuring that the results of the chemical analysis are truly representative of the wastewater at the time of sampling.

The sampling frequency and number of samples required to properly characterize a wastewater stream can usually be determined by a preliminary survey to assess the variability of its flow and chemical quality. When the results of this survey indicate relatively consistent wastewater characteristics, fewer samples taken at longer intervals will adequately represent the nature of this stream. However, where considerable variation is apparent, such as where slugs of wastewater are intermittently discharged to the plant sewer, considerably more samples taken at a much higher frequency are necessary to accurately establish the maximum, minimum and average values for flow rate and waste concentration.

Two types of samples commonly used in wastewater characterization studies are "grab" and "composite" samples. As the names imply, the former is a single sample taken at a specific time, while the latter is a sample made up of several individual samples taken at intervals for a specified period of time.

Composite samples provide a much more representative picture of the average wastewater characteristics of a given stream. This is particularly true when these characteristics are subject to considerable variation with time. To obtain the most accurate representation of waste or pollutant load discharged over a given period, a composite sample should be taken in such a manner that the individual samples of which it is composed have volume proportional to the flow at the time of sampling. However, in practice, most automatic samplers simply draw individual samples with equal volumes. This is generally of sufficient accuracy for the purposes of most wastewater characterization studies.

An intensive wastewater characterization study will generally last for 5 to 10 days of normal plant operation. In cases where seasonal variations in wastewater characteristics are expected to be significant, intensive sampling programs should be conducted a number of times throughout the year. This is particularly important for food processing plants which process a variety of commodities throughout the year, such as fruit and vegetable processing plants.

Details of sampling and flow measurement techniques and equipment, sample preservation, analytical considerations, and statistical data analysis are beyond the intended scope of this manual. The reader is referred to Reference (6) for detailed information on the planning and execution of a wastewater characterization study.

2.3.4 Typical Characteristics of Some Food Processing Wastewaters A great number of wastewater characterization studies have been carried out in many sectors of the food processing industry and are reported in the literature. The range in wastewater characteristics and water usage quoted within each industry sector varies greatly from one plant to another, and within the plant itself, depending on production capacity, the commodity being processed, and the technology being used.

The data presented in this section is not intended to provide a definitive characterization of food processing wastewaters. Rather, it will serve to illustrate why average wastewater characteristics for an industry sector cannot be used for design purposes and will emphasize the need for a comprehensive waste characterization program as the first step in any treatment system evaluation.

Some typical wastewater characteristics reported for the major food processing industry sectors in Canada are presented below.

1) Meat and poultry processing plants (including rendering plants). Wastewater from meat and poultry processing and rendering originates as fluming water and from the washing of equipment, floors and carcasses. It is typically high in BOD_5, suspended solids, oil and grease, and ammonia. Some water usage figures and wastewater characteristics for the industry are reported in Table 1.

2) Dairy and milk processing. Dairy wastes are constituted primarily of diluted milk originating from spillage, wastage of spoiled products, and washing of tank trucks, cans, containers, and equipment. Byproducts, such as whey from the processing of cheese, may also be discharged either intentionally or accidentally to the plant sewer. Since this results in extremely high waste loadings, as well as the loss of valuable byproduct, every effort should be made to prevent the loss of such material.

   Due to the high organic strength of milk and its byproducts, BOD_5 is the parameter of principal concern in dairy effuents. However, suspended solids and oil and grease are also frequently present in significant concentrations. Excessive amounts of oil and grease in the plant effluent is usually indicative of significant losses of butterfat in the processing operation. Since this represents a loss of valuable byproducts, housekeeping operations should be reviewed in an attempt to discover improved means of recovering this material.

   Table 2 provides information on water usage and typical BOD_5 and suspended solids concentrations in raw wastewaters from the various sectors of the Canadian dairy industry.

3) Fruit and vegetable processing. The fruit and vegetable processing industry is characterized by a diverse range of raw commodities and finished products. As the availability of products is highly seasonal, most plants process a number of commodities throughout the year.

   Since wastewater characteristics are highly dependent upon both the commodity being processed, and the processing technology employed, effluent quality also tends to vary significantly on a seasonal basis within a plant, as well as from plant to

TABLE 1 CHARACTERISTICS OF SOME CANADIAN MEAT AND POULTRY PROCESSING AND RENDERING WASTEWATERS (7)

Industry Sector	Water Usage (m^3/tonne FP)	BOD$_5$ mg/L (kg/tonne FP)	Susp. Solids mg/L (kg/tonne FP)	Grease mg/L (kg/tonne FP)	Kjeldahl N mg/L (kg/tonne FP)	Phosphate mg/L (kg/tonne FP)	pH	Temp. ($^{\circ}$C)
Red Meat Slaughtering	3-27	200-6000 (1.5-25)	750-5000 (0.6-22)	800-2200 (0.2-20)	30-300 (0.2-2.2)	- (ND-1.3)	5.5-8.5	15-38
Red Meat Processing	10-16	200-1200 (0.2-24)	100-1500 (0.1-12)	10-550 (0.1-8)	ND-10 (0.6-9.0)	ND-100 -	6.5-8	21-32
Poultry Slaughtering	18-30	400-600 (10-20)	200-400 (5-25)	150-250 (4-18)	5-300 -	- (0.1-3)	6.5-9	21-32
Poultry Processing	15-100	100-2400 (4-32)	75-1500 (1-25)	100-400 (1-16)	50-100 (1-15)	- (0.1)	6-9	21
Rendering	1-28	100-30 000 (1-22)	300-4000 (0.03-8)	200-7000 (0.01-15)	60-100 (0.1-1.3)	- (ND-0.4)	6-9	-

Note: FP denotes finished product.
ND denotes non-detectable.

TABLE 2 CHARACTERISTICS OF SOME CANADIAN DAIRY AND MILK PROCESSING WASTEWATERS (8)

				BOD_5		SUSPENDED SOLIDS	
	Number of Plants	Water Usage (L/tonne ME)		Conc. (mg/L) Range	kg/tonne ME Range	Conc. (mg/L) Range	kg/tonne ME Range
Product	Surveyed	Range	Average	(Average)	(Average)	(Average)	(Average)
Fluid Milk	11	1210 - 9150	4740	150 - 5200 (1370)	0.75 - 7.43 (3.8)	295 - 1050 (458)	0.59 - 2.42 (1.4)
Butter and Powdered Products	8	470 - 3210	1540	460 - 3260 (1413)	0.53 - 8.78 (1.4)	165 - 175.4 (572)	0.19 - 1.45 (0.5)
Cheese	9	790 - 5900	3190	760 - 5270 (2170)	2.12 - 8.48 (5.1)	160 - 2250 (709)	0.72 - 2.51 (1.3)
Ice Cream	7	330 - 4230	1780	2400 - 6530 (3470)	0.85 - 21.3 (6.4)	500 - 3100 (1120)	0.22 - 11.0 (2.36)
Condensed and Evaporated Products	4	370 - 2590	1450	1070 - 3040 (1750)	0.99 - 4.40 (2.2)	45 - 1670 (644)	0.08 - 1.4 (0.58)

Note: ME denotes Milk Equivalent.

plant. However, in general, the major sources of waste are: raw material transport and wash water, wastage of spoiled products, spillage, cooling water, and processing water used in cleaning, peeling, trimming and blanching operations.

Data on water usage and wastewater characteristics are presented in Table 3 for selected commodities in the fruit and vegetable processing industry. The two parameters of principal concern are BOD_5 and suspended solids. Extremely variable pH values in fruit and vegetable wastes can also be of significance when considering biological treatment. The use of caustic peeling operations can result in relatively high pH values, while the steam peeling of carrots, for instance, can create low pH or acidic conditions in the wastewater. Nutrient deficiency is another problem which must frequently be dealt with when considering biological treatment of fruit and vegetable wastewaters.

4) Beverage industry. The beverage industry includes breweries, distillieries, wineries, and soft-drink producers. As the processes and raw materials associated with each sector of the industry vary significantly, so do raw wastewater characteristics.

In the brewing of beer and ale, wastewater may be generated from the steeping of grain, the separation of spent grain from the mash, spillage, cooling water, and the washing of bottles, floors, and equipment.

In the distilling industry, the majority of the organically contaminated wastewater originates as still bottoms. Other sources include cooling water and water used for the washing of bottles, floors and equipment.

Winery waste strengths vary signficantly on a seasonal basis. The equipment wash water discharged during the grape crushing season can reportedly increase the total effluent BOD_5 concentration 20-fold. During non-crushing periods, most wastes result from racking, bottling, and tank cleaning operations.

Brewery, distillery and winery wastewaters are usually high in BOD_5 and suspended solids and can exhibit widely fluctuating pH values. They are generally nutrient deficient but when mixed with domestic wastes or when nutrient supplemented are readily amenable to biological treatment.

Wastes from the soft-drink industry originate primarily from the washing of equipment, bottles and spillages. They may contain appreciable amounts of dissolved organics in the form of sugars.

Detailed survey information on waste charactreristics in the Canadian beverage industry does not appear in the literature as the majority of these plants are located

TABLE 3 WASTEWATER CHARACTERISTICS FOR SELECTED COMMODITIES IN THE FRUIT AND VEGETABLE PROCESSING INDUSTRY (9)

Commodity	No. of Plants Surveyed	Water Usage (m^3/tonne)		BOD_5				Suspended Solids			
				Concentration (mg/l)		Load (kg/tonne)		Concentration (mg/l)		Load (kg/tonne)	
		Range	Log Mean	Range	Log Mean	Range	Log Mean	Range	Log Mean	Range	Log Mean
Apple Products	7	1.8-27	6.9	660-3200	1400	3.9-25	10	14-250	60	0.39-1.45	0.75
Peaches	15	6.2-25	12.5	750-1900	1200	9.5-25	15	160-1000	410	2.2-8.4	4.3
Pears	9	6.7-27	13.4	1300-2700	1900	13-53	26	220-510	330	2.0-140	5.4
Cherries	7	6.6-25	12.8	510-2200	1100	7.4-25	14	45-120	73	0.45-1.65	0.86
Plums	3	3.2-5.3	4.1	800-1400	1100	3.5-5.5	4.4	40-160	81	0.18-0.61	0.34
Corn	14	2.0-23	6.7	680-5300	1900	8.2-20	13	180-1800	570	2.0-8.7	4.2
Peas	30	9.3-61	24	270-2400	800	8.5-43	19	79-670	230	2.5-12	5.4
Green Beans	21	8.5-24	14	130-380	220	1.8-5.6	3.2	86-380	180	1.1-6.1	2.6
Beets	9	3.2-18	7.6	1400-9700	3700	20-39	28	370-4900	1350	5.0-18	9.6
Carrots	6	5.8-26	12.2	640-2200	1180	11-20	14.5	260-1500	640	2.8-21.5	7.8
Tomatoes	17	5.5-16	9.2	300-780	490	3.2-6.8	4.7	280-1280	600	2.9-13.2	6.2

NOTE: Maximum and Minimum Values quoted in ranges are not the absolute values of the data sets, but statistical values equal to one standard deviation above and below the log mean, respectively.

within urban centres and discharge their wastes to municipal systems. This extensive use of off-site treatment facilities has precluded the necessity for provincial and federal pollution control agencies to carry out industry wide wastewater characterization studies.

5) Edible oil processing. This sector of the food processing industry involves the extraction of oil from materials such as rapeseed, corn, peanuts, and soy beans for the production of margarine and other edible oils. As with the beverage industry, only limited data has been collected on water usage and wastewater characteristics in the industry, and is not available for presentation here.

6) Fish and seafood processing. The Canadian fish and seafood processing industry encompasses a diverse range of commodities and finished products. It includes the processing of groundfish, shell fish, canning of salmon and herring, fish meal production, and the processing of some freshwater species such as perch and smelt.

   Sources of water use which result in the production of liquid effluent in processing plants are flume water, equipment and floor wash water and descaling, filleting, trimming and cleaning operations. The waste is generally high in both BOD_5 and suspended solids.

   In fish meal plants, the two highly concentrated organic waste streams which contribute the majority of the organic and suspended solids load are the bloodwater and stickwater streams. The former is the seepage which results from the storage of offal or whole fish prior to processing, while the latter is the residual liquid left after centrifuging the cooked liquor for removal of oils.

   The characteristics of some fish and fish meal processing plant wastewater streams are summarized in Table 4.

2.4 Evaluation of Alternative Treatment Methods.

An experienced engineer or engineering firm should be retained to assess the feasibility and cost-effectiveness of using alternative wastewater treatment methods. In the majority of cases, professional engineering services will have been retained at an early stage to assist with the data collection and wastewater characterization studies.

Where a treatment facility for a new plant is being considered, the engineer must synthesize the wastewater quantity and quality characteristics, since the wastewater flow streams would not yet exist. This entails a breakdown of every source of wastewater within the plant and a careful assessment of its anticipated waste load, based on the experience of similar processing operations in existing plants. Because of the many

TABLE 4 CHARACTERISTICS OF FISH, SEAFOOD AND FISH MEAL PROCESSING WASTEWATER (10)

Commodity	Average Water Usage (m^3/tonne Landed)	BOD_5			Suspended Solids			Oil		
		Concentration (mg/l)		Average Load (kg/tonne Landed)	Concentration (mg/l)		Average Load (kg/tonne Landed)	Concentration (%)		Average Load (kg/tonne Landed)
		Range	Average		Range	Average		Range	Average	
Groundfish (Wetline Process)	5.0	600-1,200	1,140	15	150-960	490	7	0.02-0.15	0.09	13
Groundfish (Dryline Process)	5.0	100-1,100	455	5	30-230	135	1	0-0.05	0.01	1
Lobster Processing	2.6	840-1,200	1,000	26	140-170	160	4	0.01-0.08	0.03	5
Crab Processing (Fresh) (Salt)	7.0 5.4	320-1,000	680	40	135-660	300	19	0.01-0.09	0.03	21
Herring Filleting	6.0	3,200-5,800	3,900	22	1,150-5,300	3,000	21	0.02-0.3	0.12	10
Marinated Herring	2.5	6,900-14,000	9,000	215	1,500-4,600	3,400	85	0.08-0.5	0.25	83
Fish Meal Bloodwater	-	190,000 -315,000	245,000	-	4,200 -21,000	12,000	-	0.25-0.3	0.27	-
Fish Meal Stickwater	-	46,000 -490,000	199,000	-	7,600 -21,500	15,500	-	0.01-0.05	0.03	-

problems inherent in attempting to use wastewater characteristics from one plant to estimate those in another plant, it is imperative that a careful analysis be conducted only by personnel very familiar with the specific food processing industry and the characteristics associated with its wastewaters. The design engineer should, in addition, be knowledgeable and experienced in all aspects of wastewater treatment and disposal, including biological treatment, physical-chemical treatment and land application.

At the preliminary or pre-design stage, the engineer should investigate the feasibility of a number of treatment alternatives. The choice of alternatives will be affected by many factors such as:

1) raw wastewater characteristics,
2) effluent standards,
3) land availability,
4) proximity to residential and commercial areas,
5) capital and operating costs,
6) ease of operation.

Two popular treatment options frequently used in place of, or in conjunction with biological treatment, with which the reader should be familiar, are physical-chemical treatment and land application. These are discussed in detail in references (1) and (2).

At the pre-design stage, the engineer should prepare estimates of both capital and operating costs for all treatment alternatives considered technically feasible for treatment of the specific wastewater under consideration. Detailed design criteiria should then be established for those treatment methods which appear most economically attractive. This may involve some bench and/or pilot-scale testing to determine the number and size of components required for some treatment techniques. Using these design criteria, more accurate estimates of capital and operating costs can then be made, enabling the most cost-effective treatment alternative to be identified.

The period over which capital and operating costs are considered will have a significant impact upon the economic analysis. High capital cost, low operating cost alternatives are generally more attractive over longer periods (i.e., 20 to 25 years), while low capital cost, high operating cost alternatives generally result in lower total costs when assessed over relatively short periods (i.e., 5 to 10 years). For this reason it is important to have a relatively accurate estimate of the projected lifetime of both the processing plant and treatment facility. A present-value analysis should be undertaken to compare alternatives, and the financial analysis should include opportunity for phasing and potential government financial assistance programs.

The final selection of a treatment process will be based primarily on cost. However, in cases where two or more alternatives appear capable of providing an equivalent level of treatment at comparable cost, other advantages and disadvantages should be evaluated in selecting the optimum treatment system. Some of these are:

1) ease of operation,
2) potential for development of nuisance conditions (e.g., odours, flies, etc.),
3) suitability for future expansion,
4) risk of system failure,
5) reliability of operation,
6) environmental impact,
7) energy consumption,
8) public health and safety,
9) land use conflicts.

The appropriate regulatory agency should be consulted at this stage to ensure their concurrence with the choice of treatment system.

Once selection of the treatment system is made, the design engineer begins preparation of final plans and specifications for construction. Typical site information which must be obtained at this stage includes:

1) ground elevations,
2) existing property lines,
3) location of sewers and determination of invert elevations,
4) availability of utilities and electrical service,
5) subsoil information.

An overall site layout is then developed showing the location of treatment units, utilities, and sewer outfall lines. The layout should provide for future expansion and upgrading of the facility with a minumum of disruption to the treatment system, once installed. Final plans and specifications are then prepared and submitted to the provincial regulatory body for approval. Any changes required by the agency must be incorporated into the design prior to construction.

If the approach described in this section is carefully followed, a minimum of difficulty should be encountered in procuring a cost-effective treatment system for food processing wastewaters. Senior plant management's recognition of its reponsibility for environmental protection is the primary prerequisite for institution of an effective wastewater management program. Once this is accepted, the selection, design, and approval of the wastewater treatment system should proceed as a matter of course in the fulfillment of regulatory agency requirements.

3 FUNDAMENTALS OF BIOLOGICAL TREATMENT

3.1 Introduction

Various biological processes have been used successfully in the treatment of industrial wastewaters. The effective control of any biological treatment system requires a basic understanding of the fundamentals of biological reactions in a wastewater treatment facility and the key factors affecting the biological activities in such a system. This section of the manual will present a discussion of these fundamentals and a review of associated unit processes: aeration and secondary clarification.

3.2 Basic Fundamentals of Microbiology

In a biological treatment system, polluting materials in a wastewater, such as dissolved organic compounds and colloidal (non-settleable particulate) material, are used by microorganisms (commonly referrred to as "bugs", biomass, or microbes) as a source of food for growth. As the organisms grow, they convert this material into carbon dioxide, water, and new cellular material (or sludge). The sludge can then be removed from the wastewater by settling and the liquid effluent, with contaminants removed, is discharged from the treatment plant.

If a vessel is filled with a mixture of raw wastewater and a pre-conditioned mass of microorganisms (activated sludge), the organisms begin to feed on the polluting organic material (substrate). The breakdown of the substrate by the microorganisms results in a decrease in substrate concentration with time, accompanied by a corresponding increase in cellular material as illustrated in the growth curve shown in Figure 2.

The lower portion of the growth curve is called the logarithmic growth phase. During this phase, maximum multiplication of microbial cells is taking place due to the presence of an abundant food supply. As growth progresses, the substrate concentration gradually decreases. As the growth rate becomes limited by the availability of substrate, a declining growth phase occurs. Following depletion of the food source, microbial cells begin to die and are consumed by the remaining viable microorganisms. This phase, referred to as the endogenous or auto-oxidation phase results in the reduction of microbial mass or sludge.

In some cases a lag phase may exist before the log-growth phase. This is the period in which the microorganisms are adjusting to a new food source or a new environment.

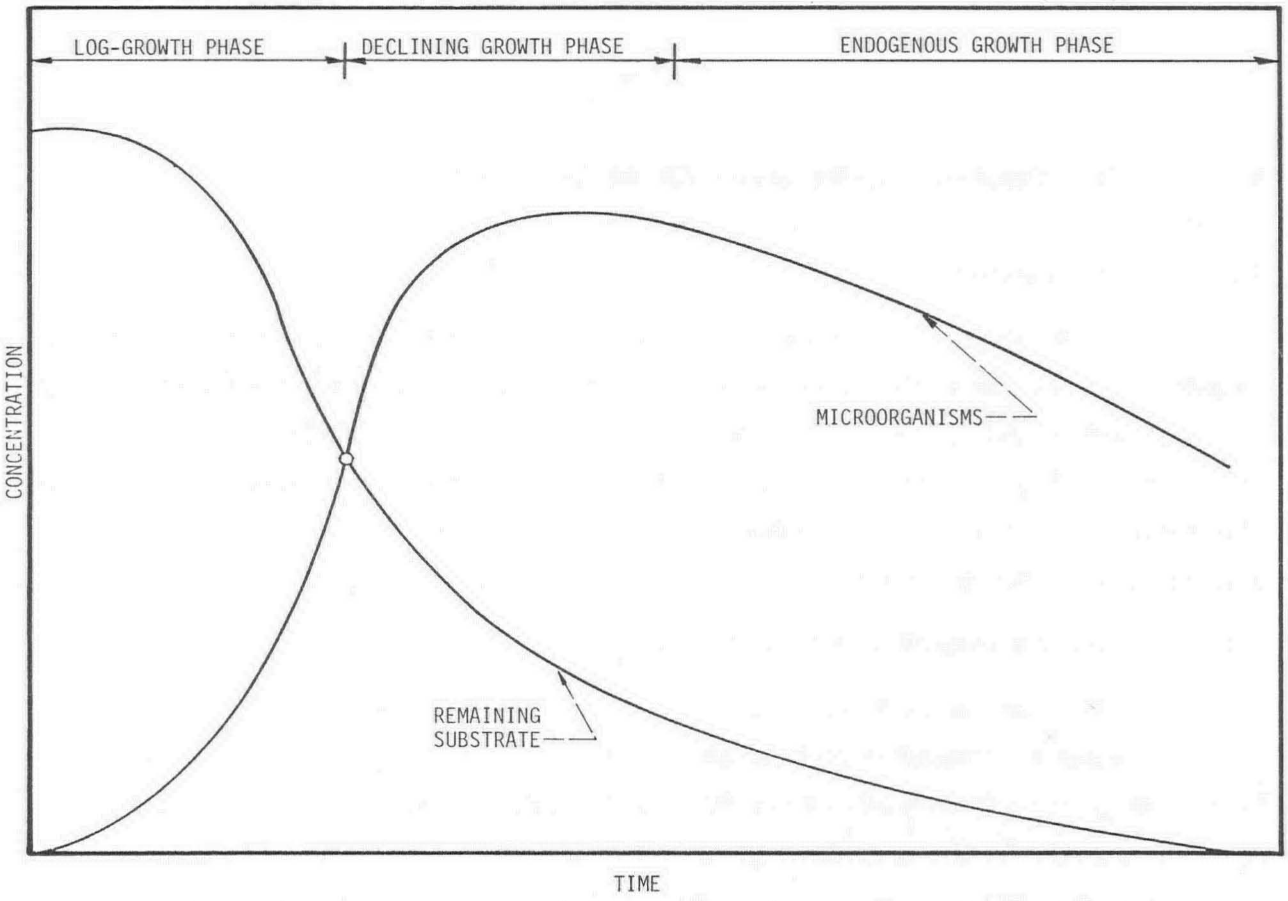

FIGURE 2 SUBSTRATE REMOVAL AND MICROBIAL GROWTH RELATIONSHIPS

In a typical biological treatment system, raw wastewater enters either an open or closed tank or basin where it is retained for a defined interval of time referred to as the hydraulic retention time. It is during this time that the process of breakdown and removal of pollutants by the microorganisms occurs. The stage on the microbial growth curve (Figure 2) at which the treatment plant is operated, can be maintained by controlling the substrate or organic loading rate (the rate at which food is fed to the microorganisms). As the loading rate increases, the availability of food and consequently the growth rate of microorganisms increases.

All microorganisms involved in wastewater treatment can be classified into three groups according to their ability to use oxygen. Organisms which can only exist when there is a supply of molecular oxygen are identified as strict or obligate aerobes. Those which can only exist in an environment that is completely free of molecular oxygen are referred to obligate anaerobes. Organisms having the ability to survive either with or without the presence of molecular oxygen are called facultative organisms. Biological treatment systems employing aeration to supply molecular oxygen to the microorganisms are idientifed as aerobic processes, while systems using anaerobic microorganisms to bring about biological reactions are called anaerobic processes.

The internal biochemical reactions vary between aerobic and anaerobic processes; hence different end products are produced. While the principle end products of aerobic processes are water, carbon dioxide, nitrate and sulphate, the principle end products of anaerobic processes include methane gas, ammonia, carbon dioxide, sulphides, and various mercaptans. Sulphide compounds and mercaptans are responsible for the foul odours which often emanate from anaerobic treatment systems.

Since the majority of biological processes used for the treatment of wastes from the food processing industry are aerobic, emphasis will be given to the discussion of the activity of aerobic microorganisms.

3.3 Factors Affecting Biological Activity

The four environmental factors of most importance in wastewater treatment, with the exception of substrate concentration, are pH, temperature, nutrient requirements and toxicity. To ensure the highly efficient operation of a biological treatment system, it is essential to provide optimum microbial growth conditions by controlling these factors. For aerobic systems, an additional environmental factor controlling the rate of wastewater treatment is the oxygen concentration.

3.3.1 **pH.** The optimum pH range in a biological system lies between 6.5 and 8.5. Extremely low or high pH may exert inhibitory effects on microorganisms, resulting in a decrease in the efficiency of the treatment process.

Although raw wastewaters may frequently have a pH outside this range, pH adjustment may not be required. For example, in the treatment of alkaline (high pH) wastes the carbon dioxide produced by the microorganisms reacts with the carbonate and hydroxide to form bicarbonate which buffers the system at a pH of approximately 8.0. A well-buffered system is able to resist pH changes.

The use of a completely mixed aeration cell minimizes the effect of fluctuating pH levels in the influent waste and provides a well balanced system with maximum buffering capacity. Where the buffering capacity of the system is not sufficient to maintain a pH within the acceptable range, pH adjustment will be required. Lime and soda ash are frequently used to increase pH, while carbon dioxide and mineral acids can be added to decrease pH.

3.3.2 **Temperature.** Microorganisms display a wide variety of responses to temperature and are classified into three groups according to the temperature range in which they function best. In general, bacteria that grow best at lower than 20°C are identified as psychrophiles. Microorganisms which prefer to grow at temperatures greater than

45°C are called thermophiles. Those growing best in the temperature between 20° and 45°C are referred to as mesophiles.

The optimum temperature for most microorganisms involved in wastewater treatment is 35°C. The relationship between growth rate and temperature for this group of microorganisms is presented in Figure 3. It is generally recognized that the rate of growth doubles with every 10°C increase in temperature until some limiting temperature is reached.

Microbial activity decreases with temperature and as temperatures approach the freezing point, the rate of growth and biological reactions become very slow. Treatment plant design should be based on wastewater temperatures encountered in the winter months rather than summer operating temperatures.

3.3.3 Nutrient Requirements. Optimum microbial growth is dependent on the availability of essential nutrients. In addition to carbon, microorganisms require nitrogen, phosphorus, sulphur, iron, calcium, magnesium, potassium, manganese, copper, zinc and molybdenum. If these elements are not present in the required concentration, they must be added to the wastewater to provide a balanced nutrient level for growth.

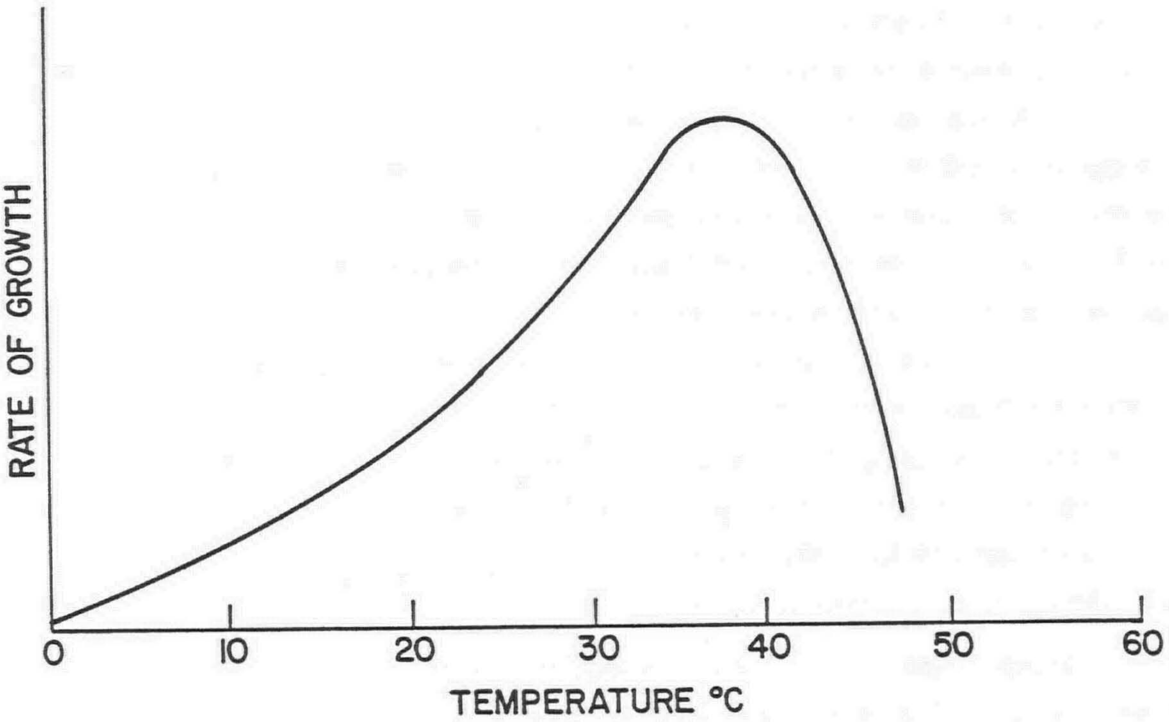

FIGURE 3 EFFECT OF TEMPERATURE ON MICROBIAL GROWTH RATE OF MESOPHILES

The two most critical elements and those which are frequently deficient in food processing wastewaters are nitrogen and phosphorus. To encourage the growth of a desirable microbial population in a biological treatment system, it is commonly considered advisable to maintain a BOD_5:N:P ratio of 100:5:1. Failure to maintain a balanced nutrient level could result in operational problems such as reduced treatment efficiency and profuse growth of undesirble filamentous microorganisms in the treatment plant, as will be discussed later.

For large treatment plants, nutrients are normally added in the form of aqueous or anhydrous ammonia, and phosphoric acid. For smaller plants, anhydrous ammonia and ammonium phosphate are frequently used.

3.3.4 Oxygen Concentration. Aerobic biological processes require the maintenance of at least 1.0 mg/L of dissolved oxygen throughout the biological reactor. In activated sludge processes where high biological solids concentrations are maintained, a dissolved oxygen level of 2.0 -3.0 mg/L is preferrable. If dissolved oxygen levels fall below 0.5 mg/L facultative bacteria operate on the anaerobic cycle thereby reducing biological treatment rates and creating poorly settleable sludge.

In lagoon systems, dissolved oxygen levels vary from near zero at the bottom of the pond to supersaturated conditions at the top during periods of intense sunlight and high algal growth.

It is important in the design of the biological treatment facilities to ensure that a 1.0 mg/L dissolved oxygen residual is available in the effluent to minimize the immediate oxygen demand on the receiving stream.

3.3.5 Toxic Substances. Although not usually a problem, some food processing wastes may contain substances which have a toxic effect on biological processes. These substances may cause either a direct poisoning of the microbes by interference with the intracellular reactions or the inhibition of the extracellular reactions responsible for the breakdown of the waste material. Some of the compounds responsible for toxicity in biological treatment processes include phenols, cyanide, sulphide, ammonia, and heavy metals (lead, copper, nickel and zinc). Generally, if the concentration of the toxic compound is greater than that which can be tolerated by the microorganisms, the wastewater should not be treated in a biological system. Concentrations at which inhibitory effects on biological treatment processes have been observed are presented in Table 5 for a number of toxic substances.

TABLE 5 CONCENTRATIONS OF VARIOUS TOXIC SUBSTANCES WHICH EXHIBIT INHIBITORY EFFECTS ON BIOLOGICAL TREATMENT PROCESSES (11)

	Concentration[1], mg/L	
Toxic Substance	Aerobic Processes	Anaerobic Digestion
Ammonia	*	1500[2]
Sodium	*	3500
Potassium	*	2500
Calcium	*	2500
Magnesium	*	1000
Acrylonitrite	*	5.0[2]
Benzene	*	50[2]
Carbon Tetrachloride	*	10[2]
Chloroform	18	0.1[2]
Methylene Chloride	*	1.0
Pentachlorophenol	*	0.4
1, 1, 1 Trichloroethane	*	1.0[2]
Trichlorotrifluoromethane	*	0.7
Trichlorotrifluoroethane	*	5.0[2]
Cyanide (HCN)	*	1.0
Total Oil (petroleum origin)	50[3]	50[3]
Copper	1.0	1.0
Zinc	5.0	5.0
Chromium (hexavalent)	2.0	5.0
Chromium (trivalent)	2.0	2000[2]
Total Chromium	5.0	5.0
Nickel	1.0	2.0
Lead	0.1	*
Boron	1.0	*
Cadmium	*	0.02[2]
Silver	0.03	*
Vanadium	10	*
Sulphides	*	100[2]
Sulphates	*	500

---

* Insuffıcent data.

[1] Concentrations refer to those present in raw wastewater unless otherwise indicated.

[2] Concentrations apply to the digestor influent only. Lower values may be required for protection of other treatment process units.

[3] Petroleum based oil concentration measured according to the API Method 733-58 for determining volatile and nonvolatile oily materials. The inhibitory level does not apply to oil of direct animal or vegetable origin.

In most cases, acclimatization of the microbial population to the toxic wastewater will increase the concentration of toxicant which can be tolerated. Toxic effects may also be alleviated by using a completely mixed system in which the influent is diluted with the contents of the biological reactor. Although shock loads with concentrations many times the toxic threshold can be successfully treated in this manner, this should be avoided if at all possible.

3.4 Aeration Equipment

One of the most important components of any aerobic biological treatment process is aeration. Aeration equipment commonly used in biological wastewater treatment systems consists of the following systems: 1) air diffusion devices through which air bubbles are introduced into the wastewater; 2) turbine aeration devices, in which air is released below the rotating blades of an impeller; or 3) surface aeration devices, in which oxygen entrainment is accomplished through surface turbulence.

Two principal differences exist among the above systems. Diffused air and submerged turbine systems accomplish oxygen transfer by bringing quantities of air into contact with the liquid; thus the air is the transported phase. In surface aeration systems, the wastewater acts as the transported phase which is brought into contact with air. As a compromise, there are various submerged turbine devices available which incorporate both air and water transport to achieve oxygen transfer and mixing.

The mixing capability of an aerator is also an important feature of its design and may influence equipment selection. Adequate mixing is needed to keep biological life in suspension and thus maintain physical contact with dissolved oxygen and biodegradable organic material.

The characteristics of each type of aeration equipment are discussed below:

a) Diffused aeration. In the diffused aeration system, air diffusers or injection aerators bubble compressed air into the wastewater through orifices, nozzles in air piping, porous ceramic diffusers, tubes, or spargers. Typical systems are illustrated in Figure 4.

Diffused aeration equipment may be classified as large bubble or small bubble devices. Large bubble devices have the advantage of low maintenance, but have disadvantages such as lower absorption and oxygen transfer efficiencies. Fine gas bubblers obtain a greater absorption efficiency due to increased interfacial area of the small bubbles. However, clogging of the orifices is frequently encountered in fine bubbler diffusers. This problem can be overcome through the use of filtering or cleaning devices on the air intake line of the compressor.

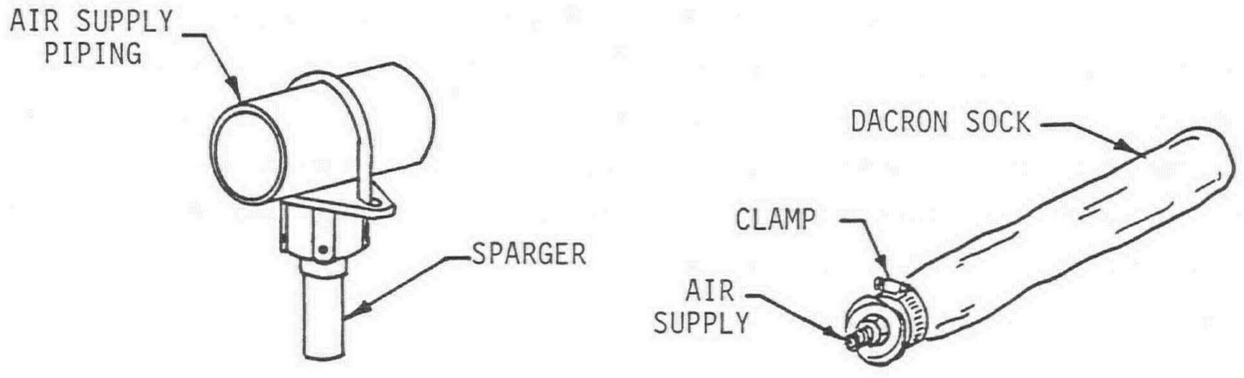

A) SPARGER TYPE AERATOR

B) POROUS DIFFUSER TYPE AERATOR

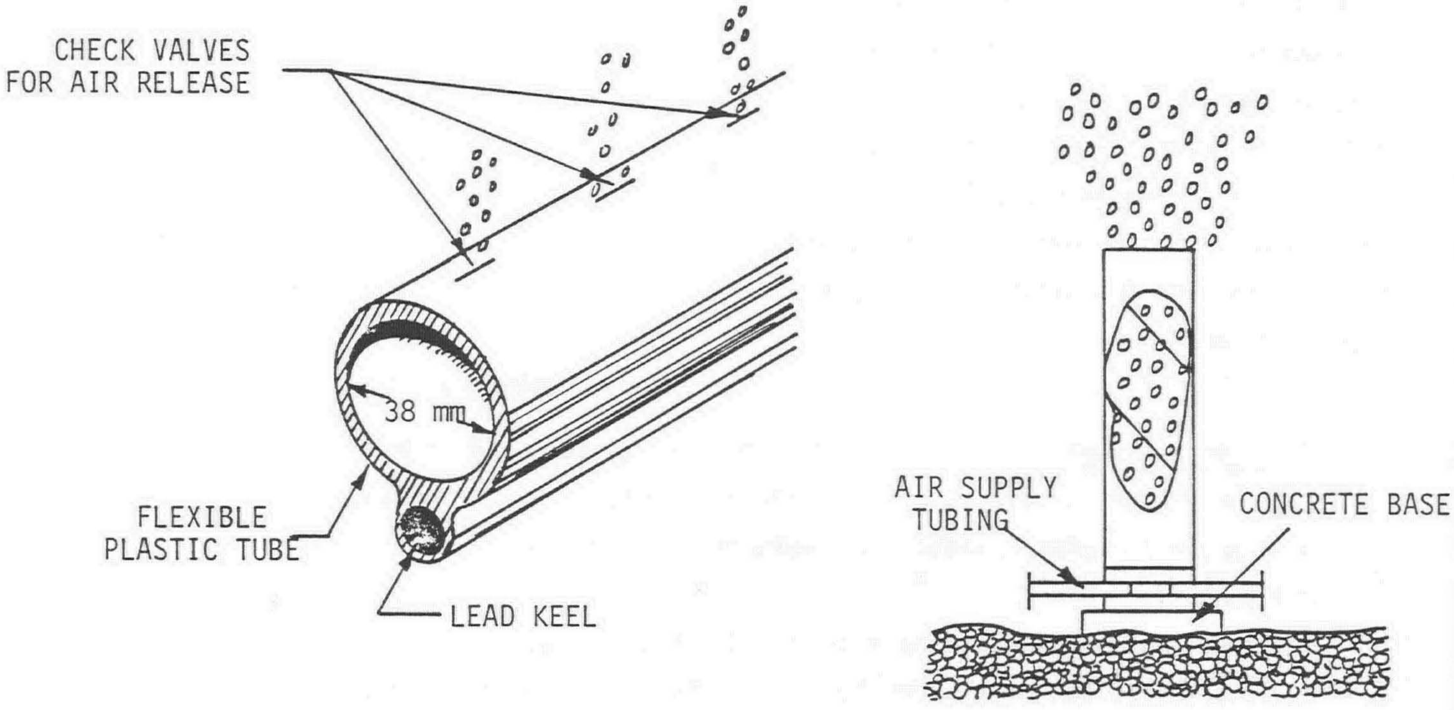

C) PLASTIC TUBE AERATOR

D) HELICAL AERATOR

FIGURE 4 TYPICAL DIFFUSED AERATION SYSTEMS

Variables affecting the performance of diffused aeration units are air flow rate, orifice diameter or diffuser porosity, mixed liquor depth and the aeration tank configuration. Diffusers are located at basin bottoms and spaced at intervals which are dependent upon the type of diffuser in use and the aeration requirements. Oxygen transfer efficiency increases with liquid depth. However, optimum balance between oxygen transfer and mixing is usually achieved at basin depth of 2.5 to 5.0 m (8-16 ft).

Oxygen transfer efficiencies reported in manufacturer's literature generally vary from 0.6 to 2.7 kg of oxygen/kWh (1.0 to 4.5 lb oxygen/hp-h). Fine bubble devices have efficiences which are usually higher than large bubble diffusers.

Standard porous diffuser tubes are normally designed to deliver from 7 to 25 m^3/h (4 to 15 ft^3/min) per unit. Air requirements to ensure good mixing with diffused air systems will generally vary from 1.2 to 1.8 m^3/h per m^3 (20 to 30 ft^3/min/1000 ft^3) of tank volume. To increase exposure time, spiral and cross-current flow patterns have been developed in various diffused air systems to lengthen the travel path of air bubbles through the liquid.

b) Submerged turbine. In turbine aeration systems, compressed air, discharged beneath a submerged rotating impeller, is dispersed by the shearing and pumping action of impeller blades. The mechanical function of the unit is to keep the solids in suspension as well as inject air for oxygen transfer.

While a number of systems are available to achieve these goals, one of the more common arrangements consists of a rotating impeller located above an orifice sparge ring or an open air pipe as illustrated in Figure 5. Air rising from the pipe is dispersed by the impeller and distributed throughout the liquid. The helical aerator illustrated in Figure 4 operates on the same principle, however, a vertical helix is used to disperse the air bubbles in place of a rotating turbine.

Submerged turbine aeration devices fall in an intermediate range for oxygen transfer efficiencies. Oxygen transfer can be varied, independent of mixing, which is a decided advantage for these devices where varying loadings are experienced. The oxygen transfer efficiency of a single impeller submerged turbine is in the range of 1.1 to 1.6 kg of oxygen/kWh (1.7 to 2.5 lb of oxygen /hp-h).

c) Surface aeration. The surface aerator is a device which brings the wastewater to the surface for contact with air. Surface aeration equipment, utilizing a surface impeller device, pumps wastewater from beneath the blades and sprays it across the surface of the liquid, thereby enabling transfer of atmospheric oxygen to the waste.

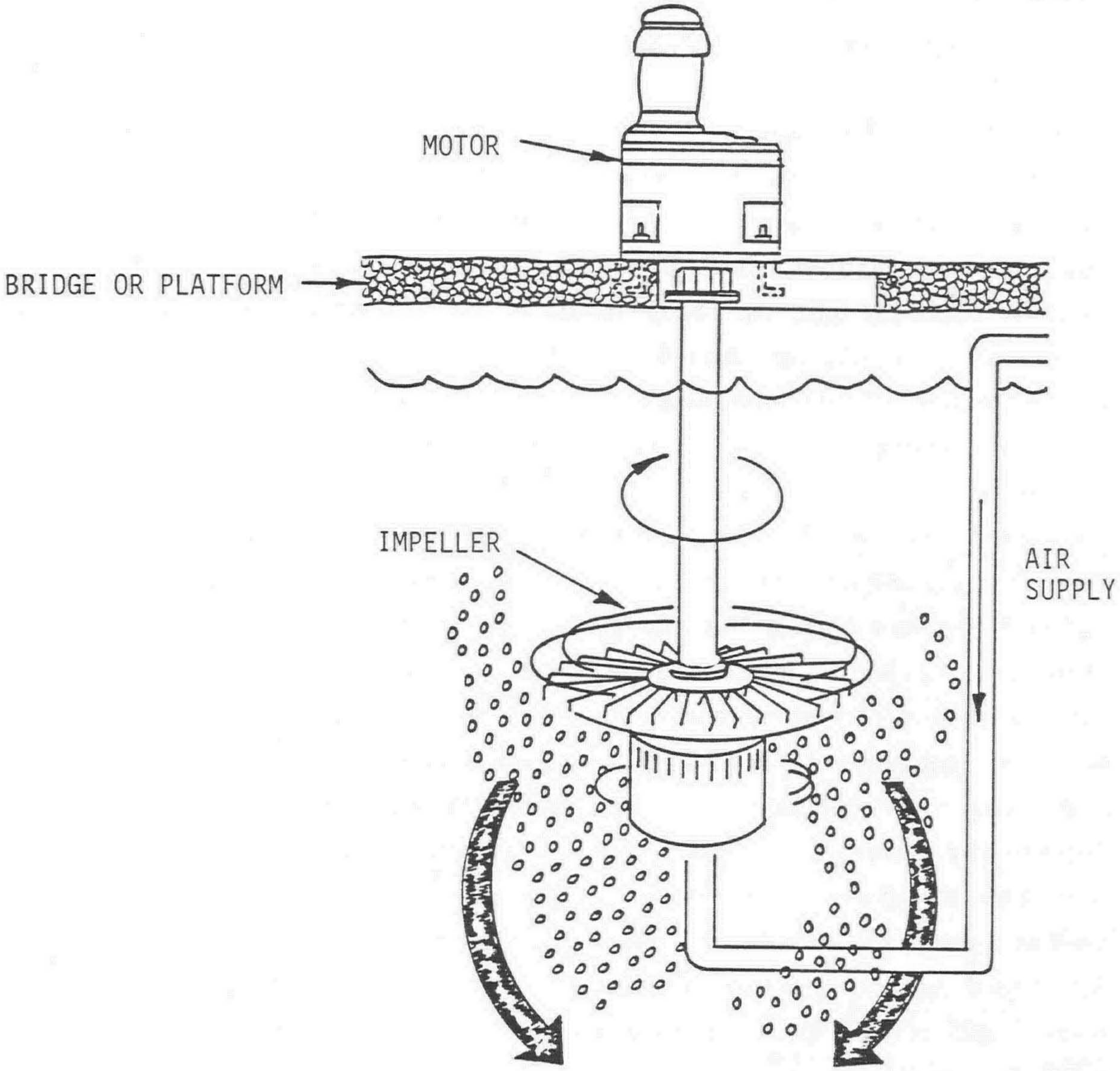

FIGURE 5 TYPICAL SUBMERGED TURBINE AERATOR

An alternate system, the simplex cone aerator, employs a vertical upflow draft tube with an impeller at the top which discharges the mixed liquor over the liquid surface. In this system, the contents of the biological reactor are continuously circulated through the draft tube.

Another device, the brush aerator, utilizes a rotating steel brush to spray liquid from the rotating blades and induce mixing below the rotating element. Oxygen transfer occurs directly as the waste is being sprayed through the air. Figure 6 illustrates the various types of surface aerators in use.

Surface aerators generally provide higher efficiencies than other devices. Oxygen transfer efficiencies of low speed surface aerators range from 1.8 to 2.4 kg oxygen/kWh (3 to 4 lb oxygen/hp-h).

A summary of different types of aeration equipment is presented in Table 6.

3.5 Secondary Clarification

The function of the secondary clarifier or secondary settling tank is to separate the solids produced in the biological treatment units from the liquid effluent. This constitutes the final step in the production of a clarified effluent in a biological waste treatment plant. The process theory and detailed design considerations for secondary clarifiers are dealt with in considerably more depth in the "Physical-Chemical Waste Treatment Manual for Food Processing Wastewaters" (2). The objective of this section is to present some of the factors that should be considered in the design of secondary clarifiers.

A typical upflow secondary clarifier is presented in Figure 7. The critieria of primary importance in the design of secondary clarifiers are outlined below.

a) Overflow rate: The suspended solids in effluent from the biological treatment unit are usually lighter than those contained in raw sewage, and therefore, settle more slowly. To cope with this sludge characteristic, lower overflow rates (less than 25 $m^3/day/m^2$ or 600 gpd/ft^2) and weir loadings (less than 150 $m^3/day/m$ or 10 000 gpd/ft) should be used in the design of secondary clarifiers.

b) Solids loading: Solids loading is defined as the total solids applied per unit surface area of the settling tank. Because the mixed liquor entering the secondary clarifier generally carries a high concentration of biological solids, it is essential to design the clarifier at a solids loading of less than 125 kg/m^2 (25 $lb/ft^2/d$) to prevent the loss of sludges in the effluent. This parameter is not critical in the design of a primary clarifier because the solids concentration in the raw sewage is much lower than that in the mixed liquor.

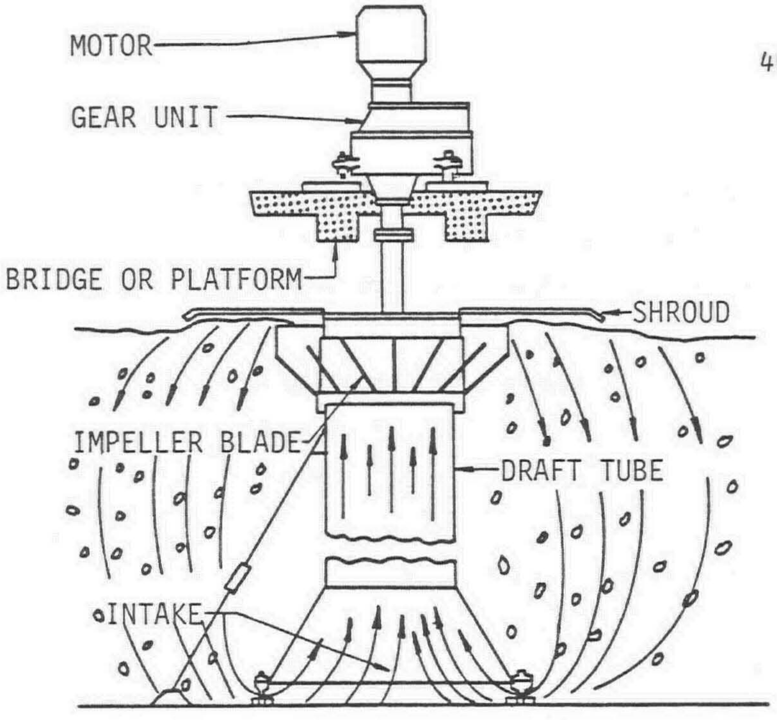

A) DRAFT TUBE AERATOR

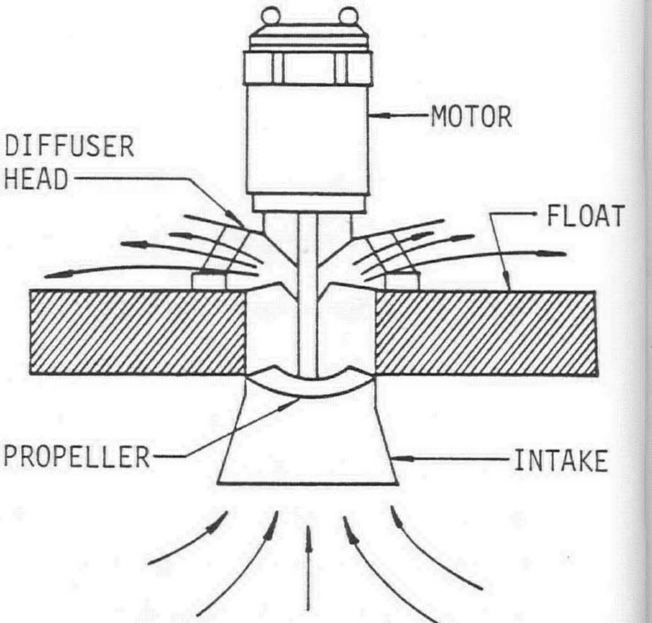

B) FLOATING SURFACE AERATOR (SECT

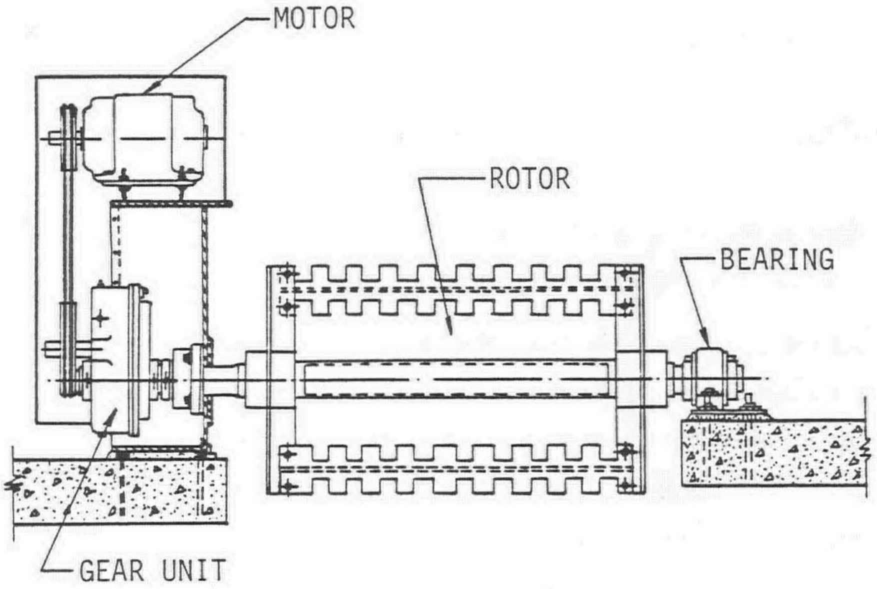

C) CAGE ROTOR (SECTION)

FIGURE 6 SURFACE AERATORS

TABLE 6 TYPES OF AERATION EQUIPMENT (12)

TYPE	DEPTH AT WHICH COMMONLY USED (m)	APPLICATION	ADVANTAGES	DISADVANTAGES
Porous ceramic diffuser with pore size less than 2 mm	1 - 3	Conventional activated sludge, extended aeration, contact stabilization	Good mixing and aeration capabilities	Clogging of pores is affected by iron salts and deposits of sludge sands
Orifice aerator with openings greater than 5 mm	1 - 3	Aerated lagoon	Not affected by floating debris or ice	Low aeration efficiency; calcium carbonate buildup blocks air diffusion holes; is affected by sludge deposits
Rotating turbine aerator	3 - 4.5	Conventional activated sludge, extended aeration	Not affected by ice; good mixing	Potential ragging problem
Helical aerator	2.5 - 4.5	Conventional activated sludge, aerated lagoons	Not affected by ice; good mixing less maintenance	Potential ragging problem
Surface aerator	3 - 4.5	Conventional activated sludge, extended aeration, contact stabilization, aerated lagoon	Good mixing and aeration capabilities; easily removed for maintenance	Ice problems during freezing weather
Simplex aerator cone	3 - 5	Conventional activated sludge, extended aeration, contact stabilization	Good mixing and aeration capabilities	
Cage rotor	1 - 3	Oxidation ditch, aerated lagoon	Good mixing and aeration capabilities; not affected by sludge deposits	Ice problem if not properly protected

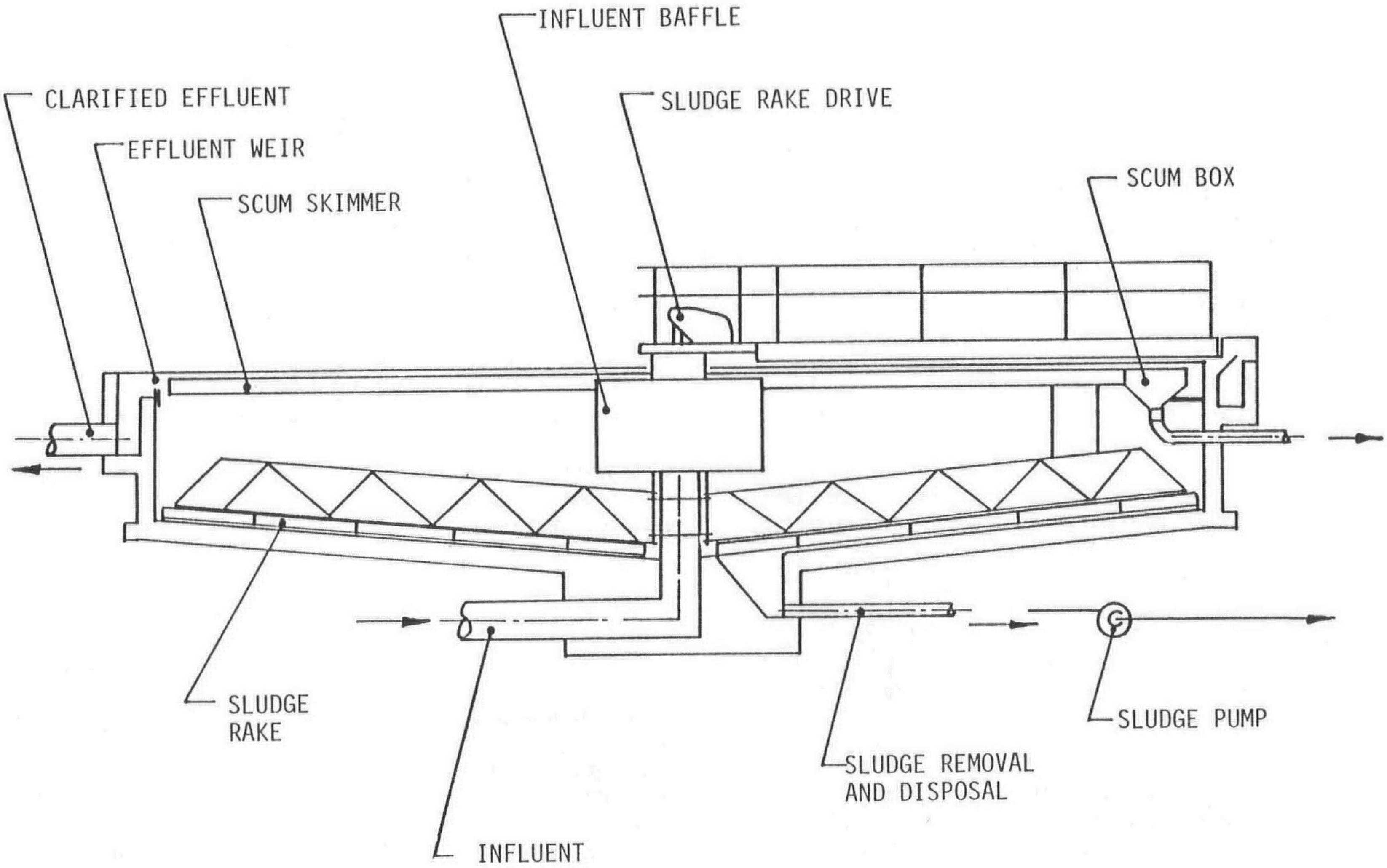

FIGURE 7 TYPICAL CLARIFIER TANK (section)

In primary clarifiers, solids settle as dilute suspensions of flocculating particles. In final clarifiers, the concentration of solids is high enough that the particles settle collectively at nearly the same rate. Thus solids loading rate is an important design parameter.

c) Flow-through velocity: Because of the high solids concentration, the mixed liquor, upon entering the settling tank, tends to flow as a density current interfering with the separation of solids and the thickening of the sludge. To avoid this, the horizontal velocity in the secondary clarifier should be limited to less than 0.8 cm/sec (100 ft/h) in rectangular tanks. For circular tanks, the inlet baffle should have a diameter of 15 to 20 percent of the tank diameter and should not extend more than 1 m (3 ft) below the surface to avoid scouring of deposited sludges.

As with every phase of the biological waste treatment process, good housekeeping is essential in the operation of secondary clarifiers. It is advisable to operate the secondary clarifier with as little sludge on the bottom as possible. The settled sludge is either returned to the biological reactor or removed from the clarifier for further treatment. Prolonged storage of the settled sludge in the secondary clarifier could result in denitrification which will cause the sludge to rise to the surface, producing effluents of poor quality. To overcome this, the sludge-wasting and return equipment should be provided with sufficient capacity so that the settled sludge can be promptly removed. Some equipment manufacturers have designed clarifiers with sludge withdrawal pipes located along the length of the rake to increase the rate of sludge removal.

If scum removal facilities are employed in upstream treatment processes, usually there will be no floating solids in the secondary clarifier. However, where primary settling tanks are omitted, skimming of the secondary clarifier is essential. Scum may be putrescible and odorous. If not promptly removed, it could be carried away with the process effluent, resulting in the deterioration of effluent quality.

Hydraulic shock loads will detrimentally affect the performance of secondary clarifiers. This problem can be alleviated by using flow equalization to maintain a constant rate of flow to the clarifier.

4 BIOLOGICAL TREATMENT PROCESSES

4.1 Introduction

The biological processes which have been developed for the treatment of wastewaters can be generally classified as either suspended growth or fixed film processes. In the former, the microbial population is kept in suspension by aeration, while the latter system utilizes microbial populations attached to a solid surface (captive films) to remove the organic components from the wastewater. Although the previous discussion has emphasized the fundamentals of biological waste treatment as related to suspended growth microbial systems, the basic principles are the same for all aerobic systems.

The following biological treatment alternatives will be discussed in this section:

1) conventional waste stabilization ponds:
    - anaerobic lagoons,
    - aerobic lagoons,
    - facultative lagoons,
    - lagoon systems.
2) aerated lagoons.
3) activated sludge processes:
    - conventional,
    - extended aeration,
    - oxidation ditch,
    - high rate systems,
    - two-stage system,
    - pure oxygen systems.
4) fixed film processes:
    - trickling filters,
    - rotating biological contactors.
5) anaerobic processes.

The order in which these treatment alternatives are discussed is based on the relative complexity of the process and not the effectiveness or relative capability of the process to produce a high quality effluent. Since lagoons demonstrate the fundamentals of biological treatment in the most simplistic manner, they are dealt with first. The discussion then proceeds to more sophisitcated processes such as activated sludge, fixed film, and anaerobic processes.

It should be emphasized that the selection of a treatment process is highly site specific and dependent upon the particular needs and constraints imposed by that situation.

4.2 Waste Stabilization Ponds

1) Process description

Waste stabilization ponds, also called lagoons, oxidation ponds, or waste stabilization basins, are used for the treatment of wastewaters where large areas of land are available. They are artificial storage ponds in which sedimentation and decomposition of organics take place. The process is very popular because low construction and operating costs offer a significant economic advantage over other treatment methods. In addition, their ability to withstand widely fluctuating loads while maintaining relatively stable treatment performance is an important advantage in many industrial applications.

In terms of biological activity, waste stabilization ponds are classified as anaerobic, aerobic, or facultative. A brief process description of each type is presented below.

a) Anaerobic lagoons. The wastes in the anaerobic lagoon are broken down in the absence of dissolved oxygen. This anaerobic breakdown consists of two steps. First, a special group of acid producing bacteria (known as facultative heterotrophs) degrade organic matter into fatty acids, aldehydes, alcohols, etc. Then a group of methane bacteria convert these intermediate products to methane, ammonia, carbon dioxide, and hydrogen. These reactions are shown schematically in Figure 8.

The anaerobic decomposition is slower than the aerobic process and its numerous complex end products often cause offensive odours. Treatment of wastes is brought about by a combination of sedimentation and the anaerobic conversion of organic wastes to end products and new bacterial cells.

The organic loadings used in anaerobic lagoons are so high that they are devoid of free dissolved oxygen throughout their depth except for an extremely shallow surface zone. To conserve heat energy and to maintain anaerobic conditions, these ponds have been constructed with depths up to 6 m (20 ft), although 3 to 4.5 m (10 to 15 ft) is most common, thereby achieving a low surface area/volume ratio.

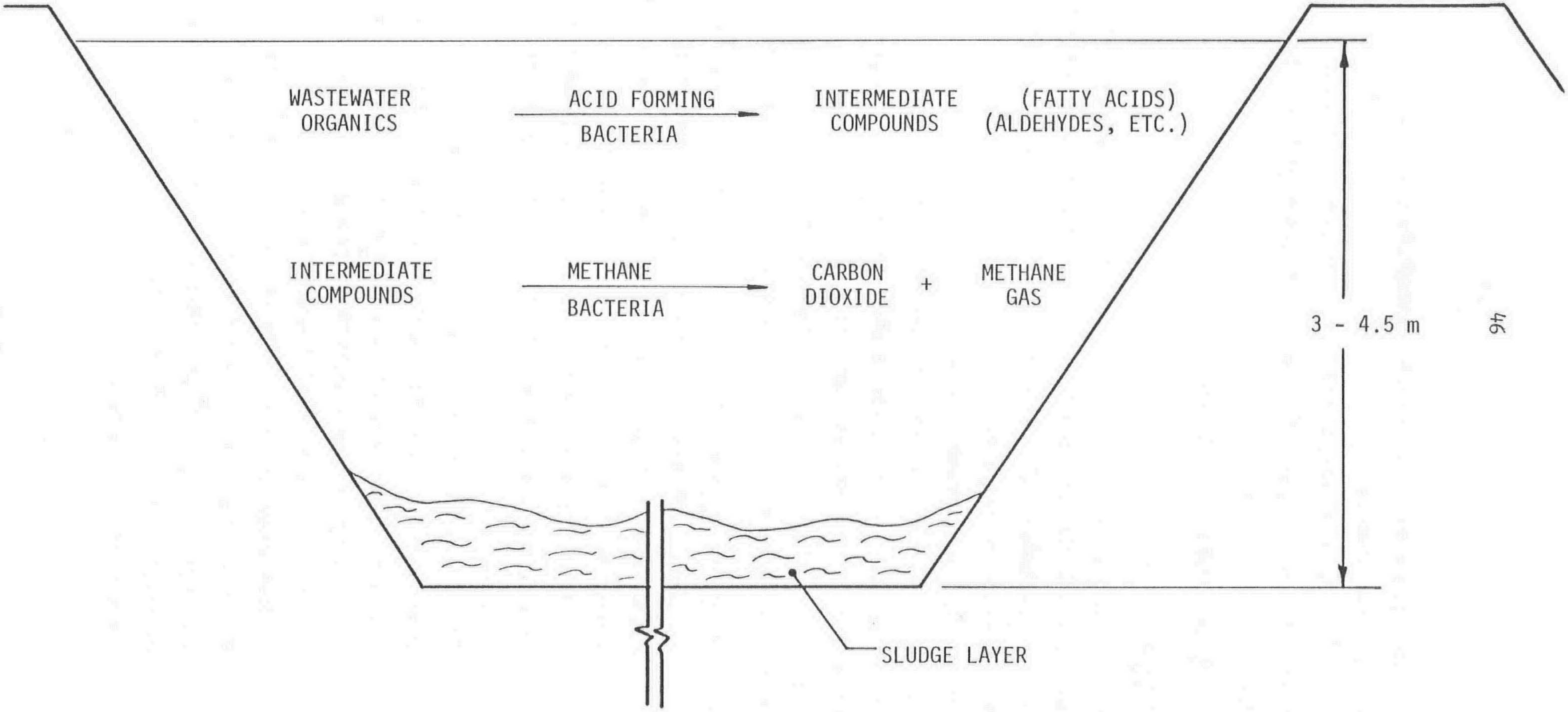

FIGURE 8 SCHEMATIC REPRESENTATION OF AN ANAEROBIC LAGOON

Anaerobic lagoons are most frequently used for pretreatment of high strength organic waste, followed by an aerobic treatment process. Not only do they provide significant reductions in BOD_5 and suspended solids, thereby permitting a reduced sizing of any subsequent treatment unit, but anaerobic lagoons have often been used for the disposal and anaerobic digestion of sludge produced in the aerobic treatment process.

b) Aerobic lagoons. The treatment of organic wastes takes place in the presence of free dissolved oxygen in this type of lagoon. An aerobic lagoon contains bacteria and algae in suspension, and aerobic conditions prevail throughout its depth.

In aerobic stabilization ponds, the bacteria convert the organic matter to more stable products and, in doing so, liberate nutrient elements necessary for algal growth. The algae, utilizing these nutrients, produce oxygen through photosynthesis and thus create and maintain aerobic conditions for the bacteria. The reactions that take place are shown schematically in Figure 9.

Aerobic ponds are usually limited to a depth of less than 1 m (3 ft) to allow the penetration of sunlight to the bottom to stimulate algal growth. However, even ponds of such shallow depth generally have an anaerobic bottom zone of sludge deposits. Maintenance of a truly aerobic regime throughout a stabilization pond requires such shallow liquid depth as to preclude the use of such ponds under most Canadian winter conditions. Thus when the design of an "aerobic" lagoon operating under Canadian conditions is reviewed, it is generally found that the stabilization pond is in fact a facultative lagoon. For this reason, the use of aerobic lagoons for treatment of food processing wastewaters in Canada will not be considered further.

c) Facultative lagoons. Facultative lagoons are those in which the upper layer is aerobic, the bottom sludge zone is anaerobic, and the central zone supports facultative bacteria, (i.e., those that can live and grow either with or without oxygen). From Figure 10 it can be seen that waste stabilization occurs through both aerobic and anaerobic processes. The depth of facultative lagoons ranges between 2 and 3 m (6 and 10 ft).

The facultative pond is oxygenated principally by the photosynthetic activity of algae under the influence of sunlight, although in the larger ponds surface aeration by wind action is also significant.

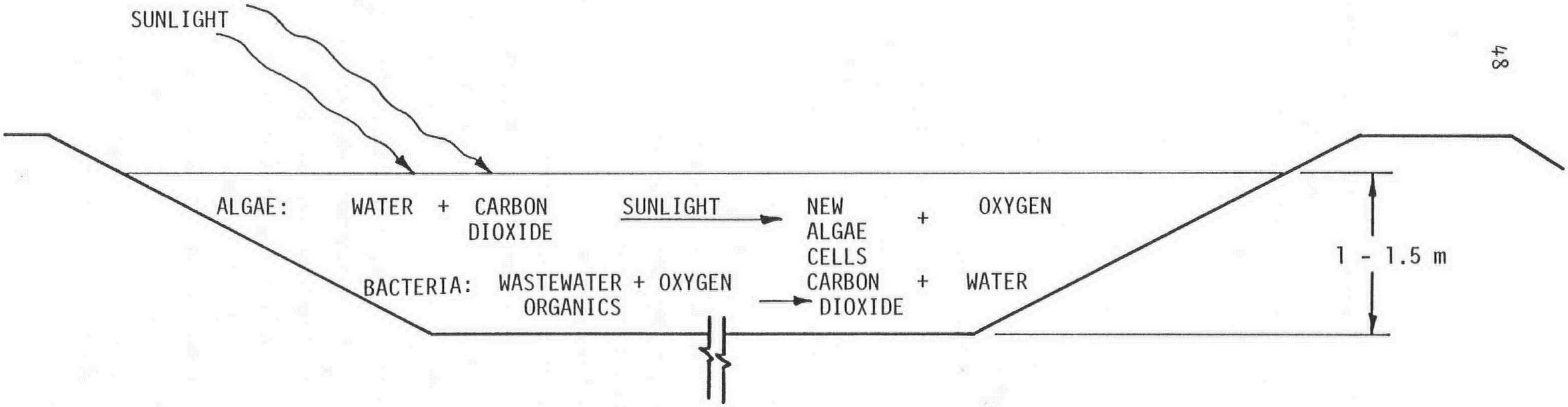

FIGURE 9 SCHEMATIC REPRESENTATION OF AN AEROBIC LAGOON

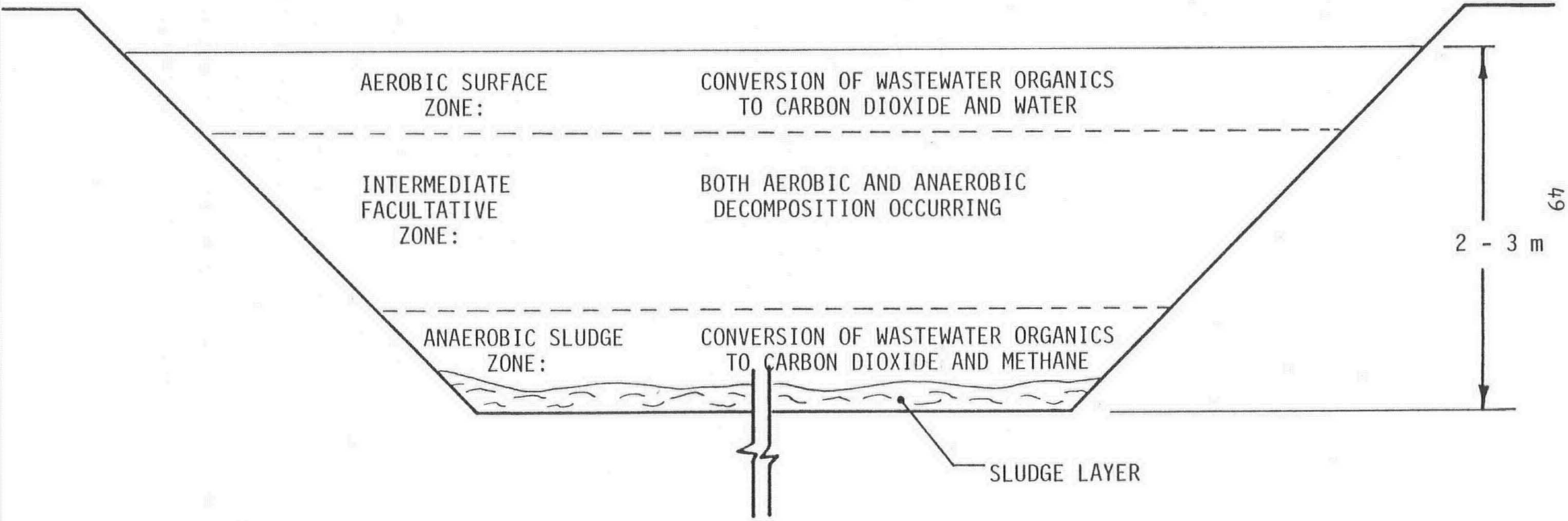

FIGURE 10 SCHEMATIC REPRESENTATION OF A FACULTATIVE LAGOON

Facultative ponds may be used separately for treatment of raw wastewater or in conjunction with other types of lagoons or treatment processes to achieve a higher quality effluent. They have been used as the last stage of a treatment sequence to provide a combination of effluent treatment and effluent storage over the winter period.

d) Lagoon systems. A waste stabilization lagoon system consists of different types of lagoons connected in series and/or parallel. This concept has been used to provide both treatment and winter storage of effluent, particularly in cold climate areas.

Treatment performance with respect to BOD_5 removal in lagoon systems is highly temperature dependent. The reduced rate of biological activity in winter months coupled with reduced detention times due to ice cover can cause significant deterioration in effluent quality. This problem can be alleviated by storing effluent over winter in facultative/storage lagoons when treatment efficiency decreases and the flow in receiving streams is low. When ice cover melts in spring and liquid temperatures rise again, additional treatment of the waste will occur in the facultative/storage pond thereby improving effluent quality prior to discharge.

A typical lagoon system is shown in Figure 11. The anaerobic lagoons provide the first step in the treatment process by significantly reducing the solids and BOD_5 loadings. This permits a more economical design of the succeeding ponds which require a comparatively large land area per pound of BOD_5 applied.

The anaerobic cells should be designed for either parallel or series operation, thereby providing flexibility of operation and the ability to take one cell out of operation for sludge removal without interrupting the treatment process.

The facultative cell should be designed so as to permit an increase in liquid level of the pond in fall, if necessary. The design should allow sufficient depth for ice formation on top with movement of wastewater beneath.

Since the majority of the soluble BOD_5 will have been removed from the waste in the anaerobic and facultative cells, the organic load on the facultative/storage cell will be relatively low. This enables deeper ponds to be constructed (i.e., 3 to 4 m) than would normally be used for facultative lagoons accepting raw wastewater and thus greater economy in land use is achieved. The volume required in the storage cell will be dependent upon local climatic

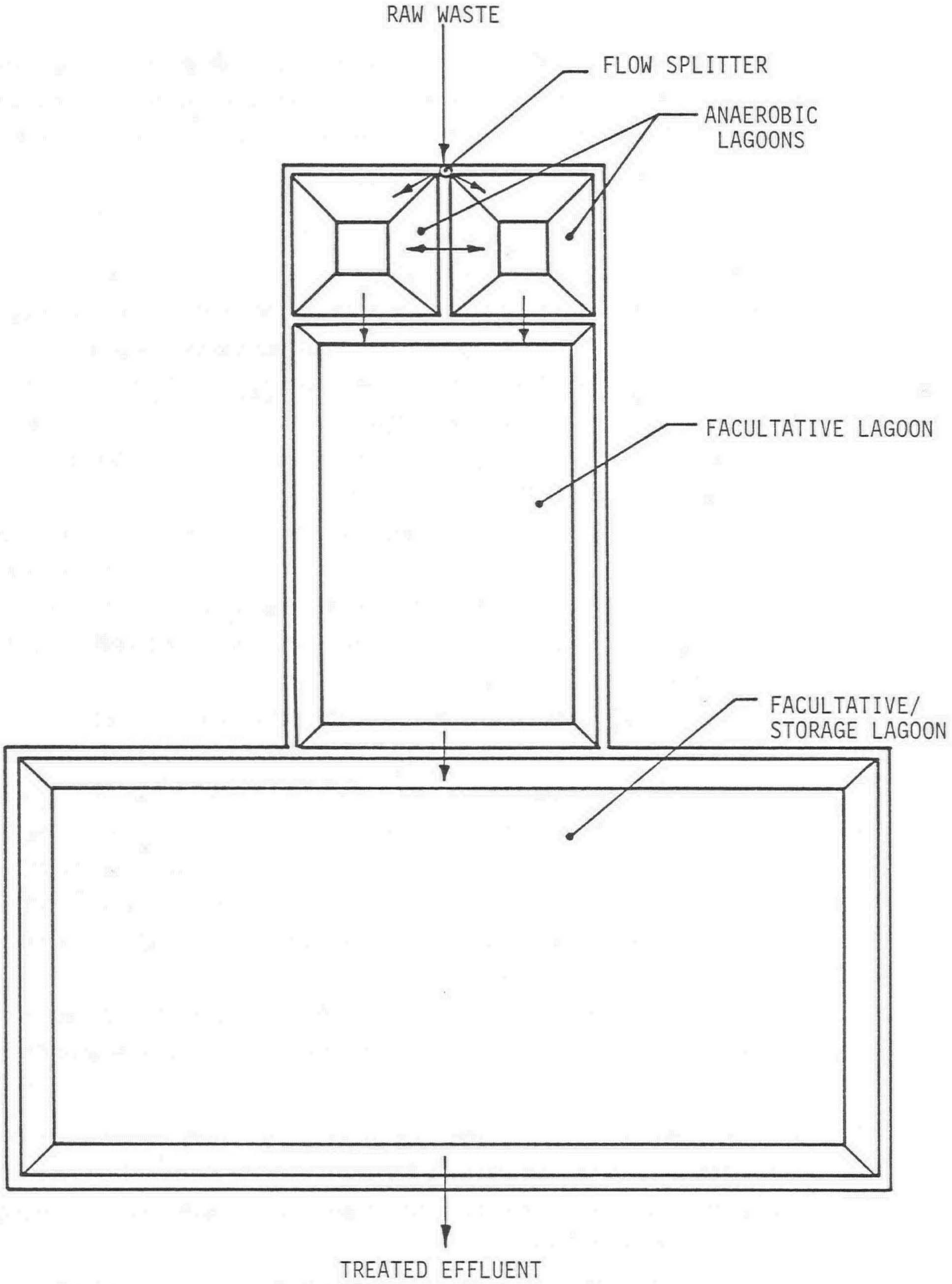

FIGURE 11 LAYOUT OF A TYPICAL LAGOON SYSTEM

conditions, nature of the receiving body, and desired effluent quality. In general, a minimum of four months storage capacity will be required, and as much as twelve months storage may be required by some regulatory agencies.

2) Lagoon design criteria and process performance

Design criteria for lagoons are generally specified in terms of three parameters; depth, detention (holding) time, and organic loading rate. Detention time is the theoretical time it would take a "slug" of wastewater travelling at an average flow rate to pass through the lagoon system. It is calculated by dividing the lagoon volume by the average daily flow rate. Organic loading rate is the rate at which organic food (BOD_5) is applied to the lagoon and is generally measured as kg of BOD_5 applied per day per cubic metre of lagoon volume (lb $BOD_5/1000\ ft^3/d$) or per hectare of lagoon surface area (lb BOD_5/acre/d).

Performance of lagoons, as with other biological treatment systems, is measured by the percentage of influent BOD_5 which the process removes and is referred to as the treatment efficiency. Treatment efficiency is dependent on the design criteria upon which the lagoon was constructed, and the operating conditions under which the process must perform.

A wide range of design criteria and performance data have been reported in the literature for lagoons. The variations in reported values can be largely attributed to variations in treatment requirements and operating conditions. For example, considerably more conservative/stringent design criteria would be required for a lagoon which had to operate through Canadian winter conditions and meet strict effluent quality guidelines for direct discharge, than for a system operating in a warmer climate which had only to provide preliminary or "roughing" treatment prior to discharge to a municipal system.

The following sections summarize much of this data and attempt to provide estimates of process performance to be expected given certain design criteria for a variety of food industry wastewaters.

a) Anaerobic lagoons. Most of the experience in the food processing industry with anaerobic lagoons has been in the meat packing sector. The warm, high organic strength waste generally discharged by this industry is particularly suited to anaerobic treatment.

The process has however been employed by other sectors of the food industry and is used quite extensively in some regions of Canada as a first stage in the treatment of combined municipal/food industry wastewaters. Table 7 summarizes some of the design criteria and process performance data reported in the literature for anaerobic lagoon installations treating packinghouse wastes.

The organic loading design rate used at the majority of installations with anaerobic treatment for packinghouse wastewater has been 0.19 to 0.24 kg $BOD_5/m^3/d$ (12 to 15 lb $BOD_5/1000\ ft^3/d$) as, recommended by most regulatory agencies, although loading rates as high as 0.32 to 0.40 kg $BOD_5/m^3/$ (20 to 25 lb $BOD_5/1000\ ft^3/d$) have been reported. A review of operating data suggests that organic loading may not be as critical a design parameter as detention time or temperature in determining anaerobic lagoon performance. In general, it would appear that anaerobic lagoons can be operated successfully on packinghouse wastewater at any organic loading rate between 0.16 and 0.32 kg $BOD_5/m^3/d$ (10 and 20 lb $BOD_5/1000\ ft^3/d$).

TABLE 7 DESIGN CRITERIA AND PROCESS PERFORMANCE FOR ANAEROBIC LAGOONS

Wastewater Type	Ref.	Plant Location	Lagoon Depth (m)	Detention Time (days)	Organic Loading Rate (kg $BOD_5/m^3/d$)	Process Performance (% BOD Removal)
PACKING HOUSE WASTES						
Beef	(13)	Minnesota	4.6	5.1	0.25	46 - 58%
Hogs	(14)	Iowa	4.6	-	0.17 - 0.23	56 - 72%
-	(15)	Georgia	-	4.6	0.18	65%
Beef	(16)	Iowa	4.6	-	0.24	80%
Hogs	(16)	Iowa	4.3	-	0.24	82%
Beef	(16)	Iowa	4.6	-	0.19	85%
-	(17)	Colorado	-	-	0.19	60 - 88%

There is a shortage of data on the use of anaerobic lagoons to treat other types of food industry wastewaters and there is considerable variation in the data which does exist.

Organic loading rates to anaerobic lagoons treating potato processing wastewater have been reported in the range of 0.08 to 0.72 kg $BOD_5/m^3/d$ (5 to 45 lb $BOD_5/1000\ ft^3/d$), while for a combined dairy/municipal waste, values between 0.048 and 0.93 kg $BOD_5/m^3/d$ (3 and 58 lb $BOD_5/1000\ ft^3/d$) have been reported. Despite this wide range in loading rates, treatment efficiencies reported for many of these facilities are comparable. Due to the apparent lack of correlation between organic loading rate and treatment efficiency, it is considered that anaerobic lagoon design for food industry wastewaters, other than packinghouses, be based simply on detention time, as discussed below.

Detention times in anaerobic cells average approximately five days. Reports have indicated that detention times of less than four days have resulted in the failure of anaerobic cells. This has been attributed to an insufficiently long solids retention time and the resultant loss of active solids. The result is a sharp decrease in treatment efficiency, the appearance of high solids concentrations in the effluent, and the development of odour problems. On the other hand, the use of detention times much in excess of five days results in excessive heat loss in winter months and a subsequent decrease in treatment efficiency. As a result, detention times in the range of four to six days are considered best for anaerobic lagoons.

In general, anaerobic lagoons function better when deep (3 to 4.5 m) rather than shallow. Increasing lagoon depth decreases the surface area to volume ratio, thereby resulting in reduced heat loss in winter.

Anaerobic lagoon performance is highly temperature dependent and for optimal operation a minimum temperature of 24°C should be maintained. When lagoon temperature drops to below 13-15°C anaerobic biological activity and gas production are sharply curtailed. When this occurs, the lagoon does little more than act as a settling basin and is incapable of removing more than the 25 to 40% of influent BOD_5, usually associated with the solids.

The average annual reduction in BOD_5 to be expected from anaerobic lagoons receiving a relatively warm, high-organic strength wastewater is approximately 60%. Treatment efficiencies as high as 80%, or greater, are frequently achieved in summer while in winter months this may drop to below 40%.

A complete cover of scum and accumulated grease is considered essential for good digestion to occur in an anaerobic lagoon. This cover not only provides insulation to the pond, but appears to suppress obnoxious odours. In many cases synthetic covers of polyethylene, styrofoam, and styrofoam and straw have been used to cover anaerobic lagoons.

Effluent from anaerobic lagoons is not considered suitable for direct discharge. As a result, the process is generally used only for pretreatment of wastewaters prior to discharge to municipal sewers to avoid costly sewer by-law surcharges, or as an initial step in a biological treatment system. The ability of the process to remove from 40 to 80% of influent BOD results in a much more economical design for the more costly aerobic secondary phase of wastewater treatment.

b) Facultative lagoons. Facultative lagoons are widely used by most sectors of the food industry. They have been used both as independent treatment systems and frequently to provide additional treatment of effluent from other treatment processes.

It should be noted that whereas organic loadings for anaerobic lagoons are generally specified on a volumetric basis, they are specified in terms of lagoon surface area for facultative ponds and are frequently referred to as the areal BOD loading.

Organic loading rates specified for facultative lagoons by various regulatory agencies in Canada and the USA vary from 14 to 90 kg BOD_5/ha/d (12.5 to 80 lb BOD_5/acre/d), although most recommend rates between 28 and 56 kg BOD_5/ha/d (25 and 50 lb/acre/d). These criteria have generally evolved from a considerable amount of operating experience and have been selected to minimize the likelihood of developing nuisance conditions. While much higher loading rates have, in many cases, been used to achieve satisfactory BOD_5 removals, these systems have frequently been plagued with operating problems such as odour development and sludge accumulation. This has been particularly true of municipal systems accepting heavy loadings from food industry wastewaters.

Detention times used in facultative lagoon design have also been highly variable, depending upon the application. In general, it is recommended that lagoon sizing be based on organic loading unless provincial regulations require the provision of a specific detention period. For instance, in some cases it may be necessary to ensure that no discharge of effluent occurs during winter months. In such instances, detention time will likely be the more stringent requirement. However, in more moderate regions where cold weather storage is not required, lagoons should be sized according to organic loading.

Variation of lagoon depths in the range of 0.5 to 2.5 m (1 to 8 ft) has been found to have little effect upon BOD_5 removal. The minimum depth has generally been chosen so as to minimize sludge odours, weed (emergent) growth and mosquito problems. However, under Canadian conditions, lagoon depth must be selected so as to permit ice formation with movement of water beneath. This is best accomplished by determining depth of freezing in local lakes and ponds and allowing sufficient freeboard to permit the elevation of water levels in the lagoon in winter. The liquid level should be adjusted to maintain the nominal or design depth of free water beneath the ice.

As with anaerobic lagoons, treatment efficiency in facultative ponds is highly temperature dependent. Cold water temperatures and reduced sunlight penetration due to ice and snow cover minimize algae growth and oxygen production in facultative ponds in winter. The shortage of available oxygen coupled with reduced rates of biological activity in winter results in the deterioration of effluent quality. It is for this reason that many regulatory agencies prohibit the discharge of lagoon effluent in winter months. This necessitates either the provision of sufficient capacity within the lagoon to provide winter storage of effluent or the construction of a subsequent storage basin.

Performance to be anticipated from facultative lagoons is summarized in Table 8.

One of the greatest advantages of waste stabilization ponds is that operation and maintenance requirements are minimal. Elimination of emergent vegetation, care of embankments and control of odours and mosquitoes on a routine basis are all that is required. Since part of the settled solids in the ponds will undergo anaerobic decomposition, the net accumulation of sludge is generally

TABLE 8 FACULTATIVE LAGOON - TREATMENT PERFORMANCE

Lagoon System	BOD_5 Removal (across facultative cell only) Winter	 Summer	 Average	Suspended Solids Removal (Average)
Facultative Lagoon Preceded by Anaerobic Lagoon	25 - 40%	70 - 90%	40 - 70%	60 - 80%
Independent Facultative Lagoon Receiving Raw Waste	30 - 50%	70 - 90%	50 - 75%	65 - 90%

very small compared to the capacity of the ponds. For this reason, desludging may be required only at intervals of several years to prevent the ponds from filling up with solids. In cases where the waste contains high concentrations of grit, and grit removal facilities are not provided, more frequent sludge removal will obviously be required. Seasonal adjustment of the liquid level may also be required to prevent the lagoon from freezing completely and to permit operation through winter months.

Operating problems with lagoons occur during winter, when treatment efficiency decreases. Being a temperature dependent process, BOD_5 removal tends to drop off in cold weather, resulting in inferior effluent quality. In order to protect receiving streams from this poor quality effluent it may frequently be necessary to provide complete retention of all winter flows.

The shortage of available oxygen in facultative ponds in winter months (due to the limited growth of algae) leads to the accumulation of products from anaerobic decompostion under ice cover. When the ice melts, these trapped materials, particluarly hydrogen sulphide, are released, causing offensive odour problems in the immediate vicinity and downwind of the lagoon. For this reason, lagoons should only be constructed in rural areas at least one-half mile from residence and downwind if at all possible.

The accumulation of ammonia in the lagoon under ice cover can result in an effluent which is toxic to fish. This can be a particular problem if effluents are stored throughout winter and discharged in spring. This may necessitate delaying discharge until aerobic conditons are restored to the basin and the ammonia concentration of the effluent has been sufficiently reduced to eliminate this toxicity.

Anaerobic ponds can cause severe odour problems, particularly if the wastewater contains high concentrations of sulphates. Anaerobic lagoons treating wastewaters containing 100 mg/L or more of sulphate require special design and operation for odour control (18). Such techniques as design of submerged inlets and outlets, maintenance of a complete scum cover (or installation of a synthetic cover), pH adjustment and chlorination of the raw wastewater have all been found to reduce odour emissions from anaerobic lagoons.

Wastewater stabilization ponds can provide an excellent breeding ground for mosquitoes if not properly designed and maintained. Sufficient liquid depth must be maintained in an oxidation pond to prevent the development of emergent weed growth which harbours mosquito larvae. In addition, the frequent cutting of berm growth and periodic application of pesticides to the berm edges should minimize the problem of insect vectors.

4.3 Aerated Lagoons

1) Process description

The aerated lagoon or aerated stabilization basin is a biological treatment process in which earthen basins having a relatively long detention time and large capacity are oxygenated and mixed by either diffused aeration systems or surface aerators. Because of the large capacity of the basin, the aeration equipment used to provide an adequate oxgyen supply usually does not generate sufficient agitation to keep all the solids in suspension. Solids which settle out in stagnant zones undergo anaerobic decomposition and the system is identified as an aerated facultative lagoon. If agitation is increased to keep all the solids in suspension, the system is referred to as an aerated-aerobic lagoon. Both systems are illustrated schematically in Figure 12.

In aerated lagoons, the biological solids produced generally do not exhibit good settling characteristics. Therefore, in place of conventional secondary clarifiers, aerated lagoons are generally designed with either a quiescent zone in the last one-

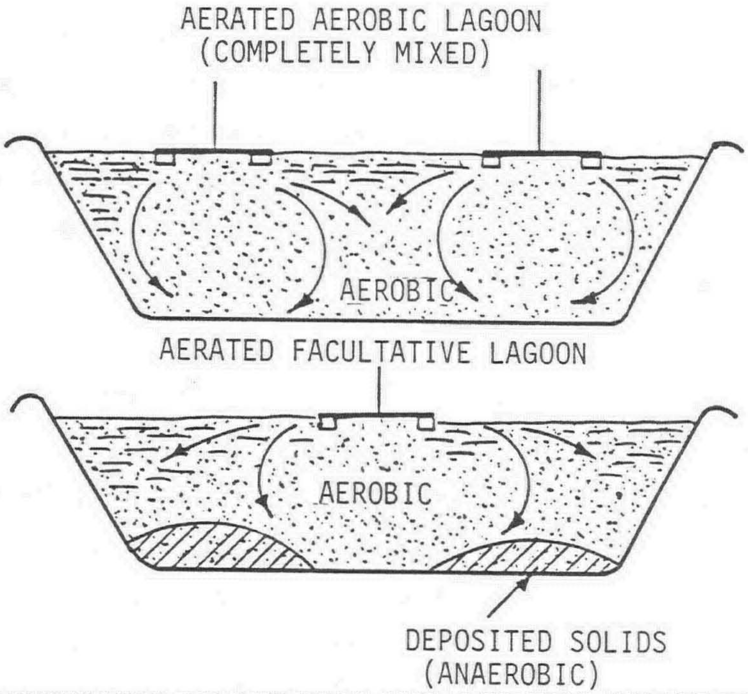

FIGURE 12 SCHEMATIC OF AEROBIC AND AEROBIC-ANAEROBIC BASINS

third of the pond or a separate settling basin with a relatively long detention time to facilitate solids removal.

To improve the quality of effluents from aerated lagoons, a series of cells are frequently provided. It is not uncommon to precede an aerated lagoon with anaerobic ponds to reduce the organic load on the subsequent aerated cells. Alternatively, a short detention, aerated aerobic lagoon may be used as the first stage in the treatment sequence, followed by subsequent aerated facultative cell(s) operated at lower power (mixing) levels. In this type of system, the short detention time used in the first cell results in warmer liquid temperature and thus higher BOD_5 removal rates. The use of an aerated aerobic lagoon enables a higher solids concentration to be carried in this cell which further increases the rate of BOD_5 removal. The aerated facultative basin, operated at the lower turbulence level, will permit some settling of solids to occur. The advantage of using a multi-celled system is that the total basin volume required to achieve a given effluent quality is less than if a single stage is used.

Aerated lagoons have a number of advantages over conventional stabilization lagoons. Since aeration of the lagoon contents results in an appreciable amount of turbidity within the cell, algae growth is minimal and thus the problem of seasonal discharges of high algae concentrations in the effluent is alleviated. Secondly, aeration can continue throughout winter, even under conditions of ice cover, provided the aeration system is properly designed. This improves the level of treatment in winter and in many cases, enables continuous discharge of effluent. Finally, deeper construction and the shorter detention period required for aerated lagoons, results in appreciable savings in land requirements over conventional stabilization lagoons. This land saving can be particularly significant if the need for detention of winter flows is eliminated.

2) Design criteria and process performance for aerated lagoons

The three major design parameters specified for conventional waste stabilization lagoons were depth, detention time and organic loading. While these three must be considered in the design of aerated lagoons, two additional parameters, namely the power (mixing) requirement and oxygen supply must also be specified.

Organic loading rates for aerated lagoons are generally specified on a volumetric basis (i.e., kg $BOD_5/m^3/d$ or lb $BOD_5/1000\ ft^3/d$).

Power requirements are also designated on a volumetric basis as kilowatts per 1000 m^3 or horsepower per million gallons of volume.

Oxygen requirements may be specified as either kg of oxygen supplied per kg of BOD_5 applied or alternatively as kg of oxygen supplied per kg of BOD_5 removed (lb O_2/lb BOD_5). Both forms are commonly used and either may be encountered.

The range of typical design and operating criteria for aerated lagoons is illustrated in Table 9.

a) Organic loading. The use of organic loading rates from 0.06 to 0.3 kg $BOD_5/m^3/d$ (3.5 to 19 lb $BOD_5/1000\ ft^3/d$) has been reported for aerated aerobic lagoons in Ontario (19). The same source recommends the use of an organic loading rate of 0.03 kg $BOD_5/m^3/d$ (2 lb $BOD_5/1000\ ft^3/d$) for design of aerated facultative lagoons.

b) Detention time. Treatment efficiency in aerated lagoons is highly dependent upon detention time. Since aerated aerobic cells are chiefly used as high-rate systems to reduce high influent BOD_5 concentrations, relatively short detention times, usually less than six days, are used. This prevents excessive drops in temperature across the cell and thus maintains a relatively high rate of BOD_5 removal throughout the year.

To achieve the high effluent quality generally required for direct discharge, longer detention times are usually necessary for high strength industrial

TABLE 9 DESIGN CRITERIA FOR AERATED LAGOONS

Organic Loading:	0.03 - 0.3 kg BOD/m^3/d (2 - 20 lb BOD/1000 ft^3/d)
Detention Time:	2 - 40 days
Depth:	2 - 5.5 m (6 - 18 ft)
Oxygen Requirements:	1.0 - 1.5 kg 0_2/kg BOD_5 removed
Sludge Production Rate:	0.1 - 0.3 kg/kg BOD_5 removed
Power Requirements:	0.82 - 26 kW/1000 m^3 (5 - 160 hp/MIG)

wastes. This can be economically achieved through use of aerated facultative cells requiring a lower power input. Detention times of 10 to 40 days are generally used in these cells, depending upon required effluent quality and degree of pretreatment.

c) Temperature. An aerated lagoon, compared to an activated sludge process, is less susceptible to shock loads. However, it is more sensitive to temperature changes due to the low solids concentration in the aeration basin. In addition, the long residence time, large surface areas, and use of surface aerators result in significant heat loss when the liquid temperature differs from the ambient temperature. Therefore, the design volume of aerated lagoons should be based on temperatures encountered in the winter months rather than on summer operating temperatures.

d) Depth. Selection of depth for aerated lagoons is a trade-off between heat conservation and maintenance of a mixed flow regime. By increasing the depth of a lagoon and thereby decreasing the surface area to volume ratio, heat loss is reduced and the rate of biological activity is increased. In addition, greater depths generally improve oxygen transfer efficiency by increasing the duration of contact between the waste and air bubbles. However, as depth is increased it becomes more difficult to ensure sufficient mixing to maintain complete oxygen dispersion and to ensure uniform dissolved oxygen levels throughout the lagoon, particularly with surface aeration equipment. For basin depths of greater than 3.7 m, draft tube aeration must be used to provide adequate mixing if surface aerators are employed. Most aerated lagoons are operated at depths of 2 to 5.5 m, with a 4.5 m depth being most common.

e) Oxygen supply. Experience has indicated that aeration equipment should be capable of transferring approximately 2 kg of oxygen per kg of BOD_5 applied to the lagoon, in order to satisfy all oxygen demands and maintain an average working dissolved oxygen level of approximately 3 mg/L. Sufficient oxygen must be supplied to satisfy the demands for conversion of influent BOD_5, endogenous respiration of the microorganisms, nitrification of ammonia, and the conversion of soluble BOD_5 released during anaerobic degradation of the settled sludge (benthal demand).

Oxygen requirements should generally be designed for summer operation since the rates of BOD_5 conversion, nitrification, and sludge digestion are highest during warm weather.

The actual air supply requirements will be determined by both the oxygen-transfer efficiency of the aeration system and the mixing requirement. It is commonly recommended that 75 to 110 m^3 of air be supplied per kg of BOD_5 removed (1200 to 1800 ft^3/lb of BOD removed)(20).

f) Mixing requirement. For the aerobic lagoon, sufficient power must be supplied to maintain all solids in suspension. A minimum power input of 2.8 kW/1000 m^3 (17 hp/MIG) of basin volume has been recommended to maintain a completely mixed flow regime (21). The actual power requirement to maintain all solids in suspension, however, will vary with the nature of the solids, the physical aspects of the lagoon design and geometry, and the mixing efficiency of the aeration equipment.

Others have found that considerably higher power levels are required to maintain all solids in suspension than those previously quoted. One source recommends power inputs of between 13 and 26 kW/1000 m^3 of basin volume (80 to 160 hp/MIG) (20), while a manufacturer of surface aerators states that 12 to 20 kW/1000 m^3 (72 to 120 hp/MIG) is required to maintain all solids in suspension.

Power requirements for aerated faculative lagoons are considerably less, since sufficient turbulence need only be provided to maintain complete oxygen dispersion and uniform dissolved oxygen levels throughout the lagoon. While one source has found that a minimum power level of 0.82 kW/1000 m^3 (5 hp/MIG) of basin volume is required to ensure sufficient mixing (21), another suggests 2.6 to 5.2 kW/1000 m^3 (16 to 32 hp/MIG) is required to distribute oxygen throughout the liquid layer (20). One manufacturer of surface aerators claims that 1.1 to 2.0 kW/1000 m^3 (7 to 12 hp/MIG) will accomplish the required mixing, while another manufacturer of diffused aeration equipment recommends only 0.49 to 1.15 kW/1000 m^3 (3 to 7 hp/MIG).

These differences in recommended power inputs are largely attributable to different mixing efficencies of various types of aeration equipment.

Power inputs required to meet both the oxygen transfer and mixing requirements should be calculated when sizing aeration equipment for aerated lagoons. The larger power requirement should be used in selecting the necessary equipment. It is generally found that the mixing requirement will be greater and will dictate the choice of aerator size.

g) Process performance. As discussed in section 2, treatment efficiency in aerated lagoons is highly dependent upon both detention time and temperature. When sufficient detention time is provided and multi-cell operation is used, BOD_5 removals in excess of 90% can be achieved on a year-round basis.

3) Aerated lagoon operating requirements

While the operation of aerated lagoons involves somewhat more maintenance than conventional stabilization basins, this is considered minimal in comparison to other more sophisticated biological treatment alternatives. Most maintenance is of a mechanical nature and is associated with the aeration equipment. This consists of lubrication, periodic cleaning of air distribution equipment and general maintenance of motors and air compression equipment.

Sludge removal from quiescent zones in aerated facultative lagoons is also necessary to prevent short-circuiting and decreasing treatment efficiency due to sludge accumulation which results in reduced detention time.

Berm maintenance and control of weed growth should also be practiced regularly.

4) Potential operating problems of aerated lagoons

One of the most common problems encountered with aerated lagoons is that of aeration equipment failure during cold winter months. This problem has been largely associated with surface aerators, particularly the floating models. Ice accumulation on the impeller and shrouds of surface aerators has in many cases resulted in the bending of blades, severe vibrations causing misalignment, and in some cases, the overturning of floating aerators. A number of investigators have expressed the opinion that the use of surface aerators is not practical under severe winter conditions, such as those experienced in Canada.

Scale build-up and subsequent clogging in the tubing and orifices of some diffused air equipment has also been a problem, although this has been largely overcome by periodic treatment with hydrochloric acid gas.

Sludge accumulation in quiescent areas of facultative aerated lagoons can result in short circuiting and decreased treatment efficiency if this condition is not monitored and the sludge removed when necessary.

Some odour problems from aerated lagoons have been reported for short periods in early spring. This is probably due to an inadequate supply of oxygen resulting in the production of odourous end products from the anaerobic decomposition of sludge deposits. If the benthal oxygen demand is considered when calculating the required oxygen supply, adequate oxygen should be present to oxidize these compounds aerobically in the liquid phase and eliminate the odour problem.

4.4 Activated Sludge Processes

The most common suspended growth process used in the treatment of wastewaters from the food processing industry is the activated sludge system. The conventional activated sludge process is illustrated in Figure 13. The process consists of an aeration tank, secondary clarifier and sludge recycling equipment. A primary clarifier is usually employed prior to the aeration basin to remove floating matter and setteable solids from the raw sewage. Although there have been several modifications to this basic process, the principles involved in the design and operation of all activated sludge systems are the same. The following section discusses some of the main principles pertinent to the design of activated sludge systems.

1) Process description

The activated sludge process utilizes an active mass of flocculent microorganisms to aerobically convert organic matter to cellular material which can be efficiently separated from its suspending liquid by physical processes. Wastewater and microorganisms are aerated in a tank using either diffused or mechanical aeration. The aeration tank contents, usually referred to as mixed liquor, flow into a clarifier

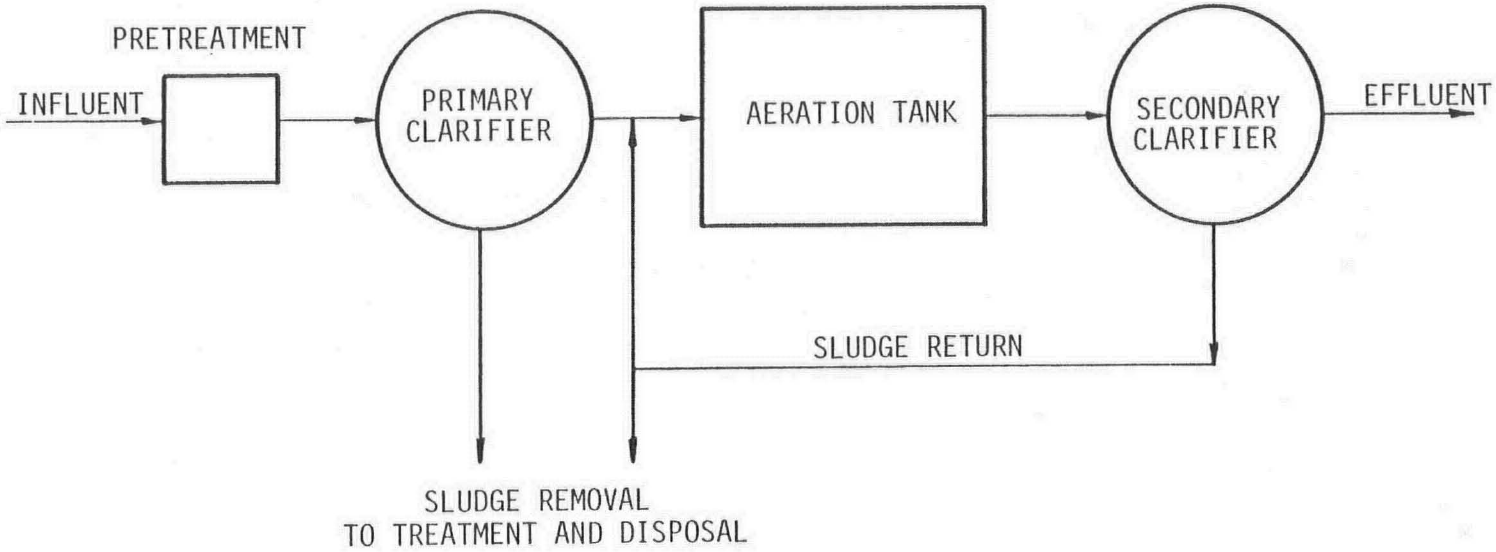

FIGURE 13 FLOW DIAGRAM OF THE CONVENTIONAL ACTIVATED SLUDGE PROCESS

where the biological mass is separated from the liquid. A portion of the biological solids is recycled to the aeration tank while the remainder is removed or wasted at a rate proportional to the growth of new cellular material.

2) The microbial population

Activated sludge is composed of bacteria, fungi, protozoa, rotifers and other higher forms of microbial life. The bacteria are the most important group of microorganisms as they are responsible for stabilization of the soluble organic matter and formation of the biological floc. The agglomeration of bacterial cells results in the development of large floc particles which can be readily removed by gravity sedimentation.

The protozoa are single-celled microorganisms requiring an aerobic environment. They feed on dispersed bacteria that have not flocculated and generally, are not capable of utilizing soluble organic matter. When conditions for growth become unfavourable, the protozoa enter a dormant state until environmental conditions become more favourable.

Rotifers are multi-celled organisms which feed on small biological particles that have not been entrapped in the sludge floc during sedimentation. The presence of protozoa and rotifers is essential since the removal of dispersed bacteria and non-settleable floc particles is required for production of a high quality effluent. The presence of rotifers is considered to be an indicator of an extremely stable activated sludge system.

It is usually not desirable to have fungi present in an activated sludge system as they tend to form filamentous growths which prevent good floc formation and hence create poor settling characteristics. High carbohydrate waste, low pH and nutritional deficiencies all stimulate fungal growth. It should be noted that certain bacterial species also exist as filamentous growths.

The various types of microbial life found in a typical activated sludge system are illustrated in Figures 14 and 15.

3) Process loadings

The activated sludge process must be operated at organic loadings such that the microbial population exhibits flocculent characteristics which will result in efficient solid-liquid separation. A common parameter used to measure the organic loading in the activated sludge process, is the food to microorganism ratio (F/M). The F/M ratio, also referred to as the organic loading or process loading factor, is a measure

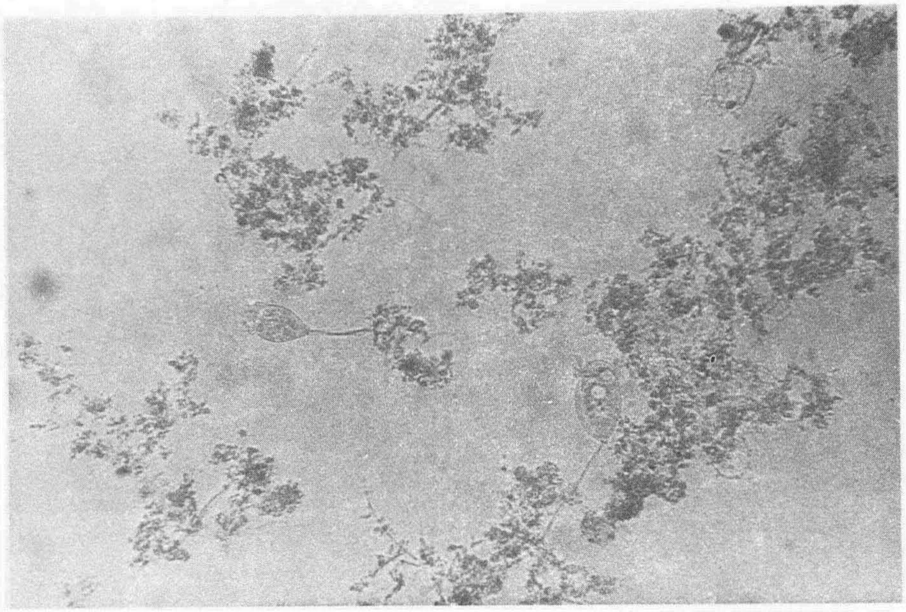

PHOTOMICROGRAPH (x125) OF BACTERIAL FLOC
PARTICLES AND MICROBIAL POPULATION OF HEALTHY
ACTIVATED SLUDGE

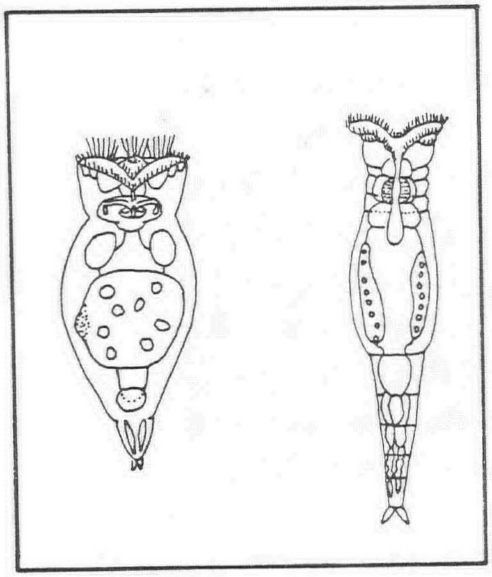

ROTIFERS

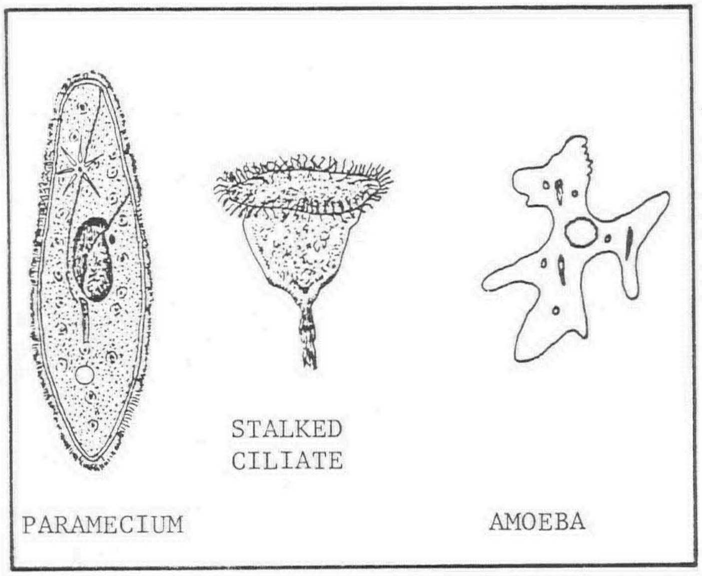

PROTOZOA

FIGURE 14 MICROBIAL POPULATION OF HEALTHY ACTIVATED SLUDGE

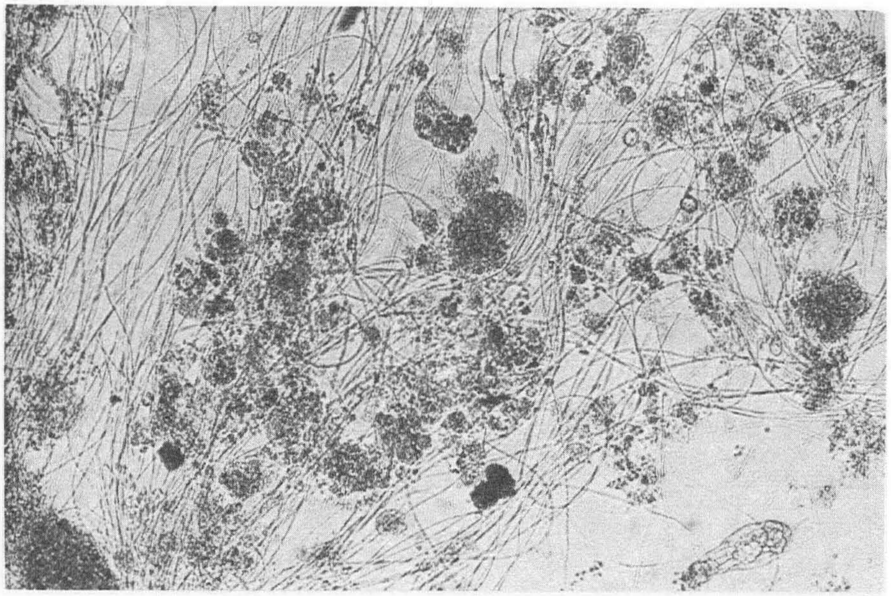

PHOTOMICROGRAPH (x125) OF UNDESIRABLE
FILAMENTOUS GROWTH TYPICALLY FOUND IN HIGH CARBOHYDRATE
OR NUTRIENT DEFICIENT WASTES

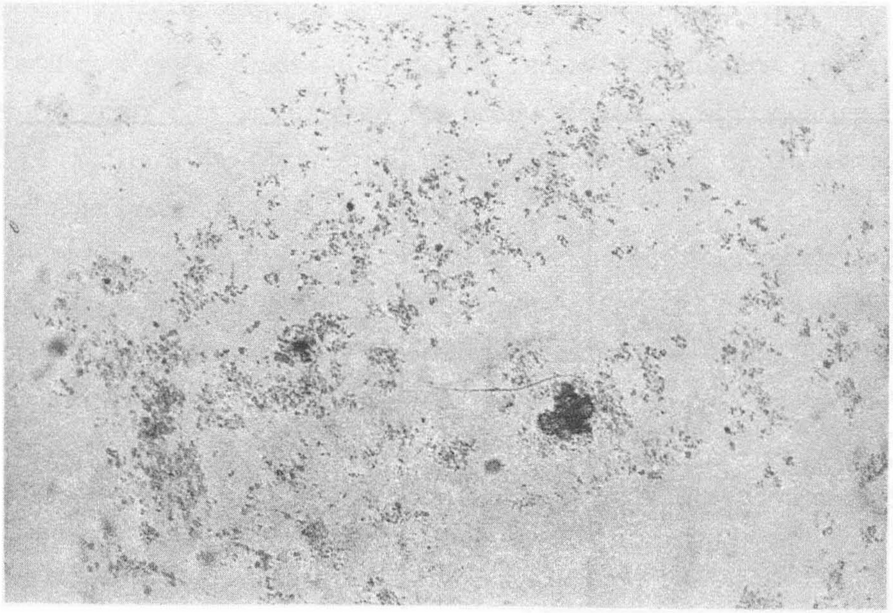

PHOTOMICROGRAPH (x125) OF DISPERSED BACTERIAL
GROWTH OR PIN-POINT FLOC WITH POOR SETTLING CHARACTERISTICS

FIGURE 15 MICROBIAL POPULATION OF UNHEALTHY OR PROBLEM ACTIVATED SLUDGE of the rate at which BOD is fed to a unit mass of organisms. It is defined by the following expression:

$$F/M = \frac{\text{amount of food applied}}{\text{no. of microorganisms in tank}} = \frac{S_oQ}{X_aV} = \frac{S_o}{X_at}\ ; \quad \text{since } t = \frac{V}{Q} \qquad (4.1)$$

where:

S_o = BOD_5 concentration of the wastewater (mg/L).

X_a = average concentration of microorganisms in the aeration tank (mg/L). Microbial concentration is usually measured by the concentration of the volatile suspended solids in the mixed liquor (MLVSS).

t = liquid detention time in the aeration tank (days).

Q = wastewater flow rate (L/day).

V = aeration tank volume (L).

The effects of organic loading on sludge settleability and microbial population are shown in Figure 16. Sludge settleability is measured by the sludge volume index (SVI) which is defined as the volume occupied by one gram of mixed liquor suspended solids (MLSS) after settling for 30 minutes. The test is carried out by allowing a one-litre sample of mixed liquor to settle for 30 minutes in a one-litre graduated cylinder. The SVI in ml/g is the millilitres of sludge following settling divided by the grams of MLSS in the sample.

Minimum SVI values which indicate optimum solid-liquid separation occur when the activated sludge system has a well balanced microbial population which produces large flocculated particles. As a general rule, an SVI of 100 for a diffused air plant and 250 for a mechanically aerated plant is indicative of good sludge quality. For most industrial wastes this generally corresponds to an organic loading varying from 0.2 to 0.5 kg BOD_5/kg MLVSS/d (lb BOD_5/lb MLVSS/d) and is identified as the design range for conventional activated sludge systems. The organic loading rate is defined as the ratio of substrate concentration (BOD_5) to microbial mass measured as mixed liquor volatile suspended solids. When the organic loading becomes so low that there is insufficient biodegradable substrate to sustain continued growth, endogenous metabolism or auto-oxidation occurs. In this process the microorganisms die,

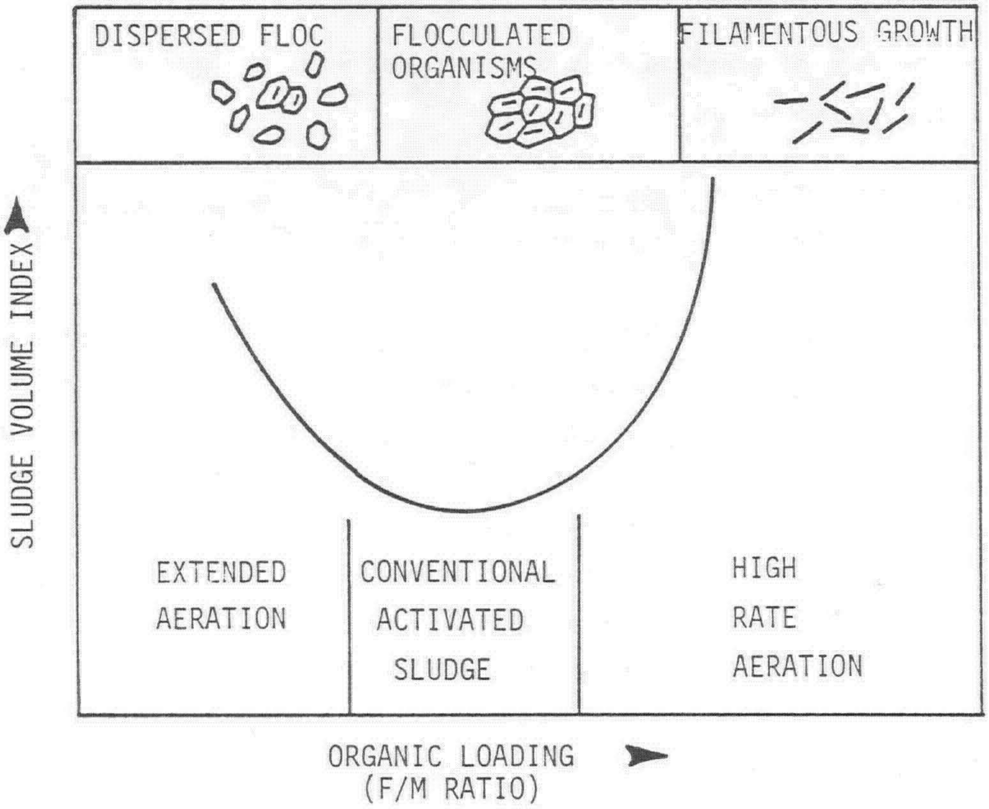

FIGURE 16 SLUDGE SETTLEABILITY AS A FUNCTION OF ORGANIC LOADING

releasing the nutrients of their protoplasm for utilization by living cells. The non-biodegradable cell capsules and viable cells form a dispersed or "pin-point" floc which does not settle properly resulting in a high SVI.

Conversely, at high F/M ratios, the bacteria reproduce at maximum growth rates. Under these conditions the microbes will not form a readily settleable floc. Filamentous microorganisms may also develop at higher organic loadings especially in the presence of readily available carbon source or low dissolved oxygen concentrations. When the filamentous microorganisms are present the sludge will not settle and the resulting condition is identified as sludge bulking.

4) Sludge age

The sludge age, also identified as solids retention time or cell residence time, is a measure of the average retention time of solids in the activated sludge system. For a system employing recycle of a portion of the sludge, and removal of the remainder, the sludge age is defined as:

$$G = X_v / \Delta X_v \tag{4.2}$$

The sludge age, G, in days, is the kilograms of mixed liquor volatile suspended solids in the aeration tank (Xv) divided by the kilograms of mixed liquor volatile suspended solids wasted per day (ΔXv).

For those systems not employing sludge return and wastage, the sludge age is equal to the liquid detention time for the aeration basin.

The sludge age in an activated sludge system must be greater than the maximum generation time of the microorganisms in the system. Otherwise, the bacteria are washed from the system faster than they can reproduce and process failure occurs. For microbial population having long generation times, the operation of the activated sludge process must be related to the sludge age rather than the F/M ratio. This condition exists for nitrifying bacteria, and thus operation and performance of a biological nitrification system are related to the sludge age.

A sludge age of three to four days is considered optimum for most conventional activated sludge operations.

5) Temperature effects

Activated sludge processes are generally less sensitive to low temperatures than other biological treatment processes. One theory which explains this phenomenon is related to the availability of oxygen to the floc particles. The outer layer of a floc particle is aerobic while the inner core is usually anaerobic. In the anaerobic zone, stabilization of organics occurs at a rate which is only a fraction of that which will occur under aerobic conditions. At high liquid temperatures, the substrate removal rate and corresponding oxygen utilization rate are high, thus limiting the depth of penetration of oxygen into the particle. At low liquid temperatures, the substrate removal rate and corresponding oxygen utilization rate are lower, the depth of penetration of oxygen is greater and consequently a larger portion of the floc particle is aerobic. Since the substrate removal rate is much higher under aerobic conditions than under anaerobic conditions, the treatment efficiency is maintained at the lower temperatures.

6) Growth of filamentous microorganisms

As mentioned earlier, filamentous bacteria and fungi create undesirable mixed liquor characteristics. The majority of filamentous microorganisms are obligate aerobes having a high suface area to volume ratio. Since they are present in the mixed liquor as individual filaments, their large surface area to volume ratio provides optimum conditions for the transfer of oxygen and substrate at low mixed liquor dissolved oxygen concentrations.

At low mixed liquor oxygen concentrations these organisms are able to compete quite favourably with the non-filamentous growths or floc particles, which are limited by the penetration of oxygen into the particle. The same argument holds true for low nutrient (nitrogen and phosphorus) concentrations in the mixed liquor.

One of the major problems created by filamentous microorganisms is the creation of sludge-bulking conditions. It is a condition in which mixed liquor containing filamentous microorganisms will not settle becasue of the network of filaments embedded in the sludge mass. The cause of the bulking condition can generally be related to pH, nutrient supply, the presence of sulphur compounds, carbon source or oxygen limitations. A more detailed discussion of the sludge-bulking problem and its cures will be found in Section 4.4.1.

7) Biological nitrification-denitrification

Activated sludge systems can be designed to satisfy the oxygen demand of both carbonaceous and nitrogeneous material. At the organic loading rates used in conventional activated sludge systems, microorganisms stabilize the carbonaceous organic compounds and convert organic nitrogen to ammonia. Under suitable conditions the ammonia can be oxidized to nitrite and then to nitrate by another group of microorganisms known as nitrifying bacteria. The transformation steps are summarized in equation 4.3.

$$\text{Organic N} \rightarrow \underset{(NH_3, NH_4^+)}{\text{ammonia N}} \rightarrow \underset{(NO_2^-)}{\text{nitrite N}} \rightarrow \underset{(NO_3^-)}{\text{nitrate N}} \qquad (4.3)$$

This process, identifed as biological nitrification, may be incorporated as part of the carbon removal process in a single stage or separate activated sludge basins for carbon removal and for nitrification may be utilized. In either case, the system with the nitrifying bacteria must be operated at a high sludge age (i.e., 10 to 20 days), as the nitrifiers have a long generation time and their growth rate is extremely temperature sensitive. In addition, a dissolved oxygen residual of at least 1.5 to 2.0 mg/L must be maintained in the mixed liquor.

Nitrate nitrogen remains in solution as an ion. Under anaerobic conditions it can be reduced to molecular nitrogen and removed from solution. In this biological denitrification step, bacteria using organic carbon as an energy source, convert the nitrate to molecular nitrogen gases which are subsequently released to the atmosphere. In the treatment of most wastewaters, organic carbon may have to be added for the denitrification process since its concentration and availability have been greatly reduced in the previous treatment stages. Methanol is frequently used as a carbon source for denitrification.

The basic principles, process alternatives and design considerations for biological nitrification-denitrification systems are presented in References (22) and (23).

4.4.1 Conventional Activated Sludge Process

1) Process description

A schematic of the conventional activated sludge process and a brief description of its operation were presented at the beginning of Section 4.4.

The aeration tank may be designed and operated as either a completely mixed system (also known as a continuous flow stirred-tank reactor) or a plug flow system. In an ideal plug flow system, the wastewater and return sludge are added at one end of a long rectangular tank. This mixture progresses along the length of the tank and BOD conversion is proportional to the distance the mixture has travelled. Theoretically, mixing only occurs laterally (i.e., perpendicular to direction of the flow) in a plug flow reactor.

In a completely mixed system, material entering the reactor is immediately dispersed throughout the tank. The concentration of any substance in the tank effluent is the same as its concentration within the tank contents.

An advantage of the completely mixed system for food processing wastewater treatment is its buffering capacity. The reactor acts as an equalization basin, thus minimizing adverse effects of intermittent slug loadings of acids, bases or toxic materials. The plug flow reactor allows for a closer control of aeration, thus minimizing energy requirements. Since oxygen requirements will be greater at the entrance end of the reactor than at the exit, aeration can be staged in order to maximize the aeration efficiency. In practice, every aeration basin operates in a flow regime somewhere between a completely mixed and a plug flow reactor.

2) Design criteria for conventional activated sludge systems

Table 10 summarizes typical design criteria for conventional activated sludge systems. The organic loading rate or F/M ratio was discussed under the heading Process Loadings in Section 4.4. Loadings may also be expressed on a volumetric basis (rate of organic loading per unit volume of aeration basin). The MLSS concentration is a direct indicator of the concentration of the microbial population in the reactor. An MLSS concentration of 2000 to 4000 mg/L is required to maintain maximum treatment efficiency at the organic and volumetric loading rates specified in Table 10.

3) Process performance of conventional activated sludge process

In a well designed and properly operated conventional activated sludge plant, greater than 90% BOD_5 and suspended solids reductions can generally be achieved. Although treatment efficiency is dependent on the influent waste characteristics, effluent BOD_5 and suspended solids concentration of less than 30 and 60 mg/L, respectively, are usually attainable.

4) Operating requirements of conventional activated sludge process

The following is a description of key operational procedures for the conventional activated sludge process:

a) The dissolved oxygen level should be checked at various points in the aeration tank at least twice a day; one of these checks should be made during the period of peak loading. A minimum dissolved oxygen level of 1.5 to 2 mg/L should be maintained throughout the aeration tank. Although excess dissolved oxygen will not adversely affect the performance of the system it will increase operating costs. Adjustment of aeration devices should be made when necessary to ensure optimum aeration.

TABLE 10 DESIGN CRITERIA FOR CONVENTIONAL ACTIVATED SLUDGE PROCESS

Organic Loading Rate:	0.2 - 0.5 kg BOD_5/kg MLSS/d
Volumetric Loading Rate:	0.4 - 1.8 kg BOD_5/m^3/d (25 - 110 lb BOD_5/1000 ft^3/d)
MLSS Concentration:	2000 - 4000 mg/L
Sludge Return Ratio:	25 to 50% of the process influent flow rate
Mixed Liquor Depth:	3 - 5 m (10-15 ft)
Oxygen Requirements:	1.2 - 1.5 kg O_2/kg BOD_5 applied
Sludge Production Rate:	0.5 - 0.7 kg/kg BOD_5 removed

b) Sufficient solids concentration should be maintained in the aeration tank (Table 10). It is essential to check and adjust the concentration of MLSS to the desired level at least once a day. The MLSS concentration is most easily controlled by regulating the sludge removal rate from the aeration tank or by adjusting the sludge return rate. Sludge removal is achieved by a continuous or batch wasting of sludge from either the sludge return line or the aeration tank. By increasing or decreasing the sludge return rate the concentration of MLSS in the aeration tank can be increased or decreased. Sludge should be removed from the secondary clarifier as fast as it forms since excessive detention of sludge in the clarifier may result in deterioration of effluent quality caused by floating sludge.

c) The 30-minute sludge settling test discussed in Section 4.4 under the heading Process Loadings should be carried out daily. Any variation in settled sludge volume will reflect the change in quantity and quality of MLSS in the aeration tank; for example, an increase in the settled volume would indicate that either the sludge concentration is increasing and some sludge wasting is required or the sludge quality is deteriorating. A good settling sludge usually has an SVI of less than 100 ml/g. The SVI may be controlled by varying the sludge removal or sludge return rates as described above and the aeration rate. Increase in the SVI may also be caused by bulking or rising sludge. Corrective measures are discussed below.

d) Periodic inspection and replacement of worn mechanical parts and regular cleaning and lubrication of aeration devices, compressors, pumps etc., is essential to maintain a stable, reliable and highly efficient treatment plant operation.

5) Potential operational problems associated with the conventional activated sludge process

a) Bulking sludge. One of the most serious problems encountered in the operation of activated sludge systems is sludge bulking. As mentioned previously, a bulked sludge is one that has poor settling characteristics and poor compactibility. Two principal causes of bulking have been identified. The first cause is the proliferation of filamentous organisms. The second cause is bound water, in which bacterial cells, swell through the addition of water to the extent that their density is sufficiently reduced that they will not settle. The following are most often cited as reasons for sludge bulking:

- physical and chemical wastewater characteristics including fluctuations in flow and strength, pH, temperature, staleness, nutrient content and composition of the waste;
- treatment plant design limitations such as air-supply capacity, clarifier design, return-sludge pumping-capacity limitations and short-circuiting or poor mixing;
- operational causes including low dissolved oxygen concentration, organic overloading and clarifier operation.

Limited dissolved oxygen is the major cause of bulking. Sufficient aeration should be provided to maintain at least 1.5 to 2.0 mg/L of dissolved oxygen in the aeration tank.

Sludge bulking may also be alleviated by the following methods:

- The F/M ratio should be checked to ensure it is within the range of generally accepted values (0.2 to 0.5 kg BOD_5/kg MLSS/d). If it is outside this range, the sludge removal rate or sludge return rate should be adjusted accordingly.
- The composition of the wastewater may lead to sludge bulking. Concentrations of nitrogen and phosphorus should be checked and readjusted if necessary (see Section 3.3.3). Limitations of both or either are known to favour bulking. Wide flucuations in pH and organic loadings, characteristic of batch-type operations, may also lead to bulking.
- Chlorination of raw wastewater or return sludge may be used to provide temporary alleviation of sludge bulking. Although chlorination is effective in controlling bulking caused by filamentous growths, chlorination is ineffective when bulking is caused by light floc containing bound water. Chlorination of return sludge should be based upon its dry solids content. A reasonable range is between 0.2 and 1.0 percent by weight. Chlorination normally results in the production of turbid effluent until such time as the sludge is freed of the filamentous forms. Chlorination of a nitrifying sludge will also produce a turbid effluent, due to death of the nitrifying organisms.

- The addition of hydrogen peroxide to activated sludge systems at concentrations of 10 to 20 ppm has also demonstrated an ability to control filamentous growth and alleviate problems of sludge bulking.

b) Rising sludge. Sludge that has good settling characteristics will occasionally rise or float to the surface following a short settling period. This is caused by the denitrification process discussed in Section 4.4 under the heading Biological nitrification-denitrification. As nitrogen gas is formed in the sludge layer, some of it becomes trapped. If sufficient gas is produced the sludge mass becomes buoyant and rises or floats to the surface. Rising sludge can be differentiated from bulking sludge by noting the presence or absence of small gas bubbles attached to the floating solids. The following practices may serve to alleviate the rising sludge problems:

- increasing the sludge removal (wasting) rates;
- decreasing the flow of mixed liquor to the problem clarifier;
- increasing the speed of sludge-collection mechanisms in the settling tanks wherever possible.

c) Foaming. Large quantities of foam may be produced during start-up of the process, when the MLSS concentration is too low or whenever high concentrations of surfactants such as soaps or detergents are present in the raw wastewater. Foam usually contains sludge solids, grease and large numbers of bacteria. The wind may lift the froth off the tank surface and create nuisance conditions. Methods for control include:

- spraying water on the surface of the aeration tank;
- increasing the solids concentration in the aeration tank; and
- the addition of an anti-foaming agent.

d) Clogging of air diffusers. This is also a problem frequently encountered in the activated sludge system. Regular inspection and cleaning are essential. The diffusers should be designed so that they can be removed for inspection and cleaning without emptying the contents of the aeration tank.

4.4.2 Modified Activated Sludge Processes. A number of modifications of the conventional activated sludge process have been developed. They include extended aeration, the oxidation ditch, contact stabilization, high rate, two-stage aeration, pure oxygen and deep shaft systems. The extended aeration and oxidation ditch systems are the most commonly used in the treatment of wastewaters from the food processing industry.

4.4.2.1 Extended aeration

1) Process Description

The schematic flow diagram of a typical extended aeration plant is shown in Figure 17. Although it is very similar to the conventional activated sludge process, longer retention times are utilized. Primary sedimentation is generally omitted from the process in order to simplify sludge collection and treatment. However, pretreatment in the form of screening, comminution and grit removal is frequently provided.

The extended aeration process is controlled to operate in the endogenous phase of the growth curve (Figure 2). The process is characterized by a long detention time (one to five days), and a high concentration of MLSS. These result in a lower quantity of sludge for final disposal than the conventional activated sludge process. In addition, the sludge normally contains very low concentrations of putrescible organics. Therefore it can frequently be discharged for direct drying on sludge beds without production of offensive odours.

2) Design criteria for the extended aeration process

Table 11 summarizes typical design criteria for the extended aeration process.

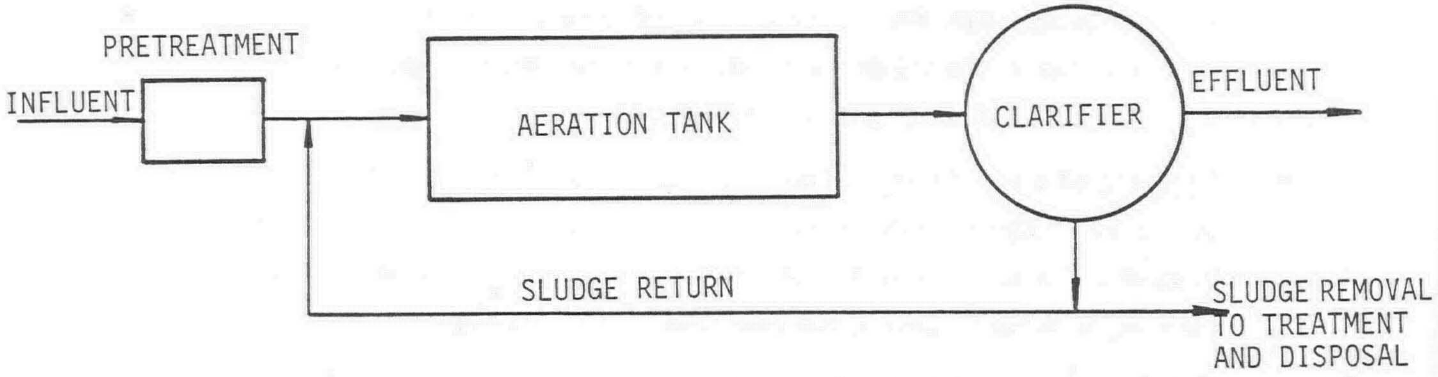

FIGURE 17 FLOW DIAGRAM FOR THE EXTENDED AERATION PROCESS

TABLE 11 DESIGN CRITERIA FOR EXTENDED AERATION PROCESS

Organic Loading Rate:	0.05 - 0.15 kg BOD_5/kg MLSS/d
Volumetric Loading Rate:	0.16 - 0.40 kg BOD_5/m^3/d (10 - 25 lb $BOD_5/1000\ ft^3$/d)
MLSS Concentration:	3000 - 6000 mg/L
Sludge Return Ratio:	75 to 200 % of the process influent (by volume)
Mixed Liquor Depth:	1.5 - 3.0 m (5-10 ft)
Oxygen Requirements:	2.0 - 2.3 kg 0_2/kg BOD applied
Sludge Production Rate:	0.2 - 0.4 kg/kg BOD_5 removed

3) Process performance of the extended aeration process

BOD removals from extended aeration plants are approximately the same as for conventional activated sludge plants. Because of the extremely low loading rates used in the extended aeration process, disintegration of sludge flocs may occur. As a result, effluent suspended solids may be higher than for the conventional activated sludge system. In a properly operating system, an effluent quality consisting of less than 30 mg/L of BOD_5 and less than 60 mg/L of suspended solids can generally be achieved.

4) Operating requirements of extended aeration process

The operating requirements for an extended aeration plant are the same as for a conventional activated sludge plant, with the exception that sludge wasting frequency is significantly reduced. For efficient operating of extended aeration plants, skilled operators are required.

5) Potential operational problems with extended aeration process

Since the principles involved in the design and operation of extended aeration and conventional activated sludge processes are similar, it can be anticipated that typical operational problems would be encountered in both proceses. The following additional factors should be taken into account in the operation of extended aeration plants:

a) A long start-up period is usually required for the treatment plant to operate at its design efficiency. Seeding of the treatment system with activated sludge from a mature plant treating a similar waste can significantly reduce the start-up period.

b) Due to the omission of the primary clarifier, deposition of sands and sludges is likely to occur in the aeration tank if agitation is insufficient. This could create an anaerobic condition, resulting in the production of offensive odours and effluent of inferior quality. The problem may be corrected by increasing aeration rates to provide adequate mixing of the tank's contents or by the provision of grit removal facilities ahead of the aeration tank. Grit removal would be recommended if root crops are processed, due to the high concentration of soil particles in the wastewater.

c) One problem encountered in the extended aeration process is the development of pin-point floc which has poor settling characteristics. This is usually associated with organic underloading of the process, resulting in over-oxidation of the sludge floc. This condition is frequently observed in extended aeration plants treating food-processing wastes on a five-day-a-week basis. The failure to supply food to the process over the weekend period frequently results in the death of some microorganisms with subsequent release of their protoplasm as food for living cells. This causes the disintegration of sludge flocs.

4.4.2.2 Oxidation ditch

1) Process description

The oxidation ditch (Figure 18) is a modification of the extended aeration process. The ditch or channel forms an aeration basin in which the wastewater is circulated and mixed with the microorganisms responsible for conversion of the organic material. Aeration and mixing are provided by a Kessener Brush or cage rotor which entrains oxygen in the wastewater and imparts sufficient velocity to keep the solids in suspension. The mixed liquor may be drawn off either continuously or intermittently to a clarifier where the sludge is settled and returned to the aeration basin.

2) Design criteria for the oxidation ditch process

Table 12 summarizes typical design criteria for the oxidation ditch process.
Process performance monitoring requirements and operational problems of the oxidation ditch are similar to those for the extended aeration process. Sludge

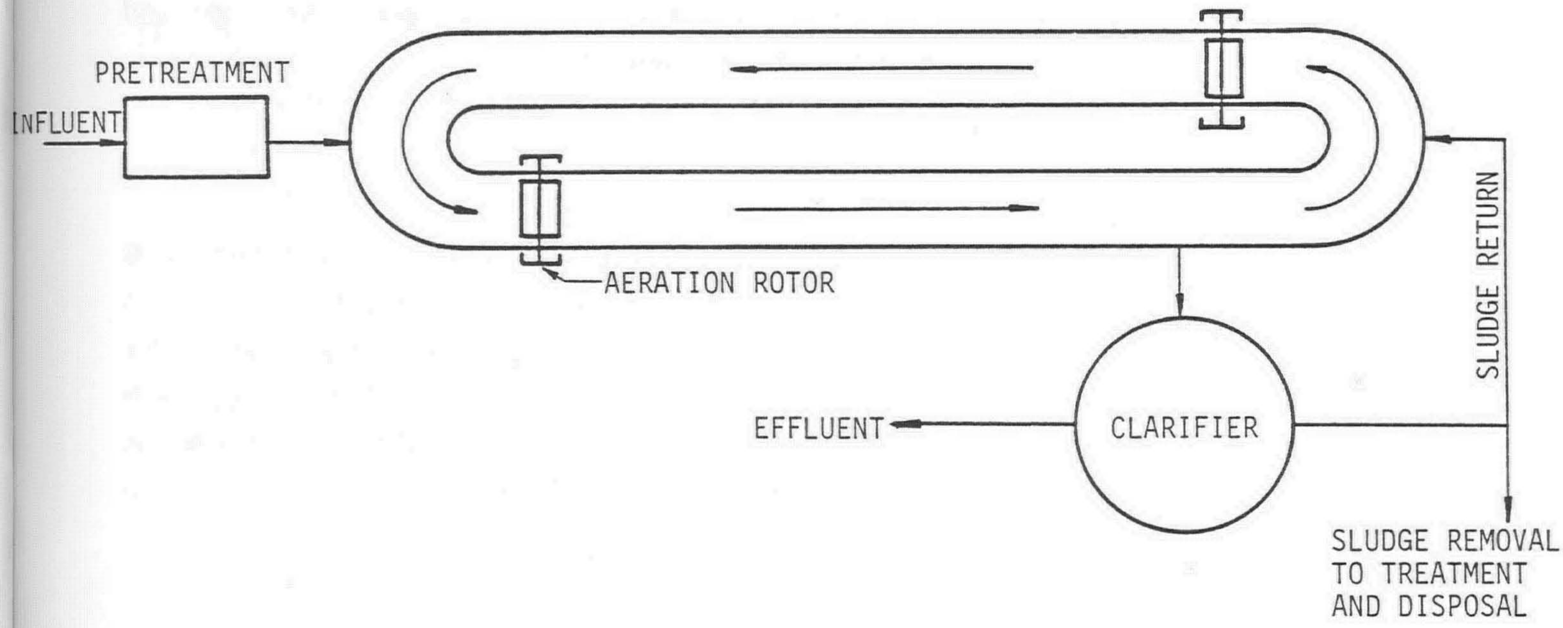

FIGURE 18 FLOW DIAGRAM OF THE OXIDATION DITCH PROCESS

TABLE 12 DESIGN CRITERIA FOR OXIDATION DITCH PROCESS

Organic Loading Rate:	0.05 - 0.2 kg BOD_5/kg MLSS/d
Volumetric Loading Rate:	0.19 - 0.48 kg BOD_5/m^3/d (12 - 30 lb $BOD_5/1000\ ft^3$/d)
MLSS Concentration:	3000 - 6000 mg/L
Horizontal Velocity in the Ditch:	30 cm/sec (1 ft/sec)
Sludge Return Ratio:	75 to 200% of the process influent
Shape of the Aeration Basin:	Oval-shape channel
Mixed Liquor Depth:	1 - 1.5 m (3 - 5 ft)
Oxygen Requirements:	2.0 - 2.3 kg 0_2/kg BOD_5 applied
Sludge Production Rate:	0.2 - 0.4 kg/kg BOD_5 removed

accumulation may occur in quiescent zones within the channel, especially at the corners. This problem may be alleviated by maintaining sufficient rotor length and immersion depth to maintain adequate liquid velocity.

4.4.2.3 High rate treatment

1) Process description

The high rate treatment process has the same flow diagram as the conventional activated sludge process (Figure 13). The reactor, however, is designed to operate at higher organic and hydraulic loading rates than the conventional process. Under these conditions, the microorganisms are kept between the log and declining growth phases. Effluents from the high rate system are poor in quality. This process is generally used to provide a partial pre-treatment of the waste. It is not suitable where a high quality effluent is desired.

2) Design criteria for high rate treatment

Table 13 summarizes typical design criteria for the high rate process.

3) Process performance

Effluent BOD_5 and suspended solids concentrations from the high rate activated sludge process are appreciably higher than those from other activated sludge processes. Soluble BOD_5 removals are usually in the range of 60 to 75%.
Monitoring requirements and operational problems are similar to those for the conventional activated sludge process.

TABLE 13 DESIGN CRITERIA FOR HIGH-RATE ACTIVATED SLUDGE TREATMENT

Organic Loading Rate:	0.6 - 2 kg BOD_5/kg MLSS/d
Volumetric Loading Rate:	1.8 - 7.0 kg $BOD_5/m^3/d$ (110 - 450 lb $BOD_5/1000\ ft^3/d$)
MLSS Concentration:	1000 - 2000 mg/L
Sludge Return Ratio:	100 - 500% of the process influent (by volume)
Oxygen Requirements:	1.0 - 1.5 kg O_2/kg BOD_5
Sludge Production Rate:	0.7 - 1.4 kg/kg BOD_5 removed

4.4.2.4 Two-stage activated sludge process

1) Process description

The two-stage activated sludge process (Figure 19) consists of two conventional activated sludge systems operated in series. Each stage has its own internal sludge return facility, but recycling of sludges between stages is not uncommon. Excess sludge is wasted separately from each stage or combined in either stage before wasting.

In the two-stage system, the first stage is operated at a high organic loading, thus removing the readily decomposed BOD_5 in a relatively short period of time, while the remaining BOD and suspended solids removal occurs in the second stage. Because of this process configuration, the system is more capable of handling hydraulic and organic shock loads than most activated sludge processes.

2) Design criteria

Typical design criteria for the two-stage process are summarized in Table 14.

3) Process performance

The effluent quality from a two-stage activated sludge system is similar to that obtainable in a conventional activated sludge process.

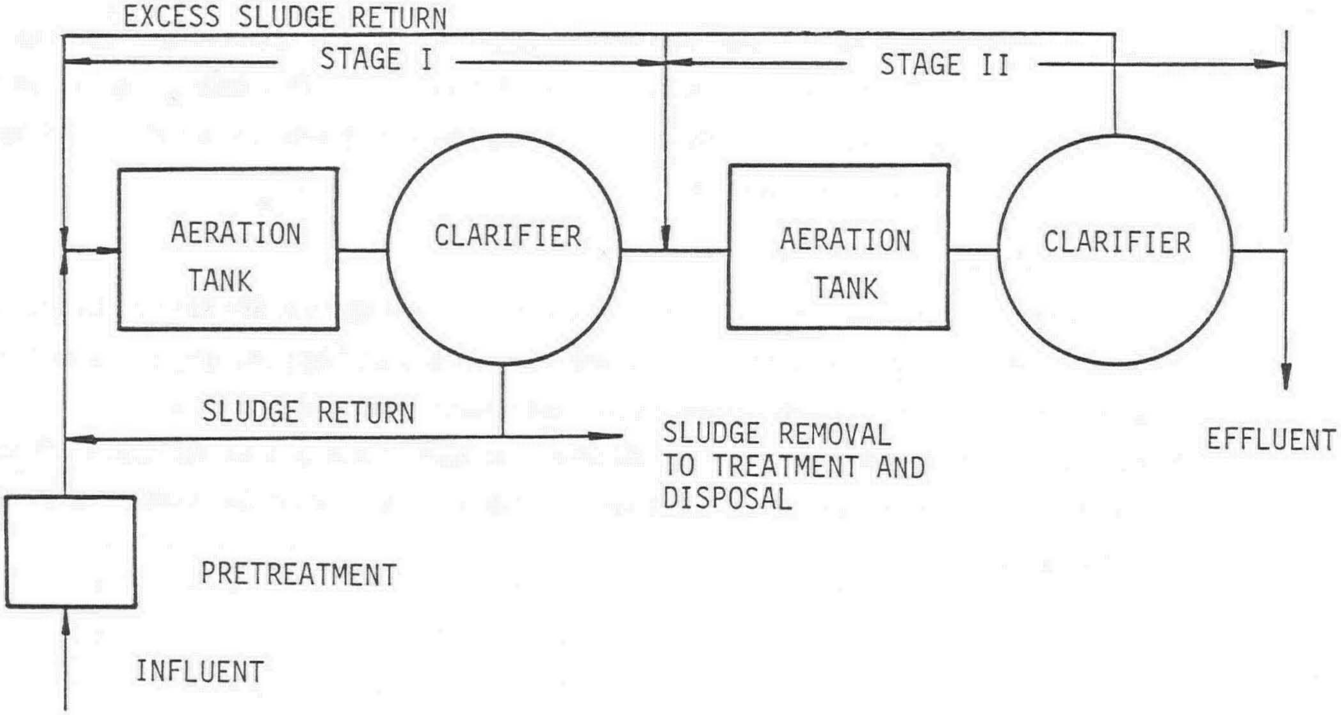

FIGURE 19 FLOWSHEET FOR THE TWO-STAGE ACTIVATED SLUDGE PROCESS

TABLE 14 DESIGN CRITERIA FOR TWO-STAGE ACTIVATED SLUDGE PROCESS

	First Stage	Second Stage
Organic Loading Rate (kg BOD_5/kg MLSS/d)	0.6 - 2.0	0.1 - 0.5
Volumetric Loading Rate		
(kg/BOD_5/m^3/d)	1.8 - 7.0	0.4 - 1.8
(lb BOD_5/1000 ft^3/d)	110 - 450	25 - 110
MLSS concentration (mg/L)	1000 - 2000	2000 - 4000
Sludge Return Ratio (% of process influent by volume)	100 - 500	50 - 100
Oxygen Requirements (kg 0_2/kg BOD_5)	1.0 - 1.5	1.5 - 2.0
Sludge Production Rate (kg/kg BOD_5 removed)	0.7 - 1.4	0.4 - 0.7

4) Operational requirements

Monitoring requirements for the two-stage activated sludge process are basically the same as for the conventional activated sludge process. The determination and adjustment of the sludge concentration and the dissolved oxygen level should be carried out in each stage separately.

5) Potential operational problems

Operational problems for the two-stage activated sludge system are similar to those in the conventional process. The first stage is operated at high loading rates and is therefore vulnerable to drastic changes in wastewater characteristics.

Since the two stages are operated at different loading rates and at different MLSS concentrations, more skilled operation is required to maintain stable process performance.

4.4.2.5 Pure oxygen systems

1) Process description

Pure oxygen systems differ from other activated sludge processes in that pure oxygen is substituted for air in the aeration process. It has a similar process configuration as the conventional activated sludge process. The aeration tank (Figure 20) is divided into compartments by baffles and is covered to increase the oxygen transfer efficiency. Because of the high partial pressure of oxygen above the liquid surface the amount of oxygen which can be dissolved in the reactor contents is about four times the saturation value if air were used. Untreated wastes, recycle sludge and oxygen gas are introduced into the first stage. Mixing is accomplished by using surface aerators or submerged rotating spargers. Effluent mixed liquor is separated in conventional gravity clarifiers and the settled sludge is returned for contact with the untreated waste.

A number of advantages, such as increased microbial activity due to deeper oxygen penetration into the floc, decreased sludge production rate, reduced aeration tank volume, and improved sludge settleability have been claimed by proponents of the system. One of the major advantages of high purity oxygen systems is that a higher dissolved oxygen concentration can be maintained in the mixed liquor. This enables higher MLSS concentrations to be carried in the reactor and higher organic loading rates to be applied.

2) Design criteria

Table 15 summarizes design criteria for the pure oxygen system process. Completely sealed tankage to retain oxygen above the reactor contents is necessary, as is the provision of complete mixing.

3) Process performance

A similar treatment efficiency can be expected in a pure oxygen system as in a conventional activated sludge process.

4) Operating requirements

Operating requirements for the pure oxygen systems are basically the same as for the conventional activated sludge systems, although maintenance of the oxygen generation and/or feeding equipment requires additional time and training. Significantly high DO levels (usually in the range of 4 to 8 mg/L) are maintained in the aeration tank than in the conventional activated sludge process.

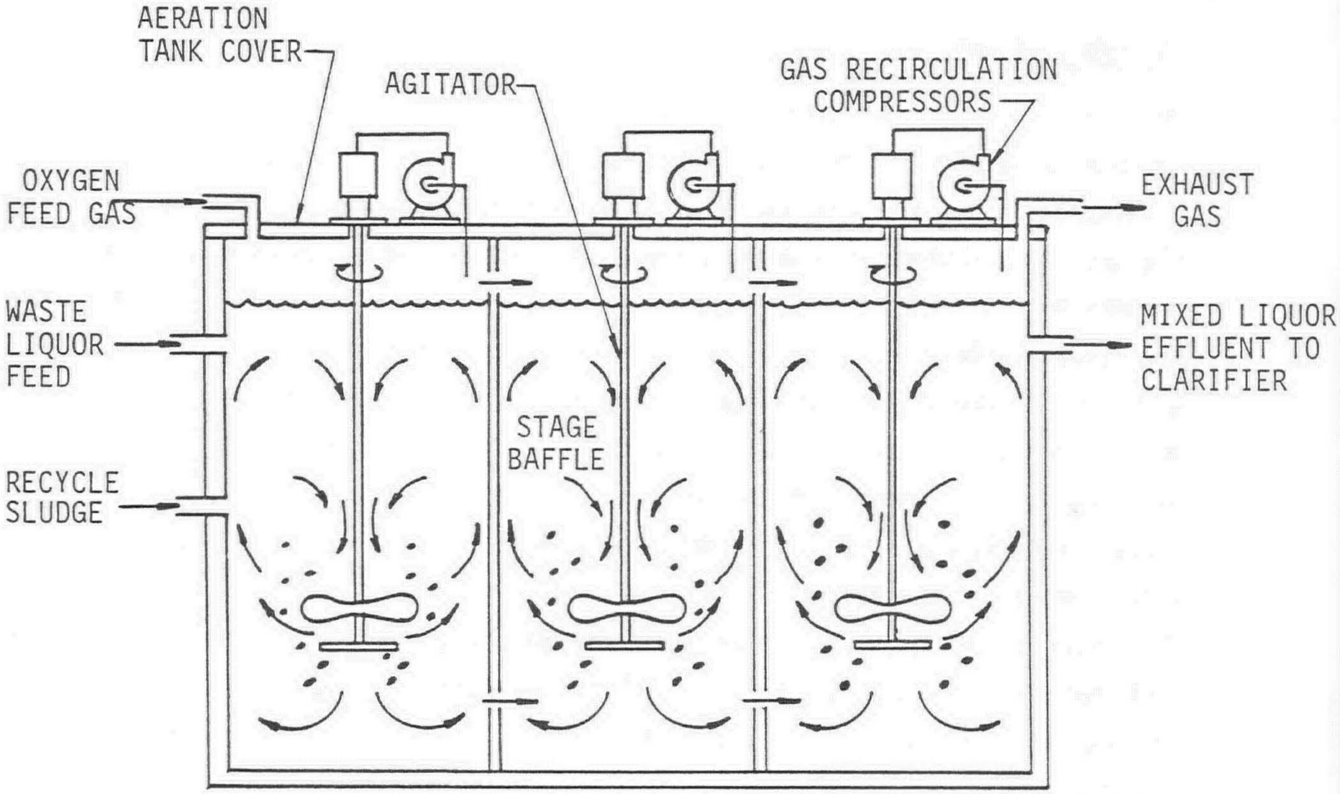

FIGURE 20 AERATION BASIN - PURE OXYGEN SYSTEM

TABLE 15 DESIGN CRITERIA FOR PURE OXYGEN PROCESS

Organic Loading Rate:	0.4 - 0.8 kg BOD_5/kg MLSS/d
Volumetric Loading Rate:	2.0 - 5.0 kg BOD_5/m^3/d (120 - 300 lb $BOD_5/1000\ ft^3$/d)
MLSS Concentration:	4000 - 8000 mg/L
Sludge Return Ratio:	20 - 40% of the process influent
Oxygen Requirements:	1.0 - 1.3 kg 0_2/kg BOD_5
Sludge Production Rate:	0.4 - 0.8 kg/kg BOD_5 removed

5) Potential operational problems

Problems associated with sludge bulking and flow fluctuations are similar to those which occur in the conventional activated sludge process. Since the aeration tank is typically covered to prevent excess loss of oxygen, the build-up of carbon dioxide (CO_2) in the system may result in a significant drop in pH, requiring chemical addition for pH control.

4.5 Fixed Film Systems

Fixed film systems, unlike suspended growth systems, do not require aeration equipment to supply oxygen and keep the biomass in suspension. The microbial population adheres to the surface of a media and the oxygen required for the aerobic degradation of organics is transferred from the air to microorganisms. The oxygen transfer occurs through a thin liquid film surrounding the attached layer of microorganisms as illustrated in Figure 21.

The most common fixed film process used is the trickling filter. In addition, there has been a growing interest in the rotating biological contactor (RBC) as an alternate treatment system for industrial wastes. Although the basic metabolic reactions, microbial growth pattern and responses to environmental conditions for the fixed film system are the same as for the suspended growth systems, there are significant differences in design and operation of the two systems.

4.5.1 Trickling Filter

1) Process Description

The trickling filter process (illustrated in Figure 22), consists of a bed of inert media such as plastic, wood, broken stone, gravel or slag of 5 to 10 cm (2.5 to 4 in) in size, on which a biological slime is grown. The wastewater is distributed over the top of the bed by a rotary or stationary distributor and allowed to trickle down through the bed media. Organic material and oxygen are absorbed and utilized by the attached microorganisms. An underdrain system collects the treated wastewater and excess biological solids that are continuously sloughed from the media. The underdrain system also serves to ventilate the filter, thus providing aeration. Figure 23 illustrates a typical trickling filter.

Pretreatment of wastewater is essential to efficient filter performance. Coarse screening and primary sedimentation are usually employed to reduce organic loadings and to remove the suspended solids which might otherwise clog the distributor and filter media.

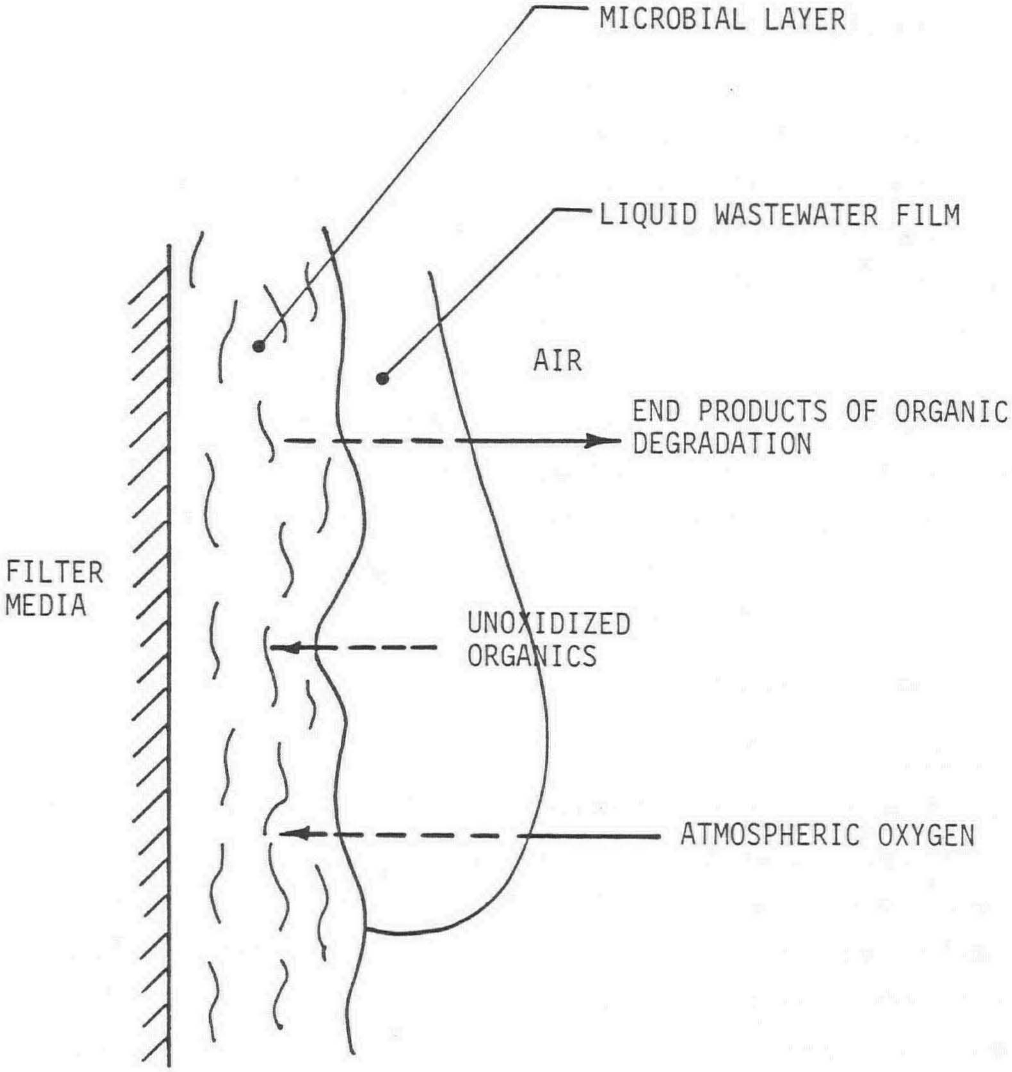

FIGURE 21 PROCESSES INCLUDED IN FIXED FILM WASTEWATER TREATMENT

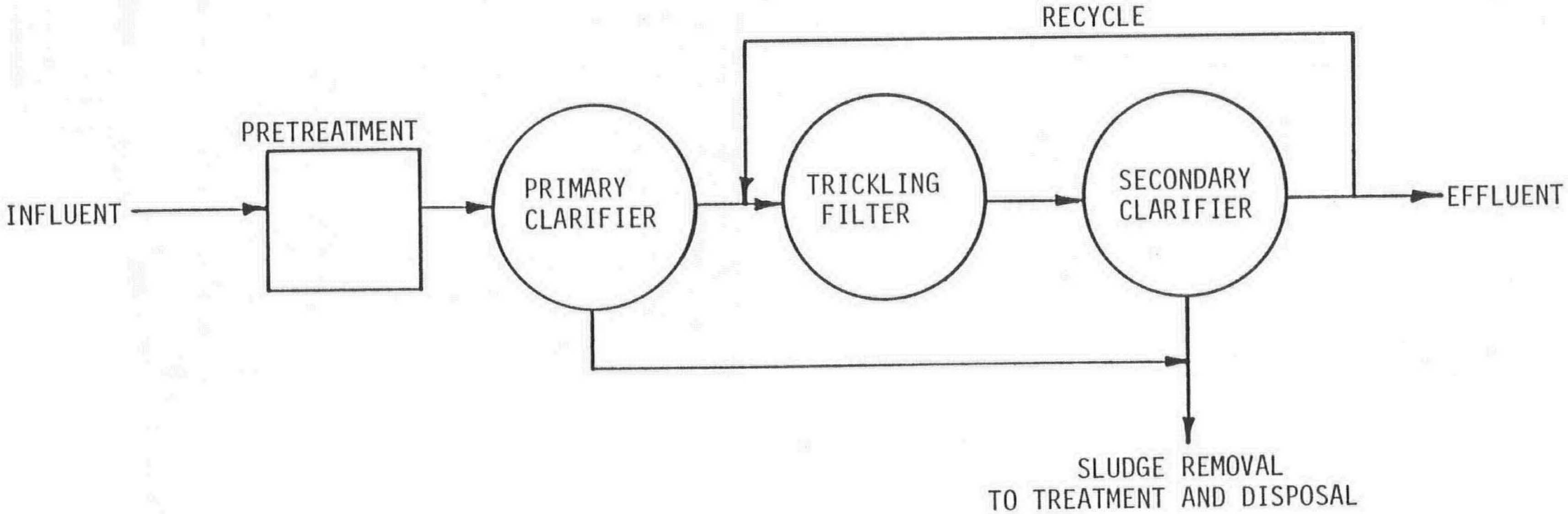

FIGURE 22 FLOW DIAGRAM OF A TRICKLING FILTER PROCESS

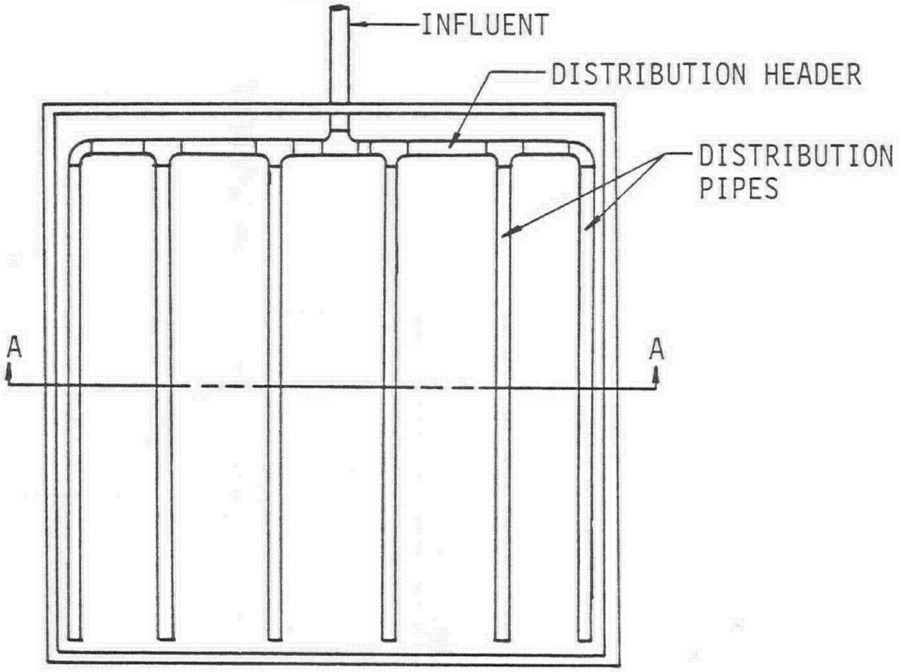

TOP

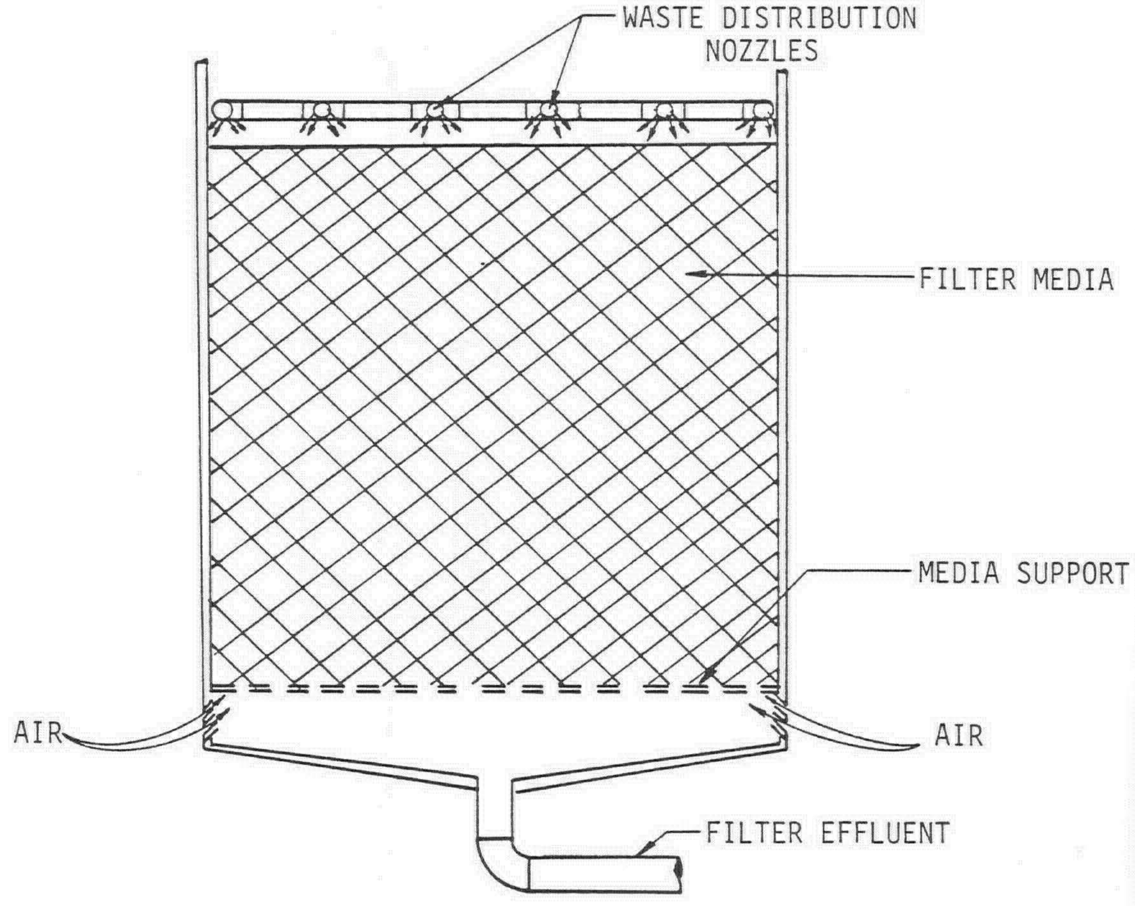

SECTION A-A

FIGURE 23 DETAILS OF A TRICKLING FILTER

Trickling filters are usually classified as low or high rate according to the organic or hydraulic loading rates being applied. The introduction of light-weight synthetic media to replace the rock media has enabled trickling filters to be constructed deeper and to be operated at substantially higher loadings than the rock filled filter. Filters employing a plastic media of high surface area and void space have been built with depths of 6 to 12 metres (25 to 40 feet). The plastic media filters are normally operated as high-rate roughing units for the treatment of high strength wastes such as those encountered in the food processing industry. An example of such a system is discussed in Reference (24).

2) Design criteria

Table 16 summarizes typical design criteria for the trickling filter process.

3) Process performance

The trickling filter process is relatively simple to operate and is usually capable of producing a good quality effluent. It is also relatively insensitive to organic or toxic shock loadings. The sludge bulking problems encountered in activated sludge systems do not occur in the trickling filter process. However, process performance is considerably more temperature dependent than in suspended growth systems, and it may be necessary to enclose and heat the filter to obtain satisfactory effluent quality in winter months.

Typical performance data that can be achieved in properly designed and operated trickling filters treating food processing wastewaters are presented below:

	Low Rate Filters	High Rate Filters	Synthetic Media
BOD_5 Removal (%)	70 - 90	50 - 70	70 - 90
Suspended Solids Removal (%)	70 - 90	50 - 70	70 - 90

4) Operational requirements

One advantage of the trickling filter process is the simplicity of operation. Unlike the activated sludge process, there is no sludge concentration or dissolved oxygen to be measured and adjusted.

TABLE 16 DESIGN CRITERIA FOR TRICKLING FILTER PROCESS

	Rock Media Filters		Synthetic
	Low Rate	High Rate	Media Filters
Organic Loading Rate			
(g $BOD_5/m^3/d$)	100 - 200	300 - 1000	1000 - 2200
(lb $BOD_5/1000\ ft^3/d$)	6 - 12	20 - 60	60 - 140
Hydraulic Loading Rate			
($m^3/m^2/d$)	1.5 - 3.0	5 - 10	10 - 30
(gpd/ft^2)	30 - 60	100 - 200	200 - 600
Depth (metre)	2 - 3	1.2 - 3	6 - 12
Depth (feet)	6 - 10	4 - 10	20 - 40
Recirculation Ratio (% of process influent by volume)	0	100 - 400	100 - 400
Packing Material	rock, slag	rock, slag	plastic or redwood slats
Dosing Interval	not more than 5 min. generally intermittent	generally continuous	continuous
Sloughing	intermittent	continuous	continuous

In the operation of high rate trickling filters, recirculation of a portion of the filter or final effluent is desirable to improve the filter performance. Recirculation is employed to equalize hydraulic loads, improve distribution over the filter surface, and reduce clogging. Of the various recirculation schemes available, the return of final effluent to the filter influent is most common. The ratio and scheme of recirculation is usually determined by trial and error. Once the best scheme is established, there is no need for further adjustment, unless the influent characteristics are modified.

Routine inspection for clogging of orifices or nozzles on rotating distributors should be carried out daily. The underdrain system should be inspected periodically to ensure that drainage channels are neither clogged nor surcharged.

5) Potential operational problems

a) Ponding occurs when the voids between the filter media are completely filled with biological growths. This condition may develop when the filter media are too small or the organic loading is excessive in comparison with the hydraulic loading. This is not a problem with plastic media filters.

b) The filter fly is a nuisance frequently associated with the operation of trickling filters, particularly in low rate filters. Odours can also be a problem due to poor ventilation or the filter bed or poor housekeeping. Unless the nuisance due to odours and flies can be properly controlled, trickling filters should be located away from inhabited areas.

c) Effluent quality may deteriorate significantly during winter operation. In addition, the formation of ice on the filter surface and freezing of distribution nozzles may render the filter inoperative or result in an effluent of inferior quality. It may be necessary to enclose filters or provide forced ventilation with heated air to overcome the problems associated with winter operation.

4.5.2 Rotating Biological Contactor

1) Process description

The schematic flow diagram of a conventional rotating biological contactor (RBC) process is illustrated in Figure 24. The RBC process is, in principle, similar to the trickling filter process and is frequently referred to as a rotating biological surface or rotating biological disc (biodisc).

Basically, the RBC unit consists of a series of closely spaced plastic discs mounted on a horizontal shaft, supported in a semi-circular or trapezoidal tank as shown in Figure 25. Each grouping of discs is identified as a stage and each stage operates in a separate compartment of the tank. The discs-shaft assembly is rotated slowly in the tank filled with the wastewater to be treated. As the shaft rotates, the discs surfaces are alternatively exposed to wastewater and the atmosphere.

Microorganisms naturally present in the wastewater adhere to and grow on the surface of the discs. Due to their rotating action, the discs carry a film of wastewater into the air where it trickles down the disc surface. In so doing, oxygen is absorbed and organics in the wastewater are removed. As the discs pass through the bulk of the wastewater, mixing at the disc surface is promoted and further absorption of organics occurs. As the microbial growth proceeds, the biological film formed on the disc surface eventually sloughs off due to gravity and the shear force

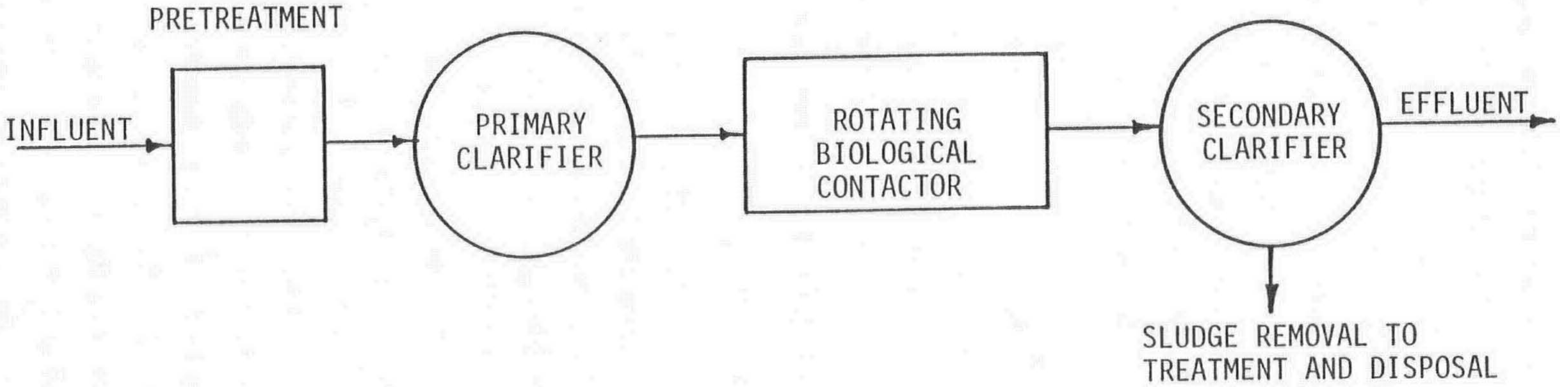

FIGURE 24 FLOW DIAGRAM OF A RBC PLANT

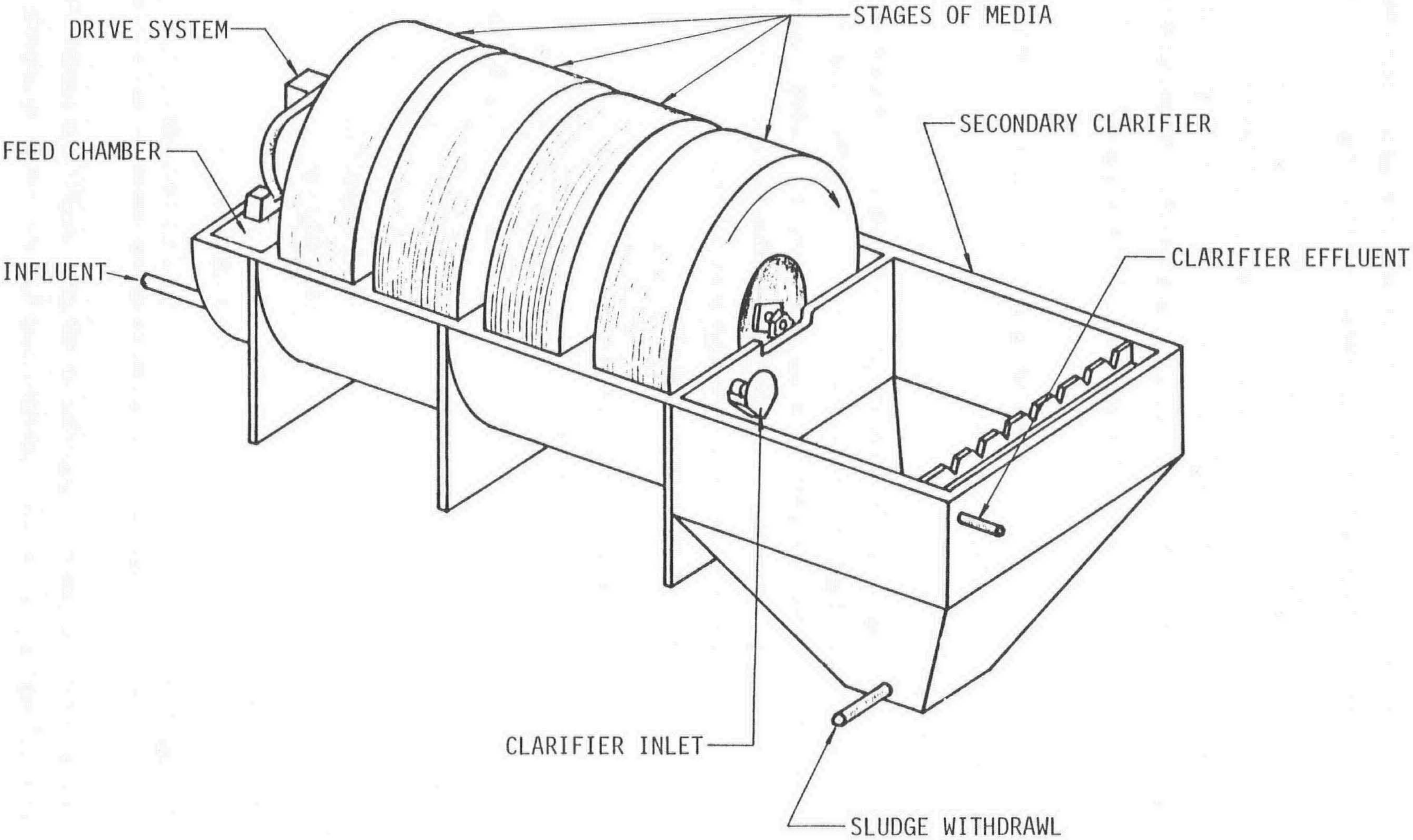

FIGURE 25 DETAILS OF A ROTATING BIOLOGICAL CONTACTOR

generated by the rotating action. The biological film that sloughs from the disc is removed by settling before the treated wastewater is discharged.

2) Design criteria for the RBC

Typical design criteria for the RBC process are presented in Table 17.
Since the RBC is an efficient heat transfer device, the effects of temperature must be considered in the design. The two most important effects of temperature are:

a) reduced biological activity and treatment performance, and
b) the formation of ice.

Therefore, to achieve satisfactory operation under severe climatic conditions, it is essential to provide an enclosure for the unit.

3) Process performance

The RBC is a simple and reliable biological process which has been used successfully for the treatment of food processing wastewaters. Unlike the suspended growth system, the RBC is less susceptible to variable hydraulic loadings. As with the trickling filter process, the RBC is relatively insensitive to organic or toxic shock loads. It can be designed to accommodate high loads and will continue to function satisfactorily at average or low organic loadings.

TABLE 17 DESIGN CRITERIA FOR RBC PROCESS

Organic Loading:	5 - 40 gm $BOD_5/m^2/d$ (1 - 8 lb $BOD_5/1000\ ft^2/d$)
Hydraulic Loading:	20 - 40 $L/m^2/d$ (0.5 - 1.0 gpd/ft^2)
Peripherial Velocity:	10 - 25 m/minute (30 - 80 fpm)
Number of Stages in Series:	3 - 6
Sludge Production Rate:	0.5 - 1.2 kg/kg BOD_5 removed

The RBC process is capable of achieving an effluent quality comparable to that of the activated sludge process, with approximately half the energy requirement of the latter.

At the lower loading range specified in Table 17, 90% or greater BOD_5 removal can be achieved in a properly designed and operated RBC.

4) Operational requirements of the RBC

Like the trickling filter process, simplicity of operation is an advantage of the RBC process. There are no MLSS or dissolved oxygen adjustments, no sludge volume index to measure, no recirculation of sludge or effluent, and sludge bulking is never a problem. The mechanical simplicity of the process calls for only minimal maintenance consisting of regular wasting of sludge from the secondary clarifier and periodic oiling and greasing of the drive mechanisms. This advantage renders the RBC system particularly suitable for small plant operations.

5) Potential operational problems with the RBC

Since half of the disc surface is continuously exposed to the atmosphere, the RBC is an efficient heat transfer device. If the reactor is not properly protected, freezing in the reactor will be a serious problem under winter conditions. An enclosure for the RBC unit is required to avoid heat loss from the reactor under cold weather conditions. Equipment suppliers have recently developed relatively inexpensive insulated covers for RBC units.

4.6 Anaerobic Processes

1) Process description

Although anaerobic waste treatment is one of the major biological wastewater treatment processes in use today, it is one of the least understood. It has been employed for many years in the stabilization of sludges from municipal wastewater treatment plants, and more recently, in the treatment of medium and high strength industrial wastewaters.

Anaerobic treatment processes have the following advantages:

a) higher organic loading than is possible for aerobic treatment,
b) useful end products such as digested sludge and/or combustible gases,
c) stabilization of organic matter,
d) alteration of water-binding characteristics to permit rapid sludge dewatering,
e) solids reduction for easier handling.

Anaerobic process fundamentals have been described briefly in Section 4.2. Microbiologically, the anaerobic process is complex. Many species of microorganisms may be involved in effecting the conversion to methane and carbon dioxide. In the first of two steps, the complex organic wastes are converted to intermediate compounds referred to as volatile acids. This is identifed as the acid formation step. In the second step, the "methane formers", a group of substrate specific, strictly anaerobic bacteria, convert the volatile and intermediates to methane and carbon dioxide. This is referred to as the methane fermentation step. For purposes of design and control of the anaerobic process, it has been determined that the slowest or rate limiting step is the methane fermentation step. Figure 26 illustrates a schematic representation of the methane production pathway for a complex waste.

Treatment efficiency and process stability are dependent upon the maintenance of a delicate biochemical balance between the rate of volatile acid production and its rate of conversion to methane and carbon dioxide. Process imbalance is usually indicated by a buildup of volatile acids resulting from an imbalance in the two reaction rates. Operational factors usually associated with process failure include insufficient acclimation of the methane formers to new substrates, overloading, and rapid temperature fluctuations. Excessive concentrations of volatile acids, ammonia, alkaline earth-metal salts, heavy metals and sulphides have also been implicated as the frequent cause of inefficiency in, or failure of, anaerobic treatment.

Anaerobic treatment can be adapted to several process configurations. The anaerobic lagoon, discussed earlier is problably the most widely used process configuration in food processing wastewater treatment. Suspended growth processes (conventional and anaerobic activated sludge) are used in treating municipal sewage sludges. They are illustrated schematically in Figure 27. The biological reactors are completely or partially mixed closed tanks usually constructed of concrete. In the anaerobic-activated sludge process, the mixed liquor is thoroughly mixed by gas recirculation, pumping or draft-tube mixers. A portion of the settled sludge from the clarifier or sludge thickener is heated and returned to the mixed reactor to achieve increased reaction rates.

Anaerobic filters (Figure 28) usually employ stone or granular media to provide surfaces for biological growth. They are a relatively new innovation which have not been widely used to date. Their application is generally restricted to wastes of low suspended solids content to prevent clogging of interstices in the packed media.

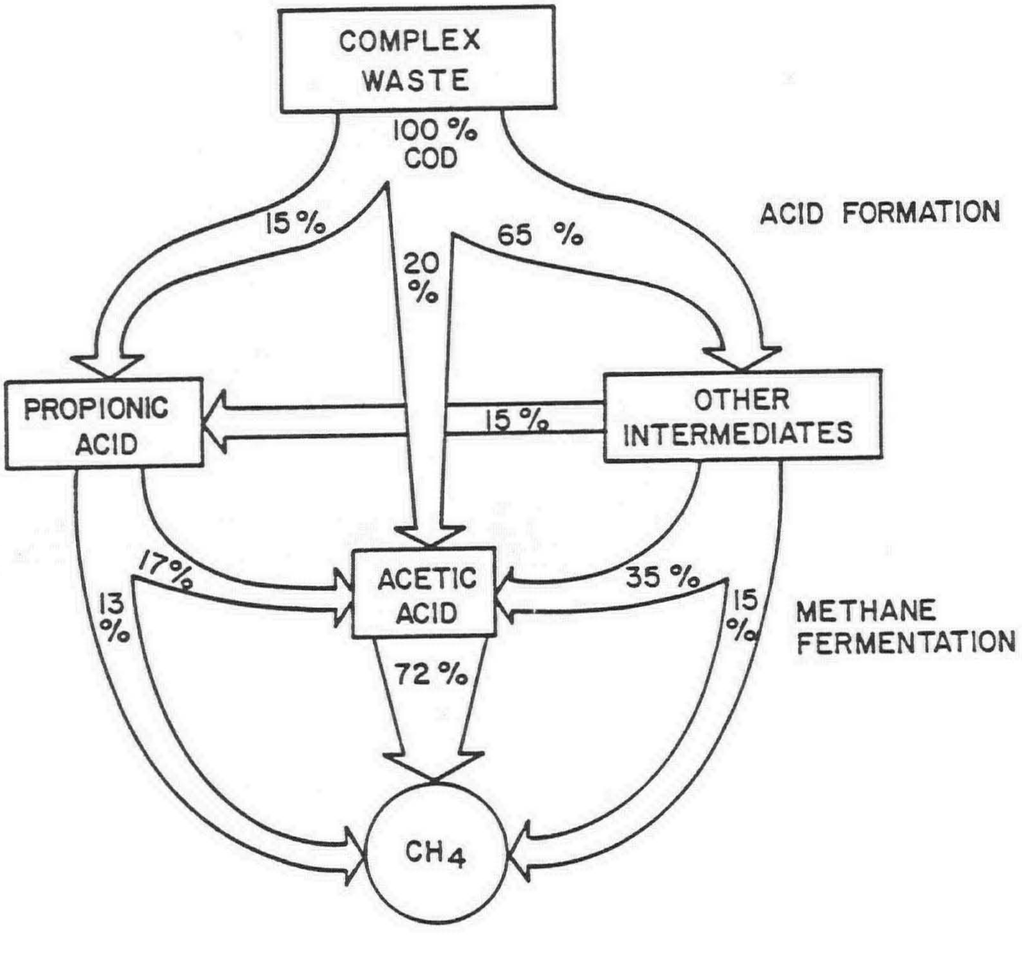

FIGURE 26 PATHWAYS IN ANAEROBIC DIGESTION OF COMPLEX WASTEWATERS (25)

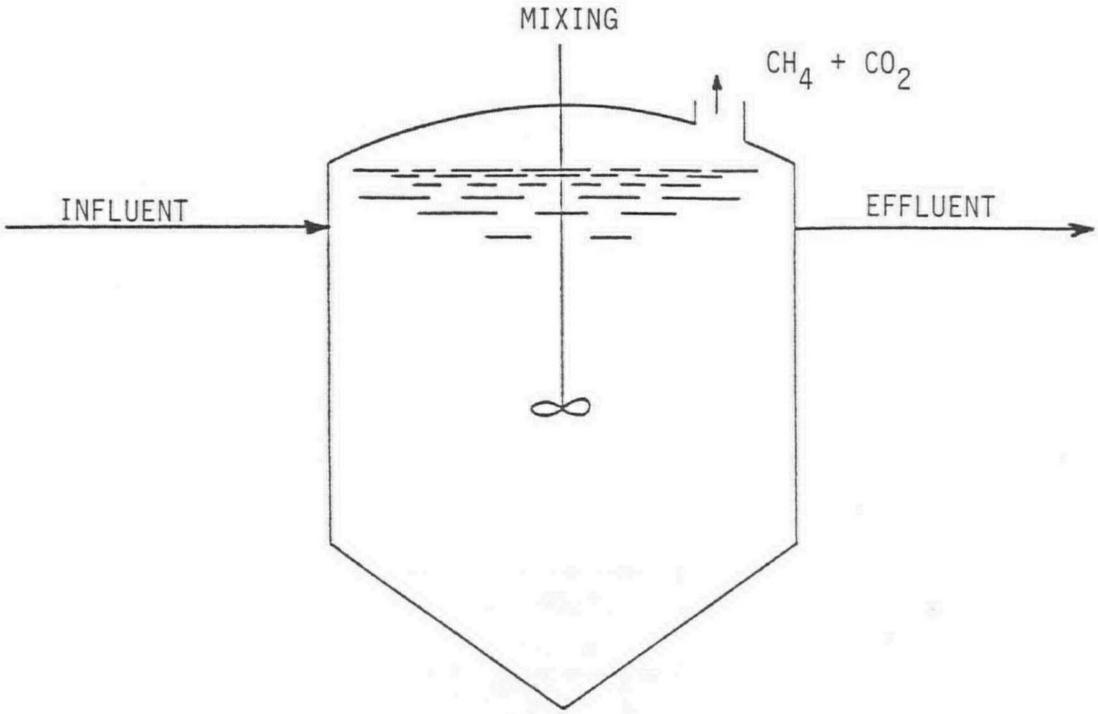

CONVENTIONAL PROCESS

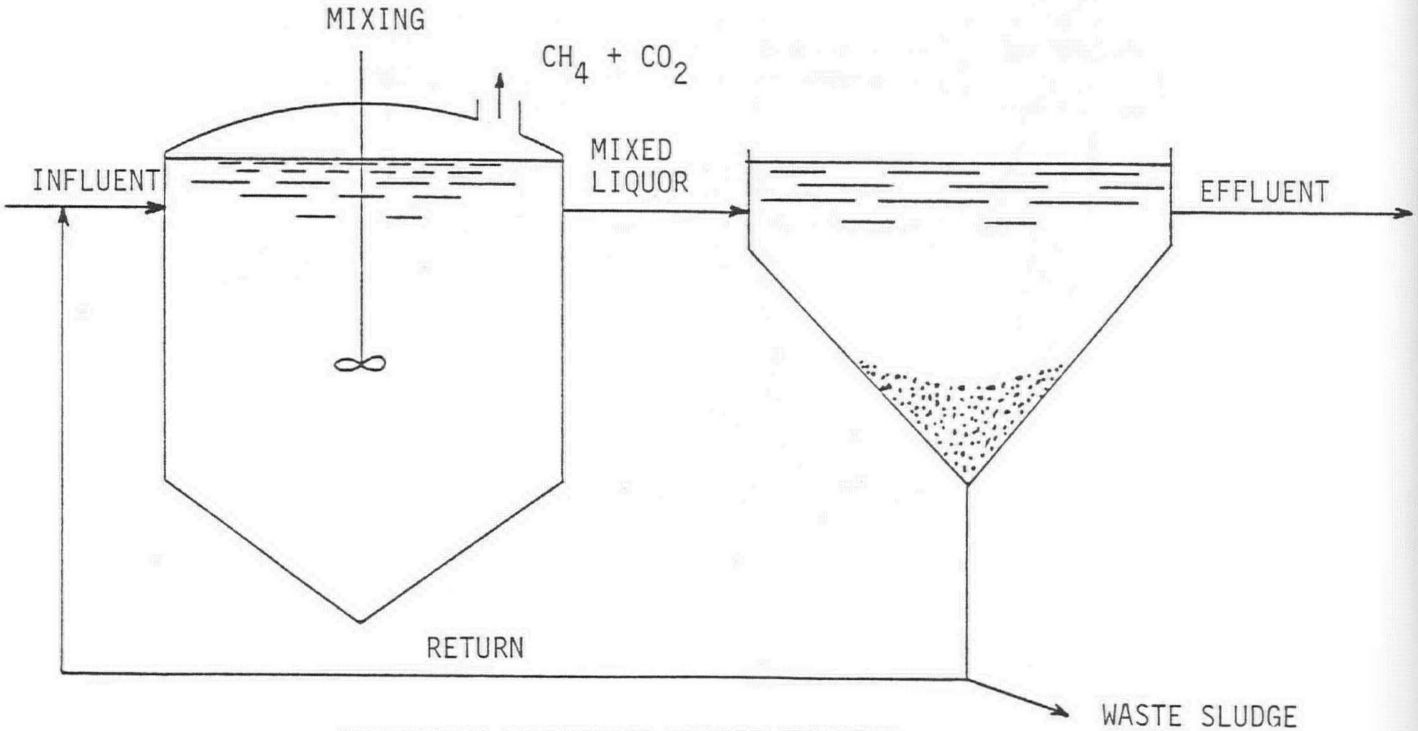

ANAEROBIC ACTIVATED SLUDGE PROCESS

FIGURE 27 REPRESENTATION OF TWO ANAEROBIC PROCESS CONFIGURATIONS

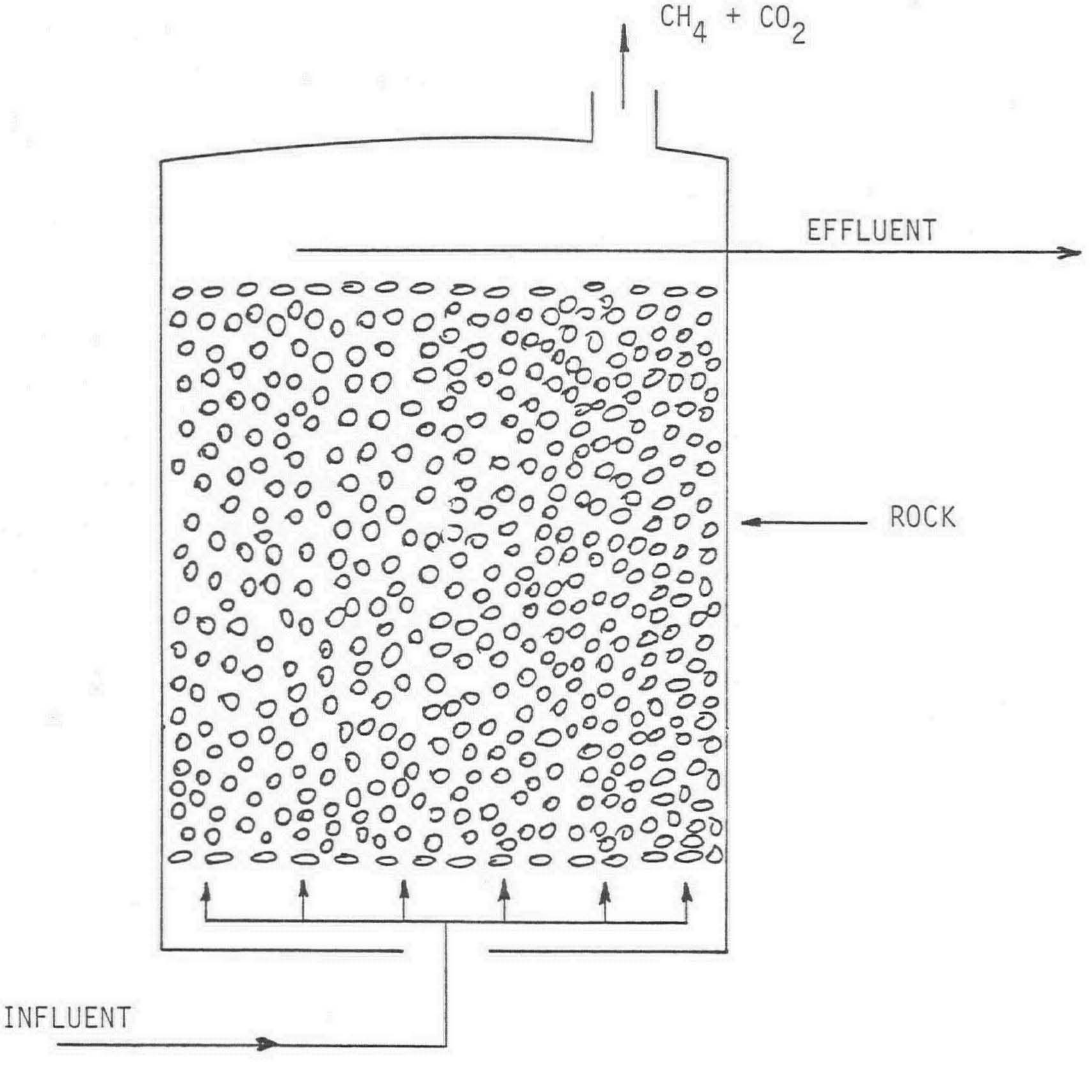

ANAEROBIC FILTER PROCESS

FIGURE 28 REPRESENTATION OF ANAEROBIC FILTER

They appear to have potential for treatment of some of the soluble high strength wastewaters for the food processing industry. COD removal efficiencies greater than 90% have been obtained with hydraulic detention times greater than 18 hours and with wastes having COD concentrations up to 2000 mg/L (26).

2) Design criteria

Since the fundamental principles of biochemisty of suspended growth anaerobic systems have not been well understood, a number of emperical methods have been used in process design. These methods are based on the following:

a) volumetric loading rates,
b) hydraulic detention time,
c) the concept of mean cell residence.

Of these, probably the most common parameter used to size anaerobic activated sludge systems is volumetric loading rates. Loadings have been expressed as pounds of volatile solids added per day per cubic foot of reactor capacity or as pounds of volatile solids added per day per pound of volatile solids in the reactor. In order to prevent washout, these loading factors should be applied in conjunction with the hydraulic detention time. The recommended solids loading for "standard rate" reactors are from 0.5 to 1.6 kg of volatile solids/m^3/day (0.03 to 0.10 lb/ft^3/day). Hydraulic detention times vary from 30 to 90 days. For high-rate digestion, loading rates of 1.6 to 6.4 kg of volatile solids/m^3/day (0.10 to 0.40 lb/ft^3/day) and hydraulic detention periods of 10 to 20 days are practicable.

3) Process performance

Operational factors which affect the performance of anaerobic waste treatment include the following:

a) mixing,
b) loading,
c) temperature,
d) solids retention time,
e) nutrient availability,
f) buffer capacity.

Typical loading rates were discussed in the previous section. Mixing is important in a "high rate" system in order to maintain operational efficiency.

Temperature affects the performance of all biological systems since it affects the activity of the microorganisms. Satisfactory anaerobic treatment can occur in a range of temperatures if an adequate mass of active microorganisms and sufficiently long solids retention time are provided for the system. In the mesophilic range, methane fermentation proceeds best at a temperature of 35°C. However, the range of 25° to 35°C has been used successfully with a number of anaerobic processes. Reasonably constant temperature control is important to the process.

Nutritional requirements are related to the net growth of microbial cells. Since food processing wastes are often not nutritionally balanced, nutrient addition becomes important in the design and operation of anaerobic systems.

Adequate buffering capacity is required to neutralize the excess volatile acids production which may occur under adverse conditions. The buffering capacity can be expressed as the alkalinity of the system. The parameters of pH, alkalinity and volatile acid are related. High and increasing volatile acid concentrations usually indicate that the methane bacteria are being limited or inhibited whereas low and/or decreasing volatile acids concentrations are indicative of satisfactory anaerobic metabolism. Signs of anaerobic process failure include decreasing alkalinity, decreasing pH, increasing pH, increasing volatile acids and increasing carbon dioxide content of the digester gas. In a healthy, well-operated anaerobic digestor, the pH will generally lie between 7 and 8, with a volatile acid concentration of less than 1000 mg/L and a carbon dioxide concentration of less than 40% in the digestor gas. A volatile solids reduction of 40 to 80% can be attained with greater than 70% removal of biodegradable organics.

While anaerobic processes are capable of achieving high rates of waste stabilization, it should be noted that the effluents from such processes are sufficiently concentrated in pollutants to require further treatment. Anaerobic effluents require aerobic treatment prior to being discharged to the environment.

4) Operational requirements

Certain control procedures are available to aid in attaining successful anaerobic waste stabilization. Temperature control is necessary to maintain optimal metabolic activity of the "methane formers". In lagoon systems, temperature control procedures are minimal and are largely restricted to minimizing heat loss by proper design depth or by covering the surface with an insulating material. In closed tank systems, temperature control is accomplished with heat exchangers fired by the biologically produced methane gas and/or supplementary natural gas.

As discussed earlier, process imbalance occurs whenever the rate of volatile acids production exceeds their rate of conversion to methane. Control procedures are designed to detect the imbalance rapidly and to monitor the effectiveness of remedial procedures. Properly functioning anaerobic processes produce gas at the rate of approximately 1.1 $m/^3$/kg of volatile solids destroyed (18 ft^3/lb VS destroyed) or 0.35 m^3/kg of COD destroyed (5.6 ft^3/lb COD destroyed). The fraction of gas by volume which is methane is also important. Normal digester gas contains approximately 50 to 75 percent methane. A decrease in the methane fraction accompanied by a corresponding increase in the carbon dioxide fraction signals process malfunction.

Control of pH within the range of 6.6 - 7.4 is desirable although anaerobic reactors treating swine wastes have been operated quite successfully in a pH range of 8.0 to 8.3 (27). Alkalinity of the mixed liquor is also important in assessing process stability since alkalinity measures the ability of the mixture to neutralize volatile acids with minimal changes in the pH of the system. Perhaps the most sensitive indicator of process performance is the volatile acid concentration itself which indicates the relative effectiveness of the two microbial groups.

The volatile acid/alkalinity ratio should also be monitored. A rising ratio is indicative of approaching trouble, and prompt action should be taken to bring it under control.

Process control is contingent upon detecting the development of imbalance between the rates of volatile acid production and degradation and then correcting the imbalance.

5) Potential operational problems with anaerobic processes

Most of the operational problems experienced in anaerobic treatment are associated with process imbalance. Temporary imbalance may result from conditions such as overfeeding of organic wastes or rapid decline of fermentation temperature. It can be relieved by temporary reduction in the organic feeding rate. Permanent imbalance may result from the continued introduction of oxygen into the process system (which also creates a potentially explosive condition) or from toxic effects of various materials. Control of toxicity may be accomplished by dilution of the toxic material to below the toxic threshold. Materials such as heavy metals can be effectively controlled by precipitation with sulphide which is introduced into the anaerobic system, or is biochemically produced by sulphate reduction.

Some of the unique characteristics of food processing wastewaters have accentuated the problem of process imbalance. Scientists at the National Research Council in

Ottawa concluded that the main problem with the anaerobic digestion of pear, potato, and beet-peeling waste, bean-blanching waste and rum-stillage waste was long-term instability and subsequent lack of reproducibility and control even under closely controlled laboratory conditions (28). Fruit and vegetable and meat and poultry processing wastewaters exhibit variable flow and variable organic strengths, both of which are perceived as detrimental to stable treatment. Secondly, nitrogen and phosphorus, the two essential microbial growth nutrients, seldom occur at ideal concentrations for anaerobic bacterial growth. For example, fruit and vegetable processing wastewaters are usually nutrient deficient while meat, fish and poultry-processing wastes usually contain excess nutrients. Although these nutrients appear to play a functional role in maintaining process stability, the mechanisms have not been fully understood.

Excessive concentrations of volatile acids, ammonia, alkaline earth-metal salts, heavy metals and sulphides have been implicated as the frequent cause of inefficiency in, or failure of, anaerobic treatment. Table 18 summarizes some of the effects of alkali and alkaline-earth cations, heavy metals and sulphides on process stability. Excessive concentrations of ammonia nitrogen (greater than 3000 mg/L) and volatile acids have also been considered toxic to the anaerobic process although the mechanisms of toxicity have been poorly understood.

Although anaerobic lagoons have been used widely, usually in combination with aerobic treatment processes, anaerobic activated sludge processes have found limited application. This has been due partially to a lack of understanding of factors associated with biological process stability.

TABLE 18 EFFECTS OF SELECTED INORGANIC MATERIALS ON ANAEROBIC PROCESS STABILITY (27)

ALKALI AND ALKALINE-EARTH CATIONS

(Concentrations - mg/L)

Cation	Stimulatory	Moderate Inhibition	Strong Inhibition
sodium	100-200	3500-5500	8000
potassium	200-400	2500-4500	12000
calcium	100-200	2500-4500	8000
magnesium	75-150	1000-1500	3000

HEAVY METALS

The soluble ionic forms of copper, nickel, zinc, and hexavalant chromium are toxic to anaerobic processes at very low concentrations.

SULPHIDES

Concentration mg/L	Effect
0 - 100	No adverse effect
100 - 200	Tolerated with acclimation
> 200	Highly toxic

5 PRETREATMENT AND POST-TREATMENT REQUIREMENTS

5.1 Introduction

The alternative methods of biological treatment have been discussed in Section 4 of this manual. Associated with most biological treatment systems are a number of unit processes for pretreatment and post-treatment of the wastewater and the sludge removed from the treatment processes. Those processes which will be examined in this section include:

a) flow equalization,
b) screening,
c) gravity separation,
d) flotation,
e) disinfection,
f) sludge treatment and disposal.

Since detailed discussions of screening, gravity separation, flotation, and disinfection are present in Reference (2), they will be dealt with only briefly in this manual. The reader is referred to the aforementioned publication for further information on these processes.

5.2 Flow Equalization

5.2.1 Advantages. As the result of intermittent clean-up operations, dumping of product wash tank contents, and other irregular wastewater contributions, flow variations in the food processing industry are frequently severe. These variations may occur on an hourly, daily or even seasonal basis depending on production schedule and the commodity being processed.

Flow variations are usually most severe in plants operating on a less than 24 hour/day processing schedule. In such cases, general plant clean-up usually occurs at the end of processing shifts which may result in flow rates many times greater than the average rate. Following this, an overnight period of negligible flow may be encountered in which neither processing nor clean-up is occurring.

The ability to dampen these flow variations and create a nearly constant rate of flow through the treatment process can result in significant improvements in the performance of existing plants, as well as reduce the size and cost of new plants.

The performance of existing clarifiers, for instance, which are hydraulically overloaded during periods of peak flow can be improved by reducing the maximum overflow rate to an acceptable level. A secondary benefit derived through the use of flow equalization is that of concentration dampening. Slugs of high strength wastewater or toxic materials are mixed with the contents of the flow equalization basin prior to reaching the biological reactor stage of the treatment process, thus protecting it from upset or failure due to shock loadings of these materials. This effect, in conjunction with flow smoothing, can improve the consistency of effluent quality from biological treatment systems. Furthermore, the addition of reagents to the treatment system, either for nutrient supplimentation or pH control, is greatly simplified when dealing with a relatively constant rate of flow, as this precludes the necessity for flow-proportional chemical feeders.

In the design of new plants, considerable savings can be achieved in the construction cost of other components of a treatment facility if flow equalization is used. This enables the units to be sized on the basis of average, or equalized flow, rather than peak flow rates, resulting in reduced size requirements for these components. This saving can assist in offsetting the cost of the flow equalization facilities.

5.2.2 Design Considerations. Flow equalization facilites may take the form of specially designed and constructed basins or simply abandoned tankage such as old aeration tanks, clarifers or lagoons. Some sectors of the Canadian dairy industry, for example, have employed old tank cars and fuel storage tanks as flow equalization basins.

They may be installed so as to provide either in-line equalization, in which the entire wastewater flow proceeds through the basin, or side-line equalization in which only that fraction of the flow which exceeds the daily average is diverted through the basin. While the latter minimizes pumping requirements, it is less effective at concentration damping. The required storage volumes for both types of basins are identical.

Flow equalization basins must be constructed with sufficient volume as to permit the accumulation of all flows above the average or equalized flow rate. This accumulated flow can then be delivered to the subsequent treatment unit when the incoming flow rate falls below this average rate.

The first step in determining storage requirements is the establishment of a diurnal (daily) flow pattern. This requires a continuous record of flow rate throughout the day for a number of "typical" operating days. This information should be gathered in conjunction with a wastewater characterization study. In cases where flow rates vary significantly from season to season, due to changes in processing schedules, the flow pattern selected must yield sufficient storage volume to equalize any reasonable flow which might be encountered throughout the year. This may necessitate the measurement of wastewater flow for a number of months in order to develop the diurnal flow pattern which is to be used for design purposes. An example of a typical daily flow pattern which might be encountered in a food processing plant is illustrated at the top of Figure 29.

In this example, the average daily flow is 145 m^3/day, while the peak and minimum flow rates are 1.8 and 0.35 times the average, respectively.

Once a diurnal flow pattern has been established for design purposes, the next step is to construct a hydrograph or inflow-mass diagram. This involves conversion of hourly flows to equivalent hourly volumes and plotting the accumulated volume versus time over the 24-hour period. The hydrograph, for the above example, is illustrated at the bottom of Figure 29.

The slope of the line drawn from the origin to the end-point of the hydrograph represents the average daily flow. The storage volume required to equalize this flow is determined by drawing two lines parallel to the average flow line and tangential to the extremities of the curve on either side of this line. This is illustrated by lines A and B on Figure 29. The vertical distance between these two lines represents the required storage volume.

In practice, the actual equalization basin should be constructed somewhat larger than the required volume calculated from the above. This is usually required to provide some dead storage in the basin and to allow for unforeseen changes in wastewater flow rate.

One particularly effective means of providing flow equalization which has been successfully used in some sectors of the food processing industry is the joint use of anaerobic ponds for pretreatment and flow smoothing. This has worked particularly well in the meat and poultry processing industry, where the warm, high strength wastewater is particularly amenable to anaerobic treatment. In addition, the anaerobic ponds can be used for digestion and disposal of sludge.

However, special design features should be taken into consideration if anaerobic ponds are to be used for flow equalization as well as pretreatment. They must be sized to provide the nominal detention time required for pretreatment of the wastewater, while providing sufficient reserve capacity for storage of excess flows and an allowance for sludge storage in the cell bottom. They must be designed with adequate freeboard to permit fluctuation of liquid levels and an outlet structure which maintains a nearly constant rate of discharge from the pond.

While anaerobic ponds have been used successfully, as discussed above, in a number of rural areas, land requirements and the potential for development of odour

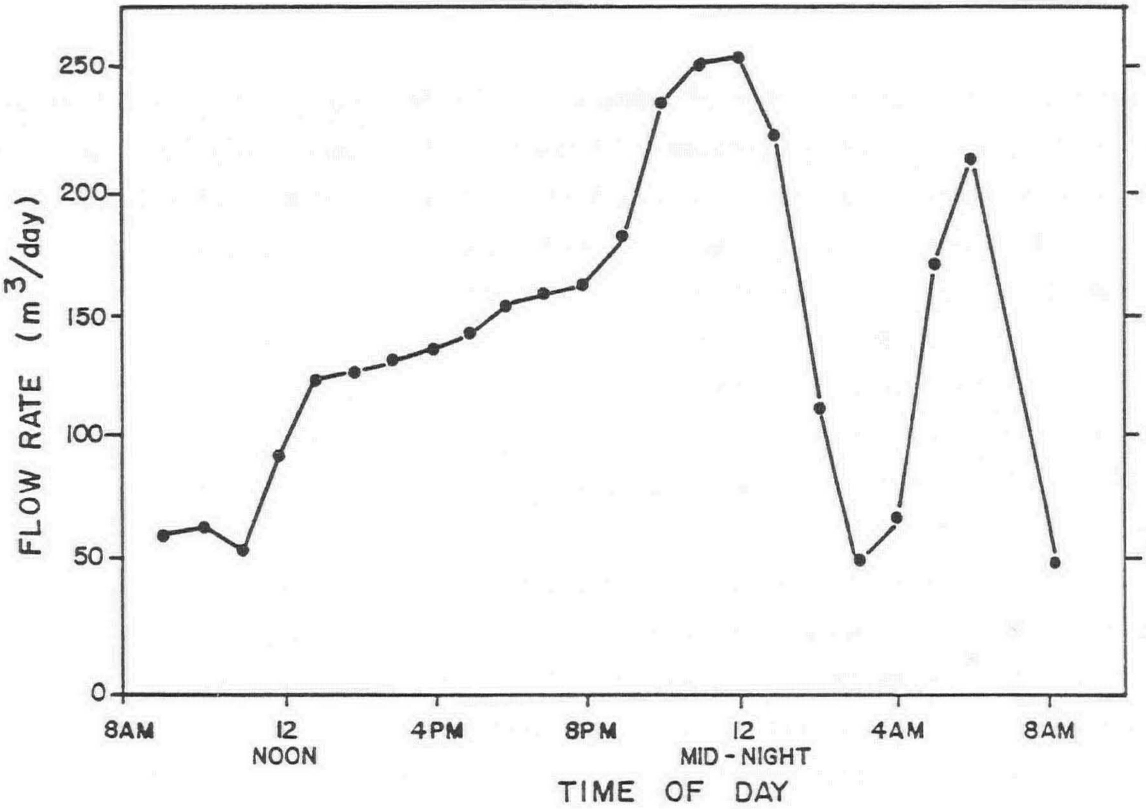

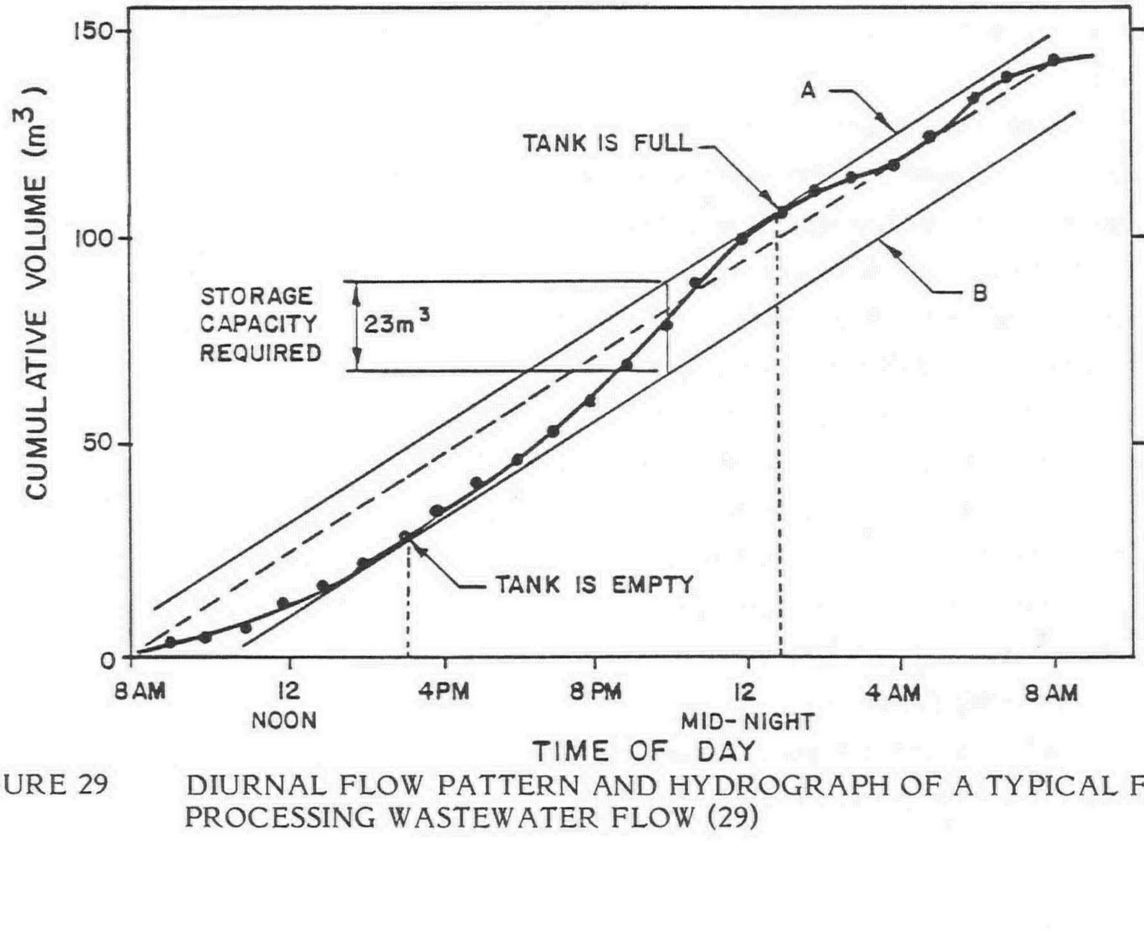

FIGURE 29 DIURNAL FLOW PATTERN AND HYDROGRAPH OF A TYPICAL FOOD PROCESSING WASTEWATER FLOW (29)

problems may preclude their use in more urban areas. In such cases, flow equalization basins are generally aerated to provide thorough mixing of the contents and to prevent the wastewater from becoming septic.

If properly designed, constructed, and operated, flow equalization facilities can result in significant improvements in effluent quality from biological systems treating food processing wastewaters. They have potential for both reducing the size and cost of new treatment plants as well as upgrading existing plants which are approaching their hydraulic design capacity.

5.3 Screening

Screening is widely applied in the food processing industry, particlularly in the meat and poultry, and fruit and vegetable sectors, as the first step in the wastewater treatment process. As the name implies, the objective of screening is to remove solids from the wastewater stream by means of straining.

Most solids found in food processing wastewaters are organic in nature. As such, their removal from the liquid effluent is important for two reasons. If not removed from the wastewater, these solids will break down and dissolve in the waste, thus exerting a significant BOD_5 load which must be removed by the subsequent, more expensive, biological treatment step. Moreover, these solids are generally high in protein and nutrients and represent valuable byproducts if recovered.

The amount of solid material which will dissolve in the waste is directly proportional to both the contact time with water and the amount of agitation encountered. For this reason, it is important to locate screens as close as possible to the source of the wastewater, thus minimizing the opportunity for this breakdown to occur.

Screening materials commonly used are parallel rods or bars (grating), wire mesh, and perforated plates. They are generally classified according to the size of openings, with holes greater than 1/4 inch referred to as coarse screens and those with smaller openings identified as fine screens. The screen size selected for a particular application is a function of the size of solids, blinding (clogging) potential of the screen, and the percentage solids removal desired. Coarse screens are frequently used to remove gross solids and reduce the potential for blinding problems prior to passing the wastewater through finer screens.

Many types of screening equipment are available and have been used frequently by the food processing industry. A summary of the major screen types is presented below.

Stationary screens. Stationary screens, also referred to as inclined or tangential screens, consist of a fixed piece of screening media (wire mesh or synthetic cloth) positioned at a relatively steep angle to the horizontal. The wastewater is directed onto the upper portion of the screen from where it flows down and through the screening media. Liquid passing through the screen is collected and discharged as screened effluent, while solids which accumulate on the screen surface are displaced by oncoming solids and discharged from the lower end as a sludge.

Vibrating screens. Vibrating screens use a horizontally mounted, perforated plate or wire mesh screen for solids removal. The screen is mounted on springs and is caused to vibrate by an eccentric motor drive. The raw waste is directed onto the upper surface of the screen, allowing the liquid fraction to drain through by gravity and be discharged as screened effluent. The vibrating motion of the screen causes the removed solids to migrate towards centre or periphery of circular units or the end of rectangular units, where they are removed as a sludge.

Drum or rotating screens. The drum or rotating screen consists of a cylindrical screen rotating slowly about its axis. Two common wastewater flow configurations are used with this type of mechanism. In the simplest unit, the trommel screen, the wastewater is directed onto the upper, outer surface of the drum and allowed to drain through the screen. Solids are discharged from the outside of the drum at the lower end of the rotational cycle.

In the more sophisticated, but also commonly used microstrainer, the drum rotates semi-submerged in a basin of wastewater. Depending upon the configuration used, screened wastewater may pass from the inside of the drum toward the outside, or the reverse. The solids are retained either on the inside or outside of the drum, depending upon the direction of liquid flow, and are removed by means of either a waterspray and trough or a scraper.

The choice of screen type, mesh size and flow configuration should be based on the following considerations:

a) capital and operating costs,
b) space requirements,
c) blinding potential,
d) solids removal capability.

5.4 Gravity Separation

Suspended solids and non-emulsified greases and oils can frequently be removed from a wastewater by simple gravity separation. Grit chambers, clarifiers and grease traps are the most common components of a treatment system employing gravity separation for wastewater purification. All use the differences in density between the wastewater and its insoluble contaminants to remove these materials as either a settled sludge or a floating scum.

Grit chambers are used to remove heavy suspended material such as dirt, sand and stones from wastewater by sedimentation. The primary purpose of grit removal is the protection of downstream mechanical equipment from excessive abrasion and wear and to prevent the deposition of grit in subsequent conduits and basins. It is particularly important in operations such as vegetable processing where the washing of root crops, for instance, lead to the generation of large amounts of mud. Grit chambers should be designed with a flow through velocity which will result in the removal of heavy inorganic material, while carrying putrescible organic solids through the chamber in suspension.

In their simplest form, grit chambers may be long narrow channels with a horizontal velocity of approximately 0.3 m/s (1 ft/s). Grit is usually removed from these chambers by either a continuous bucket and chain, or a screw conveyor. In the somewhat more sophisticated aerated grit chamber, a spiral flow is induced by means of air diffusers. This helical motion causes grit to accumulate in a hopper along one side of the chamber beneath the air diffusers. The size of particles removed is governed by the velocity of roll, which in turn can be controlled by the rate of air flow. Detention times of approximately three minutes are generally used with this type of chamber.

Secondary clarification for the removal of biological solids from the treated wastewater was discussed in Section 3 in conjunction with the fundamentals of biological treatment. Primary clarification employs the same principles of sedimentation and virtually identical equipment for the removal of solids from raw wastewater. This may be desirable in cases where high concentrations of organic solids in the raw waste would otherwise result in excessively high loadings on the biological treatment process. Primary clarifiers should also be equipped with skimming mechanisms for the removal of floating scum and grease. The overflow rate used in sizing primary sedimantion tanks will depend upon the settling velocity of the solids in the waste, the desired percentage removal, and the variability of the wastewater flow rate. In cases where flow equalization is not provided, relatively low overflow rates must be used when sizing primary clarifiers on the basis of average daily flow, to ensure satisfactory performance during periods of peak flow. For food processing wastewaters, overflow rates of 20 to 40 $m^3/m^2/d$ (400 to 800 $Igpd/ft^2$) are commonly used in sizing primary clarifiers.

Because of the numerous problems associated with handling and treating grease-laden wastes, it is usually advisable to provide grease traps for skimming this material from such processing streams. Small traps may be provided in individual plant sewers which are most prone to grease problems, or in the combined skimming tanks with 10 to 30 minutes detention time. They are designed with a submerged outlet to enable the separated liquid fraction to be drawn off, leaving the floating grease behind. The grease can be removed either mechanically or manually. In either case the trap should be cleaned frequently and regularly to ensure optimum performance.

5.5 Flotation

Flotation is commonly used in the food processing industry for the removal of suspended solids and other materials such as oil and grease, which are not readily removed by conventional sedimentation.

While a number of different flotation processes exist, the principle of all these processes is similar. In flotation, tiny gaseous bubbles are generated which attach themselves to suspended material in the wastewater, inducing it to float. The solids are then removed from the surface of the unit by continuous skimming. Most differences between flotation processes are attributable to the method used to generate the gas bubbles.

In dissolved air flotation, the wastewater stream, or some fraction of it, is saturated with air at high pressure. When the wastewater enters the flotation tank, the pressure is reduced to atmospheric, thereby reducing the solubility of the gas in water and resulting in the formation of bubbles. In vacuum flotation, a similar principle is employed. A partial vacuum is applied to the flotation unit, thus creating fine bubbles in the wastewater due to the reduction in gas solubility. In dispersed air flotation, compressed air is introduced to the wastewater and broken into small bubbles by a diffuser and/or rotating turbine. Finally, the electro-flotation process generates hydrogen and oxygen bubbles through electrolysis of the wastewater. An electric current is passed through the wastewater causing the formation of extremely small bubbles at the electrodes.

Flotation has been used for the removal of both suspended solids and grease. The process has been used extensively for the latter application as a pretreatment step in the food processing industry.

Flotation has a number of advantages over sedimentation for the removal of suspended solids. It has lower space requirements, yields higher solids concentrations than can normally be attained with settled sludge, and is capable of removing both settleable and non-settleable solids. On the other hand, flotation involves higher operating and maintenance costs and is not generally capable of achieving total suspended solids removals comparable to those attainable by sedimentation.

5.6 Disinfection

As discussed in Section 2, the presence of pathogenic bacteria in effluents from some sectors of the food processing industry, particularly meat, poultry and fish processing, may necessitate disinfection of the wastewater prior to discharge. Some alternative methods of disinfection include chlorination, ozonation, and ultraviolet radiation. Although the latter two are beginning to be used more frequently, chlorination is still by far the most common method of disinfection, and is the only method discussed here.

In small treatment plants, sodium or calcium hypochlorite are generally used for wastewater disinfection. The limitations of gas chlorination equipment to handle small flows and concerns both safely and simply, favour the use of the hypochlorite compounds in small plants. The hypochlorite compounds must be prepared by mixture with water. A diaphragm-type pump is then frequently used to introduce the prepared solution into the wastewater stream.

In larger plants, gas chlorination usually proves more economical. Chlorine gas is safely added to the wastewater by means of a vacuum-feed ejector. This device creates a vacuum to draw the chlorine into the wastewater stream rather than utilizing pressurized injection. This reduces the possiblity of leakage of this highly toxic gas.

Since the efficiency of the disinfection process is a function of both the concentration of disinfectant and its contact time with the wastewater, these two parameters are important in the design and operation of a chlorination system. The governing regulatory agency usually specifies the required contact time. Detention periods of 15 to 30 minutes are most commonly provided in chlorine contact chambers. Other important design features that should be incorporated in these chambers include provision for chlorine addition and mixing, avoidance of short circuiting, and maintenance of sufficient velocity to prevent deposition of solids.

The rate of chlorine addition should be controlled to ensure the presence of a free chlorine residual concentration in the contact chamber effluent. Since suspended solids, organic compounds, and ammonia in the wastewater all exert a chlorine demand above and beyond that required for disinfection, the presence of a free chlorine residual usually indicates sufficient chlorine has been added to achieve the desired disinfection result.

Again, the regulatory agency will frequently specify a residual concentration which must be maintained after the specified contact time.

While a residual chlorine concentration is required to assure the adequacy of disinfection, it has the undesirable side effect of creating a toxic effluent. For this reason, it may be necessary to either dechlorinate the effluent or choose an alternative more expensive method of disinfection which leaves no toxic residual (e.g., ozonation or ultraviolet radiation) in cases where discharge will be to an environmentally sensitive watercourse.

5.7 Sludge Treatment and Disposal

5.7.1 Introduction. In any biological treatment process, the removal of solids from the wastewater, and the conversion of soluble organics to cellular material results in the generation of sludge requiring treatment and/or disposal. In many instances sludge handling presents a problem nearly equal in magnitude to the intitial wastewater treatment problem.

The sludge is made up largely of water (usually greater than 95%), with the balance consisting of organic and inorganic solids. Sludge treatment processes are primarily concerned with stabilizing the organic portion of the solids and separating large amounts of water from the solid residues.

Sludge handling consists of five major processes: concentration (thickening), digestion (stabilization), conditioning, dewatering, and disposal. A wastewater treatment plant may employ any or all of these processes in handling its sludge as illustrated in Figure 30.

5.7.2 Sludge Concentration (Thickening). Sludge removed from primary clarifiers characteristically has solids concentrations of 2.5 to 5.0 percent, while that waste from the biological treatment stage generally has a solids concentration of less than 1%. If this sludge is to be further treated or hauled away directly for disposal, significant savings in treatment and transportation costs can be realized by reducing the volume requiring handling.

Simple sedimentation, referred to as gravity thickening, can usually increase the solids content of primary sludge to a concentration of 8-10%. Waste activated sludge can typically be thickened to a concentration of 2.5-4%.

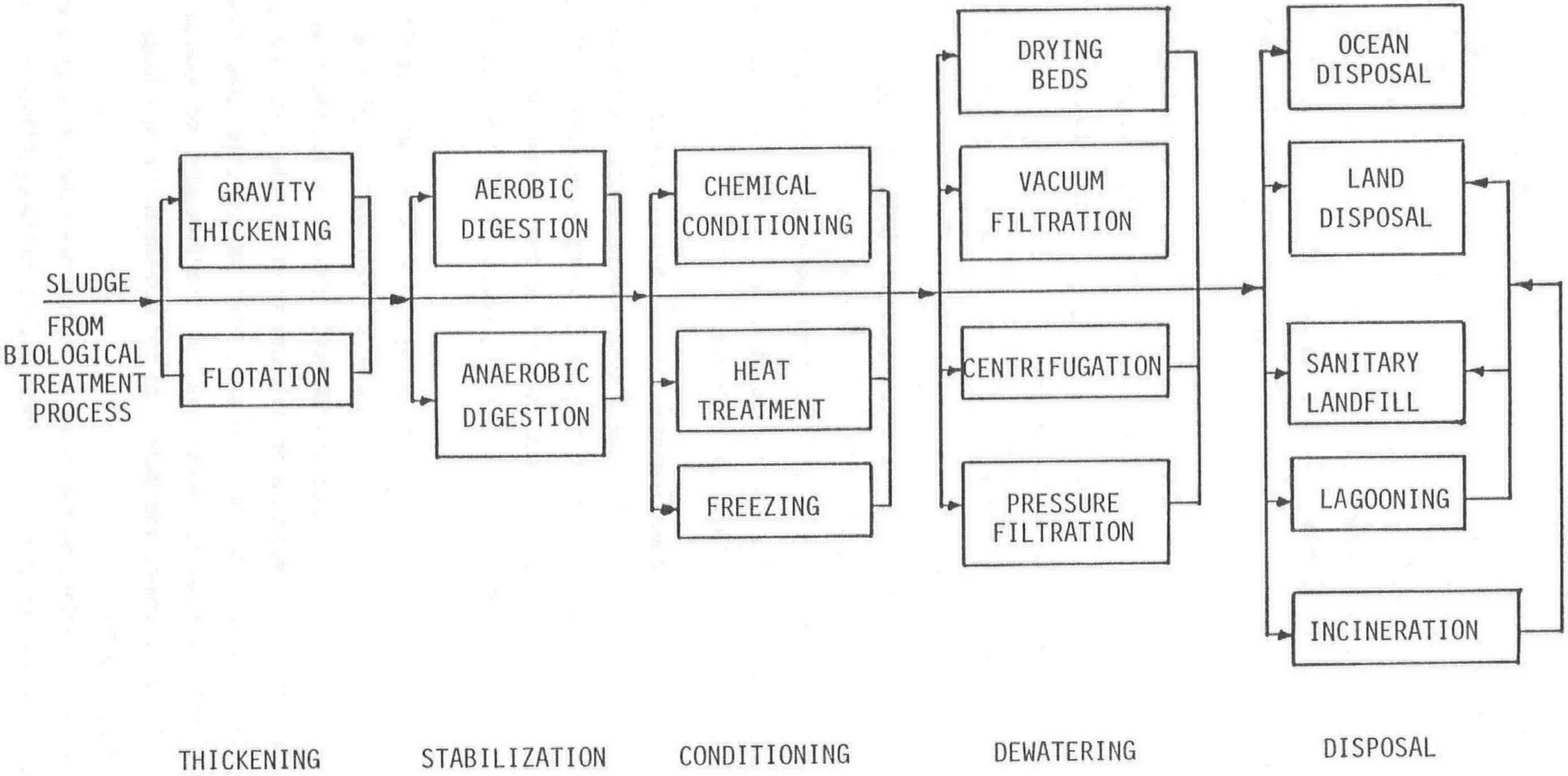

FIGURE 30 ALTERNATIVE SLUDGE TREATMENT AND DISPOSAL METHODS

Sludge thickeners are essentially identical to conventional sedimentation tanks or clarifiers and similar design principles apply. Typical surface-loading rates are 24 to 54 $m^3/m^2/d$ (480-1100 $Igpd/ft^2$). The overflow from the thickener is returned to the head of the treatment facility, with the underflow (sludge) being passed on to subsequent treatment steps or disposed of directly.

Primary and secondary sludges may be either combined and thickened in one unit, or concentrated separately. Separate sludge concentration has two distinct advantages:

1) In activated sludge plants, it enables excess sludge to be wasted by direct removal and thickening of the aeration-tank mixed liquor rather than by wasting the return activated sludge. This improves control of the sludge age and MLSS concentration.
2) Higher solids concentrations can be achieved with separate thickening than combined primary and secondary sludges.

Low temperatures and anaerobic conditions both interfere with sludge thickening and limit the amount of consolidation which can occur.

Flotation thickeners have also been used, primarily with waste activated sludge. Solids concentrations in the sludge of approximately 4% have been achieved at solids loadings of 24 to 97 $g/m^2/d$ (5-20 $lb/ft^2/d$).

5.7.3 Sludge Digestion (Stabilization). Raw sludge, wasted from biological treatment processes, contains high concentrations of putrescible, odorous, organic matter, which if disposed of directly will decompose creating offensive conditions. Thus, it is usually desirable to reduce the organic content of the sludge, or stabilize it, prior to disposal. This stabilization also results in the reduction of the total amount of sludge requiring ultimate disposal.

There are two processes commonly used for sludge stabilization; anaerobic digestion and aerobic digestion. The principles of anaerobic digestion have been discussed in Section 4.6, in conjunction with other anaerobic processes. Although widely used for the stabilization of municipal wastewater treatment plant sludges, the food processing industry has had little experience with anaerobic sludge digestion. Anaerobic lagoons have, however, been used quite successfully by the industry for sludge treatment and disposal in rural areas, where the potential for development of odours does not pose a severe operating problem.

Aerobic digestion, on the other hand, has been used to a greater extent by the industry. The process is based on the principle that microorganisms, in the absence of an external food source, enter the endogenous part of their life cycle and are forced to consume their own cell tissue. The result is a decrease in the microbial population or sludge mass. In the process, approximately 70 to 80% of the organic solids can be converted to carbon dioxide and water, with the remaining fraction being non-biodegradable. Sludge drawn from the aerobic sludge digestion process is low in organics and contains mainly inert materials that can be disposed of with little difficulty.

Aerobic sludge digestion can be used to treat sludges generated from plants employing conventional and modified activated sludge processes, trickling filters and rotating biological contactors. Since the extended aeration and oxidation ditch processes are similar to aerobic digestion, in that they too operate in the endogenous growth phase, sludges from these two processes usually have achieved a high degree of stabilization already, due to the long aeration time employed in these processes. For this reason, further treatment of these sludges is generally not required and they can be disposed of directly.

Reactors used for aerobic digestion of sludges are basically the same as the aeration tanks used in the suspended growth systems. They are either circular or rectangular tanks and are equipped with aeration equipment to provide oxygen and agitation in the process.

Operating and design criteria commonly used for aerobic sludge digestion are outlined below:

Solids loading: 1.6 - 3.2 $kg/m^3/d$ (0.1 - 0.2 $lb/ft^3/d$)
Detention time: 10 - 20 days
Dissolved oxygen concentration in liquid: 1 - 2 mg/L
Air requirements: 20 - 45 $L/min/m^3$ (20 - 45 $cfm/1000\ ft^3$)

Volatile solids in the sludge are generally reduced to approximately 40% of their original concentration at a detention time of 10 to 12 days. An increase in the detention time will result in a further reduction of volatile solids, however, the rate of removal decreases significantly thereafter. Depending on the operating temperature and sludge characteristics, the reduction in volatile solids will range between 40 to 70% in a well-designed and operated aerobic digester. The digested sludge is odourless and biologically stable. It can be dewatered easily and disposed of on land for agricultural use.

Compared to the anaerobic sludge digestion process, the operation and maintenance of the aerobic digester is much simpler. Routine monitoring requirements include regular measurement of the dissolved oxygen level in the aeration tank and daily shutdown of the aeration devices to permit the settling of sludge and withdrawal of the clear supernatant.

Temperature and pH play an important role in the operation of aerobic sludge digesters. Low temperatures will detrimentally affect the performance of the aerobic digester, particularly when it is operated at a short detention time. Under severe climatic conditions, heating or placing the reactors in the ground may be required to prevent excessive loss of heat. Depending on the buffering capacity of the system, the pH in the aerobic digester may drop to less than 6.0 due to nitrification. This may create an inhibitory effect on the biological activity in the system. Therefore, the pH should be checked periodically and adjusted if found to be too low.

Because of the high solids concentration, deposition of sludges tends to occur in the digestor if agitation is insufficient. This can create anaerobic conditions, resulting in the production of unpleasant odours. The problem can be corrected by increasing the capacity of the aeration equipment.

5.7.4 Sludge Conditioning. Stabilized sludges can be dewatered or dried to further reduce the volume of material requiring ultimate disposal. Several methods are available to condition the sludge, prior to drying, to improve its dewatering characteristics. The most commonly used sludge conditioning technique is the addition of chemical coagulants such as ferric chloride, lime, alum, or organic polymers. The coagulants are mixed with the sludge to develop a floc, prior to dewatering, which results in the release of more water from the sludge.

Another conditioning approach is to heat the sludge at high temperatures (80-110^{o}C) and pressure. Under these conditions, much like those of a pressure cooker, water bound up in the solids is released, improving the dewatering characteristics of the sludge. However, the process has the disadvantages of relatively complex operation and maintenance, and the creation of highly polluted cooking liquors that, when recycled to the treatment plant, impose a significant added treatment burden.

Freezing and irradiation have also been investigated as sludge conditioning methods. Laboratory investigations indicate that freezing of sludge is more effective than chemical conditioning in improving sludge filterability. Much remains to be done however, before this can become accepted as an effective method. Irradiation is not considered economically viable at the present time.

5.7.5 Sludge Dewatering. One of the most widely used methods for sludge dewatering in the food processing industry has been the sludge drying bed. These beds are especially applicable in small plants because of their simplicity of operation and maintenance. They are usually constructed of 15 to 30 cm of sand placed over 20 to 45 cm of gravel. Stabilized sludge is placed on the sand bed and allowed to stand until dried by a combination of drainage and evaporation. Drainage is collected in pipes beneath the gravel and returned to the wastewater plant for treatment.

Moisture content of the sludge is reduced to approximately 60% after 10 to 15 days under favourable drying conditions. Sludge removal is accomplished by manual shovelling into wheel barrows or trucks, or by a scraper or front-end loader.

In general, drying beds are likely to be the most economical method of sludge dewatering where land is inexpensive. Pre-conditioning of the sludge is generally not required. Operating requirements are relatively low and the dried sludge is easily handled.

Drying bed performance can be adversely affected by wet, snowy, or very cold weather. However, covered beds with green-house type enclosures have been used successfully to dewater sludge continuously throughout the year. Excessive amounts of oils, greases and fatty materials will also cause dewatering problems by clogging the sand pores and preventing good drainage from occurring.

Vacuum filtration is another popular method of sludge dewatering. A vacuum filter basically consists of a cylindrical drum covered with a filtering material or fabric, which rotates partially submerged in a vat of conditioned sludge. A vacuum is applied inside the drum to extract water, leaving the solids or "filter cake" on the filter medium. As the drum completes its rotational cycle, a blade scrapes the filter cake from the filter media. In some systems the filter fabric passes off the drum over small rollers to dislodge the cakes.

The performance of a vacuum filter is measured in terms of solids yield on a dry weight basis. The quality of the filter cake is measured by its moisture content. This normally varies between 70 and 80%.

Vacuum filters are generally used at relatively large treatment plants where space or other limitations preclude the use of drying beds. The process requires little space to operate and yields a relatively dry filter cake which is easily handled. However, successful operation of a vacuum filter usually necessitates chemical conditioning of the sludge and supervision by a trained operator.

In addition, the unit must be installed in an enclosure to provide protection from the weather. Operating costs for vacuum filtration are substantially higher than for drying beds.

Centrifugation is another mechanical process which has been used for sludge dewatering in the food processing industry. A centrifuge uses centrifugal force to accelerate the gravitational separation of sludge solids from the liquid. In a typical unit, sludge is pumped into a horizontal cylindrical bowl, rotating at 1600 - 2000 rpm. Polymers are usually added for sludge conditioning by injection into the centrifuge. The solids are spun to the outside of the bowl where they are scraped out by a screw conveyor. The liquid or "centrate" is returned to the wastewater plant for treatment. Solids concentrations in the cake vary from 15 to 40%, depending on the type of sludge.

The centrifuging process, comparable in cost with vacuum filtration, has the advantages of being entirely enclosed (which may reduce odours), requiring less space, and being able to handle some sludges that might otherwise plug vacuum filter media. The major problem in the operating of centrifuges has been the disposal of the centrate containing relatively high concentrations of non-settleable solids. This problem can be alleviated by increasing the residence time in the centrifuge, thereby increasing solids capture or by increasing particle size.

Particle size can be increased by coagulating the sludge, prior to centrifugation, with ferric chloride and lime or organic polymers. Solids capture may thus be increased from a range of 50 to 80% to a range of 80 to 95% of influent solids.

Pressure filtration is also an effective means of sludge dewatering that is finding increased use in North America. Sludge is dewatered by pumping it at high pressure through a filter medium attached to a series of plates. These plates are held together in a frame between one fixed end and one moving end. Sludge is pumped into the chambers between plates, so that the water passes through the filter medium and the solids are retained. Eventually, the pressure filter fills with solids. Sludge pumping is discontinued and the moving end of the press is pulled back so that the individual plates can be removed to dislodge the filter cake.

Pressure filtration offers the advantages of providing the dryest cake achieveable by mechanical dewatering methods, producing a very clear filtrate for return to the treatment plant, and frequently reducing chemical conditioning costs. It has the disadvantage of being a batch-type operation requiring operator attention at the end of each cycle and of requiring periodic washing of the filter medium. The costs for the dewatering step alone are often comparable to vacuum filtration and centrifugation, but the dryer cake produced (often 50% solids) can provide savings in total sludge-handling costs.

Other methods of sludge dewatering include mechanical or sonic vibration and heat drying. However, these methods have received very little attention by the food processing industry to date.

5.7.6 Sludge Disposal. Once stabilized and dewatered, a suitable means must be found for the ultimate disposal of sludges. Disposal on land and at sea have both been used successfully. However, since land disposal is utilized much more extensively and is the only feasible method available to the majority of Canadian food processing plants, ocean disposal is not considered further here.

The most common method for land disposal of sludges is by distribution on agricultural soil. Sludge which has been stabilized but not dewatered may be disposed of by pumping and spraying on nearby fields, while dewatered sludge is generally hauled to the point of application and ploughed into the soil after spreading. Sludges act as good soil conditioners and can produce a source of essential plant nutrients and trace minerals for agricultrual crops. Local restrictions may be placed on the type of crop that can be grown in soil to which waste sludge has been discharged. These restictions should be identified prior to embarking on a program of sludge disposal to agricultural land.

Poorly digested or raw sludge is not generally suitable for disposal in this manner. The odour problems associated with its decomposition, the oxygen demand which must be met by the soil, and the possible presence of high concentrations of pathogenic bacteria all dictate that the sludge be digested prior to distribution on agricultural land.

Well digested sludges, both wet and dewatered may also be disposed of by sanitary landfill. The sludge can be mixed with the refuse or other solid wastes before disposal. Sludges are deposited in a designated area, covered with soil and compacted to prevent fly infestation and to minimize odour problems.

Burial of undigested sludge is usually not feasible in most circumstances except where large well-isolated areas are available.

In selecting sites for sanitary landfill, consideration must be given to the nuisance and health hazards that may arise from the landfill operation, such as the possible pollution of ground water. The site should be well drained and provision should be made for retaining and/or treating this drainage, should contamination occur.

Lagooning of sludge is another popular disposal method because it is simple and economical if sufficient suitable land is available. In addition, the lagoon can perform the dual function of sludge stabilization and disposal. If raw sludge is deposited, the lagoon acts as an open digester and the organic solids undergo anaerobic and aerobic decomposition. This may give rise to objectionable odours and thus is usually only suitable for rural locations. If the lagoon is used as a storage basin for digested sludge, it is similar to a sludge drying bed and the odour problem is minimized. Sludge may be stored indefinitely in a lagoon or it may be removed periodically after drying. If sludge is to be dried and removed, the lagoon should be constructed with a depth of less than 2 m and at least two cells should be provided.

Lagoons should be located away from dwellings to minimize possible nuisance conditions and should be fenced for reasons of safety. Possible pollution of ground water should also be examined before lagooning of sludge is undertaken.

Incineration of sludge has been used in municipal applications, but has been given relatively little attention by the food processing industry to date. Although it is not a disposal method in the true sense, it can be used to convert the sludge into an inert ash, which can be disposed of easily.

6 CASE HISTORIES OF BIOLOGICAL TREATMENT IN THE FOOD PROCESSING INDUSTRY

6.1 Introduction

As discussed in Section 4, a wide variety of biological processes are available and have been employed by the food processing industry in an attempt to provide the necessary degree of wastewater treatment. While many treatment systems have been very successful, others have encountered severe operating problems and performance has not always met industry's and regulatory agencies' expectations. This has been particularly true in northern regions, where cold climates impose an additional hardship on the operation of biological systems.

In the preparation of this manual, site visits were conducted to a number of food processing plants in Canada and the northern United States. The objective of these visits was to obtain operating and performance data on biological wastewater treatment systems utilized by the industry, and to discuss the problems being encountered in their operation.

Plant visits were restricted to those facilities which were considered by local or federal regulatory agencies to exemplify best practicable technology for the industry.

This section of the manual presents case histories of twelve such plants, outlining their design criteria, loading rates, treatment efficiencies, operating experience and capital and operating costs. The case histories presented cover the sectors of the food processing industry outlined below:

a)	Meat and Poultry Processing:	2 poultry plants, 3 red meat plants,
b)	Dairy and Milk Processing:	3 plants,
c)	Fruit and Vegetable Processing:	1 potato plant, 1 fruit juice plant,
d)	Beverage Industry:	1 distillery,
e)	Fish Processing:	1 plant.

6.2 Cost Data

Difficulty was encountered in gathering reliable information on capital and operating costs for the majority of plants visited. In some cases the information simply did not exist. Where data on the capital cost of treatment facilities was provided, this has been updated using the Engineering News-Record (ENR) construction cost index.

The ENR construction cost index is commonly used to measure the effects of wage rate and materials price trends on construction costs. The index is published weekly in Engineering News-Record (30) magazine and can be used to update construction costs reported for capital projects, when the date at which these costs were incurred is unknown.

To estimate the present-day cost of constructing a facility similar to one installed some time previous, the following three pieces of information are required:

a) current ENR construction cost index,
b) original construction cost of facility and date of construction,
c) ENR costruction cost index corresponding to original construction date.

The updated cost of the facility is then simply determined by multiplying the original construction cost by the ratio of the current ENR construction cost index to the old or original index value.

For the purposes of this manual, all costs have been updated to November 1977 value, using an ENR construction cost index of 2660.

Where possible, actual operating costs reported by the plants have been presented. However, in the majority of cases, such data did not exist. As a result, operating costs for these plants have been estimated on the basis of the manpower and electrical requirements of the facility, as reported by the plant personnel. A standard value of $10/hour for manpower costs, and 2.5¢/kWh for electrical power has been used in calculating operating costs, and to facilitate comparisons between plants, the manpower cost is based on the average 1977 wage rate in the Canadian construction industry, while the energy cost represents the average electric power cost at municipal sewage treatment plants in Alberta in 1977.

The total annual costs presented include the annual operating cost plus an 11% annual amortization allowance on capital cost. The amortization allowance is based on a 10% interest rate and 25-year amortization period. Unit treatment costs (i.e., cost per m^3 of wastewater treated and cost per kilogram of BOD_5 removed) are based on the total annual cost and quantity of wastewater treated annually.

6.3 Meat and Poultry Plants

6.3.1 Plant A. Plant A is a poultry processing operation that slaughters approximately 18 000 birds/day on an eight-hr/day, five-day/week basis (annual production = 4.7×10^6 birds).

An extended aeration plant with integral clarifier, as shown in Figure 31, was installed in 1972 to treat an average wastewater flow of 455 m^3/d (100 000 Igpd). As illustrated in Figure 32, the wastewater treatment facilities include screening of the raw wastewater, aeration, clarification and physical-chemical treatment of the clarifier effluent.

The operating and design criteria for the extended aeration plant are summarized in Table 19.

Current wastewater flow rates average approximately 318 m^3/d (70 000 Igpd) and the process is generally achieving BOD_5 and suspended solids removals of greater than 95% and 90%, respectively. Clarifier effluent BOD_5 concentrations are less than 30 mg/L and suspended solids concentrations are less than 40 mg/L.

The wasting of biological sludge is practiced very infrequently. When carried out, sludge is discharged to an abandoned three-stage lagoon system on the plant property. Supernatant from the lagoon is returned to the aeration basin during periods of low flow.

Shortly after start-up, a problem of turbulence in the integral secondary clarifier was encountered. This was apparently solved by adding antirotational baffles to three sides of the aeration basin.

Freezing problems were also encountered with the integral clarifier. These were alleviated by enclosing the clarifier in a metal structure and blowing warm air over the liquid surface.

The wastewater treatment facility is operated and maintained on a part-shift basis by one man, who is also responsible for maintenance of the plant's boiler room.

Construction of the plant was completed in April 1972 at a cost of approximately $257 000 (including tertiary physical/chemical treatment). Using the ENR construction cost index for updating purposes, this corresponds to a November 1977 cost of approximately $400 000 as shown in Table 20.

Annual operating and maintenance costs for the extended aeration phase of the treatment process are estimated at approximately $18 600.

6.3.2 **Plant B.** Plant B is a poultry operation that slaughters and processes approximately 38 000 birds per eight-hour-day, five days per week (annual production = 10×10^6 birds). All blood, feathers, offal, and dead-on-arrival and contaminated birds are recovered and sent to an on-site rendering facility.

Grease is recovered from the process wastewater for rendering by means of air flotation prior to discharge to a wet-well. The wastewater from the wet-well is then

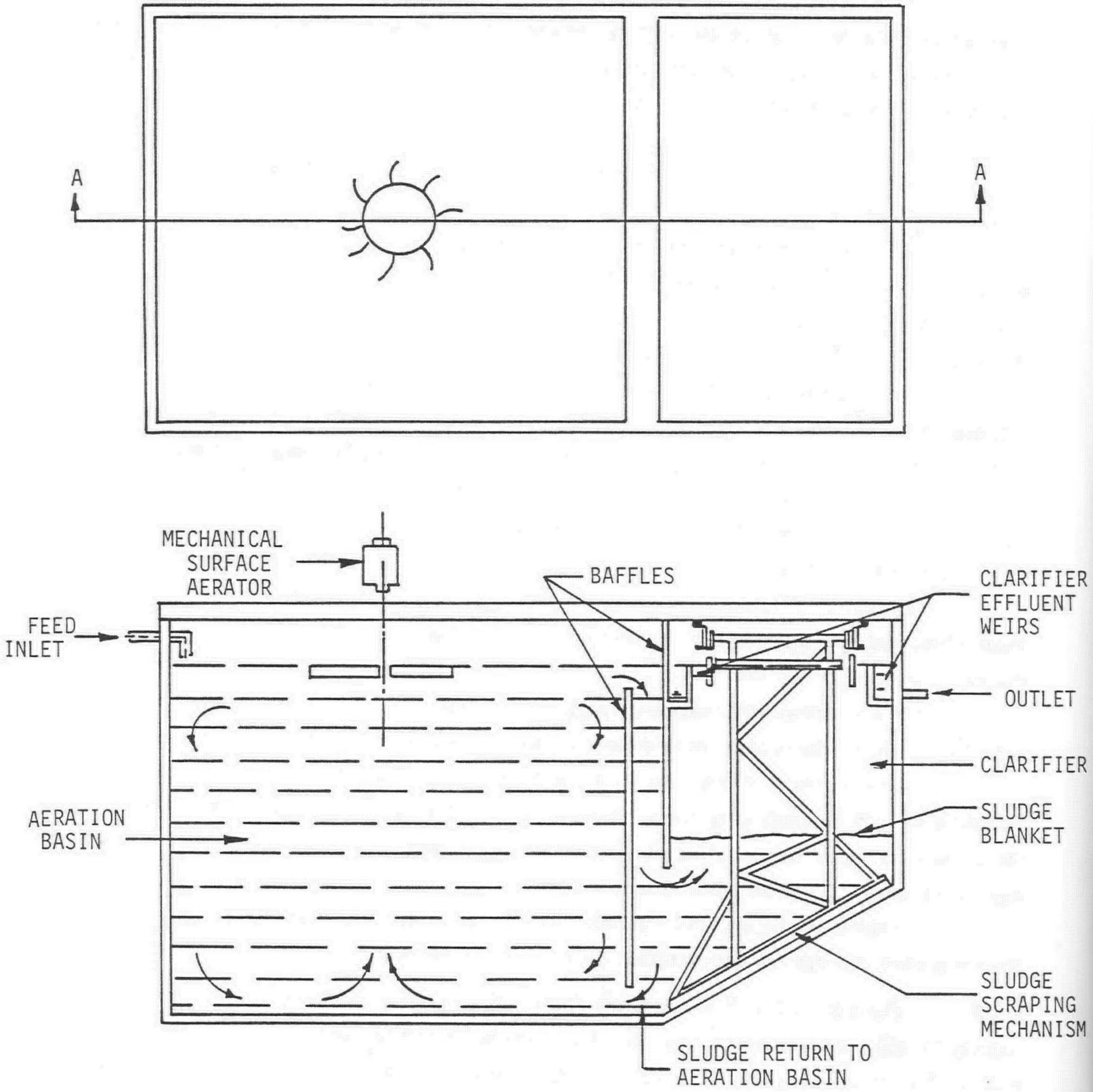

SECTION A-A

FIGURE 31 AERATION BASIN WITH INTEGRAL CLARIFIER

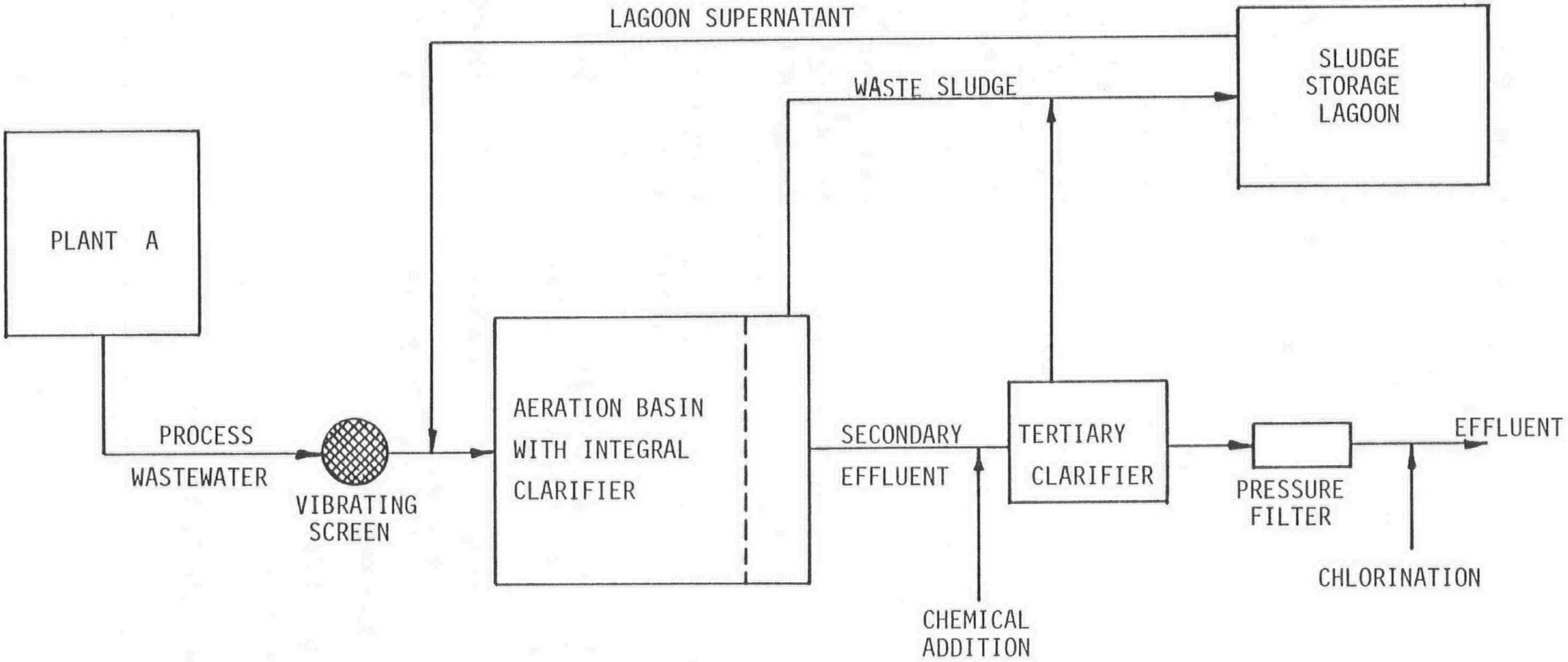

FIGURE 32 FLOWSHEET OF WASTEWATER TREATMENT PROCESS (PLANT A)

TABLE 19 OPERATING AND DESIGN CRITERIA FOR EXTENDED AERATION PROCESS (PLANT A)

Wastewater Characteristics		
Flow:	Average	318 m^3/d (70 000 Igpd) -5 days/week
	Design	455 m^3/d (100 000 Igpd) - 5 days/week
BOD_5:	Range	400 - 900 mg/L
	Average	600 mg/L
SS:	Range	250 - 500 mg/L
	Average	400 mg/L
Organic Loading Rate:		0.05 kg BOD_5/kg MLSS/d
Volumetric Loading Rate:		240 g BOD_5/m^3/d (15 lb $BOD_5/1000\ ft^3$/d)
MLSS Concentration:		4000 - 5000 mg/L
Detention Time:		3 days
Aeration Requirements:		19 kW - Mechanical Surface Aerator (14 kW/1000 m^3 of basin volume)
Secondary Clarifier Overflow Rate:		19.5 m^3/m^2/d (400 Igpd/ft^2)

TABLE 20 CAPITAL AND OPERATING COSTS FOR THE EXTENDED AERATION PROCESS (PLANT A)

Capital Cost (adjusted to 1977)	$400 000	
Annual Amortized Capital Cost @ 11%		$44 000
Operating Costs:		
Manpower: 1040 h/a @ $10/h	$10 400	
Electrical Power: 327 000 kWh/g x $0.025/kWh	$ 8 200	
Annual Operating Cost		$18 600
Total Annual Cost		$62 600
Cost per m^3 Treated		$0.75 ($3.40/1000 Igal)
Cost per kg BOD_5 Removed		$1.32 ($0.60/lb)

pumped to four vibrating screens. The screened wastewater flows through a splitter box to an extended aeration plant, which is in turn followed by a facultative lagoon, as shown in Figure 33.

The extended aeration plant consists of two earthern aeration basins operated in parallel. These cells are interconnected to permit series operation, if so desired. Overflow from the aeration cells enters a secondary clarifier and sludge removed from the clarifier bottom is recycled to the splitter box.

Clarifier effluent flows to a 1.6 hectare polishing pond and effluent from the pond is chlorinated prior to discharge to a small receiving stream.

The operating and design criteria for the extended aeration plant and lagoon are summarized in Table 21.

Current wastewater flow rates average approximately 1900 m^3/d (425 000 Igpd). Effluent from the secondary clarifier contains less than 30 mg/L BOD_5 and 75 mg/L suspended solids. This is further reduced to approximately 10 mg/L BOD_5 and 15 mg/L suspended solids in the polishing pond. Overall BOD_5 and suspended solids removals are 98% and 97%, respectively.

Some problems have been encountered with the loss of biological solids from the secondary clarifier. This has been attributed to sludge bulking, and to flow surges which result in increased overflow rates in the clarifier. Chlorination of return sludge to control filamentous organism growth and reduce bulking has been conducted on an experimental basis but results were inconclusive. It is believed that flow equalization would help alleviate the problem, but equipment and facilities are not available to test this.

The presence of high concentrations of algae in the polishing lagoon in summer months impart a green colour to the final effluent. For this reason, the polishing pond has been bypassed for short periods during the summer to prevent the discharge of aesthetically unacceptable effluent.

Winter operation has resulted in some icing problems, particularly with the rotating skimmer arm of the secondary clarifier. This has necessitated removal of the arm in fall to facilitate winter operation. In addition, it has been found necessary to chip ice from the umbrella which forms around the two surface aerators.

Sludge wasting has not been necessary for the past two years, however when carried out, the sludge is trucked to a landfill site. The wastewater treatment plant is operated by one man on a full-time basis.

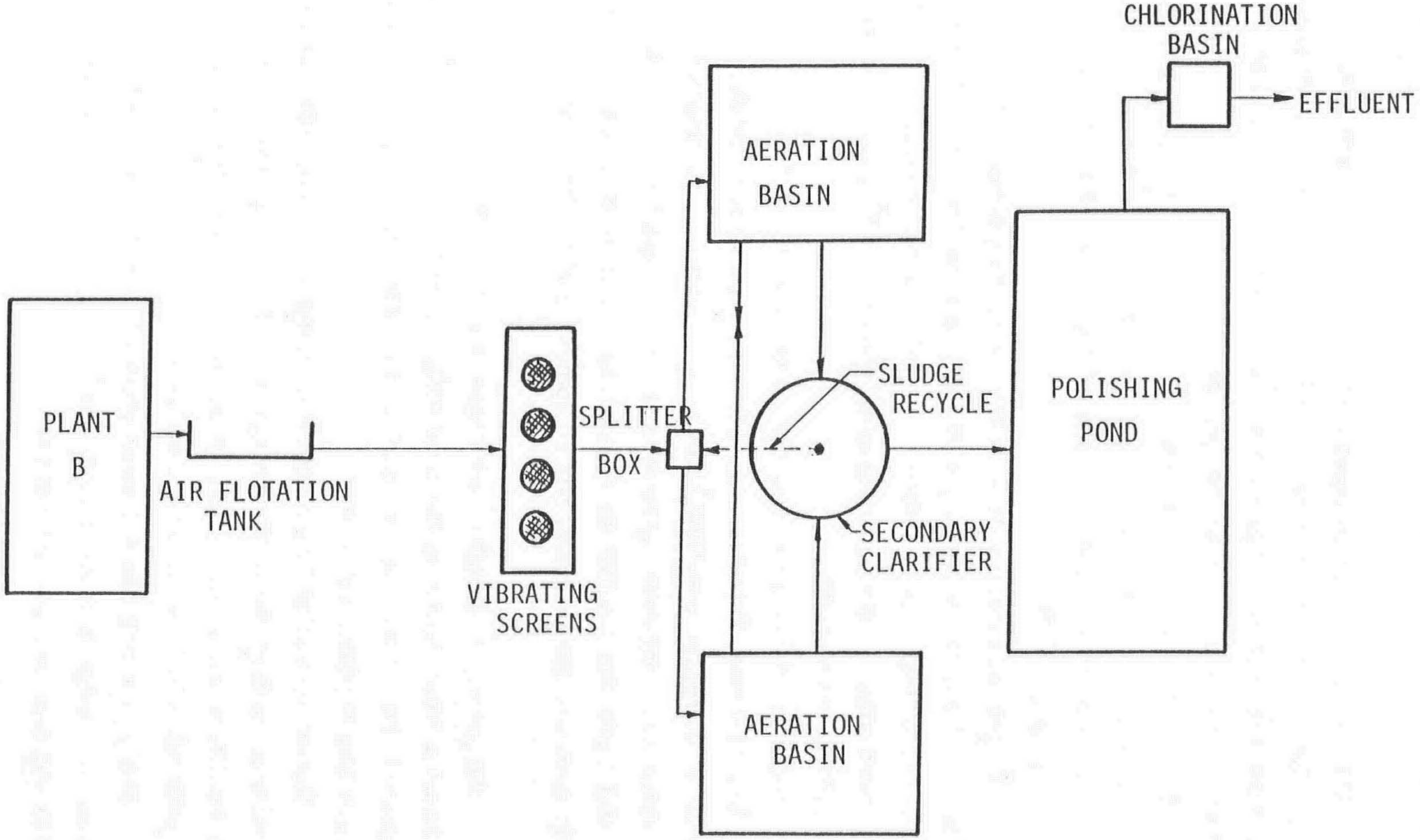

FIGURE 33 FLOWSHEET OF WASTEWATER TREATMENT PROCESS (PLANT B)

TABLE 21 OPERATING AND DESIGN CRITERIA FOR EXTENDED AERATION/ POLISHING LAGOON PROCESS (PLANT B)

Wastewater Characteristics:		
Flow:	Average:	1900 m^3/d (425 000 Igpd) - 5 days/week (Average flow during 8-hour processing period is approximately 38 L/sec) (Overnight and weekend flow is approximately 11 L/sec)
BOD_5:	Range	300 - 2000 mg/L
	Average	800 mg/L
SS:	Range	300 - 1000 mg/L
	Average	500 mg/L
Extended Aeration System:		
Organic Loading Rate:		0.02 - 0.05 kg BOD_5/kg MLSS/d
Volumetric Loading Rate:		160 - 320 g BOD_5/m^3/d (10 - 20 lb $BOD_5/1000\ ft^3$/d)
MLSS Concentration:		3800 - 5200 mg/L
Detention Time:		5.5 days
Aeration Requirements:		2 Mechanical Surface Aerators - 1 @ 56 kW and 1 @ 75 kW (12 kW/1000 m^3 of basin volume)
Secondary Clarifier:		Overflow Rate - 19.5 m^3/m^2/d (400 Igpd/ft^2) at 26 L/s (350 Igpm)
Polishing Lagoon:		
Organic Loading Rate:		2.2 g/m^2/d (20 lb BOD_5/acre/day)
Depth:		1.8 m (6 ft)

Capital and operating costs for the treatment plant are presented in Table 22. The plant was constructed in 1972 at a cost of approximately \$500 000 (excluding land), which corresponds to a November 1977 cost of approximately \$780 000, based on the ENR construction cost index. Annual operating and maintenance costs are estimated at \$50 800.

TABLE 22 CAPITAL AND OPERATING COSTS OF EXTENDED AERATION/ POLISHING LAGOON PROCESS (PLANT B)

Capital Cost (adjusted to 1977)	\$780 000	
Annual Amortized Capital Cost @ 11%		\$85 000
Operating costs:		
Manpower: 2080 h/a @ \$10/h		\$20 800
Electrical Power: 118 000 kWh/a x \$0.025/kWh		\$30 000
Annual Operating Cost		\$50 800
Total Annual Cost		\$135 000
Cost per m^3 treated		\$0.26 (\$1.20/1000 Igal)
Cost per kg BOD_5 removed		\$0.33 (\$0.15/lb)

6.3.3 **Plant C.** Plant C is a hog processing and rendering operation, slaughtering approximately 4000 hogs/day on an eight-hour/day, five-day/week basis (annual production = 1.0×10^6 hogs).

The wastewater treatment facility is comprised of an extended aeration process preceded by anaerobic lagoons. The raw wastewater is screened, and passed through an air flotation unit for removal of solids, fats, and grease. It then flows to a splitter box, where it can be diverted to either or both of two anaerobic lagoons operated in parallel (only one anaerobic lagoon is in use at present). Effluent from the lagoons enters a common aeration basin from which it is discharged to a secondary clarifier. Clarifier overflow is then chlorinated and either discharged directly to a nearby river, or stored in a holding pond if the effluent quality is unacceptable. Sludge from the secondary clarifier is returned to the aeration tank to maintain an MLSS concentration of approximately 5000 mg/L. Excess sludge is wasted to the anaerobic lagoons for digestion, thereby eliminating any sludge handling problems.

A flow diagram of the treatment process is illustrated in Figure 34. Operating and design criteria for the treatment plant are summarized in Table 23.

Winter wastewater temperatures have necessitated construction of a prefabricated building over the final clarifier to reduce icing problems. Mechanical failure of the aerator vanes, due to ice buildup, has also been encountered.

The use of the holding pond for effluent polishing in cold weather has been found beneficial in maintaining a high quality effluent on a year-round basis.

The plant is maintained by a trained operator on a full-time (eight-hour-day, five-day-week) basis. The operator monitors influent and effluent quality, sludge settleability, MLSS concentration and dissolved oxygen on a daily or weekly basis, depending upon the stability of the process performance. Close monitoring of the process has revealed that significant power savings can be realized, without impairing treatment performance, by operating two aerators continously and two only 50% of the time.

Since its construction in 1975, the plant has been producing a final effluent with less than 30 mg/L BOD_5 and suspended solids. The anaerobic lagoon has achieved approximately 60% removal of BOD_5 and 50% of suspended solids. Overall treatment efficiency is approximately 98% for BOD_5 removal and 96% for suspended solids.

No data is available on the construction cost of the plant, but operating costs are estimated at approximately $49 000 annually as shown in Table 24.

6.3.4 **Plant D.** Plant D is a small slaughtering and meat packing facility. Beef, pork and lamb are processed at an average rate of approximately 9000 kg (20 000 lb) LWK/day on an eight-hour/day, five-day/week basis (annual production = 2.3×10^6 kg).

As shown in Figure 35, plant wastewater is collected in a small sump and pumped to a vibrating screen for separation of gross solids. From here it flows to an oxidation ditch, and finally to a secondary clarifier prior to discharge to a small creek. Sludge from the clarifier bottom may be either returned to the ditch or drawn off for discharge to drying beds.

Operating and design criteria for the oxidation ditch installation are presented in Table 25.

The wastewater flow through the treatment plant is generally between 14 and 29 m^3/d (3000 and 6500 Igpd), five days per week. With few exceptions, the process has

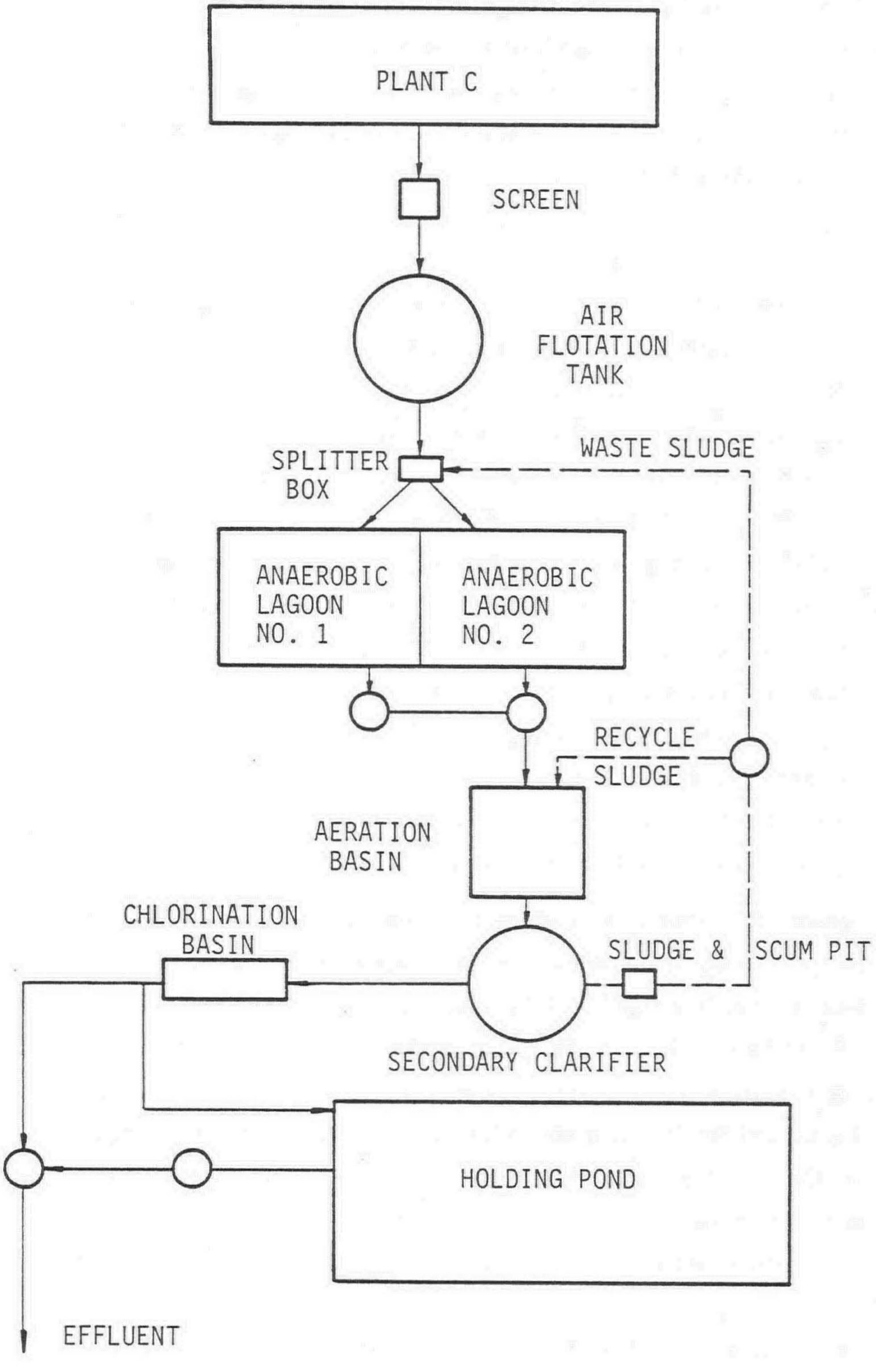

FIGURE 34 FLOWSHEET OF WASTEWATER TREATMENT PROCESS (PLANT C)

TABLE 23 OPERATING AND DESIGN CRITERIA FOR ANAEROBIC LAGOON/ EXTENDED AERATION PROCESS (PLANT C)

Wastewater Characteristics:		
Flow:	Average	1820 m^3/d (400 000 Igpd)
	Peak	3410 m^3/d (750 000 Igpd)
	Design	5000 m^3/d (1 000 000 Igpd)
BOD_5:	Range	700 - 2000 mg/L
	Average	1500 mg/L
SS:	Range	400 - 1200 mg/L
	Average	800 mg/L
Anaerobic Lagoon (under present average flow conditions, i.e., only one lagoon in operation)		
Organic Loading Rate:		270 g BOD_5/m^3/d (17 lb $BOD_5/1000\ ft^3$/d)
Depth:		4.6 m (15 ft)
Detention Time:		7.3 days
Extended Aeration (under present average flow conditions)		
Organic Loading Rate:		<0.04 kg BOD_5/kg MLSS/d
Volumetric Loading Rate:		<176 g BOD_5/m^3/d (11 lb $BOD_5/1000\ ft^3$/d)
MLSS Concentration:		5000 mg/L
Detention Time:		2.8 days
Aeration Requirements:		4 Mechanical Surface Aerators @ 37 kW each (20 kW/1000 m^3 of Basin Volume)
Secondary Clarifier: Overflow Rate:		9.8 m^3/m^2/d (200 Igpd/ft^2)
Polishing Pond (under present average flow conditions)		
Detention Time:		86 days

TABLE 24 OPERATING COST OF ANAEROBIC LAGOON/EXTENDED AERATION PROCESS (PLANT C)

Capital Cost	Not Available
Operating Costs:	
Manpower: 2080 h/a @ \$10/h	\$20 800
Electrical Power: 1.1 x 10^6 kWh/a x \$0.25/kWh	\$28 000
Annual Operating Cost	\$48 000

TABLE 25 DESIGN AND OPERATING CRITERIA FOR OXIDATION DITCH PROCESS (PLANT D)

Wastewater Characteristics		
Flow:	Average - 26 m^3/d (5700 Igpd) - 5 days/week (majority of daily flow occurs in 8-10 h period)	
BOD_5:	Range	500 - 7000 mg/L
	Average	2200 mg/L
SS:	Range	400 - 1400 mg/L
	Average	600 mg/L
Oxidation Ditch		
Organic Loading Rate:		0.12 kg BOD_5/kg MLSS/d
Volumetric Loading Rate:		368 g $BOD_5/m^3/d$ (23 lb $BOD_5/1000\ ft^3$/day)
MLSS Concentration:		3000 mg/L
Detention Time:		5.8 days
Aeration Requirements:		3.7 kW Cage Rotor (25 kW/1000 m^3 of basin volume)

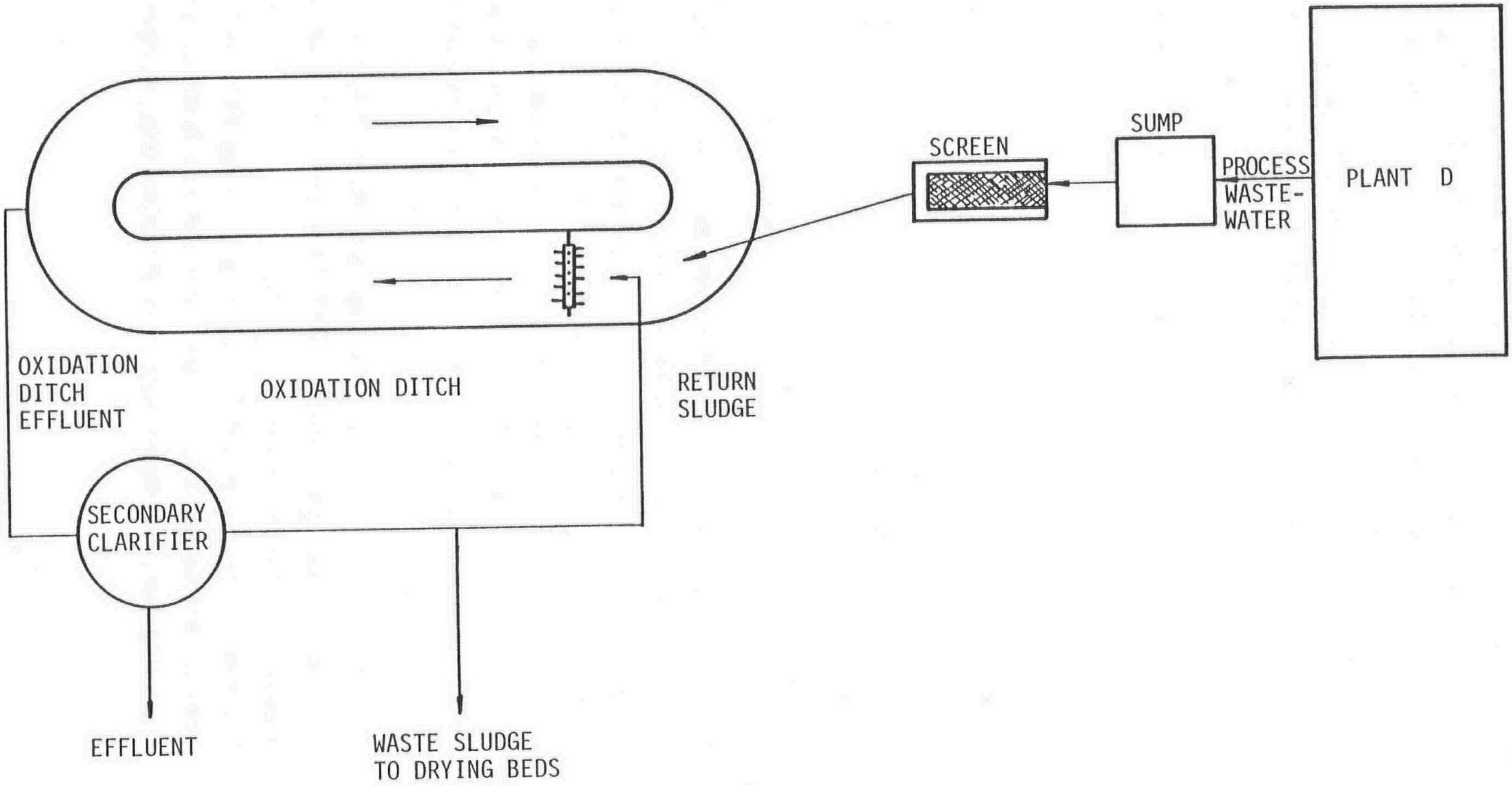

FIGURE 35 FLOWSHEET OF WASTEWATER TREATMENT PROCESS (PLANT D)

consistently been able to achieve effluent BOD_5 and suspended solids concentrations of less than 40 and 50 mg/L respectively, despite the concentrated and variable nature of the wastewater. This corresponds to removals of 98% and 90% for BOD_5 and suspended solids, respectively.

The oxidation ditch was constructed in 1963. No data are available on the captial cost of the plant, however, annual operating costs are estimated at less than \$3000, as calculated in Table 26.

TABLE 26 OPERATING COSTS FOR OXIDATION DITCH PROCESS (PLANT D)

Capital Cost	Not Available
Operating Costs:	
Manpower: 260 h/a @ \$10/h	\$2600
Electrical Power: 7500 kWh/a x \$0.025/kWh	\$ 190
Annual Operating Cost	\$2790

The operational requirements of the process have been found to be minimal. Return sludge from the secondary clarifier is wasted, as required, by discharging it directly to sludge drying beds located on the plant property. Sludge settleability, pH, and dissolved oxygen are measured on a regular basis.

Due to low alkalinity of the wastewater, sodium bicarbonate must be added to provide buffering capacity and to stabilize pH in the 6.5 to 7.0 range. Prior to the addition of sodium bicarbonate, the process was operating relatively unsuccessfully at a pH of approximately 4.7.

6.3.5 Plant E.

Plant E is a hog processing and rendering operation, slightly larger than Plant C, slaughtering approximately 5000 hogs per eight-hour day, five to six days/week (annual production = 1.4×10^6).

The wastewater treatment facility is a trickling filter process preceded by anaerobic lagoons. Pretreatment of wastes from the kill floor consists of screening followed by air flotation. Effluent from the flotation unit is combined with other processing and domestic wastewater, and sent to two anaerobic lagoons operated in parallel for biological treatment and flow equalizaiton. Lagoon effluent is then preaerated and pumped to two plastic media trickling filter towers operated in series. Secondary clarification in two parallel clarifiers and disinfection of effluent is then carried out prior to discharge to a nearby river. Sludge from the clarifiers is returned to the anaerboic lagoons for digestion. A flow diagram of the process is illustrated in Figure 36. Operating and design criteria for the treatment plant are summarized in Table 27.

Some problems have been encountered with reduced treatment efficiency and filter freezing during cold weather operation. The filters, originally open to the air, have been enclosed to help retain heat and alleviate this problem. Some clogging of the distributor arms and filter media has also been experienced; otherwise the trickling filters have operated with very few problems.

Experience has indicated that in-line flow metering would be an asset in enabling the hydraulic loading rates of each filter to be more closely monitored and controlled. Plant personnel plan to install such equipment in the near future.

A distinct odour of hydrogen sulphide was evident in the vicinity of the anaerobic lagoons, but this has reportedly not caused any complaints from a nearby residential area. Sludge removal from the anaerobic cells has only been required once to date.

The plant is maintained by a trained operator on a full-time basis and consistently produces a final effluent with less than 70 mg/L BOD_5 and 80 mg/L of suspended solids (greater than 97% removal of both parameters). The anaerobic lagoons are providing approximately 80% BOD_5 removal and 65% removal of suspended solids. A substantial amount of nitrification is achieved in the second trickling filter.

The treatment plant construction was completed in 1969 at a cost of \$500 000. As shown in Table 28, the estimated total capital cost of such a project in 1977 dollars is approximately \$1 100 000. The annual operating and maintenance cost of the facility is estimated at approximately \$40 000.

6.4 Dairies and Milk Products Plants

6.4.1 Plant F. Plant F is a dairy operation with a peak milk production of approximately 195 000 kg (430 000 lb) of raw milk per day. The principal products are butter, dried milk, and skim milk powder (annual production = approximately 3.0×10^6 kg butter and 4.5×10^6 kg skim milk powder). Plant production is highly seasonal. During the

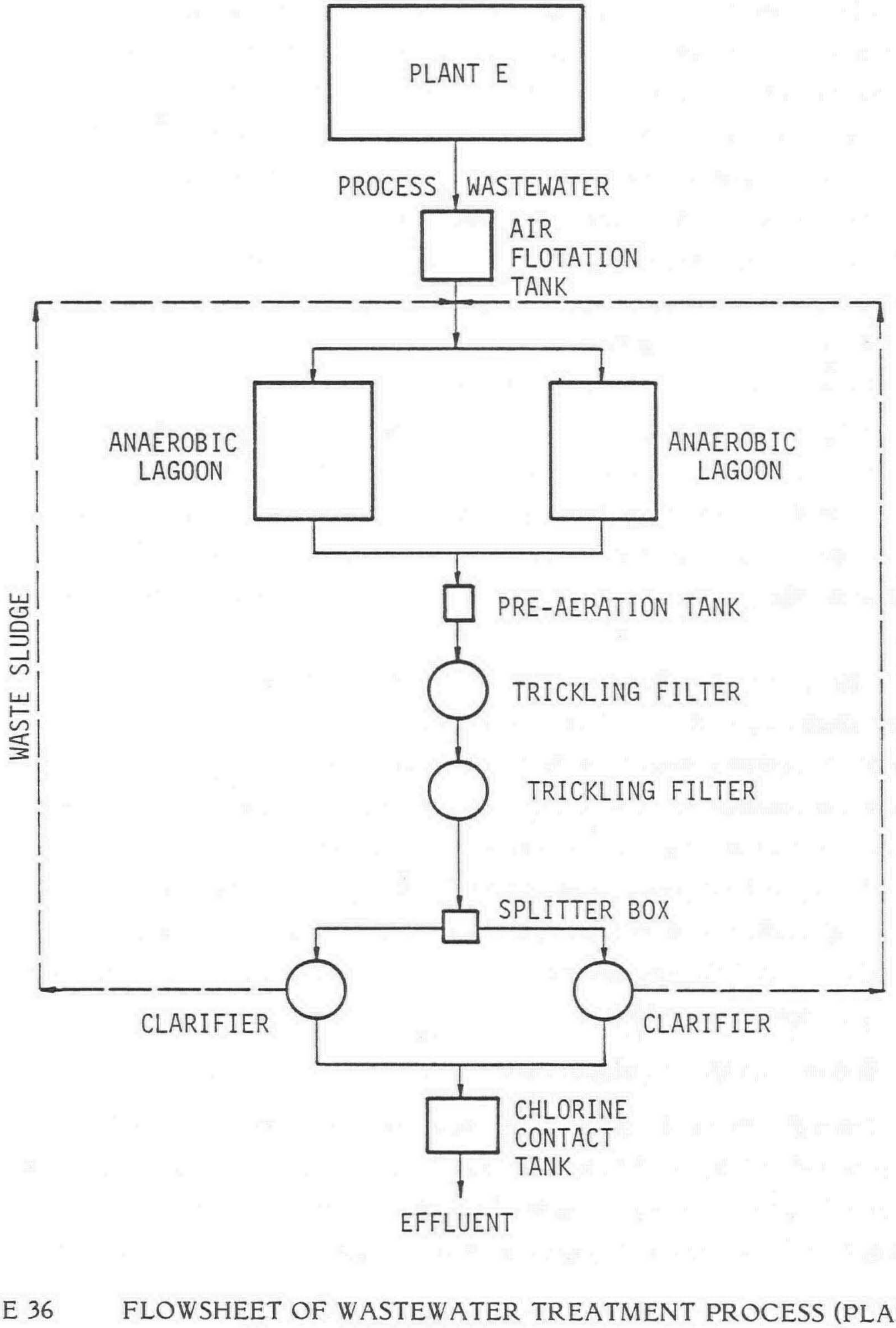

FIGURE 36 FLOWSHEET OF WASTEWATER TREATMENT PROCESS (PLANT E)

TABLE 27 OPERATING AND DESIGN CRITERIA FOR ANAEROBIC LAGOON/ TRICKLING FILTER PROCESS (PLANT E)

Wastewater Characteristics			
Flow:	Range	1820 - 3180 m^3/d (400 000 - 700 000 Igpd)	
	Average	2730 m^3/d (600 000 Igpd)	
BOD_5:	Range	2000 - 5000 mg/L	
	Average	3000 mg/L	
SS:	Range	2000 - 4000 mg/L	
	Average	3000 mg/L	
Anaerobic Lagoons			
Organic Loading:		320 g $BOD_5/m^3/d$ (20 lb $BOD_5/1000\ ft^3$/day)	
Depth:		4.3 m (14 ft)	
Detention Time:		9.7 days	
Trickling Filters		Filter No. 1	Filter No. 2
Dimensions		30 ft ϕ x 6.7 m deep each	
Organic Loading (including recirculation)			
(g $BOD_5/m^3/d$)		4200	690
(lb $BOD_5/1000\ ft^3/d$)		260	43
Hydraulic Loading (including recirculation)			
($m^3/m^2/d$)		50 - 60	25 - 30
(Igpd/ft^2)		1000 - 1200	500 - 600
Recirculation Ratio		1:1	N/A
Media		PVC	PVC
Secondary Clarifiers			
Overflow Rate:		28 $m^3/m^2/d$ (565 Igpd/ft^2)	

TABLE 28 PROCESS PERFORMANCE AND COST OF ANAEROBIC LAGOON/ EXTENDED PROCESS (PLANT E)

Capital Cost (adjusted to 1977)	$1 100 000	
Annual Amortized Capital Cost @ 11%		$121 000
Operating Cost:		
Manpower: 2080 h/a @ $10/h	$20 800	
Electrical Power: 149 000 kWh/a x $0.025/kWh	$ 3 700	
Maintenance Allowance	$15 000	
Annual Operating Cost		$39 500
Total Annual Cost		$160 500
Cost per m^3 Treated		$0.23 ($1.03/1000 Igal)
Cost per kg BOD_5 Removed		$0.077 ($0.035/lb)

peak production season (summer), the plant operates 24 hours per day, seven days/week. This drops of to a 16-hour/day, five-day/week production schedule as the availability of raw milk decreases.

An oxidation ditch process, as shown in Figure 37, is used to treat an average wastewater flow of 160 m^3/d (35 000 Igpd). Wastewater is collected in a wet-well and pumped to a 25 m^3 (5500 gallon) equalization tank. The waste flows from the bottom of the tank, at a rate proportional to static head of liquid in the tank, into an open channel to the oxidation ditch. Overflow from the ditch enters a secondary clarifier housed in a small building which also contains the sludge return pumps. Clarified effluent is discharged to a nearby river. Design and operating criteria are summarized in Table 29.

Sludge is wasted from the process on a daily basis in summer months by means of spray irrigation on 7.3 hectares of plant property. Sludge wasting occurs only intermittently in winter and is also disposed of by means of spray irrigation using winter spray heads.

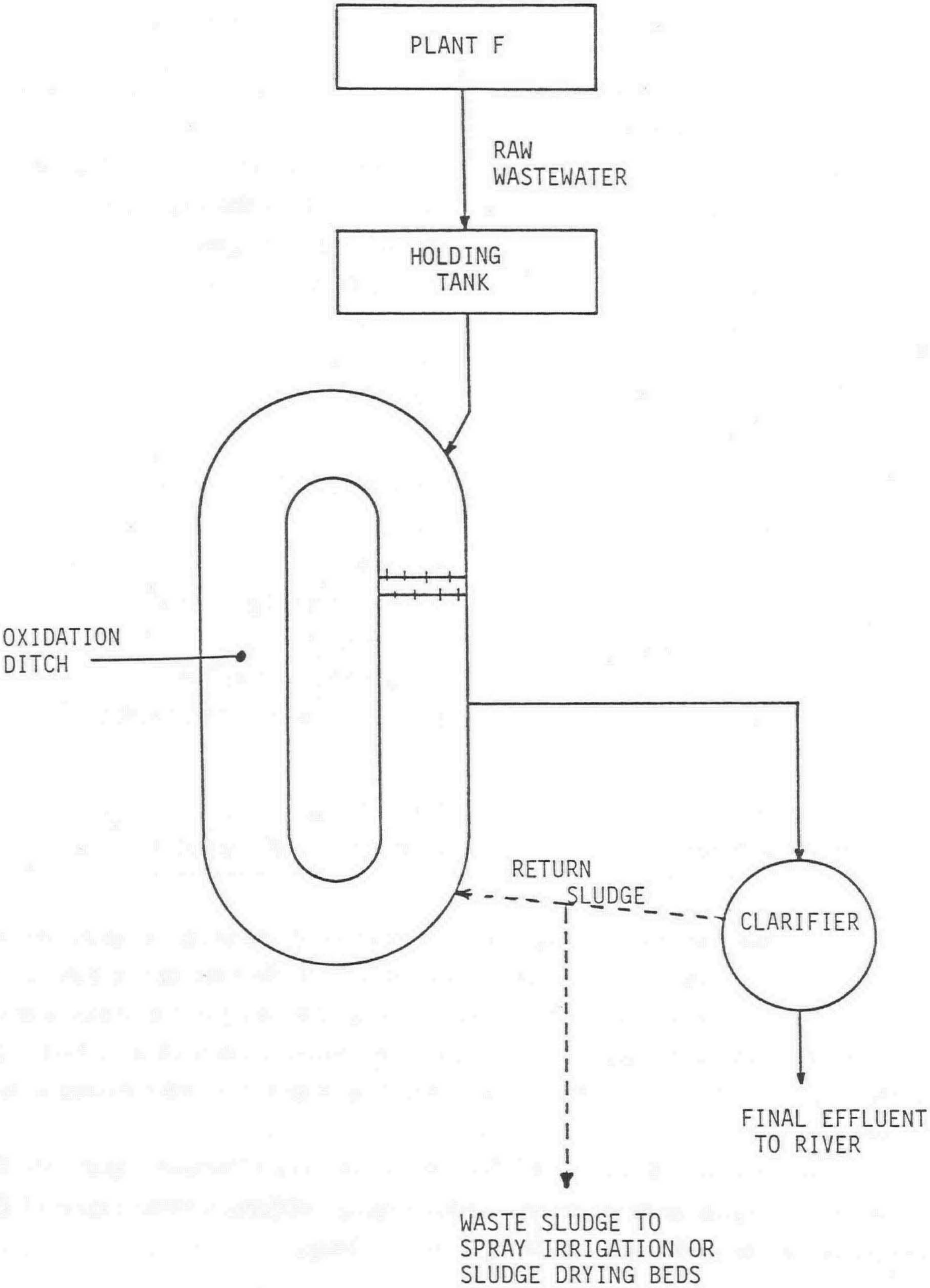

FIGURE 37 FLOWSHEET OF WASTEWATER TREATMENT PROCESS (PLANT F)

TABLE 29 OPERATING AND DESIGN CRITERIA FOR OXIDATION DITCH PROCESS (PLANT F)

Wastewater Characteristics		
Flow:	Summer	160 - 180 m^3/d (35 000 - 40 000 Igpd)
	Winter	45 - 55 m^3/d (10 000 - 12 000 Igpd)
Design Flow:		160 m^3/d (35 000 Igpd)
BOD_5:	Range	500 - 1900 mg/L
	Average	950 mg/L
SS:	Range	600 - 2500 mg/L
	Average	1240 mg/L
Oxidation Ditch		
Depth:		1.5 m (5 ft)
Detention Time:		3.1 days
MLSS Concentration:		4000 mg/L
Organic Loading:		0.076 kg BOD_5/kg MLSS/d
Volumetric Loading:		300 g $BOD_5/m^3/d$ (19 lb $BOD_5/1000\ ft^3/d$)
Aeration Requirements:		19 kW Cage Rotor (21 kW/1000 m^3)
Clarifier		
Diameter:		4.3 m (14 ft)
Overflow Rate:		11 $m^3/m^2/d$ (230 Igpd/ft^2)

The major problem encountered in operation of the plant has been the loss of solids from the secondary clarifier due to flow surges. While the holding tank provides some balancing of flow, this is insufficient to prevent the rising of the sludge blanket in the clarifer and subsequent loss of solids during extended periods of high flow. Some problems with ice formation on the aeration rotor have also been encountered in winter operations.

The oxidation ditch process has performed very effectively with 99% BOD_5 removal and 98% removal of suspended solids. Average effluent concentration of BOD_5 and suspended solids are 7 mg/L and 28 mg/L, respectively.

The plant operator spends approximately one hour per day maintaining the plant. This involves a daily sludge settleability test, scraping of the clarifier bottom and a weekly BOD_5 analysis.

The wastewater treatment plant was constructed in 1972 at a cost of approximately \$70 000. As shown in Table 30, the updated value of the plant is estimated at \$110 000, and annual operating costs at \$6 600.

TABLE 30 CAPITAL AND OPERATING COSTS FOR OXIDATION DITCH PROCESS (PLANT F)

Capital Cost (adjusted to 1977)	\$110 000	
Annual Amortized Cost @ 11%		\$12 100
Operating Costs:		
Manpower: 260 h/a x 10/h	\$ 2600	
Electrical Power: 160,000 kWh/a x \$0.025/kWh	\$ 4000	
Annual Operating Cost		\$ 6600
Total Annual Cost		\$18 700
Cost per m^3 Treated		\$0.32 (\$1.46/1000 Igal)
Cost per kg BOD_5 Removed		\$0.35 (\$0.16/lb)

6.4.2 Plant G. Plant G is a condensed milk operation that processes an average of approximately 159 000 kg (350 000 lb) of raw milk per day (annual production = 50×10^6 kg of raw milk). Plant production is highly seasonal, depending upon availability of raw milk, although production is generally carried out on an eight-hour/day, six-day/week basis.

As shown in Figure 38, the wastewater treatment process employed by Plant G, consists of a combined extended aeration, trickling filter process. The average daily flow of 160 m^3/d (35 000 Igpd) is passed through a grease trap and screen prior to reaching a preaeration basin. Wastewater from the preaeration cell is pumped at a constant rate of 38 L/s (500 Igpm) to a trickling filter with rock media. Underflow from the trickling filter

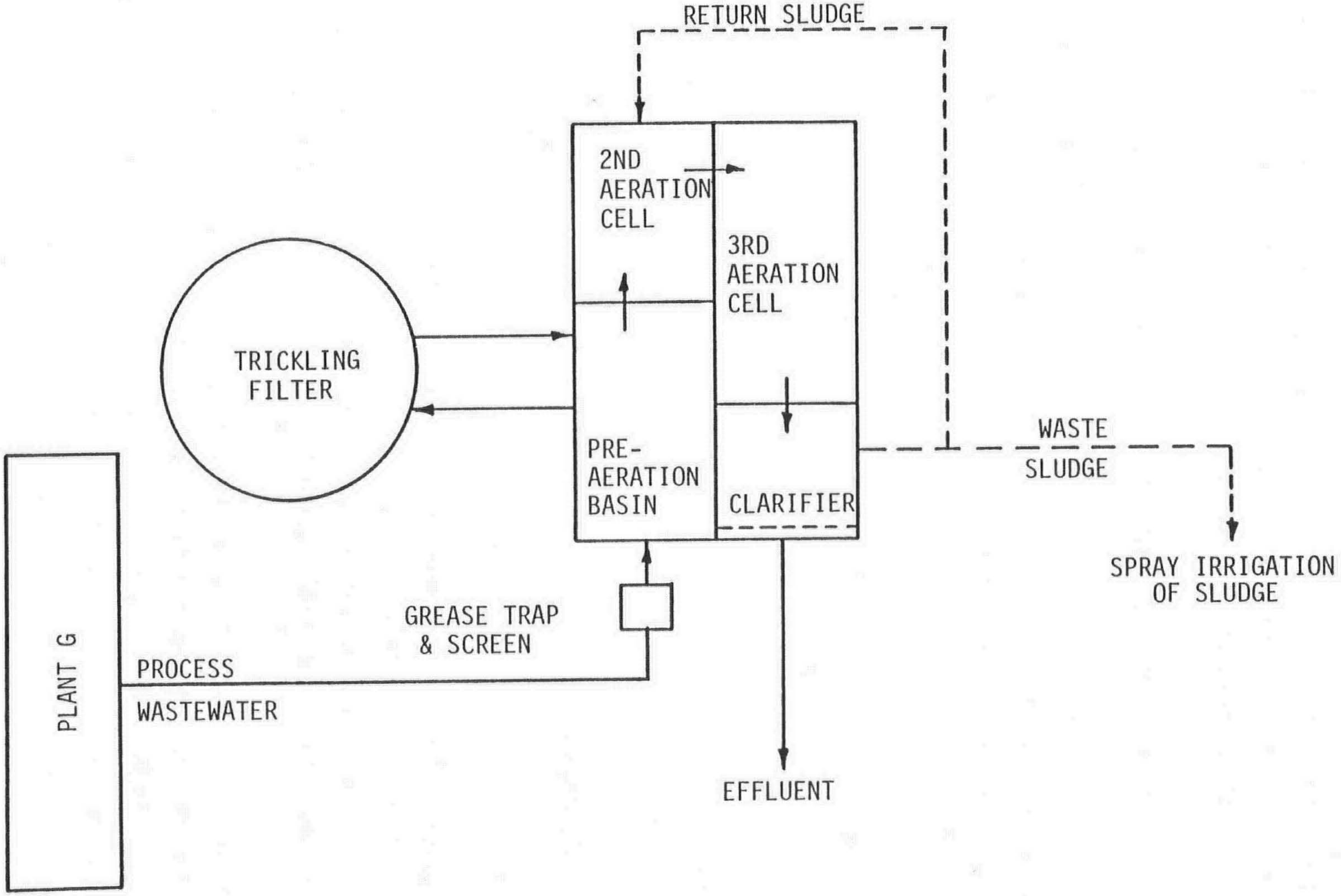

FIGURE 38 FLOWSHEET OF WASTEWATER TREATMENT PROCESS (PLANT G)

is returned to the preaeration basin and overflow from this cell enters a second aerated cell, which carries a much higher concentration of mixed liquor suspended solids. Effluent from this stage passes to a third aeration basin and finally to a rectangular clarifier prior to discharge to a municipal sewer.

Operating and design criteria for the plant are summarized in Table 31. Sludge removed from the clarifier bottom is returned to the second aeration basin. In summer months, approximately 6.8 m^3 (1500 Igal) of return sludge are wasted per week by spraying on plant property.

Problems which have been encountered with the trickling filter include ice buildup in winter months and some filter fly nuisance in summer. Many problems have occurred with clogging of the carborundum type air diffusers in the aeration basins. This has necessitated daily brushing and frequent removal of the diffusers to prevent excessive pressure build-up in the aeration piping.

Discharges of high concentrations of suspended solids have been another problem with the process. Since the majority of the total daily flow occurs in the last three hours of an eight-hour shift, during wash-up operations, a flow surge occurs. This results in increased overflow rates in the secondary clarifier and the resultant loss of solids.

Approximately one hour per day is spent in maintaining the plant. When operating well, an effluent BOD concentration of less than 25 gm/L and less than 100 mg/L of suspended solids is generally achieved.

An estimate of the capital cost of the wastewater treatment facility was not available, but annual operating costs are estimated at approximately $6000 as shown in Table 32.

6.4.3 **Plant H.** Plant H is a 24-hour/day, seven-day/week milk processing operation. The main products are cheese and butter, with dried whey being sold as a byproduct. The plant receives approximately 0.68×10^6 kg (1.5×10^6 lb) of raw milk and 23 000 kg (50 000 lb) of condensed whey per day plus 91 000 kg (200 000 lb) of cream per week.

The wastewater treatment facility consists of a seven-stage RBC unit followed by aerated lagoons. As shown in Figure 39, aqueous ammonia is added to the flow equalization/preaeration basin ahead of the RBC unit, due to a nitrogen deficiency in the wastewater. Intermediate clarification follows the first three stages of RBC treatment. Effluent from the intermediate clarifier is then further treated in an additional four RBC

TABLE 31 OPERATING AND DESIGN CRITERIA FOR EXTENDED AERATION/TRICKLING FILTER PROCESS (PLANT G)

Wastewater Characteristics		
Flow:	Range	114 - 295 m^3/d (25 000 - 65 000 Igpd)
	Average	160 m^3/d (35 000 Igpd)
BOD$_5$:	Range	300 - 2200 mg/L
	Average	1000 mg/L
SS:	Range	150-500 mg/L
	Average	300 mg/L
Trickling Filter		
Depth:		1.4 m (4.5 ft)
Diameter:		21.4 m (70 ft)
Organic Loading Rate:		320 g BOD$_5$/m^3/d (20 lb BOD$_5$/1000 ft^3/d)
Hydraulic Loading Rate:		0.44 m^3/m^2/d (9 Igpd/ft^2)
Media:		Rock
Extended Aeration Process		
1st Cell:		detention time - 18 hours
2nd Cell:		detention time - 15 hours
3rd Cell:		detention time - 24 hours
Overall Aeration Requirements		
Diffused Aeration		(41 kW/1000 m^3 of basin volume)
Secondary Clarifier		
Overflow Rate : 6.8 m^3/m^2/d (140 Igpd/ft^2)		

TABLE 32 OPERATING COSTS FOR THE EXTENDED AERATION/TRICKLING FILTER PROCESS (PLANT G)

Costs	
Capital Cost:	Not Available
Operating Costs:	
Manpower: 260 h/a x \$10/h	\$2600
Electrical Power: 131 400 kWh/a x \$0.024/kWh	\$3300
Annual Operating Cost	\$5900

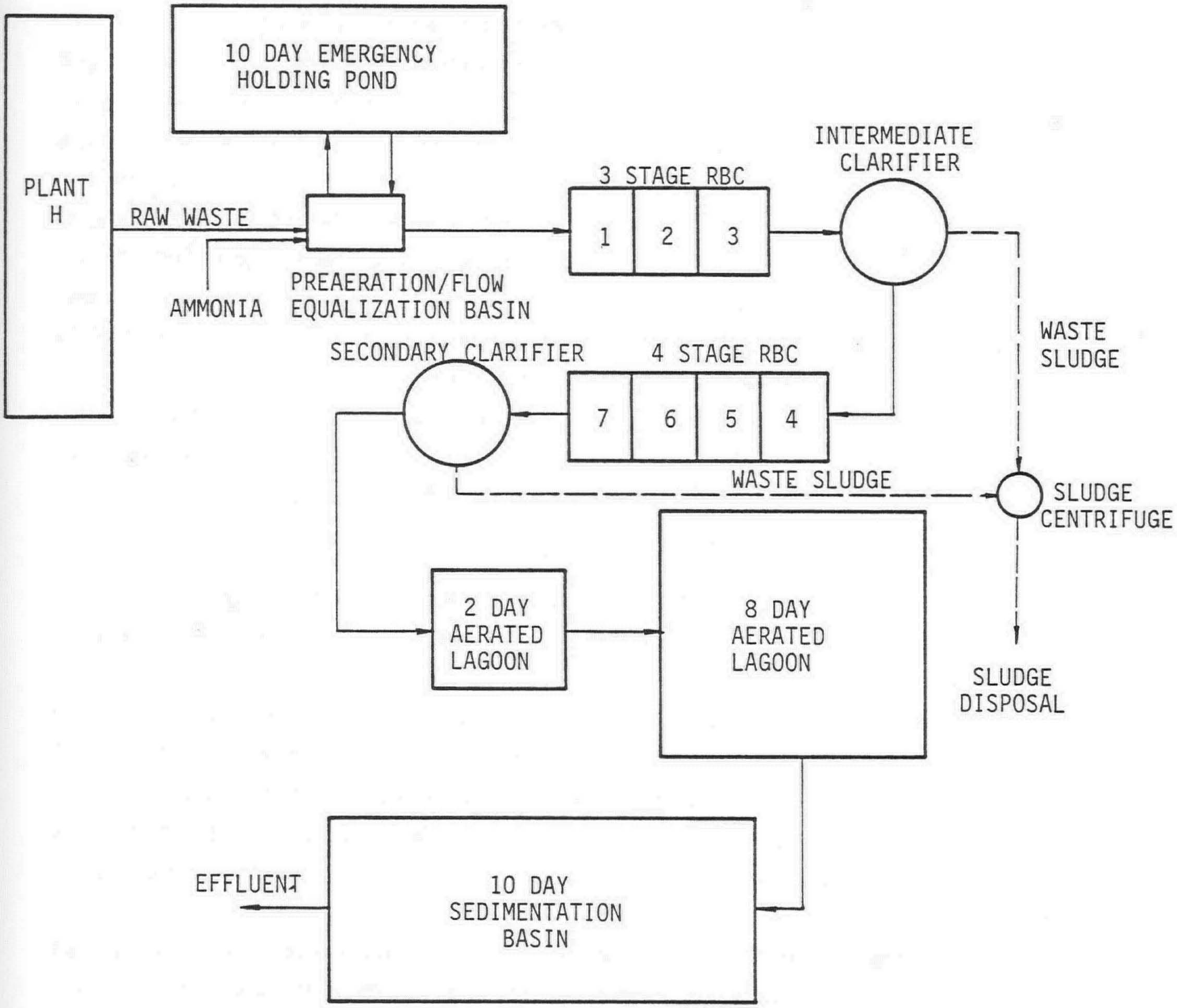

FIGURE 39 FLOWSHEET OF WASTEWATER TREATMENT PROCESS (PLANT H)

stages, and discharged to a secondary clarifier. Secondary clarifier effluent is subsequently passed through a two-cell aerated lagoon system, and a settling basin prior to discharge. The wastewater flow of 590 m^3/d (130 000 Igpd) is relatively consistent year-round. Operating and design criteria for the wastewater treatment process are summarized in Table 33. The plant is maintained by one operator on a full-time, eight-hour/day, five-day/week basis.

The RBC/aerated lagoon process has performed exceptionally well and demonstrated an ability to attain very high treatment efficiencies. The RBC system with secondary clarifier is achieving approximately 90% removal of BOD_5 and 86% suspended solids removal. Final effluent from the aerated lagoon system contains less than 25 mg/L of BOD_5 and suspended solids, for overall removals in excess of 99% for both parameters.

The major difficulty with the operation of this plant has been the handling of voluminous amounts of waste sludge produced by the RBC process. Sludge collected from the intermediate and secondary clarifiers is dewatered in a centrifuge and hauled away for speading on 65 hectares (160 acres) of pasture land. Approximately 9 m^3/day (2000 Igpd) of dewatered sludge must be disposed of in this fashion.

As shown in Table 34, the estimated present value of the plant is approximately $815 000. It was constructed in 1975 at a cost of $700 000. Operating costs are estimated at approximately $47 000 annually.

6.5 Fruit and Vegetable Processing Plants

6.5.1 Plant I. Plant I is a potato processing plant operating 24 hours/day, five to six days per week. It processes an average 0.68 million kilograms (1.5 million pounds) of potatoes per day (annual production = 195 x 10^6 kg of raw potatoes).

The average wastewater flow of 2800 m^3/d (625 000 Igpd) is treated by a high rate trickling filter (biofilter) process as illustrated in Figure 40. In-plant pretreatment processes consist of a mud pit for removal of field stones, dirt and sprouts from the fluming water, a grease trap for removal of free floating grease from the french fry operation, and scalping and vibrating screens for gross solids removal from the combined wastewater stream.

Screened wastewater is passed through a primary clarifier and then to two high rate plastic media trickling filters operated in series with interstage settling. Effluent from the second trickling filter flows to a secondary clarifier prior to discharge to a river. A fraction of the final effluent is also recirculated to the first trickling filter. Operating and design criteria for the plant are summarized in Table 35.

TABLE 33 OPERATING AND DESIGN CRITERIA FOR RBC/AERATED LAGOON PROCESS (PLANT H)

Wastewater Characteristics	
Flow:	590 m^3/d (130 000 Igpd) - little variance
BOD_5:	3400 mg/L
SS:	3200 mg/L
Preaeration/Flow Equalization Basin	
Volume:	455 m^3 (100 000 Igal)
Detention Time:	18 hours
First 3 RBC Stages	
Surface Area per stage:	16 700 m^2 (180 000 ft^2)
Organic Loading Rate:	40 g/m^2/d (8.2 lb BOD_5/1000 ft^2/day)
Hydraulic Loading Rate:	0.012 m^3/m^2/d (0.24 Igpd/ft^2)
Intermediate Clarifier	
Overflow Rate:	36 m^3/m^2/d (735 Igpd//ft^2)
Last 4 RBC Stages	
Surface Area per stage:	16 700 m^2 (180 000 ft^2)
Hydraulic Loading Rate:	0.0088 m^3/m^2/d (0.18 Igpd/ft^2)
Secondary Clarifier	
Overflow Rate:	36 m^3/m^2/d (735 Igpd/ft^2)
Aerated Lagoons	
First Cell:	Detention Time - 2 days Organic Loading - 320 g/m^3/d (20 lb BOD_5/1000 ft^3/day)
Second Cell:	Detention Time - 8 days

Aeration Requirements:

- Diffused air with 3 blowers @ 75 kW each to aerate preparation basin plus both aerated lagoon cells
- Only one blower in use at present
- Average overall aeration requirements = 12 kW/1000 m^3 (72 hp/MIG)

Final Settling Basin:	Detention Time - 10 days

TABLE 34 CAPITAL AND OPERATING COST DATA FOR THE RBC/AERATED LAGOON PROCESS (PLANT H)

Capital cost (adjusted to 1977)	\$815 000	
Annual Amortized Capital Cost @ 11%		\$89 700
Operating Costs:		
Manpower: 2080 h/a x \$10/h	\$21 000	
Electrical Power:		
980 000 kWh/a x \$0.025 kWh	\$24 500	
Chemicals:	\$ 1 400	
Annual Operating Cost		\$46 900
Total Annual Cost		\$136 600
Cost per m^3 Treated		\$0.63 (\$2.87/1000 Igal)
Cost per kg BOD_5 Removed		\$0.19 (\$0.085/lb)

Sludge removed from the primary clarifier is dewatered on a vacuum filter prior to being hauled some 18 km (11 miles) to a lagoon for final disposal. Secondary sludge is pumped directly to a dewatering and digestion lagoon located on the premises. Supernatant from this lagoon is returned to the trickling filters, with the dried sludge being removed by means of a front-end loader and disposed of on land.

A number of operating problems were encountered with the wastewater treatment facility shortly after placing it into operation in 1971, but these have been overcome. Grease and fibres in the wastewater caused a clogging problem with the spray nozzles on the biofilters necessitating their frequent cleaning. A modified distribution system has been installed to alleviate this problem.

Caustic spills in the plant have occasionally resulted in wastewater pH values in excess of 9.0. These have caused damage to the biological film on the media, which requires one to two days to recover.

While the pH of the raw wastewater entering the primary clarifier is near neutral, the primary sludge pH is usually in the range of 4.3 to 4.5 when removed. This is

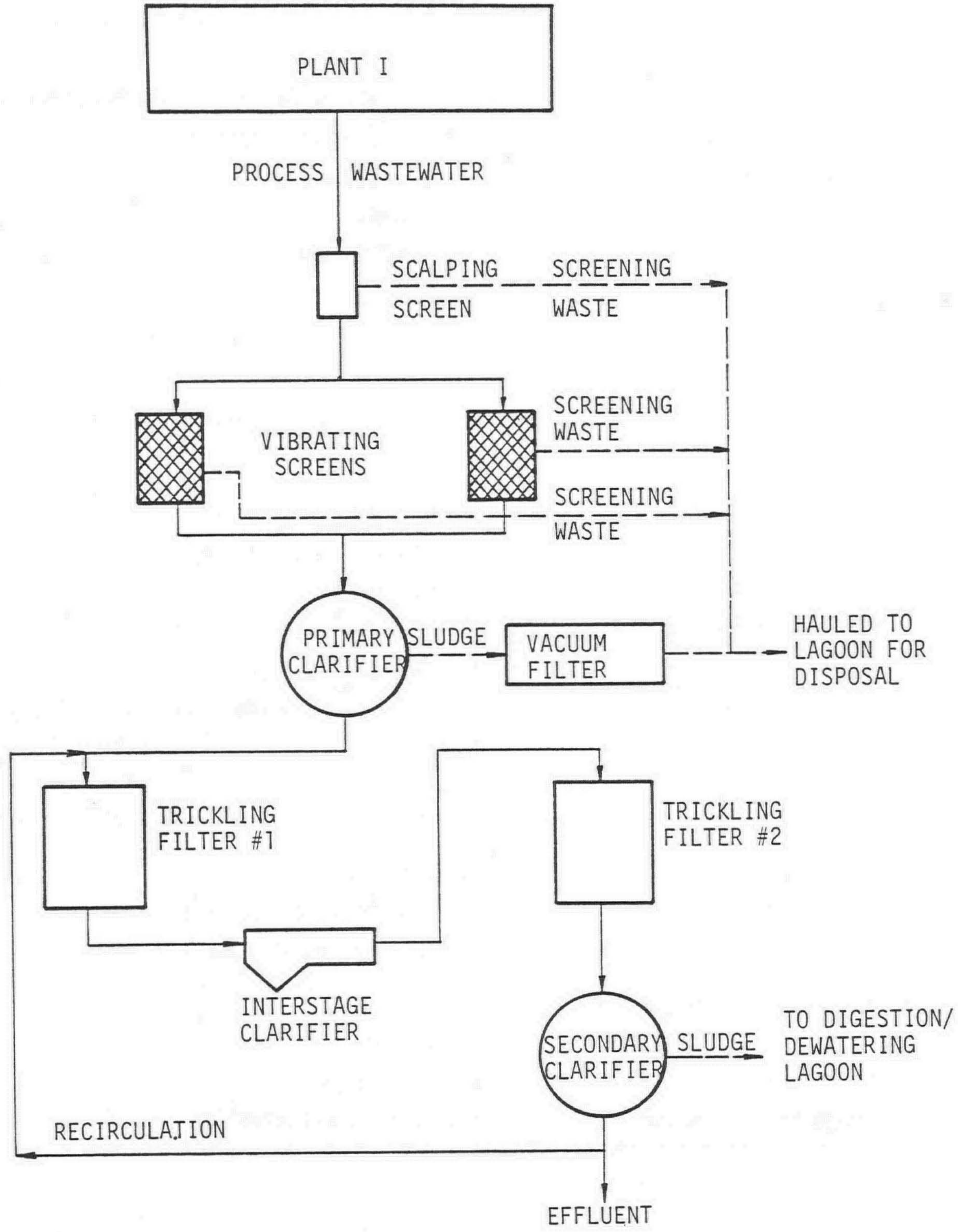

FIGURE 40 FLOWSHEET OF WASTEWATER TREATMENT PROCESS (PLANT I)

TABLE 35 OPERATING AND DESIGN CRITERIA FOR HIGH RATE TRICKLING FILTER PROCESS (PLANT I)

Wastewater Characteristics		
Flow:	Range	2640 - 3050 m^3/d (580 000 - 670 000 Igpd)
	Average	2800 m^3/d (625 000 Igpd)
BOD_5:	Range	1700 - 4800 mg/L
	Average	2500 mg/L
SS:	Range	900 - 4200 mg/L
	Average	2000 mg/L
Primary Clarifier		
Diameter:		20 m (65 ft)
Overflow Rate:		9.8 m^3/m^2/d (200 Igpd/ft^2)
Trickling Filters		
Dimensions:		12 m x 12 m x 6 m deep (40 ft x 40 ft x 20 ft deep) (each)
Media:		Plastic Flocor
Hydraulic Loading:		0.038 m^3/m^2/d (0.78 Igpd/ft^2) (including recirculation)
Organic Loading:		10 000 g/m^3/d (675 lb BOD_5/1000 ft^3/day) (first biofilter inlcuding recirculation)
Recirculation Ratio:		1.6:1
Secondary Clarifier		
Diameter:		17 m (55 ft)
Overflow Rate:		37 m^3/m^2/d (750 Igpd/ft^2) (including recirculation)
Sludge Digestion/Dewatering Lagoon		
Depth:		1.8 m (6 ft)
Design Storage:		100 - 300 days
Design Solids Loading:		107 kg/m^2/a (22 lb/ft^2/a)

apparently due to biological activity within the sludge. As a result, it was found necessary to install an acid resistant cloth on the vacuum filter for satisfactory sludge dewatering.

Experience has demonstrated that covers over the biofilters would be useful in preventing the deposition of airborne leaves and dirt on the media. This would also assist in retaining heat lost during winter operation.

The discharge of high concentrations of suspended solids in the treatment plant effluent was also encountered after start-up. Sodium aluminate is now added to the wastewater to promote the development of flocs in the secondary clarifier and improve sedimentation. The chemical is added ahead of the second trickling filter to ensure adequate mixing.

The high rate trickling filter process has performed effectively as a roughing unit, as intended, and has achieved relatively consistent BOD and suspended solids removals of approximately 85%. Final effluent concentrations of the two parameters have averaged 380 mg/L and 280 mg/L respectively. Due to the high assimilative capacity of the receiving stream to which the effluent from this plant is discharged, more stringent effluent limitations have not been required by regulatory agencies.

The plant performance is closely monitored by five part-time operators and a laboratory technician, with suspended solids analyses made daily and BOD_5 measured two or three times per week.

The plant was constructed in 1971 at a total cost of $1 165 000. The updated value of the plant is estimated at approximately $2.0 million and annual operating costs at $61 750, as shown in Table 36.

6.5.2 **Plant J.** The wastewater from Plant J consists of effluent from the processing of fresh fruit juices and sauces. The principal products from the plant are the following:

a) apple, pear, grape and apricot juices, and juice concentrates,
b) cherry, peach, apple, raisin, and blueberry pie filling,
c) apple sauce,
d) citrus juices made from juice concentrates.

The plant operates 24 hours/day, five days/week on a year-round basis. The daily schedule consists of 16 hours of processing followed by an eight-hour clean-up shift.

Wastewater from Plant J flows to an extended aeration treatment facility which also handles the wastewater from a winery and distilled liquor plant. Although only the cumulative flow data for the two plants were available, the majority of the wastewater is produced by the juice processing plant.

TABLE 36 PERFORMANCE AND COST DATA FOR HIGH RATE TRICKLING FILTER PROCESS (PLANT I)

Capital Cost (adjusted to 1977)	$ 2 000 000
Annual Amortized Cost @ 11%	220 000
Operating Costs:	
Manpower: 3000 h/a x $10/h	30 000
Electrical Power: 650 000 kWh/a x $0.025/kWh	16 250
Chemicals:	1 500
Sludge Hauling:	14 000
Annual Operating Cost	61 750
Total Annual Cost	281 750
Cost per m^3 treated	0.35 ($1.58/1000 Igal)
Cost per kg of BOD_5 removed	($0.16/lb)

The total annual flow to the wastewater treatment plant is approximately 182 000 m^3 (40 MIG). Monthly flows vary from 6800 m^3 to 27 000 m^3 (1.5-6 MIG) with large fluctuations occurring in the daily flow rate.

A schematic of the extended aeration treatment plant is illustrated in Figure 41. Effluent from the food processing plant is passed over a 40 mesh horizontal vibrating screen for coarse solids removal. Prior to entering the wet-well all wastewater is also passed through a 1.9 cm (3/4 inch) mesh coarse screen. Provision has been made in the wet-well for the addition of nitrogen (aqua ammonia) and phosphorus (phosphoric acid). At the present time only nitrogen is added; there is sufficient phosphorus from the soaps in the cleaning water to supply bacterial growth requirements. Recirculated sludge is returned from the secondary clarifiers to the wet-well and mixed with the raw wastewater. The aeration basin contains three 56 kW (75 hp) mechanical surface aerators.

Solids are removed from the mixed liquor in two 10.6 m (35 ft) diameter clarifiers operated in parallel. The clarified effluent is then chlorinated prior to discharge to an adjacent creek. A portion of the sludge is returned to the aertion basin of the plant while the remainder is thickened by centrifuging and then removed by tank truck for final

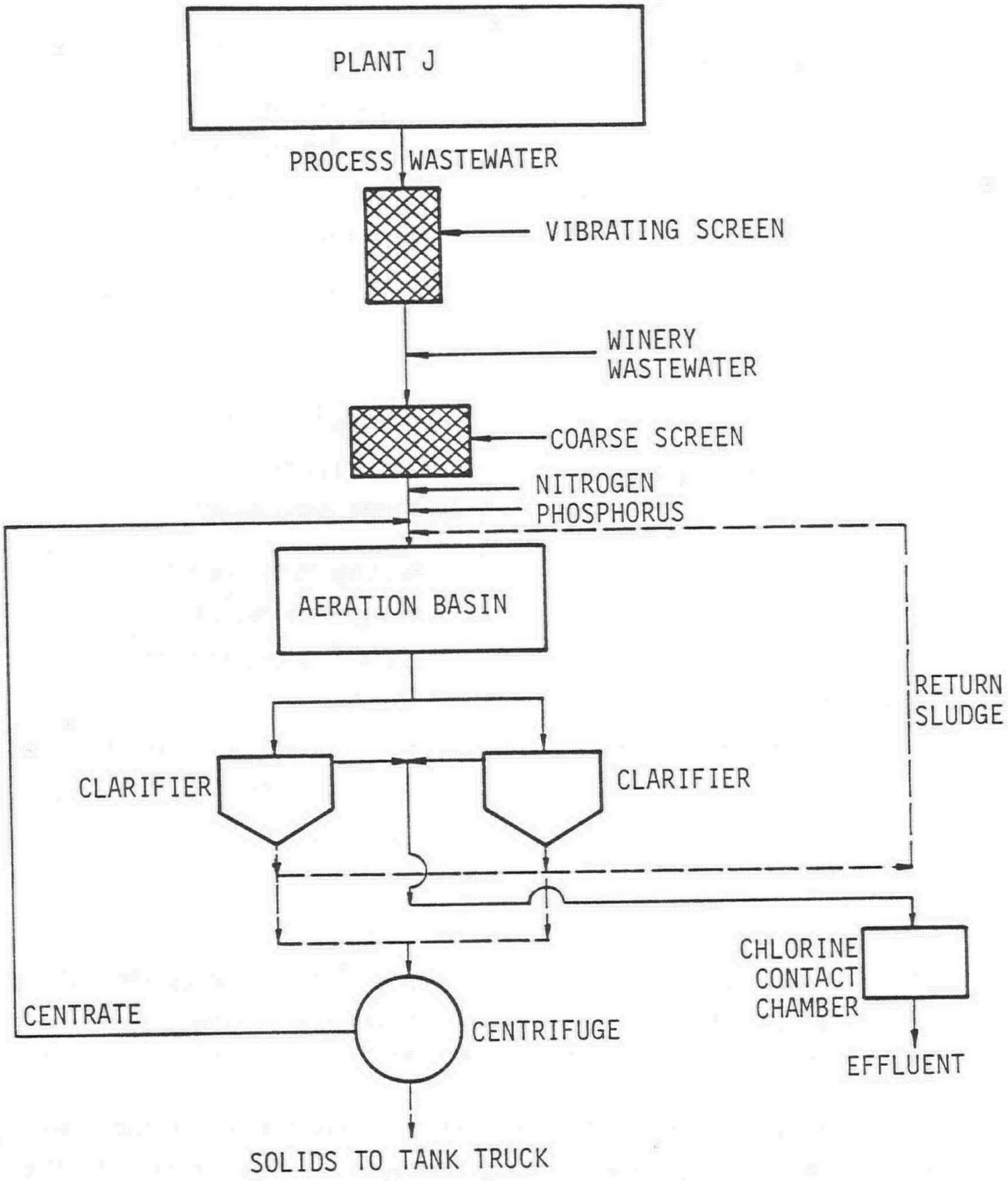

FIGURE 41 FLOWSHEET OF WASTEWATER TREATMENT PROCESS (PLANT J)

disposal to land. The centrate is returned to the headworks of the plant. Operating and design criteria for the plant are outlined in Table 37.

TABLE 37 OPERATING AND DESIGN CRITERIA FOR EXTENDED AERATION PROCESS (PLANT J)

Wastewater Characteristics	
Flow: Range	340 - 1820 m^3/d (75 000 - 400 000 Igpd)
Average	700 m^3/d (154 000 Igpd)
Design Flow:	2270 m^3/d (500 000 Igpd)
BOD:	1500 mg/L
SS:	420 mg/L
Extended Aeration Process	
Detention Time (aeration basin):	8 days
Aeration Basin Volume:	5675 m^3 (1.25 MIG)
Aeration Basin Depth:	3.7 m (12 ft)
MLSS Concentration:	3000 - 5000 mg/L
Organic Loading:	0.05 kg BOD_5/kg MLSS/d
Volumetric Loading:	184 g $BOD_5/m^3/d$ (11.5 lb $BOD_5/1000\ ft^3/d$)
Solids Retention Time:	30 - 40 days
Aeration Requirements:	3 mechanical surface aerators @ 56 kW ea. (30 kW/1000 m^3 of basin volume)
Clarifiers (two)	
Diameter:	11 m 35 (ft)
Overflow Rate:	3.9 $m^3/m^2/d$ (80 $Igpd/ft^2$) at average flow
Sludge Wasting Rate:	1135 kg/day (2500 lb/day)

Under present operating conditions the plant is achieving a BOD_5 removal efficiency of 99% and a suspended solids removal efficiency of 96%. Effluent concentrations of the two parameters average 10 mg/L and 13 mg/L, respectively.

Operating problems were experienced initially due to ice formation on the aerators during winter operation. To alleviate this problem, warm cooling water which is normally discharged directly to the creek is diverted to the aeration basin during January and February.

Problems have also been encountered with the formation of floating sludge in the secondary clarifiers. This is caused by the adherance of sludge to the thickener machinery for extended periods of time and has been most prevalent during the cherry processing season.

Problems of biological process instability have not occurred despite the fact that the food processing plant only discharges wastewater five days each week, and the daily loadings are highly variable.

Capital and operating costs for the wastewater treatment facility are summarized in Table 38. The plant was completed in 1973 at a cost of $750 000, including land. This corresponds to an estimated 1977 value of $1 100 000. The actual 1977 operating costs reported by the plant were approximately $83 000, as shown. The total annual cost and unit costs of treatment are relatively high, considering the average wastewater flow presently being treated at this plant. This can be attributed to two factors, as follows:

1) Since the plant was designed for an average flow rate considerably in excess of that presently being treated, the capital cost incurred in its construction was appreciably higher than it would have been had a smaller plant, designed only for the current average wastewater flow, been constructed. As a capital amortization cost allowance is included in the calculation of total annual cost, and subsequently in the calculation of unit treatment costs, these costs reflect this high construction expense.

2) The operating costs present in Table 38 are those actually reported by plant personnel, rather than as calculated for previous plants, using simply the manpower and electrical requirements of the process. Items such as the engineering cost allocation, and administration costs, which contribute significantly to the annual operating cost in this case, have not been estimated for other plants due to the highly variable nature of these costs from plant to plant and the obvious difficulty in attempting to derive a reliable estimate of this operating expense for each particular plant.

TABLE 38 CAPITAL AND OPERATING COSTS FOR EXTENDED AERATION TREATMENT PROCESS (PLANT J)

Capital Cost (adjusted to 1977)		$1 100 000	
Annual Amortized Cost @ 11%			$121 000
Operating Costs:			
Manpower:	$ 27 000		
Electrical Power:	7 800		
Equipment Maintenance:	4 000		
Sludge Handling:	1 200		
Plant Monitoring and Laboratory Analysis:	7 350		
Engineering Cost Allocation:	13 800		
Administration:	15 000		
Miscellaneous:	6 000		
Annual Operating Cost:			$ 82 950
Total Annual Cost			$203 950
Cost per m^3 Treated			$1.12 ($5.10/1000 Igal)
Cost per kg of BOD_5 Removed			$0.75 ($0.34/lb)

Operational staff consists of a foreman who is responsible for the operation of the municipal sewage treatment plant, a full-time subforeman and a plant operator who spends approximately 80% of his time at the food-processing wastewater treatment plant.

Operation of the plant is monitored continuously with automatic samplers and flow metering equipment. Composite samples of influent and effluent wastewater are collected daily and subjected to COD tests. Temperature and pH are monitored daily. BOD and total suspended solids concentrations are determined twice weekly and nutrient (N & P) concentrations in the effluent are determined weekly.

Composite recirculated sludge samples are also collected regularly. Total suspended solids are determined three times per week and volatile suspended solids are determined twice weekly. The data are used to monitor sludge density to facilitate control of the sludge recirculation rate, and to monitor sludge activity in order to control the mixed liquor suspended solids concentration.

6.6 Beverage Industry

6.6.1 Plant K. Plant K is a distillery which processes approximately 145 tonnes (160 tons) of corn, rye and barley malt per day on a 24 hour/day, five-day/week basis. The plant presently operates seven months per year. Main products are beverage and industrial alcohol, with fusel oil and high protein livestock feed material recovered as byproducts.

Wastewater originates from equipment and floor washings, evaporator condensate, boiler blowdown, gin still bottoms and rectifier bottoms. The average daily flow of 908 m^3 (200 000 Igal) is discharged to a 45 m^3 (10 000 Igal) sump. From here, two pumps controlled by level switches lift the wastewater to the treatment plant.

Wastewater treatment consists of extended aeration followed by secondary clarification and a polishing lagoon, as illustrated in Figure 42. The operating and design criteria for the plant are summarized in Table 39.

Clarifier and lagoon effluents are monitored weekly by the plant operator for COD and suspended solids. A high quality effluent has generally been achieved with removals in excess of 95% and 90% for these two parameters respectively. Effluent from the secondary clarifier generally has a COD of less than 60 mg/L and this is further reduced to less than 50 mg/L in the lagoon. The lagoon reduces the suspended solids concentration in the clarifier effluent from approximately 20 mg/L to less than 15 mg/L.

Although COD is used as a treatment plant control parameter and to monitor treatment efficiency, investigations have revealed that the COD to BOD_5 ratio of the wastewater generally falls within the range of 3:1 to 8:1. The higher COD:BOD_5 ratio is usually encountered in the treatment plant efffluent, after the majority of the biodegradable material has been removed. Sludge is usually wasted on a monthly basis to drying beds located on the plant property.

The wastewater has been found to be deficient in both nitrogen and phosphorus. This is compensated for by a weekly addition of 45 kg (100 lb) of urea and 23 kg (50 lb) of sodium dihydrogen phosphate to the wastewater sump.

It has been necessary to chip ice from around the aerators during winter months. Some freezing problems with the clarifier have also been encountered in cold weather.

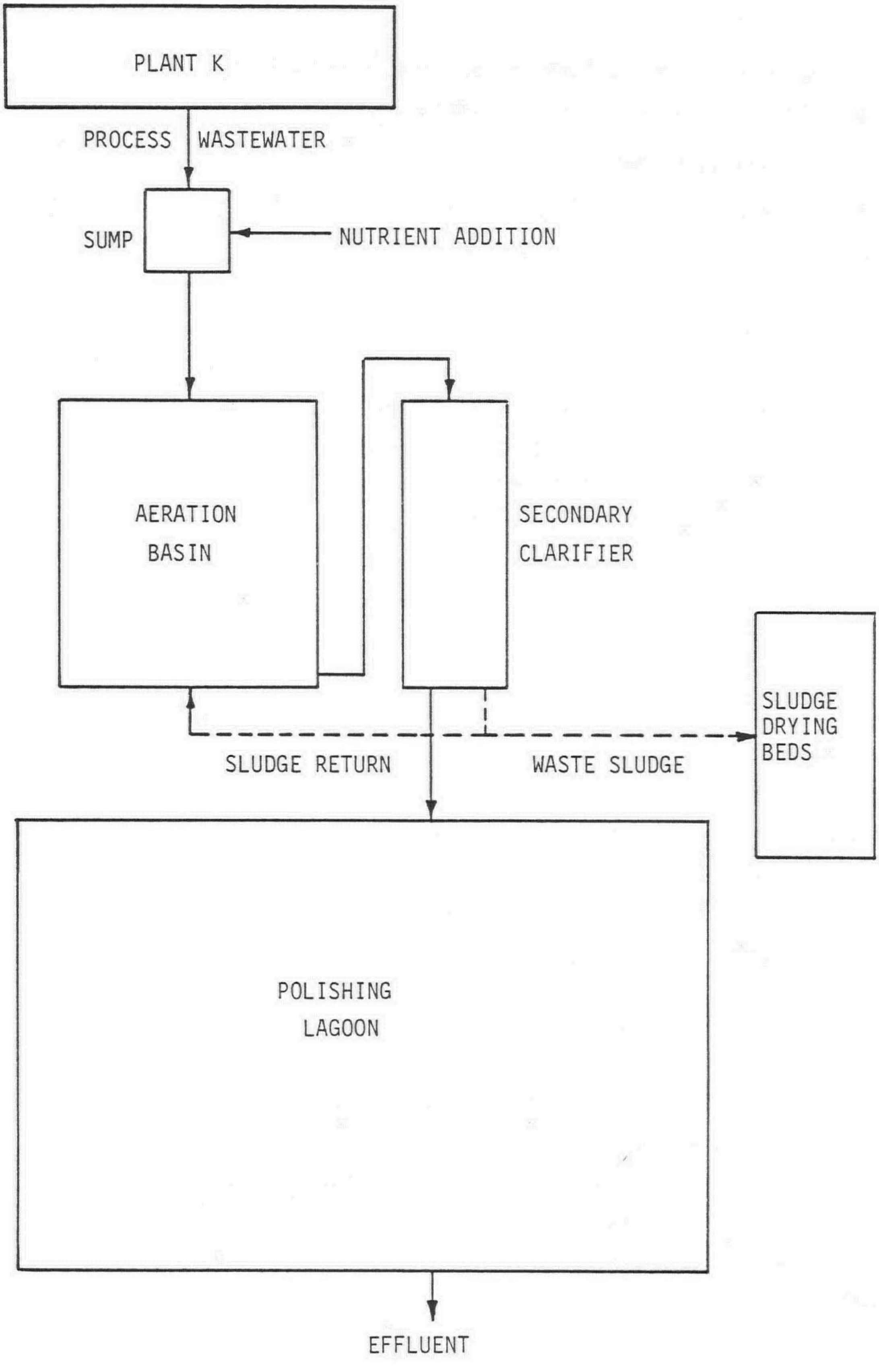

FIGURE 42 FLOWSHEET OF WASTEWATER TREATMENT PROCESS (PLANT K)

TABLE 39 OPERATING AND DESIGN CRITERIA FOR EXTENDED AERATION/ POLISHING LAGOON PROCESS (PLANT K)

Wastewater Characteristics	
Flow: Low	23 m^3/d (5000 Igpd) - weekends
Peak	2050 m^3/d (450 000 Igpd)
Average	1000 m^3/d (220 000 Igpd) - 5 days/week
BOD:	Average approximately 800 mg/L
COD:	1000 - 1500 mg/L
SS:	200 - 300 mg/L
Extended Aeration Process	
Organic Loading Rate:	0.16 kg BOD_5/kg MLSS/d
Volumetric Loading Rate:	800 g/m^3/d (50 lb BOD_5/1000 ft^3/d)
MLSS Concentration:	2000 - 8000 mg/L
Detention Time:	24 hours
Aeration Requirements:	2 Mechanical Surface Aerators @ 19 kW each (4 kW/1000 m^3 of basin volume)
Polishing Lagoon	
Depth:	1.2 m (4 ft)
Detention Time:	5 days

Since the distillery is operated only seven months per year, the waste treatment plant must be restarted when production commences. The start-up period usually requires from 7 to 10 days, although in cold weather it may be extended to 21 days.

Plant operation is the responsibility of a lab technologist, who spends approximately four to five hours per week monitoring plant performance and making adjustments as necessary. An additional hour per week is spent inspecting and lubricating mechanical equipment and adding the necessary nutrients.

As shown in Table 40, the estimated present value of the plant is approximately \$1 020 000. It was originally constructed in 1969 at a cost of \$490 000. Annual operating costs are estimated at approximately \$7500.

TABLE 40 CAPITAL AND OPERATING COSTS OF EXTENDED AERATION/ POLISHING LAGOON PROCESS (PLANT K)

Costs:		
Capital Cost (adjusted to 1977)	$ 1 020 000	
Annual Amortized Capital Cost @ 11%		$112 200
Operating Costs:		
Manpower: 6 h/wk x 30 wks/a x $10/h	$ 1 800	
Chemicals (nutrients):	$ 1 000	
Electrical Power: 50 hp x 0.746 kW/hp x 5040 h/a x $0.025/kWh	$ 4 700	
Annual Operating Cost		$ 7 500
Total Annual Cost	$ 119 700	
Cost per m^3 Treated		$0.63 ($2.85/1000 Igal)
Cost per kg BOD_5 Removed		$0.79 ($0.36/lb)

6.7 Fishing Processing Industry

6.7.1 Plant L. Plant L is a salmon processing plant that produces fresh, fresh-frozen and smoked-fish products. In addition to salmon, the plant processes aquaculture fish, primarily rainbow trout and immature salmon. The salmon processing season runs for approximately six months with the processing of aquaculture fish occurring during the remaining six months of the year. The plant operates on 6-1/2 hour/day, five days per week schedule.

Wastewater originates as washwater from fish cleaning and gutting operations, and as table and floor washdown water. During the salmon processing season, flows vary from 1.4 to 4.5 m^3/d (300 to 1000 Igpd) with an average flow rate of 2.6 m^3/d (580 Igpd). While processing aquaculture fish, these increase to an average of 13.6 m^3/d (3000 Igpd).

The wastewater treatment system is an extended aeration process as illustrated in Figure 43. Raw wastewater flows to a wet well where grinder pumps lift it to an aeration basin. Aeration is provided by 3.7 kW (5 hp) mechanical surface aerator.

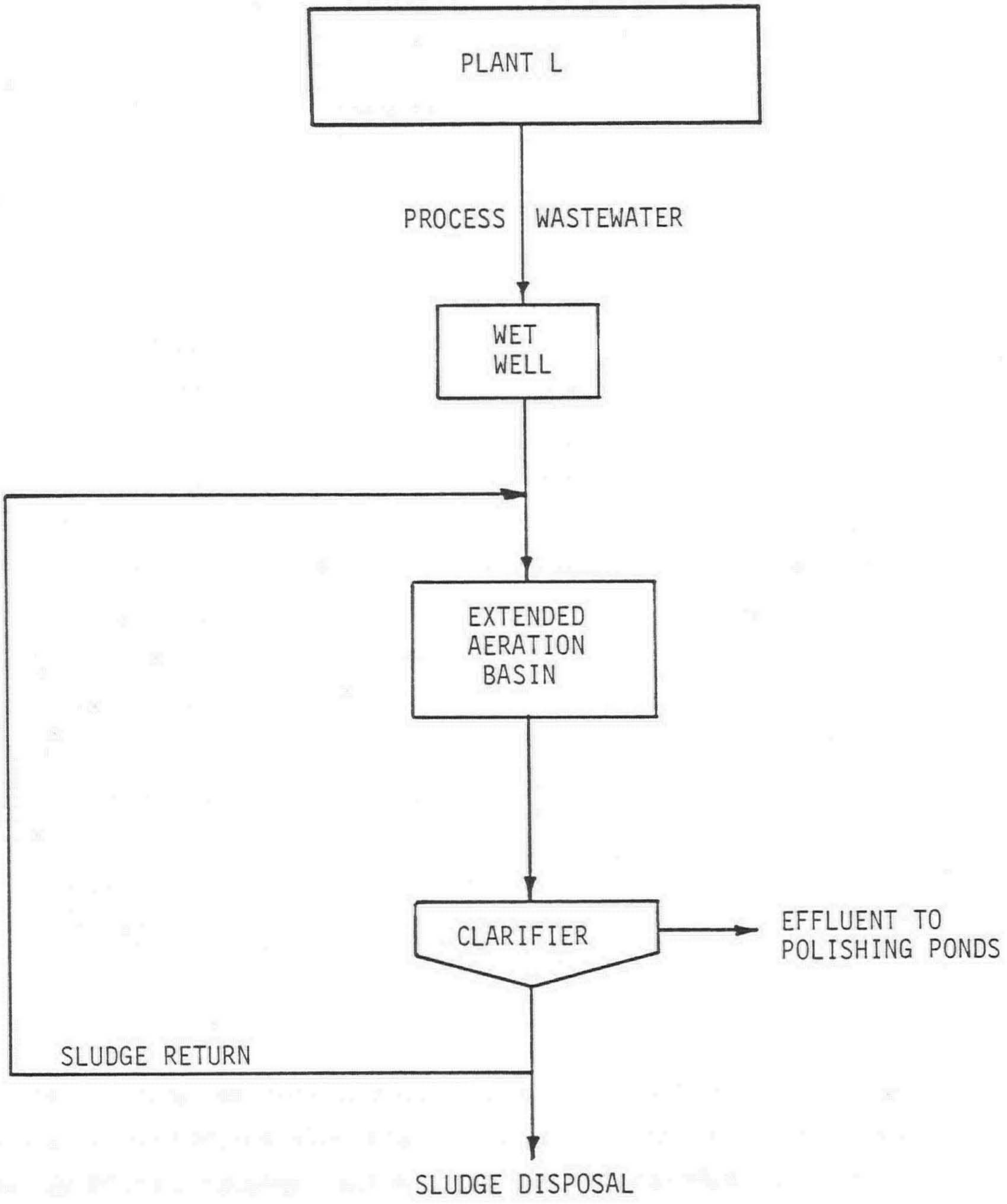

FIGURE 43 FLOW DIAGRAM OF EXTENDED AERATION WASTEWATER TREATMENT PROCESS (PLANT L)

Overflow from the aeration basin then enters a clarifier. Settled sludge is returned to the aeration basin from the clarifier by means of an air lift pump. Clarified effluent is discharged to a polishing pond which acts as an exfiltration basin. Table 41 summarizes design and operating criteria for the plant.

TABLE 41 OPERATING AND DESIGN CRITERIA FOR EXTENDED AERATION PROCESS (PLANT L)

	Salmon Processing Season	Aquaculture Fish Processing Season
Wastewater Characteristics		
Flow (m/day):		
Range:	1.4 - 4.5	7.7 - 18
Average:	2.6	13.6
BOD_5 (mg/L)	690	480
COD (mg/L)	2000	810
SS (mg/L)	500	230
Extended Aeration Process		
Aeration Time	28 days	5.5 days
Volumetric Loading	24 g $BOD_5/m^3/d$ (1.5 lb BOD_5/ 1000 ft^3/d)	86 g $BOD_5/m^3/d$ (5.4 lb BOD_5/ 1000 ft^3/d)
Aeration Requirements	50 kW/1000 m^3 of basin volume	50 kW/1000 m^3 of basin volume
Clarifier		
Overflow Rate	0.29 $m^3/m^2/d$ (6 Igpd/ft^2)	1.5 $m^3/m^2/d$ (31 Igpd/ft^2)
Detention Time	4.3 days	20 hours

Wastewater flows have continuously been much lower than the design flows during operation of the plant. Although BOD_5 removal efficiencies have been within the acceptable range for an extended aeration system (i.e., greater than 90%), suspended solids removal efficiencies have been less than 65%. Apparently this has resulted from the extremely long retention times and overaeration of the mixed liquor. This results in the auto-oxidation of the biological floc, producing a pin-point floc which is extremely difficult to settle.

Other operational problems of the treatment system are listed below:

a) Raw wastewater pumps periodically clog with fish bones or other coarse solids.
b) Float level controls in the wet well become caked with grease.
c) The scum removal system in the clarifier has been inadequate.

In addition, the wastewater usually contains a significant number of fish eggs during the salmon processing season. The cases from these eggs become hard and cannot be broken down during the treatment process.

At the time of the field visit, an extended aeration pilot plant was being used to establish optimum loading rates and aeration requirements. Preliminary results have indicated that a 36-hour hydraulic detention time is required to achieve adequate treatment.

The treatment plant was built in 1975 at a capital cost of $80 000. The updated value of the plant is estimated at $93 000. It has not operated continuously since that time, as the pilot plant studies currently utilize most of the wastewater. Operational costs for the large plant have been minimal. It does not employ an operator, although someone has been responsible for periodically visiting the plant (appproximately three times weekly). Since the plant has been relatively unused, maintenance requirements have been very low.

6.8 Summary of General Observations

In reviewing the operation of biological wastewater treatment systems at the numerous food processing plants discussed in this section, a number of recurring problems and industry concerns were identified. These are as follows:

a) treatment plant supervision,
b) flow equalization,
c) sludge disposal,
d) nutrient addition,
e) winter operation,
f) treatment costs.

The above problem/concern areas warrant further discussion.

6.8.1 Treatment Plant Supervision. Without exception, it was found that the treatment plants operating most successfully were those which employed a trained, full-time operator.

Due to the variable nature of food processing wastewaters, the potential for upset of a biological treatment system is relatively high. Despite claims by a number of treatment equipment manufacturers and distributors, that their particular process operates with little or no supervision, very few biological treatment plants are truly capable of consistently producing an effluent of acceptable quality when treating a wastewater with highly variable flow and strength, without close supervision.

This is particularly true of suspended growth systems (i.e., activated sludge, extended aeration, and oxidation ditch processes) where a number of problems, such as hydraulic or organic overloading, sludge bulking, or rising sludge, in the secondary clarifier may develop over a relatively short period of time, resulting in a rapid deterioration in effluent quality. These problems can only be overcome if a knowledgeable, responsible operator is on-site to identify them and take the appropriate corrective action. An operator at a small plant may be assigned other duties besides operating and maintaining the treatment facility. However, it is imperative that he be given sufficient time and training to properly monitor and maintain the facility.

A successful operator will be one who is completely familiar with the particular food processing plant and its associated wastewater characteristics. In addition, he should be knowledgeable in the fundamentals of biological treatment and be aware of the potential operating problems associated with the specific treatment process, their causes and solutions. Finally, the treatment plant operator should be familiar with the maintenance and repair of all mechanical equipment, such as pumps, motors and compressors, upon which the successful operation of the facility relies.

The operator should establish a daily schedule for monitoring the primary physical, chemical and biological parameters of the process, enabling him to assess its performance and adjust operating conditions accordingly.

It is recognized that in the case of very small food processing plants, economics may preclude the ability of the plant to retain a trained, full-time treatment plant operator. In such cases, it is recommended that the potential for employing alternative methods of treatment and disposal, requiring considerably less supervision, such as joint municipal/industrial treatment be thoroughly investigated prior to opting for on-site biological treatment.

6.8.2 Flow Equalization. In the course of conducting the site visits discussed in this section, it became apparent that the majority of food processing plants operate on an eight to ten-hour processing period per day, five or six days per week. The majority of the daily wastewater flow generally occurs at the end of this processing shift during the clean-up of equipment, floors and tables, and the dumping of the contents of product wash tanks, etc. Overnight and weekend flows are frequently negligible, and when they do occur, are made up largely of relatively uncontaminated cooling water.

Many wastewater treatment facilities which are sized to handle the average daily wastewater flow have difficulty providing adequate treatment for flow surges signficantly in excess of this average flow. This is particularly true of some components of the treatment process such as secondary clarifiers, whose performance is dependent on flow-through velocity. On the other hand, hydraulic and organic loadings significantly below the design rate frequently have a deleterious effect on the biological reactor stage of the process. The lack of an adequate food source for extended periods of time results in the microorganisms entering an auto-oxidation growth phase in which they consume their own cell protoplasm. This, in turn, results in the development of a pin-point floc with poor settling characteristics.

Both problems can be alleviated by providing sufficient storage capacity at the front end of the process to permit the flow surges to be temporarily held back, and fed to the treatment plant during periods of low flow.

Flow equalization can result in significant improvements in effluent quality from plants experiencing highly variable hydraulic and organic loading rates. It can also simplify the operation of the plant. This frequently results in lower capital costs for other components of the treatment process, which can be confidently sized for the average wasterwater flow rate, rather than making allowances for peaking factors.

One particularly effective means of providing flow equalization, which has been demonstrated by the food processing industry, is the use of anaerobic lagoons as the first stage in the treatment sequence. If properly designed, they can provide not only flow equalization, but pretreatment of the wastewater and an effective means of disposing and digesting biological sludge produced in the subsequent aerobic treatment steps.

6.8.3 Sludge Disposal. The amount of sludge which will be generated and which will require subsequent treatment and disposal should be an important consideration in selecting a wastewater treatment process. At some of the plants visited, sludge handling posed an enormous problem and constituted a major portion of the annual operating cost.

These were generally plants at which voluminous amounts of sludge were produced, requiring haulage to an ultimate disposal site some distance away.

Those plants for which sludge handling pose relatively few problems were the extended aeration type, which had very low sludge yields, and those which had on-site sludge treatment and disposal facilities.

As discussed under flow equalization, anaerobic lagoons provide an effective means of treating and disposing of biological sludge, as well as performing other functions.

In many cases, on-site sludge dewatering and disposal by means of drying beds or spray irrigation also provides an effective and relatively inexpensive means of handling partially stabilized sludges, such as those from extended aeration plants.

In cases where insufficient land is available to permit on-site disposal of sludges, one of the most important considerations in the selection of a wastewater treatment process must be the amount of sludge generated by the process and the cost of disposing of the same.

6.8.4 Nutrient Addition. A number of food processing wastewaters are known to be deficient in either or both of the two nutrients necessary for effective biological treatment, nitrogen and phosphorus. In some cases, these nutrients were added continuously at controlled rates based on calculated requirements determined from chemical analysis of the raw and treated waste. However, in other cases, nutrient addition amounted to the addition of "slugs" of these chemicals to the wastewater on a weekly basis.

The latter approach is not considered the optimum method of nutrient addition. Since the cost of purchasing these chemicals is relatively high, and the discharge of excessive amounts of nitrogen and phosphorus is undesirable from a regulatory agency's point of view, every attempt should be made to minimize the amount of supplementary nutrients required. On the other hand, if the wastewater is in fact nutrient deficient, then it is important to ensure that adequate amounts of nitrogen and phosphorus are present at all times to permit the microorganisms to utilize the soluble BOD_5 effectively.

This can only be done by monitoring the BOD_5, nitrogen and phosphorus concentrations of the raw and treated wastes on a regular basis. The rate of nutrient addition can then be adjusted accordingly. This is particularly important in industry sectors where a variety of commodities are processed throughout the year, such as fruit and vegetable processing. As the commodity changes, so will wastewater characteristics and the nutrient requirements.

6.8.5 Winter Operation. Cold weather operation of biological treatment systems poses two specific problems. The first being a reduction in treatment efficiency due to reduced biological activity, and the second being operational problems of a mechanical nature associated with freezing conditions.

To ensure treatment plant performance conforms with regulatory agency requirements on a year-round basis, it is essential that its design be based on the adverse conditions under which the plant will be expected to perform. Considering the highly seasonal nature of most food processing operations, the condition which should be used for design purposes may be either peak hydraulic and organic loading or minimum operating temperature (or both if the two occur concurrently). The plant size required to achieve the desired effluent quality under each operating condition should be determined and the larger size selected for design purposes.

The sensitivity of the specific treatment process to temperature effects should also be considered in the selection of a treatment system. In general, suspended growth systems such as activated sludge, extended aeration and oxidation ditches have been found to maintain superior performance in cold weather to that of trickling filters and lagoons.

Specific mechanical problems associated with winter operations were identified at virtually all plants visited where treatment units were exposed to the air. Problems such as the freezing of mechanical surface aerators, trickling filter media and distribution equipment, and skimming mechanisms in clarifiers were commonly reported.

Some of the following design features and operating methods should be considered to alleviate these problems and improve treatment efficiency in cases where treatment plants are expected to perform under severe climatic conditions:

1) Wherever feasible, treatment units should be enclosed to minimize heat loss. While this is obviously not feasible for large aeration basins, it is considered fundamental for the successful winter operation of trickling filters and clarifiers and is absolutely essential for rotating biological contactors.

2) The use of diffused air aeration equipment in place of mechanical surface aerators can significantly reduce winter operating problems in open aeration basins. The spray generated by surface aerators has a tendency to freeze onto aerator vanes, shrouds, and structural supports creating a heavy ice load which can lead to mechanical and/or structural

failure of the equipment. This necessitates close supervision in winter months and frequent ice removal from the equipment. Diffused air aeration equipment, being totally submerged, is not susceptible to these problems.

3) It is generally advisable to minimize the amount of wastewater requiring treatment by diverting any uncontaminated flows away from the treatment facility for reuse or separate disposal. However, there may be some advantage in winter months to directing hot uncontaminated wastewater flows, which normally bypass the treatment plant, through the facility, thereby elevating its operating temperature. Care must be taken, however, to ensure that this practice does not significantly reduce detention time in the plant, which may further reduce treatment efficiency.

6.8.6 Treatment Costs. The primary concern of any industry faced with the proposition of having to install wastewater treatment facilities is the cost of constructing and operating these facilities.

Unit treatment costs have been summarized for those plants for which such data could be generated, and are presented in Figures 44 and 45 as a function of plant size. As explained earlier, the unit treatment costs are based on the total annual cost which includes the annual operating cost of the plant, plus an 11% annual amortization allowance on the capital cost.

As illustrated in Figures 44 and 45, considerable scatter exists in the cost data. This scatter can be attributed to variations in wastewater characteristics, treatment processes, and effluent qualities among the plants considered, as well as other site-specific variables such as construction cost.

Due to the number of variables associated with this cost data, no attempt has been made to provide the reader with a rigorous cost-effective analysis of the alternative processes investigated. Rather, the data will serve to illustrate the "order of magnitude" of these costs and the trend of decreasing unit treatment costs with increasing plant size.

6.9 Conclusions

Biological wastewater treatment facilities at the twelve food processing plants discussed in this section illustrate that such systems can perform effectively in northern climates if properly designed and operated. Endeavours by senior management at

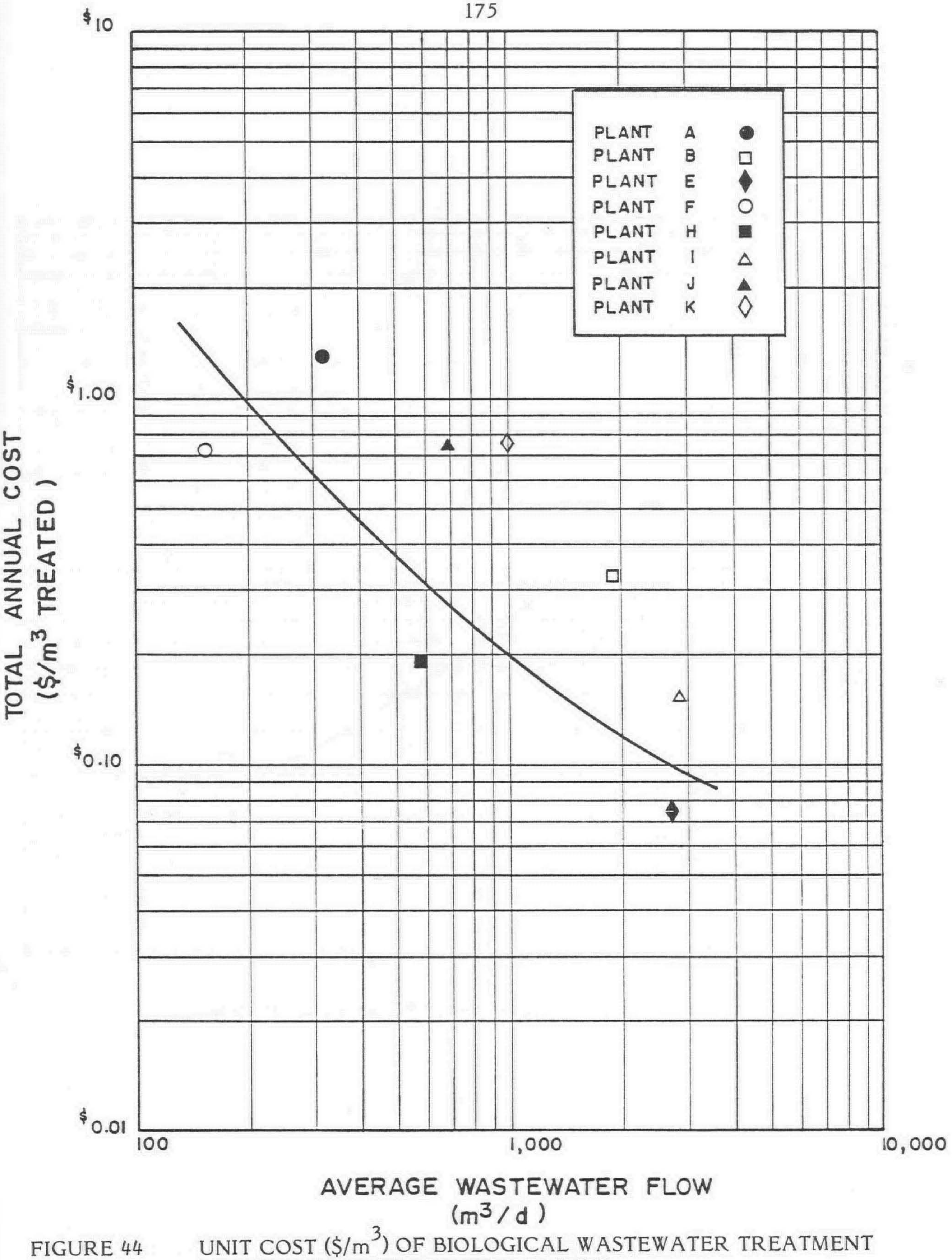

FIGURE 44 UNIT COST ($/m^3) OF BIOLOGICAL WASTEWATER TREATMENT AT EIGHT FOOD PROCESSING PLANTS

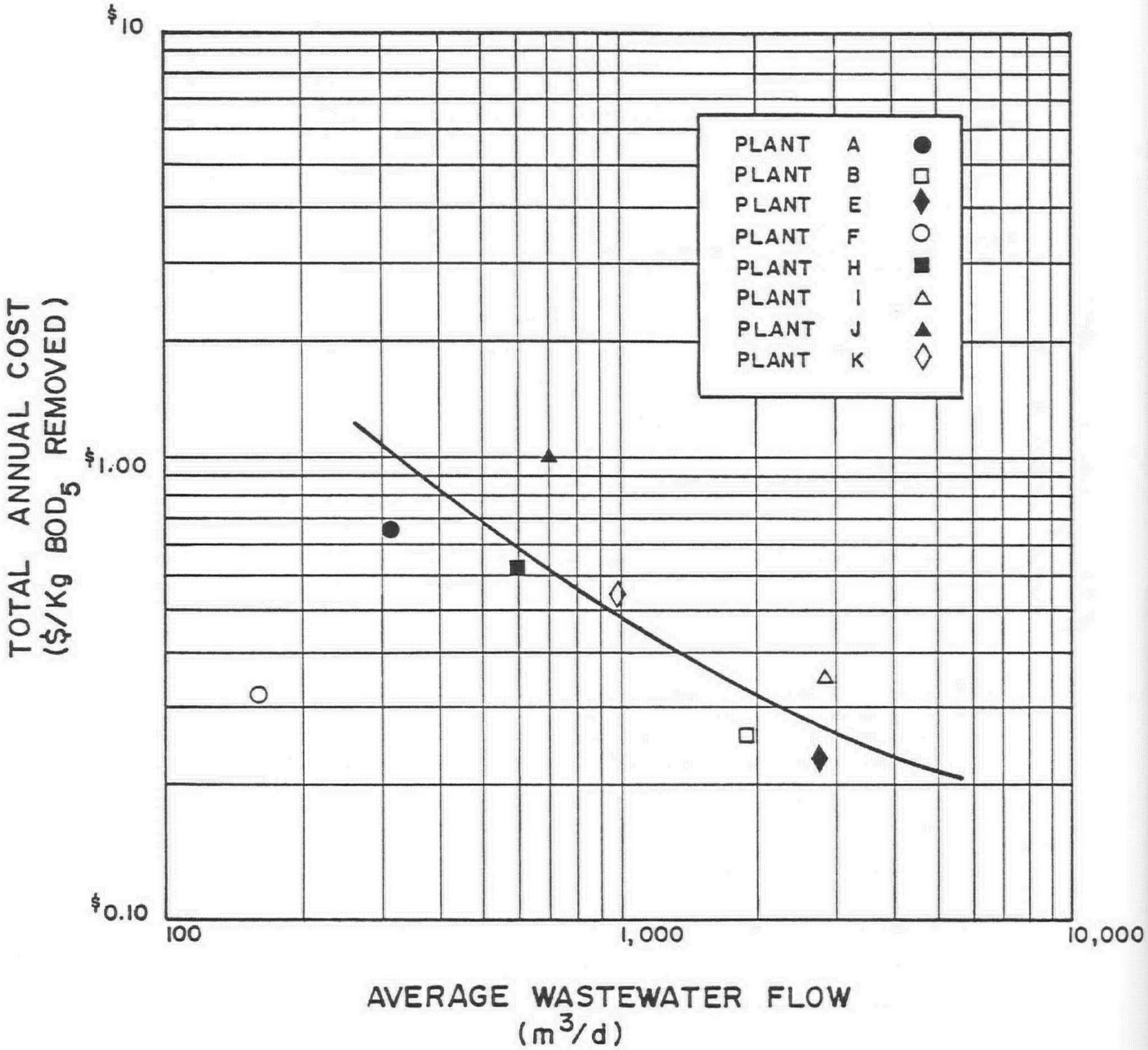

FIGURE 45 UNIT COST ($/kg BOD_5 REMOVED) OF BIOLOGICAL WASTEWATER TREATMENT AT EIGHT FOOD PROCESSING PLANTS

these plants to meet their environmental responsibilities have resulted in effective programs of wastewater management.

Such wastewater management programs necessitate more than simply a capital expenditure of funds for installation of an appropriate and effective wastewater treatment system. An on-going commitment must be made to ensure that competent operation of the process is provided by trained personnel, and that in-plant measures are controlled so as to minimize wastewater production and prevent treatment plant upsets. Only if this commitment is genuinely made can cost-effective operation of a wastewater treatment facility be assured.

REFERENCES

1. Stanley Associates Engineering Ltd., "Design and Operation Manual for Land Application of Food Processing Wastewater", prepared for the Environmental Protection Service, Environment Canada, Report No. EPS 3-WP-78-5, Ottawa, 1977.

2. Dearborn Environmental Consulting Services, "Evaluation of Alternative Physical/Chemical Technology for Water Reuse, By-Product Recovery and Wastewater Treatment - A Manual for the Food Processing Industry", Report No. EPS 3-WP-79-3, Environmental Protection Service, Environment Canada, 1979.

3. Canada, Department of Environment, "Fish Processing Operations Liquid Effluent Guidelines", reprinted from the Canada Gazette, Part I, May 31, 1975, in Environmental Protection Service Report No. EPS 1-WP-75-1, Ottawa, 1975.

4. Bissett, D.W., "The Toxicity of Food Processing Effluents to Fish". Proceedings of Seventh National Symposium on Food Processing Wastes, Atlanta, Georgia, April 6-9, 1976.

5. American Public Health Association, American Water Works Association, and Water Pollution Control Federation, Standard Methods for the Examination of Water and Wastewater, APHA, Washington, D.C., 1976.

6. U.S. Environmental Protection Agency, Technologcy Transfer, "Handbook for Monitoring Industrial Wastewater", Washington, D.C., 1973.

7. Canada, Department of Environment, "Meat and Poultry Task Force Proceedings", unpublished, 1977.

8. Bissett, D.W., "Discussion Document for the Canadian Dairy Industry", in preparation for Environmental Protection Service, Environment Canada.

9. Stanley Associates Engineering Ltd., "State of the Art Review of Treatment Technology in the Fruit and Vegetable Processing Industry in Canada", prepared for Environmental Protection Service, Environment Canada, Report No. EPS 3-WP-77-5, Ottawa, 1976.

10. Broderson, K.T., "A Study of the Waste Characteristics of Fish Processing Plants Located in the Maritime Region", prepared for Environmental Protection Service, Environment Canada, EPS 4-WP-72-1, Halifax, 1972.

11. Hrudey, S.E., "Pretreatment of Meat and Poultry Products Plants Effluents Prior to Discharge to Municipal Sewerage and Treatment Systems", Meat and Poultry Regulations and Guideline Seminar, sponsored by Environmental Protection Service, Environment Canada, Montreal, P.Q., 1978.

12. Tchobanoglous, G., "Wastewater Treatment for Small Communities", Part I and II, Public Works, July and August, 1974.

13. Rollag, D.A. and Dornbush, J.N. "Anaerobic Stabilization Pond Treatment of Meat Packing Wastes", Proceedings of 21st Purdue Industrial Wastes Conference, 768-782, Lafayette, Indiana, 1966.

14. Wymore, A.H. and White, J.E. "Treatment of Slaughterhouse Waste Using Anaerobic and Aerated Lagoons", Proceedings of 23rd Purdue Industrial Wastes Conference, 601-618, Lafayette, Indiana, 1968.

15. Sollo, F.W., "Pond Treatment of Meat Packing Plant Wastes", Proceedings of Symposium on Waste Stabilization Lagoons, USPAS, 1960, cited in Dornbush, J.N., "State of the Art - Anaerobic Lagoons", 2nd International Symposium for Waste Treatment Lagoons, Kansas City, Missouri, June 1970.

16. U.S. Environmental Protection Agency, Waste Treatment - Upgrading Meat Packing Facilities to Reduce Pollution, EPA Technology Transfer Seminar Pubication, Washington, D.C., 1973.

17. Wells, W.J., Wells, P.B., and Alleman, D.D., "Treatment Capabilities of an Extended Aeration System Following Anaerobic Lagoons Treating Meat Packing Wastes", Proceedings of the Sixth National Symposium on Food Processing Wastes, U.S. Environmental Protection Agency, Madison, Wisconsin, April, 1975.

18. Chittenden, J.A., Ordi, L.E. and Witherow, J.L., "Control of Odours from Anaerboic Lagoons Treatment Meatpacking Wastes", Proceedings of the Eighth National Symposium on Food Processing Wastes, March 1977.

19. Boyko. B.I. and Rupke, J.W.G., "Aerated Lagoons in Ontario - Design and Performance Considerations", 2nd International Symposium for Waste Treatment Lagoons, Kansas City, Missouri, June 1970.

20. Metcalf and Eddy Inc., Wastewater Engineering, McGraw-Hill Book Company, 1972.

21. Adams, C.E. and Ecknefelder, W.W. (eds), Process Design Techniques for Industrial Waste Treatment, Enviro Press, Inc., 1974.

22. Sutton, P.M. and Jank, B.E. "The Basic Principles and Process Alternatives for Biological Nitrogen Removal", Environment Canada, EPS Technology Transfer Seminar on Alternatives for Nutrient Control, Kelowna, B.C., 1975.

23. Sutton, P.M. and Jank, B.E., "Design Considerations for Biological Nitrification-Denitirification Systems", Environment Canada, EPS Technology Transfer Seminar on Alternatives for Nutrient Control, Kelowna, B.C., 1975.

24. Drynan, W.R. and Bissett, D.W., "The Use of Plastic-Media Trickling Filters for Wastewater Treatment", Department of the Environment, the University of Waterloo Research Institute, June 1973.

25. McCarty, P.L., "Anaerobic Waste Treatment Fundamentals - Parts 1, 2, 3, and 4", Public Works, September-December, 1964.

26. McCarty, P.L., "Biological Treatment of Food-Processing Wastes", Proceedings of the First National Symposium on Food Processing Wastes, Corvallix, Oregon, 1970.

27. Kroeker, E.J., Schulte, D.D., Lapp, H.M., and Sparling, A.B., "Anaerobic Digestion Stability and Food Processing Waste Treatment", Presented at the First International Congress on Engineering and Food, Boston, Mass., 1976.

28. Morpey, D., "Anaerobic Digestion - A Food and Pestilent Congregation of Vapours", Science Dimension, 8 (1): 16 - 21, 1976.

29. Guo, P.H.M., Fowlie, P.J., and Jank, B.E., "Activated Sludge Treatment of Wastewaters From The Dairy Products Industry", Proceedings of the Ninth National Symposium on Food Processing Wastes, Denver, Colo., 1978.

30. McGraw-Hill, Engineering News Record.

ACKNOWLEDGEMENTS

The preparation of this manual would not have been possible without the assistance and cooperation of a great number of individuals, governments and industries.

We wish to acknowledge the staff of Environment Canada, particularly Messrs. D.W. Bissett, P.H.M. Guo, J.M. Haskill, and B.E. Jank for providing technical information and assisting in the preparation of the manual.

In addition we acknowledge those individuals from the Environmental Protection Service regional offices and provincial pollution control agencies for their assistance in arranging visits to the food processing plants visited during the course of this study.

Finally we gratefully acknowledge the cooperation and assistance provided by those individuals and companies within the food processing industry in Canada and the United States who participated in the study.

Stanley Assoicates engineering and technical staff involved in the project were:

B. Croft
R. Dawson
C. Fulton
R. Johnson
P. Kelley
E. Kroeker
A. Lamb
P. Mulyk
L. Ramsay

APPENDIX I

REGULATORY AGENCY REQUIREMENTS AND THE APPROVALS PROCESS

Editor's Note: The reader is cautioned that the requirements and approvals procedures described herein are subject to change.

APPENDIX I REGULATORY AGENCY REQUIREMENTS AND THE APPROVALS PROCESS

INTRODUCTION

A primary objective in the planning of a wastewater treatment facility is the fulfillment of regulatory agency requirements with respect to public health protection and pollution control. Since these requirements vary from province to province, and between federal and provincial levels of government, confusion sometimes arises over the necessity for and method of obtaining the various approvals required.

The following discussions are intended to briefly outline the procedures involved in obtaining the necessary approvals from provincial regulatory agencies for construction and operation of a wastewater treatment facility. In addition, the Acts and Regulations which govern the discharge of liquid effluents are identified. As this is not intended to be a detailed province by province discussion of the permit application and review process, the reader is referred to those Acts and Regulations mentioned for more specific information.

Generally, a Permit to Construct and/or a Permit to Operate a wastewater treatment facility will be required from the provincial regulatory agency. Procurement of a Permit to Construct usually requires presentation of sufficient information to satisfy the agency that the proposed works will indeed protect the receiving environment from excessive contamination. The Permit to Operate is usually issued upon completion of the treatment facility and sets out the conditions and limitations imposed on the discharge (e.g., quantity and quality, permissible discharge period, monitoring requirements, etc). These conditions are usually established on an individual basis giving due consideration to the size of the operation, the amount of wastewater to be disposed of, the assimilative capacity of the receiving stream, and downstream water use requirements.

Alberta

Section 4 of the Clean Water Act and the Clean Water (Industrial Plants) Regulations outline the procedures and requirements an establishment must comply with to obtain a permit to construct and licence to operate a wastewater treatment facility. The approvals process is illustrated in Figure 46.

The application for a Permit to Construct must be made to the Director of Standards and Approvals by the owner of the facility, or his authorized agent, at least 90

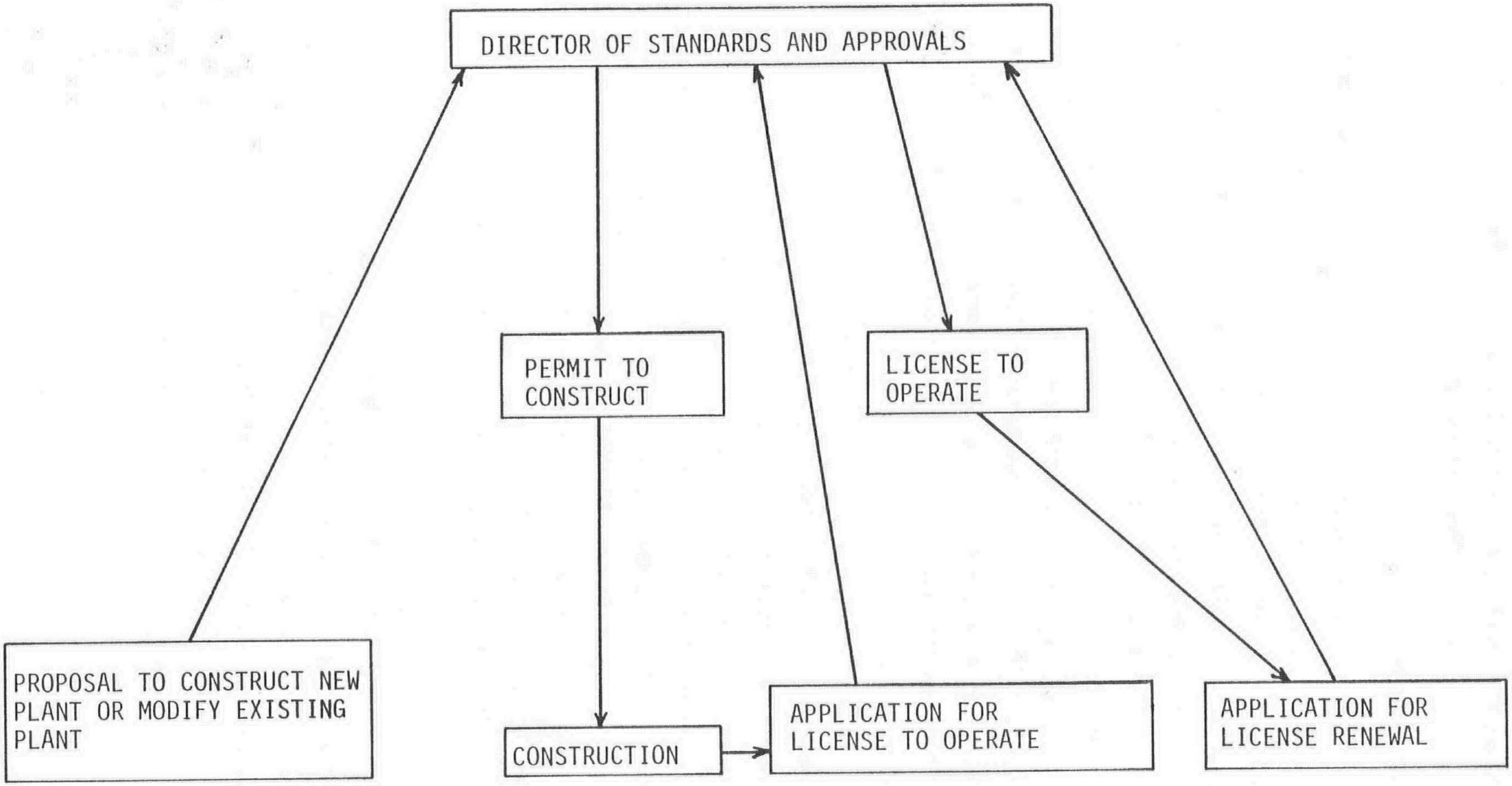

FIGURE 46 PROCESS FOR THE APPROVAL OF WASTE TREATMENT FACILITIES IN THE PROVINCE OF ALBERTA

days before construction is proposed to commence. The information required with the permit application typically consists of the following:

a) topography of the area,
b) detailed construction drawings and specifications,
c) material balance for all raw materials and finished products,
d) method of and frequency of wastewater monitoring.

In addition, the Director may request any supplementary information he deems appropriate, such as alternative plans and groundwater and soil conditions.

When the Construction Permit has been granted, and construction is completed, a licence must be obtained from the Director of Standards and Approvals before commencement of operation of the facility.

The application for a licence to operate must be made by the owner or his agent and should contain the following information:

1) the number of the permit to construct and any amendment(s) thereto,
2) details of change in original information supplied.

Licences to operate a facility are generally issued for a five-year period. The owner is required to apply to the Director of Standards and Approvals for a new licence at least 60 days before the licence expiry date.

British Columbia

Within the provisions of the Pollution Control Act, the Province of British Columbia operates on a pollution control permit system for wastewater discharges within its territorial jurisdiction. The permit application and review process is illustrated in Figure 47.

Establishments wishing to engage in operations which will result in the discharge of effluent or refuse, or the emission of contaminants directly to the environment are required to submit to the Director of Pollution Control an application for a Pollution Control permit. The application describes the type of operation, the source and location of the discharge, the quantity and quality of discharge, and the proposed treatment facilities.

Upon receipt of the application, the director circulates it to other government agencies who may have an interest in the discharge. Comments received from these agencies are taken into consideration during the processing of the application. Newspaper

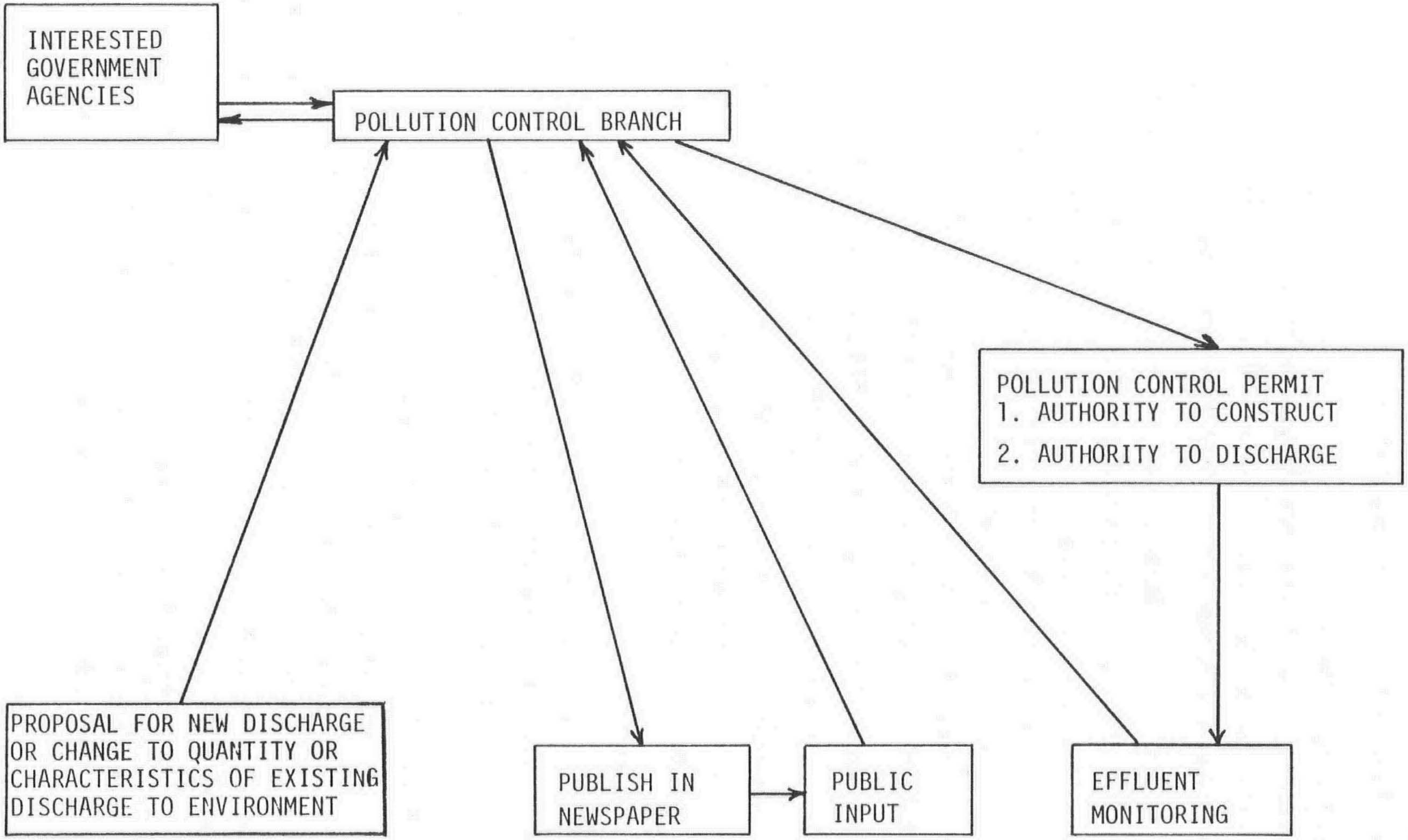

FIGURE 47 POLLUTION CONTROL PERMIT SYSTEM IN THE PROVINCE OF BRITISH COLUMBIA

publication of the application is typically required, to allow for input from the general public or other parties who may have questions about or objections to the discharge.

The above procedure is similar for existing operations within the province who may already be under permit and intend to expand their facilities. In this type of situation an Application for Amendment to Permit is submitted, describing the proposed changes to the operation and to the quantity and quality of the discharges.

During the processing of the application, information on the plant operation, the treatment and disposal facilities, receiving environment quality, etc., is obtained as required by means of site inspections, meetings, monitoring programs and development studies. A close liaison is generally maintained between the Pollution Control Branch Head, the Regional Offices, the applicant, and other government agencies during the processing of an application. Once it has been determined that:

i) all the applicable criteria of the Act and its Regulations have been met,
ii) the applicant's proposals (or those subsequently agreed upon) satisfy the objectives, and
iii) the director feels that the discharge will be acceptable with respect to the receiving environment,

a Pollution Control Permit may be issued for the discharge.

The Pollution Control Permit restricts the quantity and quality of the discharge and specifies what treatment works are required and the works installation schedule.

It should be noted that definitive objectives have not yet been established for all industries. Minimum requirements for discharges from these operations are determined on an individual basis. The permit, therefore, is in effect the authority to proceed with the construction of the authorized works (contingent upon approval of plans) <u>and</u> the authority to discharge (within the quantity and quality restrictions set out in the permit).

Normally, monitoring of the discharge is the responsibility of the permittee, while the receiving environment is monitored by the Pollution Control Branch. Although sampling and reporting frequency requirements are specified in the objectives, monitoring programs are generally established on an individual basis, depending on the nature of the discharge and with due regard to the receiving environment. The monitoring requirements are not necessarily restricted to the chemical and physical parameters, but usually include discharge quantity measurements.

Manitoba

In the Province of Manitoba, Section 14(1) of the Clean Environment Act outlines the route an industrial plant must follow in applying for permission to discharge contaminants to the environment. The approvals process is illustrated in Figure 48.

In accordance with Section 14(1) of the Clean Environment Act, an industrial plant must submit a proposal to the Clean Environment Commission outlining its proposed treatment program. The Commission reviews the application and advertises the plant's intentions in local newspapers. If opposition to the program is expressed, the Commission holds a public hearing. Following this hearing, and in consideration of the concerns expressed by groups and individuals, the Commission decides what limits to place on the pollutants to be discharged. A Clean Environment Commission Order which specifies these limits is then issued. The Clean Environment Commission does not regulate the construction of facilities but may in certain cases specify operating conditions in an Order.

New Brunswick

In New Brunswick, the Water Quality Regulation 76-154 under the Clean Environment Act (RSNB C-6) forms the basis for the approval of wastewater treatment facilites. The approvals process is illustrated in Figure 49.

An application for approval to construct a new treatment facility must be made on the required form to the Minister of the Environment 90 days prior to the desired commencement date. At the Minister's discretion, the application may then be published in local newspapers. Any objections raised to the application are ruled upon by the Minister, who then, with due consideration to the concerns expressed, may grant the approval to construct.

Upon construction of the treatment facility, an Interim Approval to operate is issued while the plant is tested and montiored. Monitoring requirements for the food industry generally include provision of information such as plant production rate, daily flow, BOD_5, SS, pH, and grease, although requirements vary with individual cases, depending on plant size, treatment requirements and plant location.

If the operation of the plant is found satisfactory in this interim period, an Approval to Operate is then granted.

Newfoundland

Section 26(1) of the Department of Provincial Affairs and Environment Act for the Province of Newfoundland and Labrador outlines the information requirements for issuance of an approval to construct or alter a wastewater treatment facility. The approvals process is illustrated in Figure 50.

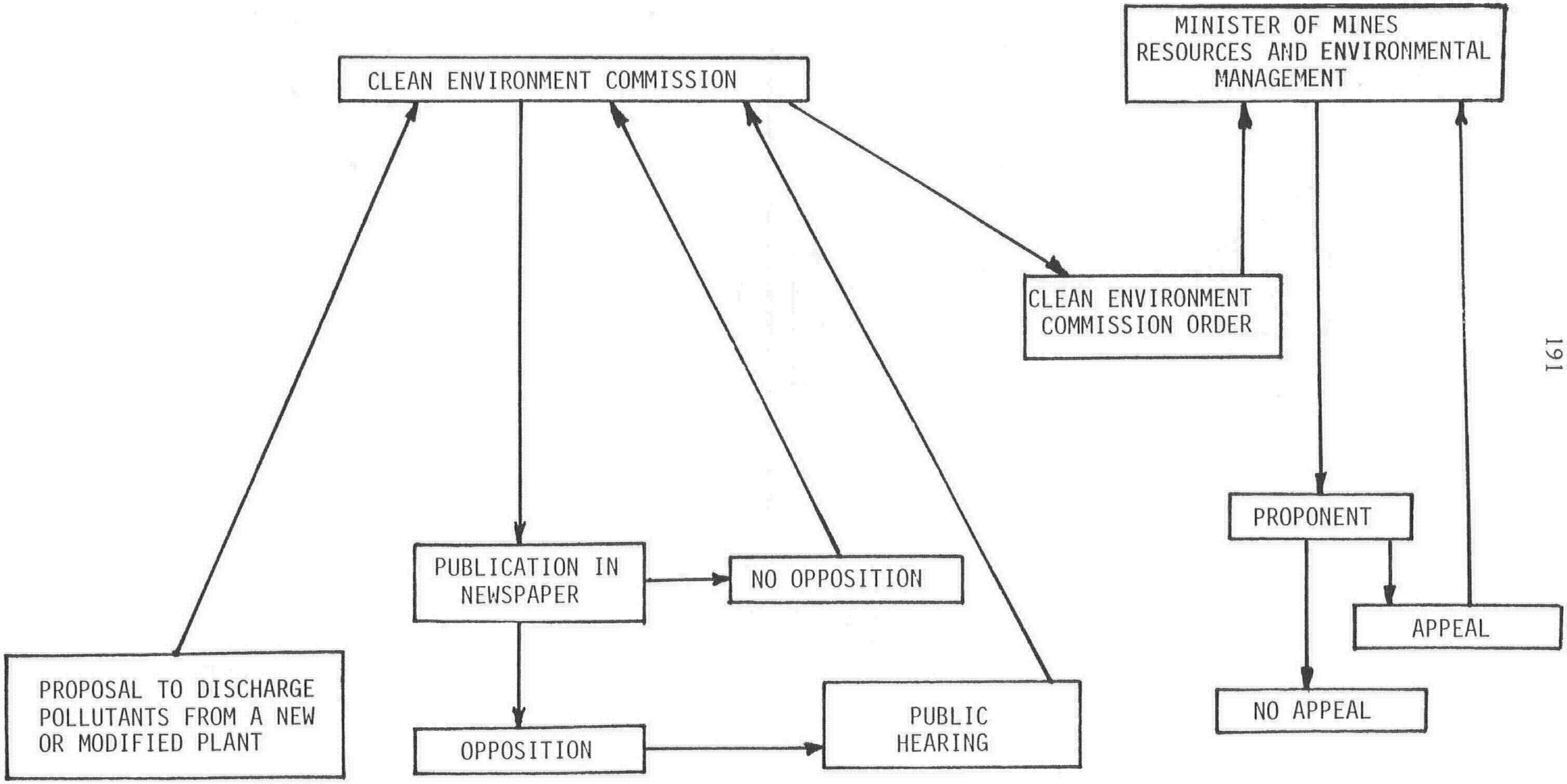

FIGURE 48 PROCESS FOR THE APPROVAL OF WASTE TREATMENT FACILITIES IN THE PROVINCE OF MANITOBA

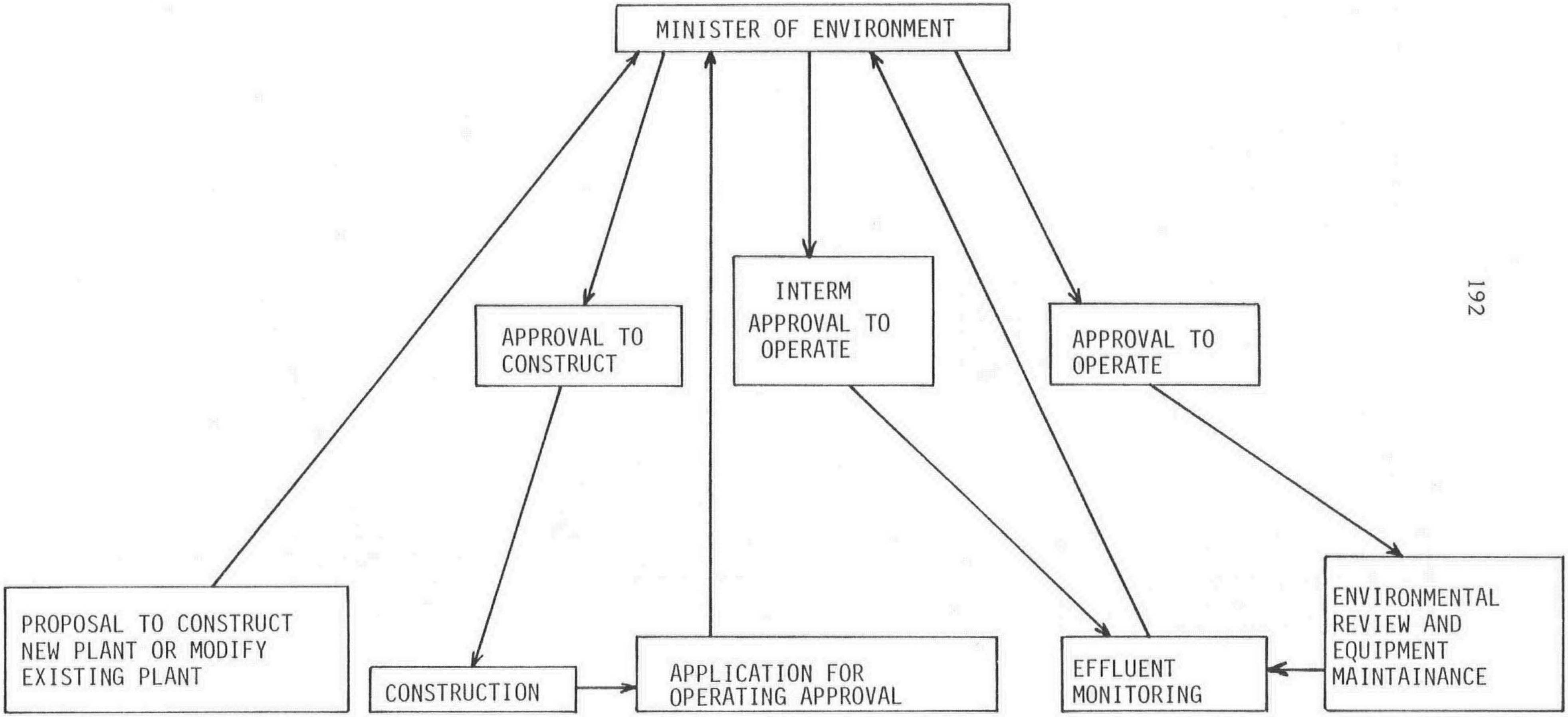

FIGURE 49 PROCESS FOR THE APPROVAL OF WASTE TREATMENT FACILITIES IN THE PROVINCE OF NEW BRUNSWICK

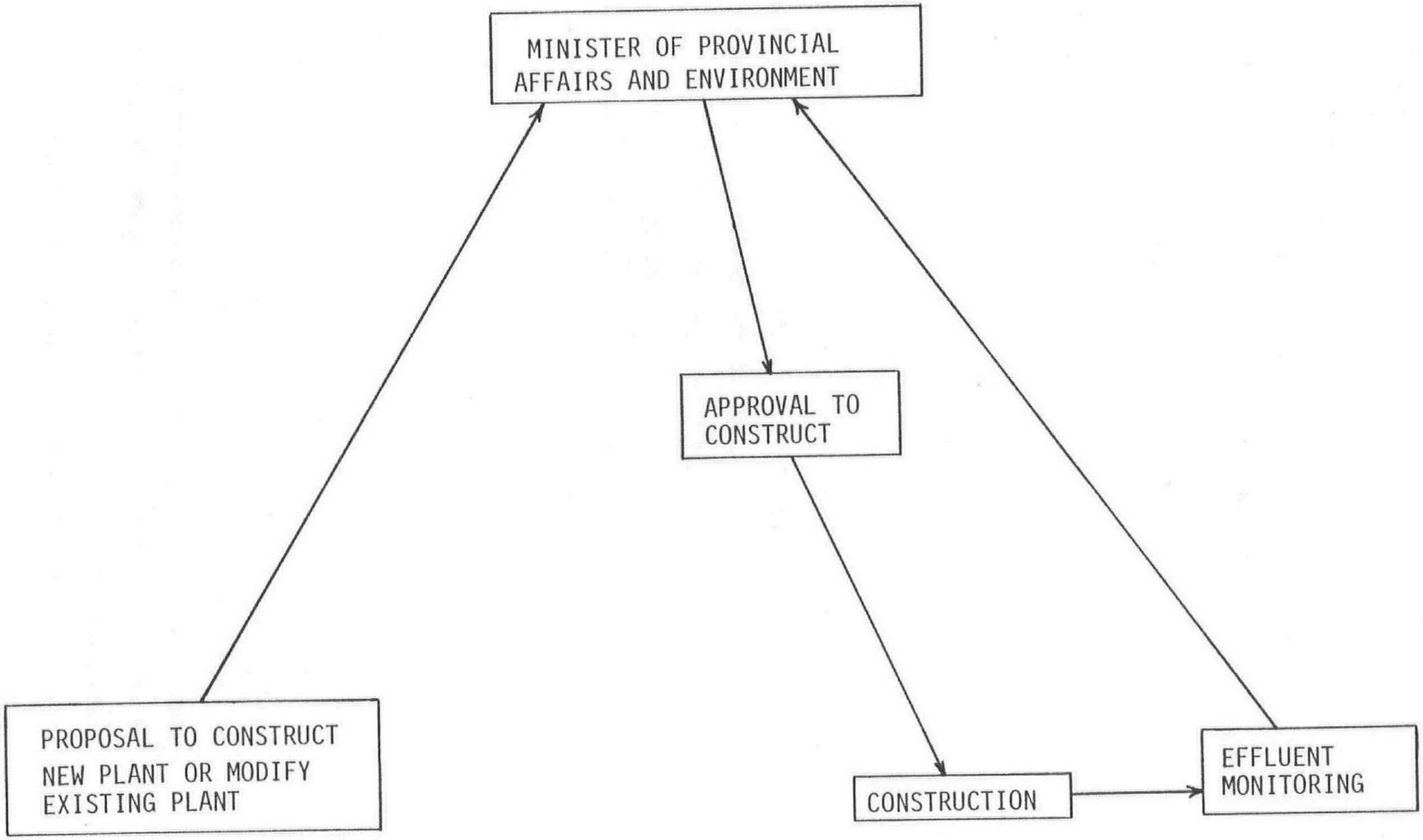

FIGURE 50 PROCESS FOR THE APPROVAL OF WASTE TREATMENT FACILITIES IN THE PROVINCE OF NEWFOUNDLAND

An engineer's report providing information such as the anticipated quality of the final effluent, names of companies and contacts where similar systems have been installed, location of the proposed discharge, possible downstream uses of water and plans and specifications of the proposed facility should be submitted to the Minister of Provincial Affairs and Environment with the required government application form. The Minister may then issue an Approval to Construct, with or without additional provisions and/or conditions.

After construction, the Minister may inspect or monitor the plant at his discretion to assess effluent quality and equipment repair.

It should be noted that if a plant is to draw water from a public supply then it must:

1) notify the area by publication, and
2) protect the source of the public water supply.

Nova Scotia

The approvals process for the construction or expansion of a wastewater treatment facility in the Province of Nova Scotia is outlined in the Water Act, and Chapter 6, Section 23, 25, 28, 29 and 30 of the Environmental Protection Act. The approvals process is illustrated in the flowsheet shown in Figure 51.

For existing operations, the Department of the Environment in cooperation with the Federal Department of the Environment, negotiate a compliance schedule for the installation of pollution abatement facilities necessary to comply with the requirements of the Act.

To apply for a construction permit, the applicant must submit the following with the required government application form:

a) a written description of the industrial process giving quality and quantities of wastewater,
b) variations in the flow of wastewater, including the maximum and average wastewater concentrations,
c) a layout sketch of the plant property,
d) engineering plans and drawings of the proposed works,
e) an engineers report indicating the anticipated degree of reduction of the pollution load, and
f) in some cases, and environmental impact statement.

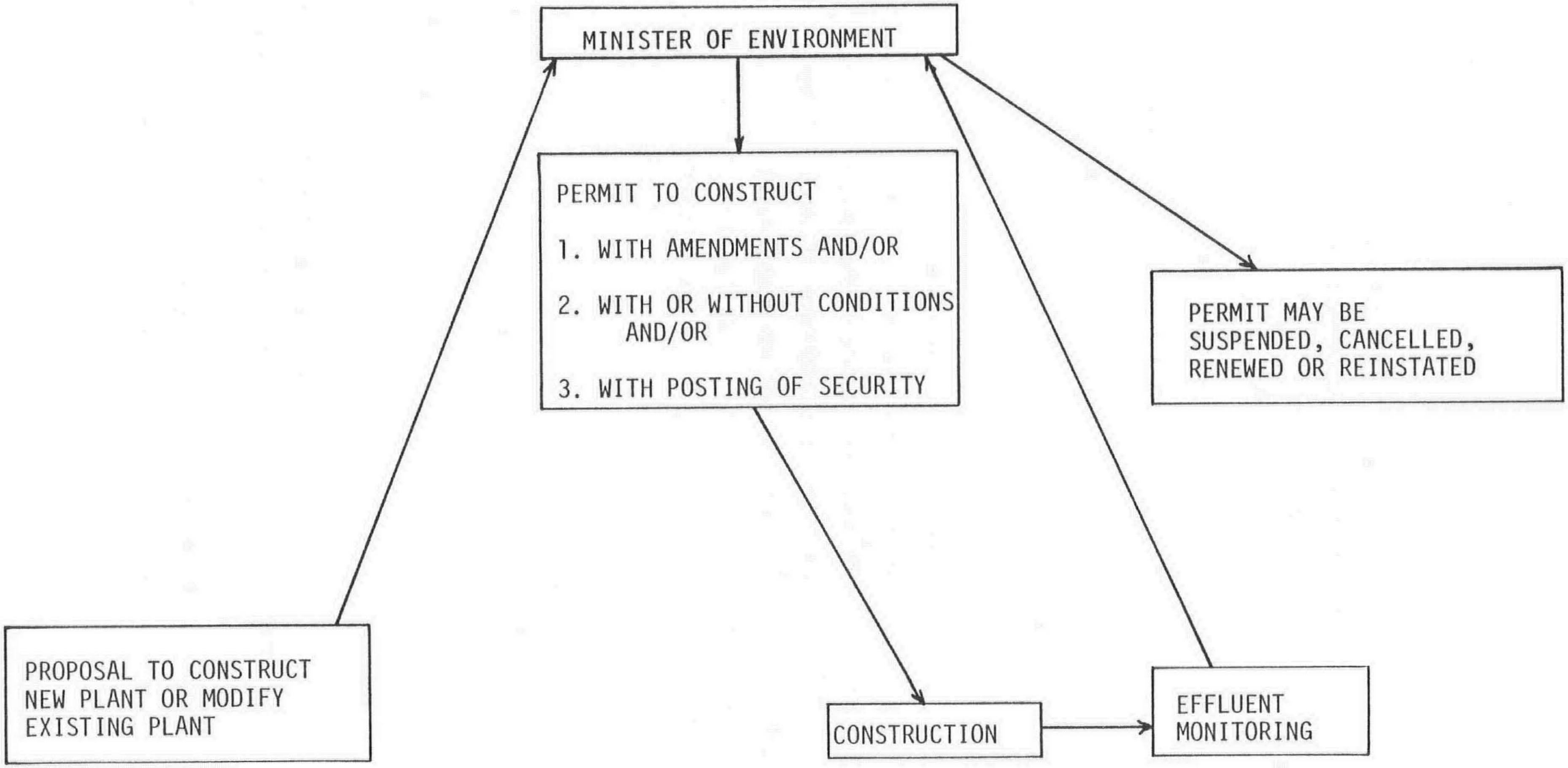

FIGURE 51 PROCESS FOR THE APPROVAL OF WASTE TREATMENT FACILTIES IN THE PROVINCE OF NOVA SCOTIA

Upon receipt and consideration of the above, and any other information he deems necessary, the Minister may

i) grant the required permit with or without conditions,
ii) amend the application and grant the permit,
iii) require the applicant to give security in the amount and form required by the Minister, or
iv) refuse to grant the permit.

In the case of a refusal the applicant has five days to refer the refusal to the Environmental Control Council, which will review the action and report its recommendations to the Minister. The Minister may then accept or reject the application. Once it has been issued, the Minister retains the authority to suspend or cancel the permit if any terms of the agreement are not met.

Ontario

Section 42 of the Ontario Water Resources Act states that an industrial operation wishing to construct facilities for the discharge of wastewater to a natural watercourse, storm sewer or upon the surface of the land, must make application to the Ministry of the Environment for a Certificate of Approval before the works are constructed. The application and review process is illustrated in Figure 52.

To obtain a Certificate of Approval, the plant personnel should first discuss their plans for a new or modified treatment facility with a District or Regional Industrial Abatement office. A formal application must then be submitted to the Industrial Approvals Section, which, in consultation with Regional Industrial Abatement personnel, assesses the technical aspects of the proposed facilities.

This formal application should contain the following information:

1) an application form supplied by the government,
2) a flow diagram and written description of the plant process,
3) details of water supply and waste disposal, including such aspects as quantity and quality of water used in specific processes, anticipated quantity and quality of wastewater and variation in flow rates expected.
4) engineering report on the design of the proposed wastewater treatment works,
5) physical layout of proposed facilities,
6) plans and profiles of the treatment units and surface sewers,

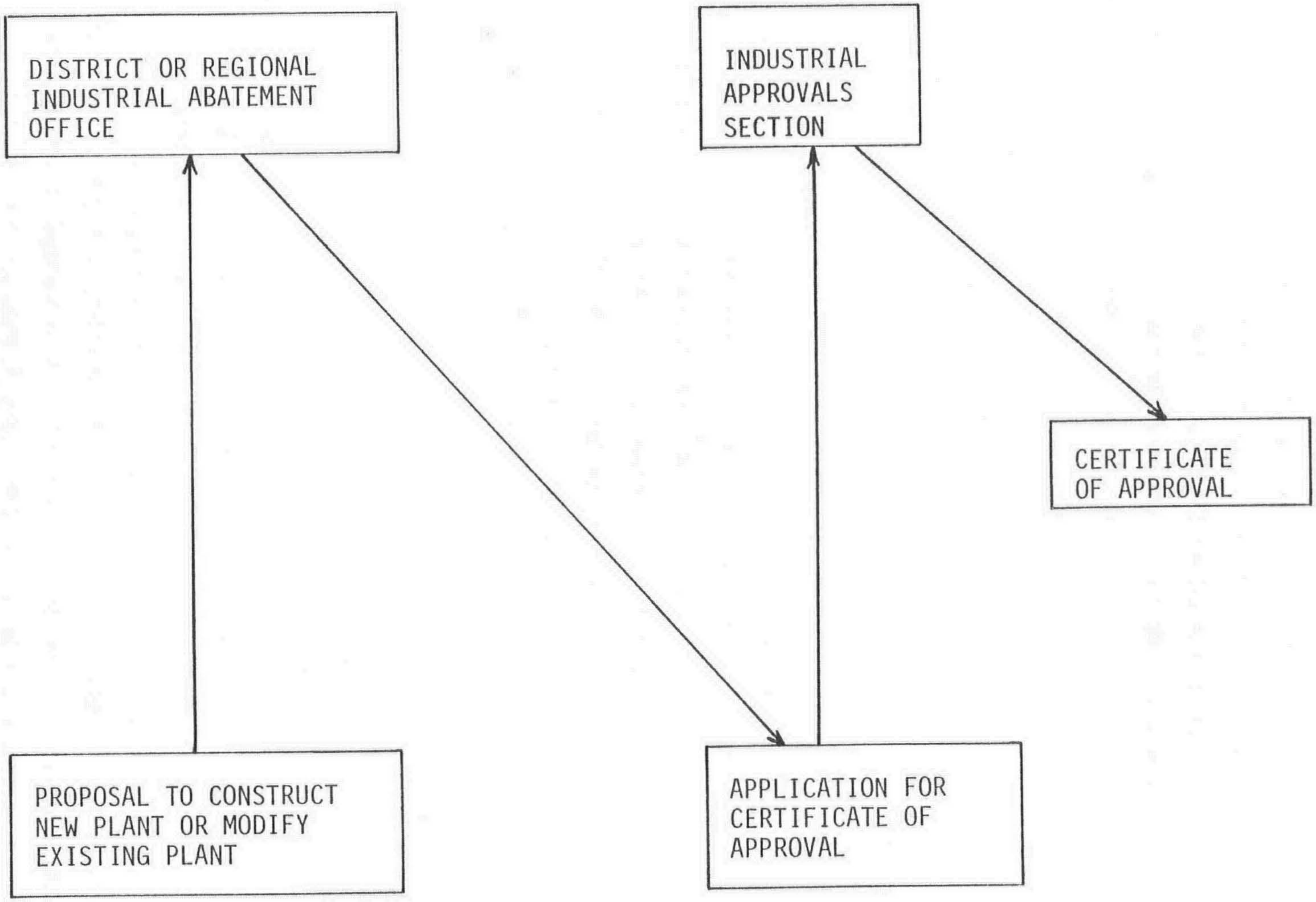

FIGURE 52 PROCESS FOR THE APPROVAL OF WASTE TREATMENT FACILITIES IN THE PROVINCE OF ONTARIO

7) company resume,
8) sources of composite waste streams,
9) proposed methods of handling non-standard (i.e., upset) conditions,
10) facts to support the selection of treatment equipment,
11) a flow diagram of wastewater treatment facilities,
12) operating manual for the proposed facilities, and
13) a schedule of the proposed effluents monitoring program including the points of sampling, frequency of sampling, and the parameters to be analyzed.

If it is concluded that the proposed treatment works will produce an effluent which will meet the Ministry's objectives for water quality, a Certificate of Approval is issued to the company.

Prince Edward Island

Section 15, Subsections (1) to (7) of the Prince Edward Island Environmental Protection Act outline the procedure for obtaining approval to construct a wastewater treatment facility. The procedure is illustrated in Figure 53.

The industrial establishment must submit, in conjunction with the government application form, an engineers report containing plans and specifications of the proposed wastewater treatment facilities. The Department of the Environment reviews the application and if satisfied with the proposal, issues a Certificate of Approval.

If the plant is located in a rural area, monitoring is deemed the responsibility of the Province, while if located on a municipal sewerage system, the municipality is responsible for effluent monitoring.

Quebec

The applications process for a Certificate of Authorization for the Province of Quebec may be found in the "General Regulation Respecting the Administration of the Environment Quality Act made under the Environment Quality Act", division three, Sections 4-6. The application and review procedure is illustrated in Figure 54.

The applicant must first submit the plans and specifications showing the exact location, equipment description, and anticipated quantity and quality of discharge to the municipality concerned. Once the municipality has forwarded to the applicant a certificate stating all municipal bylaws have been upheld, this, together with the following, are forwarded to the Environmental Protection Service office:

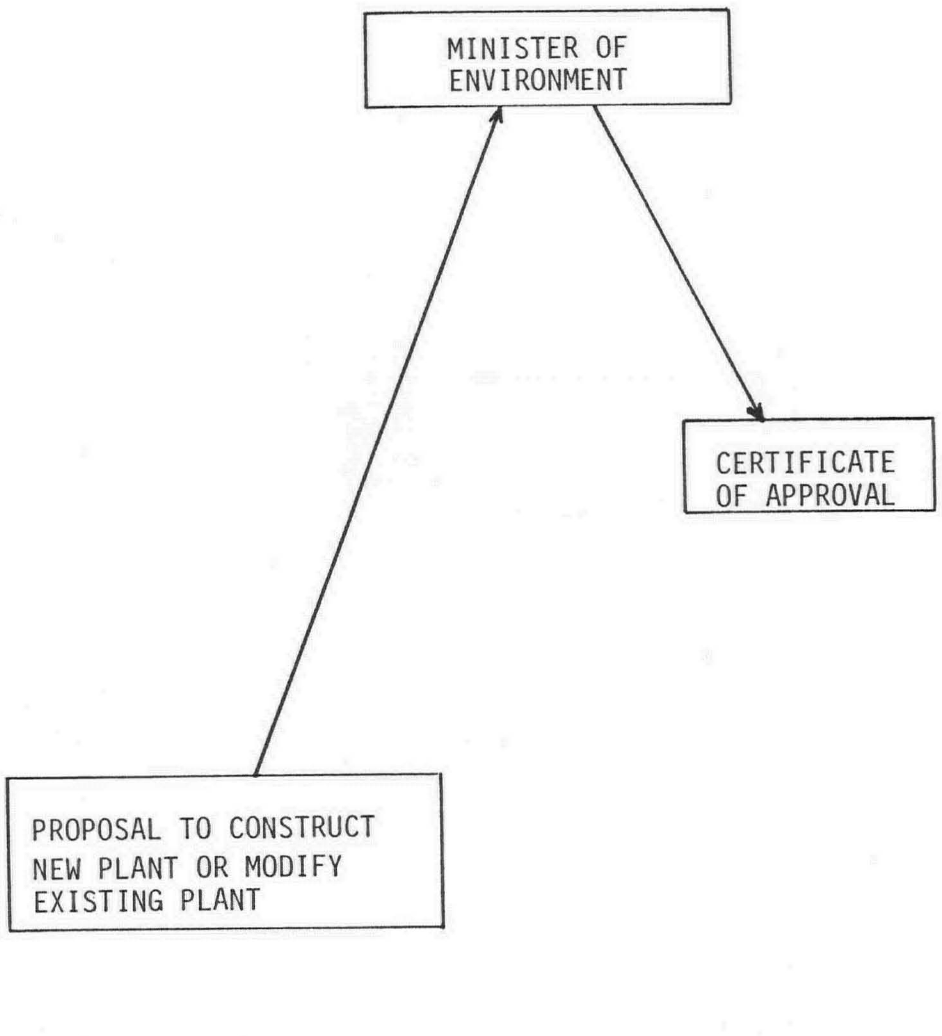

FIGURE 53 PROCESS FOR THE APPROVAL OF WASTE TREATMENT FACILITIES IN THE PROVINCE OF PRINCE EDWARD ISLAND

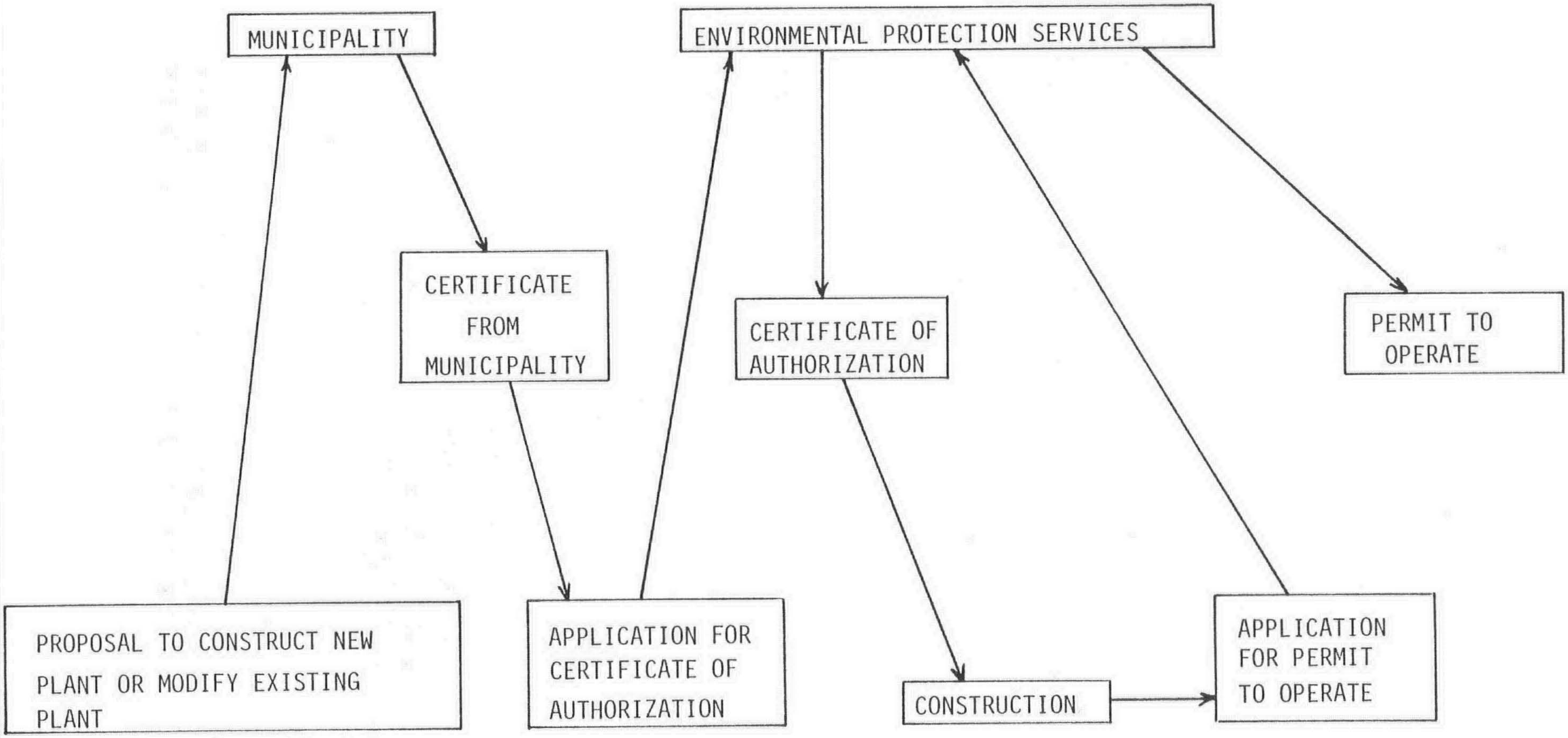

FIGURE 54 PROCESS FOR THE APPROVAL OF WASTE TREATMENT FACILITIES IN THE PROVINCE OF QUEBEC

1) complete name, address and phone number of applicant,
2) cadastral number of lots on which activity is to occur,
3) technical characteristics of project,
4) plan of grounds and peripheral area showing surface water, dwellings, etc.,
5) description (i.e., quantity and nature) of wastewater produced,
6) list showing:
    - all points of containment emission,
    - nature of contaminant emitted,
    - the concentration of contaminants, temperature, pH and volume with respect to discharge to water, and
7) volume of raw and finished product processed by the plant.

If all is found to be in order, an approval will be issued by the Environmental Protection Service. After construction, a permit to operate is given and must be renewed every five years.

Saskatchewan

In accordance with Section 11 of the Department of Environment Act, a project proposal for any new or significantly expanded operation in the Province of Saskatchewan should be submitted to the Environmental Assessment Secretariate, Saskatchewan Department of Environment. The Impact Assessment Review Panel of the Secretariate determines whether an environmental overview statement, a detailed environmental assessment or no environment assessment is required.

Then, in accordance with Sections 3, 4, 8 and 9 of the Water Pollution Control Regulations, the project proposal and the following must then be forwarded by the applicant to the Water Pollution Control Branch, Saskatchewan Department of Environment, for an Approval to Construct:

1) site plan,
2) plan and profile of proposed sewers,
3) description of sewer location,
4) plan and profile of pressure mains,
5) specifications,
6) plan indicating the location, topography, existing and proposed development, effluent discharge point, and existing drainage courses,

7) an outline of the proposed treatment facilities,
8) structural drawings,
9) cost estimates, and
10) any other data that commission may require.

If satisfied with the submission, the commission will grant an Approval for Construction. The complete application procedure is illustrated in Figure 55.

An operating approval is required prior to commencement of operation of the treatment system. This approval is issued for a specified term of no more than five years and is subject to various conditions. The conditions may specify final effluent quality criteria and monitoring requirements. Effluent quality requirements are based on the anticipated effect of the wastewater on the receiving body, taking into consideration Saskatchewan Water Quality Objectives. Monitoring parameters and frequencies reflect wastewater characteristics, variability and volumes.

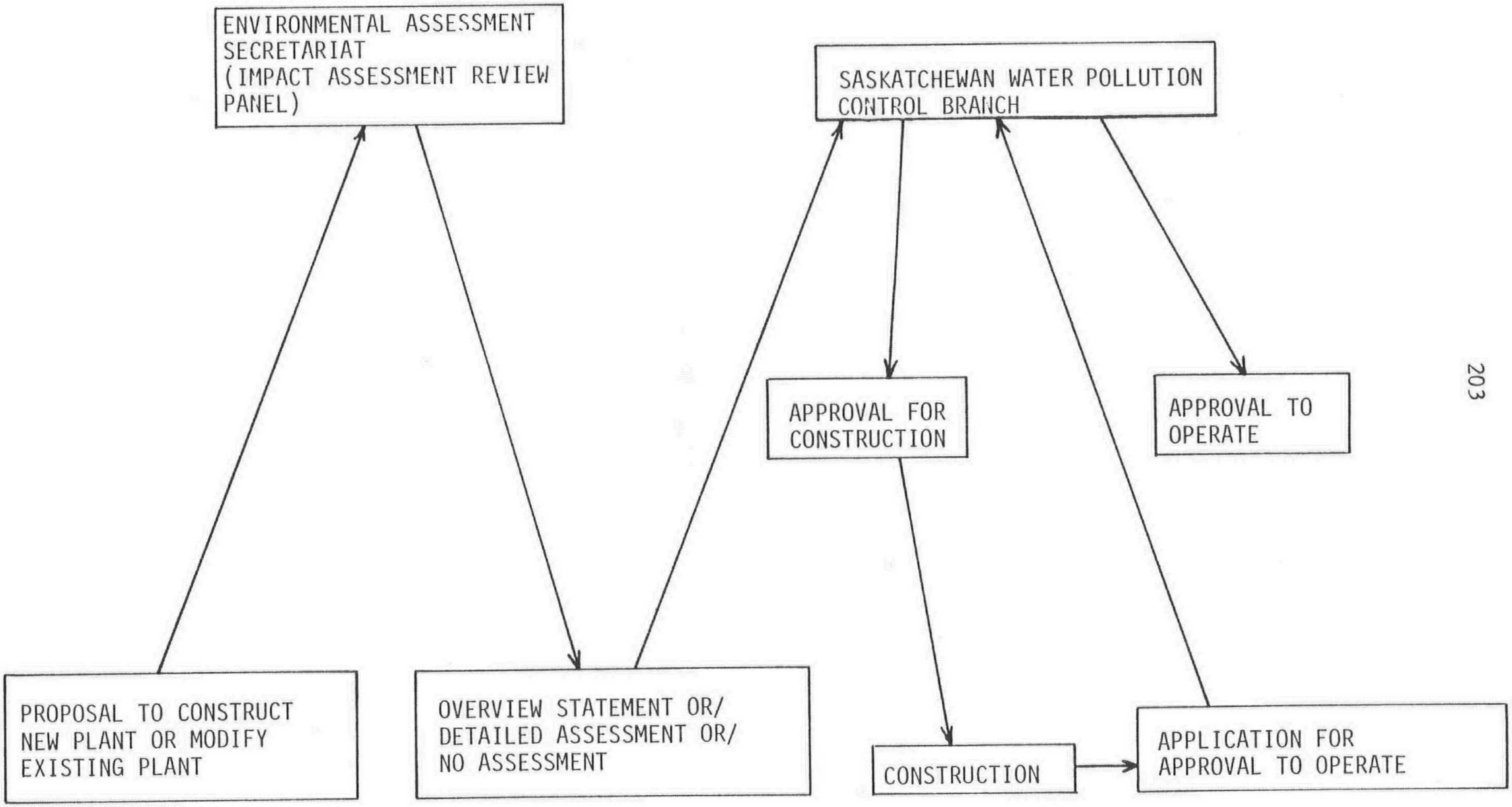

FIGURE 55 PROCESS FOR THE APPROVAL OF WASTE TREATMENT FACILITIES IN THE PROVINCE OF SASKATCHEWAN

APPENDIX II

GLOSSARY

APPENDIX II GLOSSARY*

Activated Sludge: Sludge floc produced in raw or settled wastewater by the growth of bacteria and other organisms in the presence of dissolved oxygen. It is through these microorganisms that the organics in the wastewater are decomposed to a simpler and more stable form.

Activated Sludge Process: A biological wastewater treatment process in which the wastewater is brought into contact with the activated sludge in an aeration tank. The sludge is subsequently separated from the mixed liquor by sedimentation and wasted or returned to the process as needed. The supernatant is discharged over the weir of the settling tank for disposal.

Aerated Lagoon: A large pond used to treat wastewater on a flow-through basis. The pond is supplied with oxygen by means of aerators which also provide mixing for the contents of the basin.

Aeration: The bringing about of intimate contact between air and water to promote the absorption of oxygen by the liquid. This may be accomplished by bubbling air through the water or mechanically agitiating the liquid causing it to be sprayed in the air.

Aeration Tank: The tank where the wastewater is mixed with return sludge and aerated in an activated sludge process.

Aerobic: A conditon characterized by the presence of free or dissolved oxygen. Organisms which can only survive and/or function in such an environment are referred to as strict or obligate aerobes.

Alkalinity: The capacity of water to neutralize acids; a property imparted by the water's content of carbonate, bicarbonates and hydroxides. It is expressed in milligrams per litre of equivalent calcium carbonate.

---

*Environment Canada, Evironmental Protection Service, Design and Selection of Small Wastewater Treatment Systems - A Short Course, Ottawa, 1977.

U.S. Environmental Protection Agency, Development Document for the Proposed Effluent Limitations Guidelines and New Source Performance Standards for the Citrus, Apple and Potato Segment of the Canned and Preserved Fruits and Vegetables Processing Point Source Category, 1973.

Anaerobic: A condition characterized by the absence of free or dissolved oxygen. Organisms which can only survive and/or function in such an environment are referred to as strict or obligate anaerobes.

Assimilative Capacity: The capacity of a natural body of water to receive wastewaters, without deleterious effects to aquatic life or human activities.

Auto-oxidation: The process in which microorganisms consume their own cellular material due to the depletion of their food source.

Biochemical Oxygen Demand (BOD): The quantity of oxygen used in the oxidation of organic matter by microorganisms in a specified time, at a specified temperature, and under specified conditons. The test used in measuring the biodegradable organic components in a wastewater is generally conducted at 20°C for a five-day duration and is referred to as the BOD_5.

Biodegradable: The capability of being broken down or decomposed by microorganisms to a more stable chemical form.

Biological Oxidation: The process whereby, through the activity of living organisms in an aerobic environment, organic matter is converted to a more biologically stable matter.

Biological Stabilization: Reduction in the net energy level of organic matter as a result of the activity of organisms, so that further biodegradation is very slow.

Biological Treatment: Organic wastewater treatment in which bacteria and/or biochemical action are intensified under controlled conditions.

Buffering Capacity: The capability of a water or wastewater to resist a change in pH. The primary buffering capacity of a waste is related to carbon dioxide, bicarbonate and carbon equilibria.

Bulking Sludge: Sludge floc having a low density which settles poorly.

Carbohydrates: A group of organic compounds, particularly sugars and starches which are readily biodegradable.

Centrifuge: A mechanical device in which centrifugal force is used to separate solids from liquids.

Chemical Oxygen Demand (COD): A measure of the oxygen-consuming capacity of wastewater. It is expressed as the amount of oxygen consumed from a chemical oxidant in a specific test. It does not differentiate between organic and inorganic matter and thus does not necessarily correlate with biochemical oxygen demand.

Clarification: The action of reducing the concentration of suspended matter in a liquid.

Clarifier: A settling basin for separating settleable solids from water or wastewater.

Coliform Bacteria: A group of bacteria predominantly inhabiting the intestines of man or animal, but also occasionally found elsewhere. Their presence in water is presumptive evidence of contamination by fecal material.

Colloids: Finely divided solids which will not settle due to electrical charges on the particles.

Composite Wastewater Sample: A combination of individual samples of wastewater taken at selected time intervals, to minimize the effect of the variability of the individual samples. Individual samples may be of equal volume or may be proportioned to the flow at time of sampling.

Declining Growth Phase: The stage of growth of microorganisms at which the depletion of the food supply results in a reduced rate of microbial growth and cell multiplication.

Denitrification: The conversion of nitrate to molecular nitrogen by specific microorganisms under aerobic conditions.

Detention Time: The theoretical length of time required for a given volume of liquid to flow through a tank or unit. It is calculated by dividing the tank volume by the rate of flow. Also called retention time.

Diffused Air Aeration: A method of introducing oxygen into a wastewater by means of forcing air under pressure through a number of porous plates, tubes or other devices causing it to be divided into small bubbles for diffusion in the liquid.

Digestion: Refers to either the aerobic or anaerobic breakdown of organic matter, particularly in sludge, to simpler, more biologically stable compounds.

Disinfection: The destruction of potentially harmful or disease-causing bacteria in water or wastewater by any number of methods, eg., chlorination, ozonation, ultra violet radiation.

Dispersed Growth: Non-flocculating microorganisms with poor settling characteristics whose presence in treated wastewater results in a turbid effluent.

Dissolved Oxygen (DO): The amount of oxygen dissolved in a liquid, usually expressed in milligrams per litre, parts per million (ppm) or percent of saturation. Dissolved oxygen is necessary for fish and other aquatic organisms.

Dissolved Solids (Total): The total amount of dissolved material, organic and inorganic, contained in water or wastes.

Effluent: Wastewater partially or completely treated, or in its natural state, flowing out of a reservoir, basin, treatment plant or part thereof.

Endogenous Growth Phase: The stage of growth of microorganisms at which they consume their own cellular material due to the depletion of their food source.

ENR Construction Cost Index: An index value published weekly by Engineering News Record magazine, designed to measure the effects of wage rate and material price trends on construction cost. The relative values of current and past index values can be used to estimate the present day cost of constructing a facility whose original construction cost and date of construction are known.

Eutrophication: The natural aging process by which a lake evolves into a marsh and ultimately becomes unsuitable for human activites and aquatic life. In the course of this process the lake becomes overly rich in dissolved nutrients (for example, nitrogen and phosphorus), so that an excessive development of algae results, the water becomes murky, and noxious odours and unsightly scum appear. In the lower layers dissolved oxygen levels become depressed, and bottom-dwelling life changes from clean water forms to pollution tolerant forms. The rate at which this aging process occurs is accelerated by the deposition of nutrients into the water course.

Extended Aeration Process: A modification of the conventional activated sludge process in which longer detention times in the aeration basin and lower organic loading rates are utilized. The extended aeration process operates in the endogenous phase of the microbial growth curve.

Facultative Bacteria: Bacteria that can grow under aerobic or anaerobic conditions.

Fat, Oil and Grease (FOG): A collective name for that material extracted by a solvent from an acidified sample in a specific test, including hydrocarbons, fatty acids, soaps, fats, waxes and oils.

Filamentous Microorganisms: Those microorganisms, particularly fungi and some bacteria which grow in the form of strands or filaments.

Fixed Film Process: A biological process, such as a trickling filter or rotating biological contactor, which utilizes a microbial population attached to a solid surface to remove organics from the wastewater.

Floc: A mass of solids formed by the agglomeration of fine suspended material into large particles that are more readily separated from the liquid.

Flotation: A process for removal of suspended material from a liquid. Fine bubbles are generated which attach to the suspended matter causing it to rise to the surface of the liquid as a scum in a tank. The scum is subsequently removed from the tank by skimming.

Food to Microorganism Ratio (F/M): The weight ratio of BOD (food) in wastewater to suspended solids (microogranisms) in a biological treatment system. This value is used as an operational control parameter for activated sludge processes.

Flow Equalization: The practice of dampening the variations in flow rate which occur in many wastewater streams. This is frequently accomplished by accumulating all wastewater flows above the average or equalized flow in a storage basin and releasing this liquid when the incoming flow rate falls below this average value.

Grab Wastewater Sample: A single, independent wastewater sample taken at some instant in time. A composite sample is made up of numerous grab samples.

Grit: The heavy inorganic particles occurring in a wastewater such as sand, gravel and soil.

High Rate Systems: A relative term applied to those wastewater treatment systems which are organically loaded at a rate significantly in excess of that normally used for the conventional process. High rate systems are generally suitable only as roughing units.

Hydraulic Loading Rate: A measure of the volume of wastewater applied to a treatment system.

Influent: Water, wastewater or other liquid flowing into a reservoir, basin, or treatment plant or any unit thereof.

Kjeldahl Nitrogen: A measure of the total amount of nitrogen in the ammonia and organic forms in a wastewater.

Lagoon: An artificial pond of earthen construction used to hold wastewater for treatment by means of biological stabilization.

Loading Rate: The quantity of waste, expressed in units of volume (hydraulic load) or in mass of BOD, COD, suspended or volatile solids (organic load) which is discharged to a wastewater treatment facility or water course.

Logarithmic Growth Phase: The stage of microbial growth in which maximum cell growth and multiplication is taking place due to the presence of an abundant food supply.

Mean Cell Residence Time: A measure of the average retention time of solids in activiated sludge system. It is calculated by dividing the mass of solids in the aeration tank by the sludge wasting rate (mass/day). It is also referred to as sludge age and solids retention time.

Mesophiles: Bacteria that grow best at moderate temperature, having an optimum of 20° to 40°C.

Microbial: Pertaining to the activity of microorganisms.

Milk Equivalent: A term used to relate the actual production of various commodities in the dairy industry to a common denominator, that being raw milk received at the plant. A standard set of conversion figures for translating actual product into milk equivalents received is given in Table II-1.

Mixed Liquor: A mixture of sludge and wastewater undergoing activated sludge treatment in the aeration tank.

Mixed Liquor Suspended Solids (MLSS): A measure of the quantity of suspended solids contained in the mixed liquor of an activated sludge treatment plant.

Mixed Liquor Volatile Suspended Solids (MLVSS): A measure of the quantity of organic solids contained in the mixed liquor of an activated sludge treatment system.

Nitrification: The process of oxidizing ammonia by bacteria into nitrites and nitrates.

Nutrient: Elements or chemical compounds absorbed by living organisms and used in synthesis of cellular material. The major nutrients include carbon, hydrogen, oxygen, nitrogen, sulphur and phosphorus. Nitrogen and phosphorus are of major concern because they are frequently deficient in food processing wastewaters.

Organic Loading Rate: A measure of the rate at which organic food (BOD) is applied to a wastewater treatment process or water course.

Overflow Rate: A measure of the hydraulic loading rate of clarifier tanks, expressed in terms of volume rate of flow per unit of tank surface area. A primary parameter for the design of settling tanks. Also referred to as surface loading.

Oxidation Process (treatment): Any method of wastewater treatment for the aerobic breakdown of the putrescible organic matter. Living organisms in the presence of oxygen convert the organic matter into a more stable or mineral form.

Oxidation Ditch Process: A modification of the extended aeration process in which a ditch or channel forms the aeration basin. Mixed liquor is circulated and aerated in the ditch by means of a cage rotor.

Pathogenic Organisms: Microorganisms that can transmit disease.

pH: A term used to express the intensity of the acid or alkaline condition of a solution.

Photosynthesis: A process occurring in living plants in which carbon dioxide and inorganic substances are converted into oxygen and carbohydrates with the aid of chlorophyl, utilizing sunlight for energy.

Pin-Point Floc: A floc consisting of very small particles with poor settling characteristics. It is usually indicative of over aeration and/or under loading of an activated sludge process.

Present-Value Analysis: A method of economic analysis in which annual operating and maintenance costs are multiplied by a present worth factor and added to the capital cost to get a total present worth value.

Primary Waste Treatment: In-plant and byproduct recovery and wastewater treatment involving physical separation and recovery processes such as grit chambers, screening, flotation and clarification.

Proportional Composite Sample: A combination of individual samples of wastewater taken at selected intervals and in proportion to the flow at time of sampling.

Psychrophiles: Bacteria that grow best at relatively low temperatures, having an optimum of 10° to 20° C.

Pure Oxygen Activated Sludge Process: A modification of the conventional activated sludge process, in which purified oxygen is added to the mixed liquor instead of air.

Receiving Body (Water): A natural watercourse, lake or ocean into which treated or untreated wastewater is discharged.

Rising Sludge: A condition which can occur in secondary clarifiers in which denitrification of stale sludge leads to the formation of nitrogen gas bubbles. These attach themselves to the sludge mass, causing it to become buoyant and float to the surface of the clarifier.

Rotating Biological Contactor (RBC) Process: A fixed film waste treatment process in which the microorganisms responsible for breakdown of the organic material in the waste adhere to the surface of a series of closely spaced plactic discs mounted on a horizontal shaft. The shaft rotates bringing the microorganisms into alternate contact with the wastewater and the air.

Screening: The removal of relatively coarse floating and suspended solids from wastewater by straining through grates and screens.

Secondary Waste Treatment: The wastewater treatment processes following primary treatment, typically involving biological waste stabilization.

Sedimentation: The process of allowing solids in the liquid to sink to the bottom for easy removal. Also called settling or clarification.

Settleable Solids: Those solids in wastewater which settle to the bottom of a sedimentation tank. Also referred to as the volume of solids that settle to the bottom of an Imhoff cone in one hour.

Sloughing: A phenomenon associated with fixed film biological treatment processes where biological solids build up to a varying degree and then slough off into the discharge flow.

Sludge: Settled solids produced by wastewater treatment.

Sludge Age: Synonymous with mean cell residence time.

Sludge Blanket: The layer of sludge formed in a sedimentation tank.

Sludge Bulking: Sludge occupying excessive volumes and having poor settling characteristics.

Sludge Conditioning: Treatment of sludge to improve its dewatering characteristics and enhance drainability, usually by the addition of chemicals.

Sludge Digestion: The process by which organic matter in the sludge is converted into more stable compounds through the activities of either anaerobic or aerobic organisms.

Sludge Treatment: The processes used to remove water and/or to reduce the organic components in the sludge.

Sludge Volume Index (SVI): The volume in millilitres occupied by one gram of sludge after 30 minutes of settling.

Solids Loading: An important design parameter for settling tanks which measures the mass of solids applied per unit surface area of the tank.

Sparger: An air diffuser designed to give large bubbles, used independently or in combination with mechanical aeration devices.

Substrate: The substances (food) used by organisms for the growth (synthesis) of new cellular material and the production of energy (respiration).

Supernatant: The liquid overlying deposited solids. Also the liquid in a sludge-digestion tank that lies between sludge at the bottom and floating scum at the top.

Surface Aeration: A method of introducing air into a wastewater by means of mechanically agitating the liquid and causing it to be sprayed in the air. Also referred to as mechanical aeration.

Suspended Growth Process: A biological treatment process such as the activated sludge process, in which the microbial population is kept in suspension by compressed air or mechanical methods.

Suspended Solids (SS): Solids that either float on the surface, or are in suspension in liquids, and which are largely removable by laboratory filtering.

Thermophiles: Bacteria that grow best at relatively high temperatures, having an optimum of $45^{o}C$ or higher.

Toxicity: Inhibition of microbial activity due to a poisoning effect on the microorganisms or interference with intracellular or extracellular reaction. Also a measure of the lethality of an effluent to a species of test fish.

Treatment Efficiency: A measure of the amount of a specific pollutant, usually BOD_5 or suspended solids, removed by waste treatment process, usually expressed in percentage removal.

Trickling Filter: An aerobic, fixed film wastewater treatment process which consists of a bed of highly permeable media to which microorganisms are attached and through which the wastewater is percolated.

Vacuum Filter: A filter consisting of a cylindrical drum mounted on a horizontal axis, covered with a filter cloth, and revolving with a partial submergence in liquid. A vacuum is maintained under the cloth for the larger part of a revolution to extract moisture. The cake is scraped off continouusly.

Volatile Acids: Fatty acids containing six or less carbon atoms, which are soluble in water and which can be steam-distilled at atmospheric pressure. Volatile acids are commonly reported as equivalent to acetic acid, and are an intermediate product in the anaerobic digestion process.

Volatile Solids: That fraction of the solids occurring in wastewater which are organic in nature.

Volumetric Loading Rate: A measure of the mass of organic food (BOD_5) applied to a wastewater treatment system per unit volume of aeration tank capacity.

Waste Stabilization Basin (Pond): Synonymous with lagoon.

TABLE II-1 MILK EQUIVALENT RATIOS*

One kilogram of product	Milk equivalents in kilograms
Butter	21.3
Whole Milk Cheese	9.9
Evaporated Milk	2.1
Condensed Milk	2.4
Whole Milk Powder	13.5
Cottage Cheese	7.12
Non-fat Dry Milk	12.5
Whey 1.1	
Dry Whey	17.6
Whey Cream Butter	40.7
Dry Butter Milk	249.0
Ice Cream**	2.67

* Bissett, W.E., Preliminary Discussion Paper on Environmental Controls for the Canadian Dairy Products Industry, 1976.

** One litre of ice cream weighs 0.54 kg.