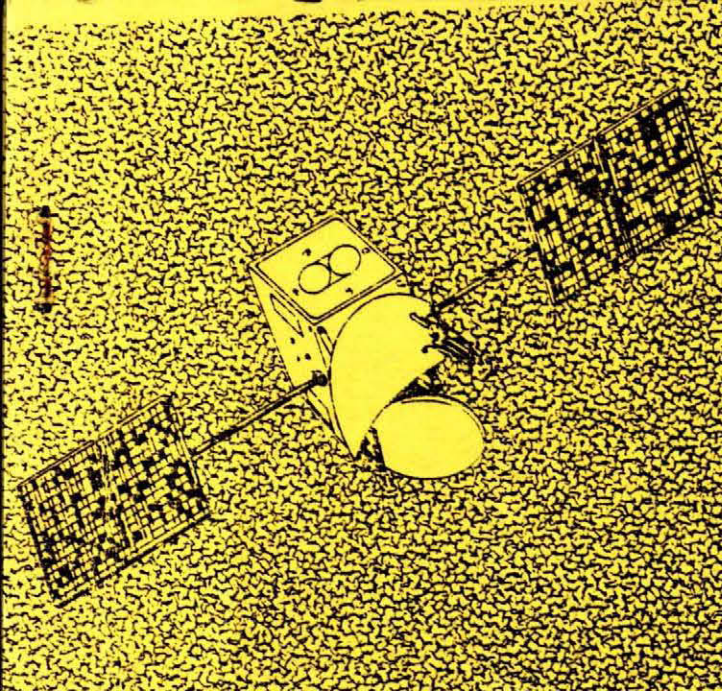

93.

ANIK-B INFORMATION EXCHANGE MEETING
HELD IN
OTTAWA
25-26 OCTOBER, 1977

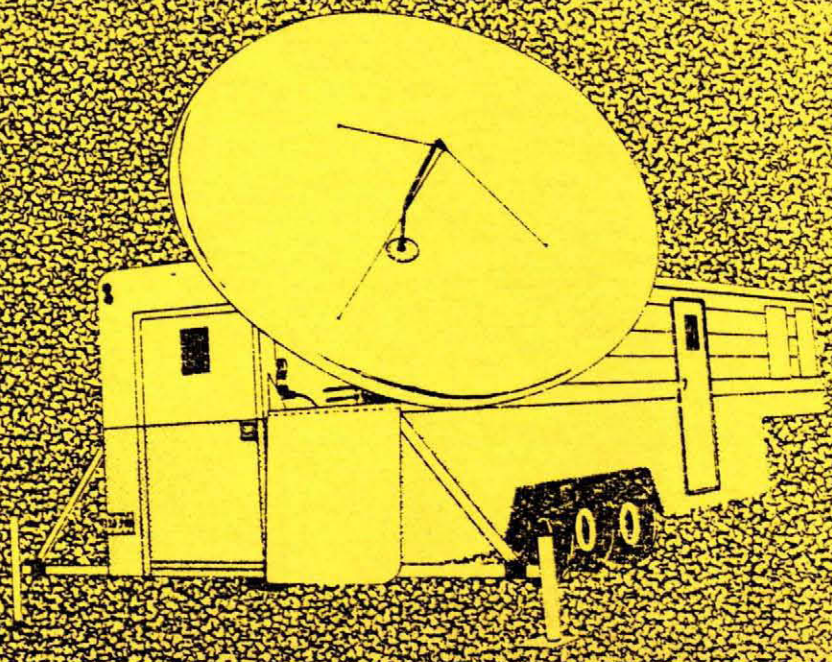

LKC
TK
5104.2
.A5
A6354
1977
c.2

TABLE OF CONTENTS

		Page
AGENDA		2
OPENING REMARKS	- A. LAPOINTE ACTING DEPUTY MINISTER	4
ANIK-B PROGRAM OBJECTIVES	- DR. J.H. CHAPMAN ASST. DEPUTY MINISTER SPACE PROGRAM	5
PROGRAM MANAGER'S REMARKS	- M.V. PATRIARCHE	15
OBJECTIVES AND PROCEDURES	- N.G. DAVIES	23
ANIK-B SYSTEM CAPABILITIES AND CONSTRAINTS	- J.W.B. DAY	26
FORMATION OF DISCUSSION GROUPS	- N.G. DAVIES	36
DISCUSSION GROUP CHAIRMEN REPORTS	- DISCUSSION CHAIRMEN	39
COMMENTS ON REPORTS OF DISCUSSION GROUPS	- N.G. DAVIES	60
PROJECT IMPLEMENTATION PROCESSES	- PROGRAM AND PROJECT STAFF	64
SUMMARY OF MEETING RESULTS	- N.G. DAVIES	77
PROGRAM ACTION PLANS	- M.V. PATRIARCHE	78
CLOSING REMARKS	- N.G. DAVIES	80
LIST OF PARTICIPANTS AND ADDRESSES		81

Industry Canada
Library - Queen
JUL 12 2013
Industrie Canada
Bibliothèque - Queen

COMMUNICATIONS CANADA
CRC
AVR 5 1991
LIBRARY - BIBLIOTHÈQUE

ANIK B COMMUNICATIONS PROGRAM

INFORMATION EXCHANGE

OTTAWA, 25-26 OCTOBER 1977

PLANNED AGENDA

25 October 1977

Chairman - N.G. Davies, Project Director, Communications Research Centre

0830 - 0900	-	Registration, coffee
0900 - 0910	-	Welcoming remarks - Deputy Minister
0910 - 0935	-	ANIK B Program Objectives - J.H. Chapman, Assistant Deputy Minister Space Program
0935 - 0940	-	Guest introductions - Chairman
0940 - 1000	-	ANIK B Program organization. M.V. Patriarche, Program Manager, ANIK B Communications Program
1000 - 1015	-	Information Exchange - objectives & procedures - Chairman
1015 - 1045	-	Coffee
1045 - 1115	-	Discussion of ANIK B system capabilities and constraints - J.W.B. Day, Project Manager, ANIK B Communication Systems Engineering
1115 - 1130	-	Formation of discussion groups - Chairman
1130 - 1215	-	Discussion groups (concurrent sessions - DOC animateur; chairman/rapporteur from group)
1215 - 1415	-	Lunch break
1415 - 1645	-	Discussion groups (concurrent sessions - continuation)
1530 - 1600	-	Coffee
1645 - 1730	-	Plenary Session - Reports by discussion groups - Chairman
1800 - 2000	-	Reception

DD 10615627
TK 5104.2 DL 10619381
A5
A6384
1977

26 October 1977

Chairman - N.G. Davies

0830 - 0900	-	Coffee
0900 - 0930	-	Plenary Session - Comments on reports of discussion groups - Chairman
0930 - 1030	-	Plenary Session - Discussion of project implementation processes - Chairman, plus Program and Project Staff (Proposal Format, Plan, Pilot Project Organization - W.T. Kerr; Scheduling - D.H. Jelly; Technical Factors - J.W.B. Day; Methodology of Users' Project Design and Evaluation - A. Casey-Stahmer; Selection Process, DOC Role in Program - M.V. Patriarche)
1030 - 1100	-	Coffee
1100 - 1130	-	Discussion of project implementation (continuation)
1130 - 1200	-	Summary of Information Exchange meeting results - Chairman
1200 - 1215	-	Program action plans - M.V. Patriarche
1215 - 1230	-	Closing remarks - Chairman
1230 - 1430	-	Lunch break
1430 - 1730	-	(Optional) Open Discussion. DOC staff will be available for consultation.

ANIK-B INFORMATION EXCHANGE

OPENING REMARKS

BY

ACTING DEPUTY MINISTER A. LAPOINTE

1. Welcome to representatives

- other federal departments
- the provinces
- the territories
- universities
- native associations
- the carriers
- broadcasting undertakings and others.

2. We hope that the pilot projects on ANIK-B will be carried out in the same spirit of cooperation between the provincial and federal governments which marked the HERMES experimental program. In a project like ANIK-B we must ensure that expectations raised are realistic, and that governments will be able to deal with them after the testing stage is terminated. For this reason, we are seeking advice from you, the user agencies, to ensure that we understand your needs, and that the program develops in a way that you can support.

3. We are also pleased to have the private, commerical sector represented here. The ANIK-B program will give them the opportunity to test and develop new services. Aside from testing the ANIK-B system for applications which are of concern to them, the carriers will have an opportunity to participate in a program which has as its objective, the assessment of operational feasibility and desirability of a variety of new telecommunications service.

4. The DOC hopes that the ANIK-B program will bring together both the users and the providers of communications services, in a process which will be mutually beneficial in the future.

5. The meeting for the next two days should really be seen as a bringing-together of the participants, as should the overall ANIK-B program be seen very much as a program for the participants. The DOC is seeking your advice as to where you see viable applications of communications technology in your area of interest.

6. In this meeting, we plan to organize into groups with like interests, in the hope that a concensus can be developed at least on the objectives of a single pilot project in each area. By this means we seek your advice to help us understand what your needs are, and how we can help you to meet them. Only through an interactive process will we arrive at the best pilot projects which will lead to viable long-term arrangements.

7. I am looking forward to the development of pilot projects which will answer some of the major questions - our and yours.

8. The minister herself has followed closely the development of the ANIK-B program. She hopes she will be able to join you, the meeting participants, at the reception this evening.

ANIK-B PROGRAM OBJECTIVES

BY

DR. J.H. CHAPMAN

ASSISTANT DEPUTY MINISTER SPACE PROGRAM

1. INTRODUCTION

1.1 The DOC invites interested groups to participate in the ANIK-B communications program.

1.2 Responses to our invitation indicate that there is substantial interest; the attendance at this workshop demonstrates this interest as well.

2. BACKGROUND

Why did we acquire ANIK-B?

a) Many of the participants at this workshop have used the Hermes Communications Technology Satellite. The Hermes experiments demonstrated the application of satellite communications to health care delivery, education, community development, public administration etc. Several experiments are complete, others are still underway, and others have still to begin in the near future. Inquiries regarding participation in the project are still being received.

b) To the DOC these experiments have demonstrated significant interest by user groups in the public services sectors in testing and developing new services utilizing satellite technology. We are very pleased that the Hermes project has created such interest. We are also pleased that user groups have started to define and consolidate their interests; for example, the organization of interest groups, etc. Within our mandate, we will gladly assist and encourage such developments.

c) However, it has become clear (DOC, experimenters and planners in the public services sector appear to agree) that;

   i) Hermes type applications need to be further tested and developed,

   ii) DOC has a continuing responsibility in regard to further prove out new services in order to ensure that challenging, innovative and desirable new services have a fair chance of being tested to the extent that rational decisions regarding their future desirability can be made.

This process brought us to the ANIK-B communications program.

d) When will ANIK-B be available?

ANIK-B is due for launch in November 1978, and to be available for use early in 1979.

DOC has a 2-year lease of the communications capacity, with an option for extension for a further three years.

3. THE ANIK-B COMMUNICATIONS PROGRAM

a) It is our expectation that at the end of the ANIK-B program sufficient data have been gathered which will allow the user organization to decide whether or not satellite (or telecommunications) systems are a useful and desirable vehicle to provide their services on a long-term basis.

b) These expectations can only be realized with continuous input, participation and direction from user agencies.

The progression first, from the Hermes experiments, second, to the ANIK-B project and third, to the decision regarding operational systems is a logical process. This sequence determines the ANIK-B project goals, the role of the DOC and others in the project, the sharing of resources among all participants and the selection process.

4. THE GOALS OF THE ANIK-B PROGRAM ARE:

- to determine the viability, on a pre-operational but continuing basis, of telecommunications services designed to meet identified requirements,

- to develop the knowledge and expertise to better utilize 12/14 GHz satellite communications technology; and

- to develop expertise and create awareness in user institutions of the potential of telecommunications to deliver new services.

Let me underline again, that it is our goal to provide the opportunity for you to test, in a rational process, the utility of telecommunications in the delivery of new services, it is not to convince you of the operational desirability of these services.

Also, many of the lessons learned in this program will be more widely applicable than only to satellites. In many instances, 'satellite' could be replaced by 'telecommunications' as the underlying processes for users are the same. However, in some regards, satellite systems are best for field trials as the earth terminals are flexible and can be moved/removed much more easily than terrestrial systems.

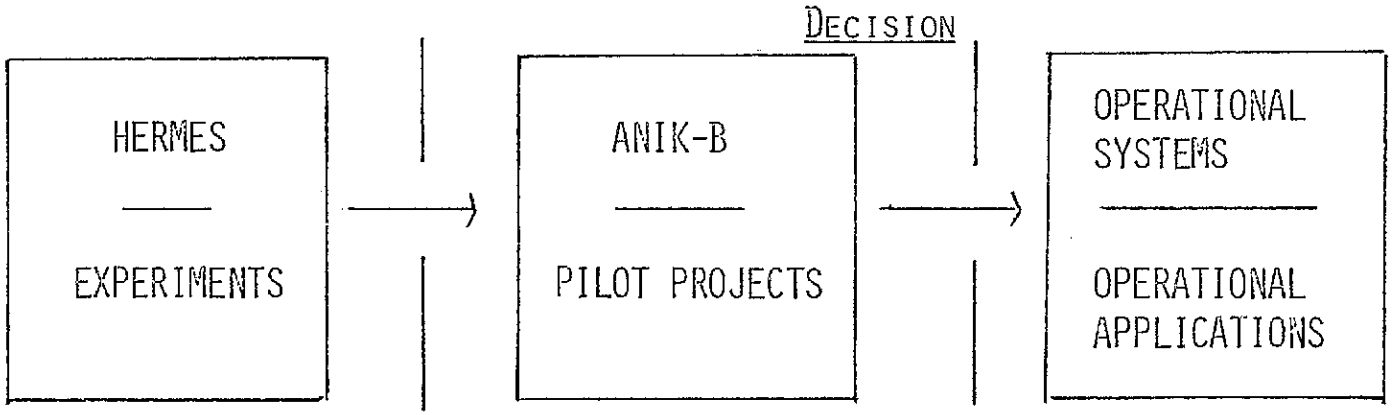
DECISION
HERMES
EXPERIMENTS
ANIK-B
PILOT PROJECTS
OPERATIONAL
SYSTEMS
OPERATIONAL
APPLICATIONS

ANIK-B PROGRAMME GOALS:

DETERMINE VIABILITY OF TELECOMMUNICATIONS SERVICES TO MEET IDENTIFIED PUBLIC SERVICE REQUIREMENTS

DEVELOP KNOWLEDGE AND EXPERTISE TO BETTER UTILIZE 12/14 GHz SATELLITE TECHNOLOGY

DEVELOP EXPERTISE AND CREATE AWARENESS IN USER INSTITUTIONS OF THE POTENTIAL OF TELECOMMUNICATIONS TO DELIVER NEW SERVICES

5. ROLE OF DOC

a) It is DOC and government role to foster new services to the level where rational decisions concerning their operational desirability can be made. Thus, it is most desirable to take the next step following the series of Hermes experiments. There are plenty of examples in regard to field trials in the public services sector where support ceased too early and therefore all early initiative and positive developments were lost.

b) However, at the same time, DOC is not in the business of establishing a subsidized satellite system in the future, where free-of-charge services will be provided. In the post ANIK-B phase, satellite services will have to be sought by the users in appropriate arrangement with carriers.

c) DOC hopes that the ANIK-B program will help the public services users to become active and aware consumers of satellite services. We see our role as that of a catalyst for interaction between the public service users of satellite technology on one side and the providers of these services on the other. The program should be a great challenge for both sides to mutually explore their interests and identify viable options for the future.

d) In specific terms, the DOC will assist and support (within its resources and mandate) the public services sector. This does not take away from the fact that DOC will make its best efforts to provide the commercial services sector with the opportunity to utilize the ANIK-B capacity for their proper purposes. However, if commercial benefits are being derived from any of the projects, the DOC will look for appropriate compensation.

e) The DOC understands its role as that of a catalyst and as such it will do its best to see that demands and expectations which were created in the ANIK-B project can be carried out in an operational system.

6. ROLE OF PARTICIPATING USERS

a) Without active participation of agencies ultimately responsible for the provision of public services, the ANIK-B program would not reach its goals. Many of the services which may be tested in the pilot projects, fall under government mandates or are government-supported. In the development of pilot projects and in their selection, we intend therefore to work closely with the responsible governments. This, we think, will help to insure that findings will be translated into future action. We also seek from the responsible agencies commitment to individual pilot projects and expect them to fund and support the non-telecommunications portions of the programs.

PROGRAMME DEVELOPMENT

ROLE OF DOC

ROLE OF PARTICIPANTS

ROLE OF CARRIERS

b) We aim to insure active participation of the user groups/agencies in the development of the pilot projects program.

i) The establishment of six working groups during the next two days is a first step into this direction. The working groups reflect the main areas in which you had indicated interest. Discussions over the next two days will show if the organization of six working groups is appropriate for the task ahead.

ii) We have no question, however, concerning the fact that the groups must be chaired by someone from the user community. DOC personnel will only act as resource persons and advisors.

iii) The task ahead for the working groups is to define the parameters for ANIK-B pilot projects, to identify long-range project implications and effects in the service area. Through interaction within a community of interest, (e.g. health care or education) a pilot project might be developed which is truly representative of concerns, interests and future direction within these areas. Thus, we hope that out of these working groups, whose nuclei are established in the next two days, viable pilot projects will develop.

iv) We also hope that some form of working groups or user association will develop with the objective to,advise, organize and monitor individual projects. We will help you to define the parameters of such an association.

7. ROLE OF THE CARRIERS

a) DOC is not in the business of providing operational communications systems. This is the carriers' role.

b) We hope that the ANIK-B program stimulates the carriers;

i) to recognize that there may be a serious market developing in the public services sector,

ii) to appreciate the special systems requirements of the public services sector.

c) It is hoped that the carriers will take it as their responsibility to seriously analyse with the DOC and the user groups the kinds of options open for future systems developments.

8. RESOURCES

DOC a) DOC resources are limited to satellite time and to a small number (20) of ground stations (modified HERMES terminals). If required, approved pilot projects may have the options to lease additional terminals.

RESOURCES

DOC

PARTICIPANTS

SELECTION PROCESS

SCHEDULE AND AVAILABILITY ASSESSMENT

ADVICE FROM SECTORS WITH ONGOING RESPONSIBILITY FOR SERVICE DELIVERY

b) DOC will use its resources to support public services which are provided by governments or which have the support of governments.

c) It is not likely that private sector or commercial services will have access to DOC ground terminals, as interest from public service users indicates a great demand.

PARTICIPANTS:

a) Project participants are expected to bear the costs for project development, operation and evaluation. If requirements for terminals extend beyond those provided by the DOC, the participants will be asked to enter into an arrangement to lease extra terminals from Telesat.

9. PILOT PROJECT ACCEPTANCE PROCESS

a) In the selection of pilot projects, the DOC will have to balance time available on the satellite, and the availability of terminals. Some pilot projects may start in the first year, others may be scheduled to begin in the second or later years.

b) The workshop over the next two days will provide a first 'round' in which some of these factors can be brought out.

10. OBJECTIVES OF THIS INFORMATION EXCHANGE SESSION

DOC: a) presents the satellite system capacity and the technical resources available,

b) presents the program goals and planning process,

c) identifies our expectations in commitments from project participants,

d) fosters interaction between user groups in order to develop a number of pilot projects,

e) needs your advice for the next steps in the planning process, as it is only the users who can identify their needs and requirements.

We hope that this meeting will only be a first in a series where the users of satellite technology jointly define their needs and interests.

11. CONCLUSION

After all, participation in the ANIK-B project and a joint investigation of the potential utility of satellite communications could indeed reverse the famous bon mot, which has plagued the technology-public service interface for too long:

"TECHNOLOGY IS THE SOLUTION. WHAT WAS THE PROBLEM?"

PROGRAM MANAGER'S REMARKS

BY

M.V. PATRIARCHE

Viewgraph No. 1, Goals

In the first goal, the word "pre-operational" is not a pre-judgement on the part of DOC, but is intended to indicate the nature of pilot projects to be carried out. The word "continuing" indicates DOC's assessment that it would normally require from a minimum of six months to over 1 year for a pilot project to satisfy program goals; but, if users believe that goals may be satisfied with a shorter pilot project, their proposals are welcome. The key words in the second goal are "better utilize". This goal does not relate to the development of new technology, but rather an improvement in ability to exploit the particular strengths of 12/14 GHz technology and overcome its particular difficulties. In goals 1 and 3, it should be noted that "telecommunications" is used in a broad sense. A new terrestrial telecommunications service being developed through the ANIK B Communications Program would be regarded as a program success.

Viewgraph No. 2, History

It should be noted that in addition to providing leased 14/12 GHz telecommunications services to the Federal Government, ANIK B will be used by Telesat Canada as an operational replacement at 6/4 GHz.

Viewgraph No. 3, ANIK B Service Lease

Viewgraph No. 4, ANIK B Communications Program Organization

Two parallel organizations are involved in managing the ANIK B Communications Program. DOC Headquarters deals with programs as entities. It is responsible for program goals, policy considerations, management of overall resources, and long range planning to promote a smooth transition to following programs, if any. The Communications Research Centre deals with projects as entities. It is this organization which actually carries out the activity and with whom users will have the most contact once pilot projects are established. CRC is responsible for definition of communications systems, development of pilot projects, and implementation of approved projects (including day-to-day liaison with users). Smooth operation of the program requires extensive lateral communications between the Program Manager and the Project Director.

Viewgraph No. 5, DOC Assistance to Users

The DOC has limited resources which will be allocated to promote satisfaction of the program goals in an optimum manner. Users will be expected to commit resources to their pilot projects. For example, most non-technical organizations will find it necessary to retain technical consultant staff. With respect to the statement that DOC will maintain those earth terminals that it loans, the "special circumstances" referred to will be determined on a case-by-case basis, but would likely involve dangerous or unusually isolated locations.

Viewgraph No. 6, Preliminary Timetable

The deadline for receipt of proposals referred to (31 January 1978) is for the first set. Other proposals will be processed as resources become available.

ANIK B COMMUNICATIONS PROGRAM

GOALS

1. TO DETERMINE THE VIABILITY, ON A PRE-OPERATIONAL BUT CONTINUING BASIS, OF TELECOMMUNICATIONS SERVICES DESIGNED TO MEET IDENTIFIED REQUIREMENTS;

2. TO DEVELOP THE KNOWLEDGE AND EXPERTISE TO BETTER UTILIZE 12/14 GHz SATELLITE COMMUNICATIONS TECHNOLOGY; AND

3. TO DEVELOP EXPERTISE AND CREATE AWARENESS IN USER INSTITUTIONS OF THE POTENTIAL OF TELECOMMUNICATIONS TO DELIVER NEW SERVICES.

VIEWGRAPH 1

ANIK B

HISTORY

1. TELESAT CANADA CONTRACTED WITH RCA - AED IN DECEMBER 1975 TO PURCHASE A HYBRID SATELLITE WITH:

   - 12 TRANSPONDERS AT 6/4 GHz FOR OPERATIONAL REPLACEMENT OF AN ANIK A

   - 4 TRANSPONDERS AT 14/12 GHz TO BE LEASED BY FEDERAL GOVERNMENT

2. DOC/TELESAT CONTRACT SIGNED IN MARCH 1977.

3. ANIK B COMMUNICATIONS PROGRAM ESTABLISHED SEPTEMBER 1977.

ANIK B SERVICE LEASE

-- "TO PROVIDE 14/12 GHz TELECOMMUNICATION SERVICES TO HER MAJESTY FOR EXPERIMENTAL PURPOSES".

-- TWO YEAR DURATION, STARTING PRIOR TO 1 MARCH 1979 (ENDING 1981)

-- GOVERNMENT OPTION TO EXTEND SERVICE BY THREE YEARS, EXERCISABLE DURING THE FIRST 15 MONTHS OF SERVICE

-- GOVERNMENT HAS NO EQUITY IN ANIK B

VIEWGRAPH 3

ANIK B COMMUNICATIONS PROGRAM

ORGANIZATION

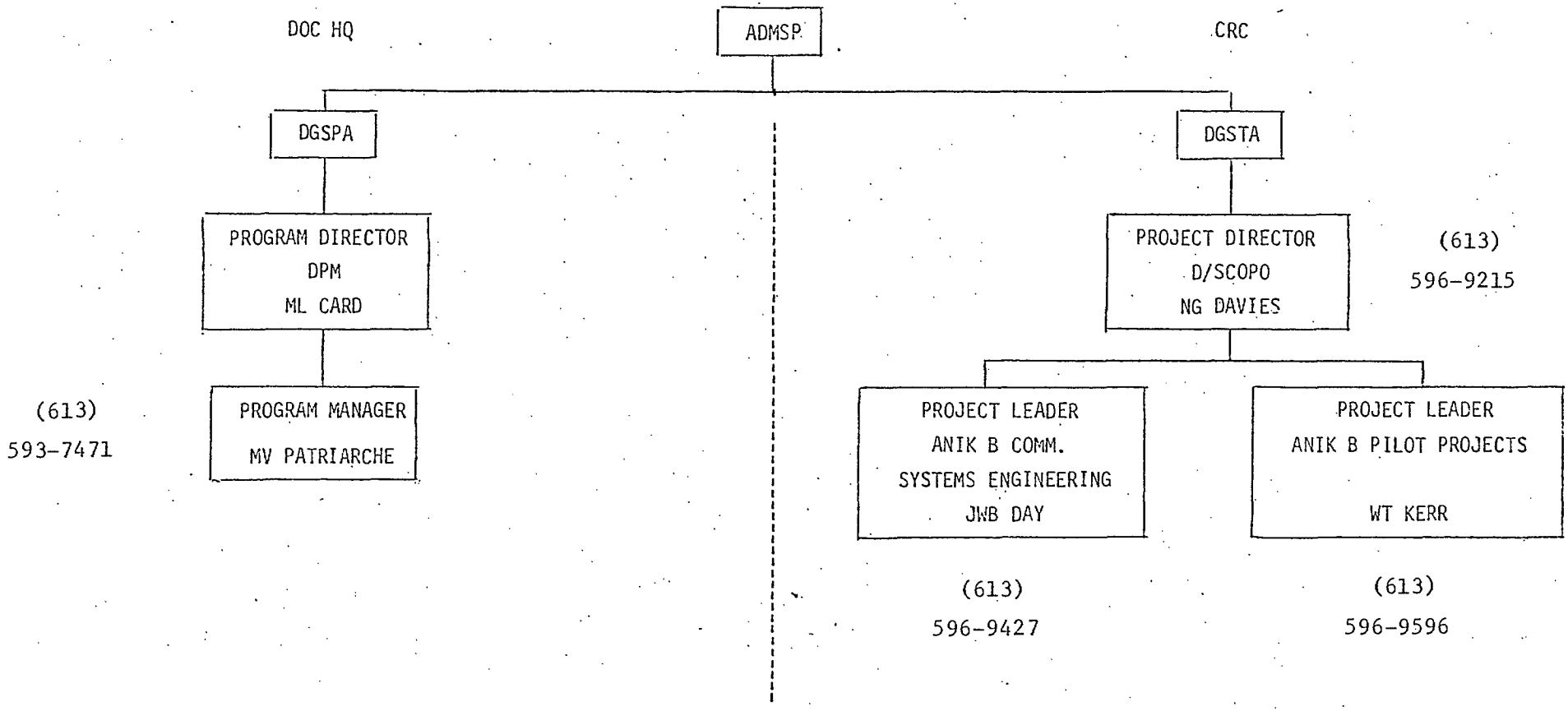

VIEWGRAPH 4

DOC ASSISTANCE TO USERS

* SATELLITE CAPACITY: PROVIDED FREE TO PUBLIC SERVICE USERS (SEE NOTE BELOW)

* EARTH TERMINALS: UP TO 20 CONVERTED HERMES EARTH TERMINALS LOANED TO PUBLIC SERVICE USERS ON A PRIORITY BASIS

* EARTH TERMINAL MAINTENANCE: DOC WILL MAINTAIN THOSE TERMINALS THAT IT LOANS, EXCEPT IN SPECIAL CIRCUMSTANCES

* CONSULTATION: DOC WILL BE ABLE TO PROVIDE LIMITED CONSULTATION

NOTE: WHERE THERE IS A COMMERCIAL BENEFIT TO BE DERIVED FROM PARTICIPATION IN ANIK B, THE USER IS EXPECTED TO CONTRIBUTE TO COSTS ACCORDINGLY.

ANIK B COMMUNICATIONS PROGRAM

PRELIMINARY TIMETABLE

DEADLINE FOR RECEIPT OF PROPOSALS	31	JANUARY	1978
DOC ACCEPTANCE OF PROPOSALS	28	FEB	78
ANIK B LAUNCH	9	NOV.	78
SERVICE COMMENCEMENT (ESTIMATED)	1	FEB	79
END OF TWO-YEAR PROGRAM (ESTIMATED)		JAN	81
END OF OPTIONAL PROGRAM (ESTIMATED)		JAN	84
END OF SATELLITE DESIGN LIFE (ESTIMATED)		NOV	85

VIEWGRAPH 6

INFORMATION EXCHANGE - OBJECTIVES AND PROCEDURES

BY

N.G. DAVIES

The objectives of this Information Exchange Meeting are as outlined on Viewgraph 1, and Viewgraph 2 will indicate to you the procedures we will adopt in seeking to achieve these objectives. This morning, we have planned to provide you with information on the opportunity to carry out pilot projects with ANIK-B and to describe and illustrate the potential communications capability of the system. Shortly, we will be breaking into discussion groups to consider potential pilot projects and to obtain information from potential users on their requirements for participation. We expect to obtain a joint appreciation of the opportunity afforded by pilot projects. As resources will be limited, we will also seek to determine the potential to aggregate pilot projects within a discipline (such as telehealth, community communications, etc.).

In this process, we would like to develop, where possible, specific concepts of pilot projects and also to explore the potential to form ongoing working groups, in association with the pilot projects, in order to derive the maximum benefit from the projects.

We look forward to receiving reports of the chairman of these discussion groups and will seek to respond tomorrow morning to the major points which may be raised. Taking into account the input from the discussion groups, we will then review with you a proposed project implementation process and conclude by summarizing future program action plans.

OBJECTIVES OF ANIK-B INFORMATION EXCHANGE MEETING

1. PROVIDE INFORMATION ON THE OPPORTUNITY TO CARRY OUT PILOT PROJECTS USING ANIK-B.
2. DESCRIBE THE POTENTIAL SYSTEM CAPABILITY.
3. DISCUSS POTENTIAL PILOT PROJECTS.
4. OBTAIN INFORMATION FROM POTENTIAL USERS.
5. DEVELOP A JOINT APPRECIATION OF THE OPPORTUNITY AFFORDED BY PILOT PROJECTS AND THE POTENTIAL TO AGGREGATE PROJECTS.
6. DEVELOP, WHERE POSSIBLE, SPECIFIC CONCEPTS OF PILOT PROJECTS.
7. FORM NUCLEUS OF ONGOING WORKING GROUPS IN IDENTIFIED AREAS SO AS TO DERIVE MAXIMUM BENEFIT FROM THE PILOT PROJECTS.

VIEWGRAPH #1

PROCEDURES FOR ANIK-B INFORMATION EXCHANGE MEETING

1. DOC PROVIDES BASIC INFORMATION.
2. DIVISION INTO DISCUSSION GROUPS TO EXCHANGE INFORMATION AND DEVELOP IDEAS.
3. REPORT RESULTS OF DISCUSSION.
4. RESPONSE BY DOC TO INPUT FROM DISCUSSION GROUPS.
5. DISCUSSION OF PROJECT IMPLEMENTATION PROCESS.
6. REVIEW OF PROGRAM ACTION PLANS,

VIEWGRAPH #2

ANIK-B SYSTEM CAPABILITIES AND CONSTRAINTS

BY

J.W.B. DAY
PROJECT MANAGER
ANIK-B COMMUNICATION SYSTEMS ENGINEERING

ANIK B COMMUNICATIONS SYSTEM AT 12/14 GHz

12/14 GHz Transponder

Communications System

Ground Terminals

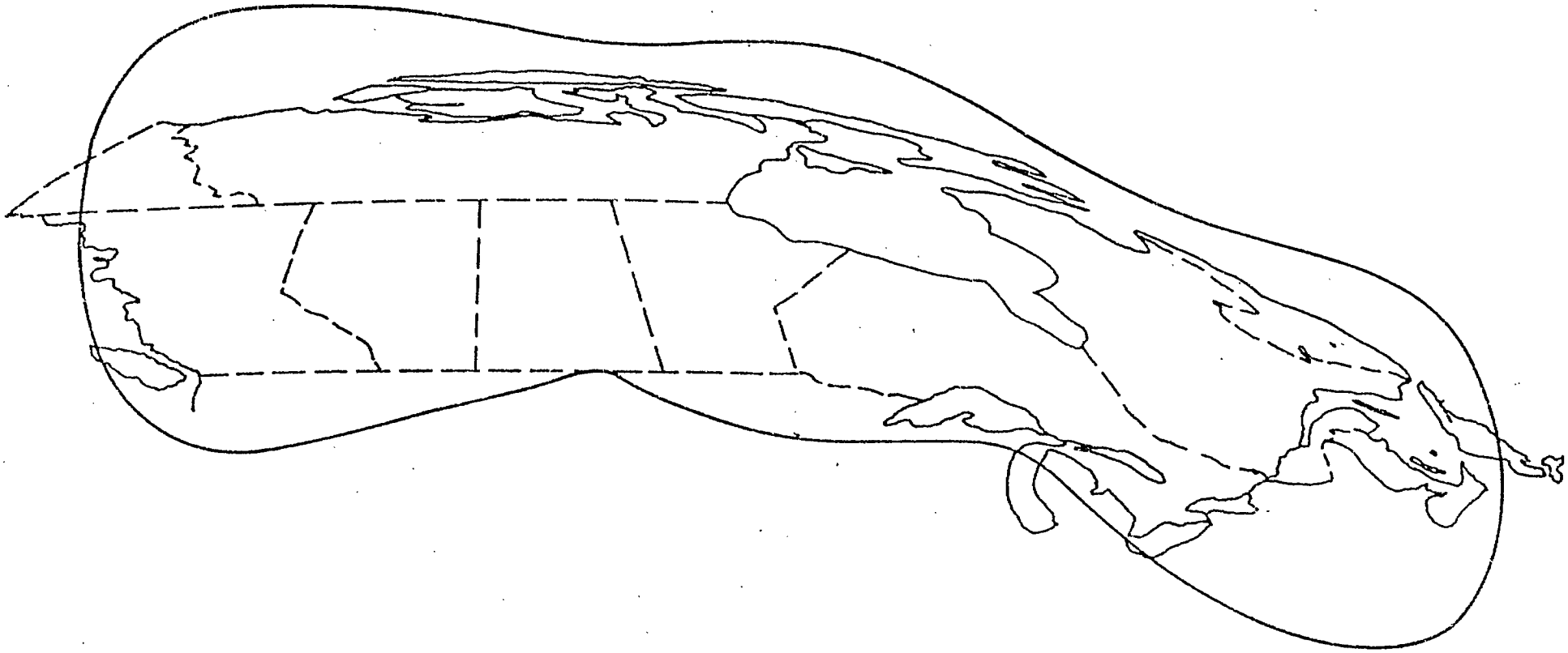

SPACECRAFT RECEIVE COVERAGE AREA

(G/T = 1 dB/K, SED = -86 dBW/m^2)

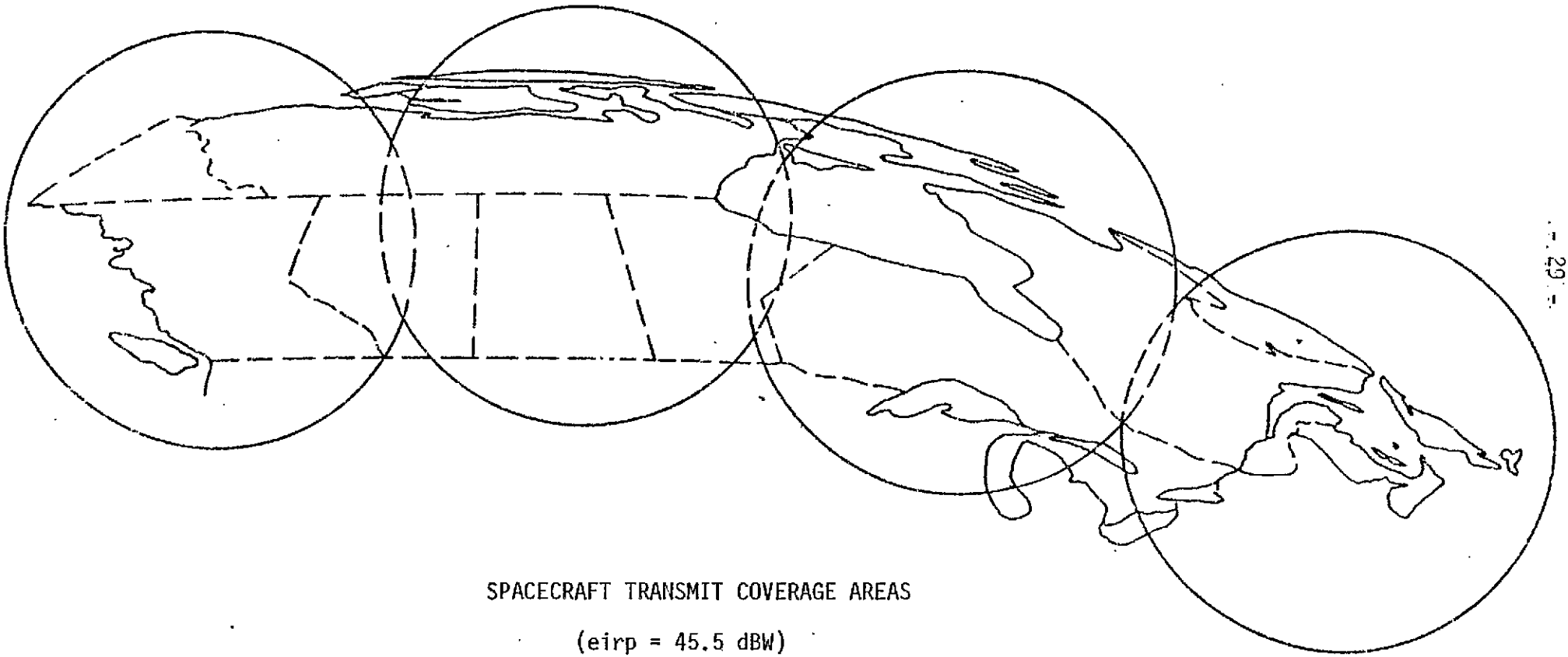

SPACECRAFT TRANSMIT COVERAGE AREAS

(eirp = 45.5 dBW)

ASSUMPTIONS FOR INITIAL PLANNING

1. TRAFFIC - VIDEO (WITH AUDIO) PLUS TWO-WAY TELEPHONY.

2. ONE TWTA - ONE VIDEO CARRIER (WITH AUDIO) PLUS MULTIPLE NARROW-BAND TELEPHONY CARRIERS.

3. TELEPHONY CHANNEL SWITCHING - TWO-HOP SATELLITE MODE, SINGLE NCT IN OTTAWA.

4. TELEPHONY - SINGLE-CHANNEL-PER-CARRIER.

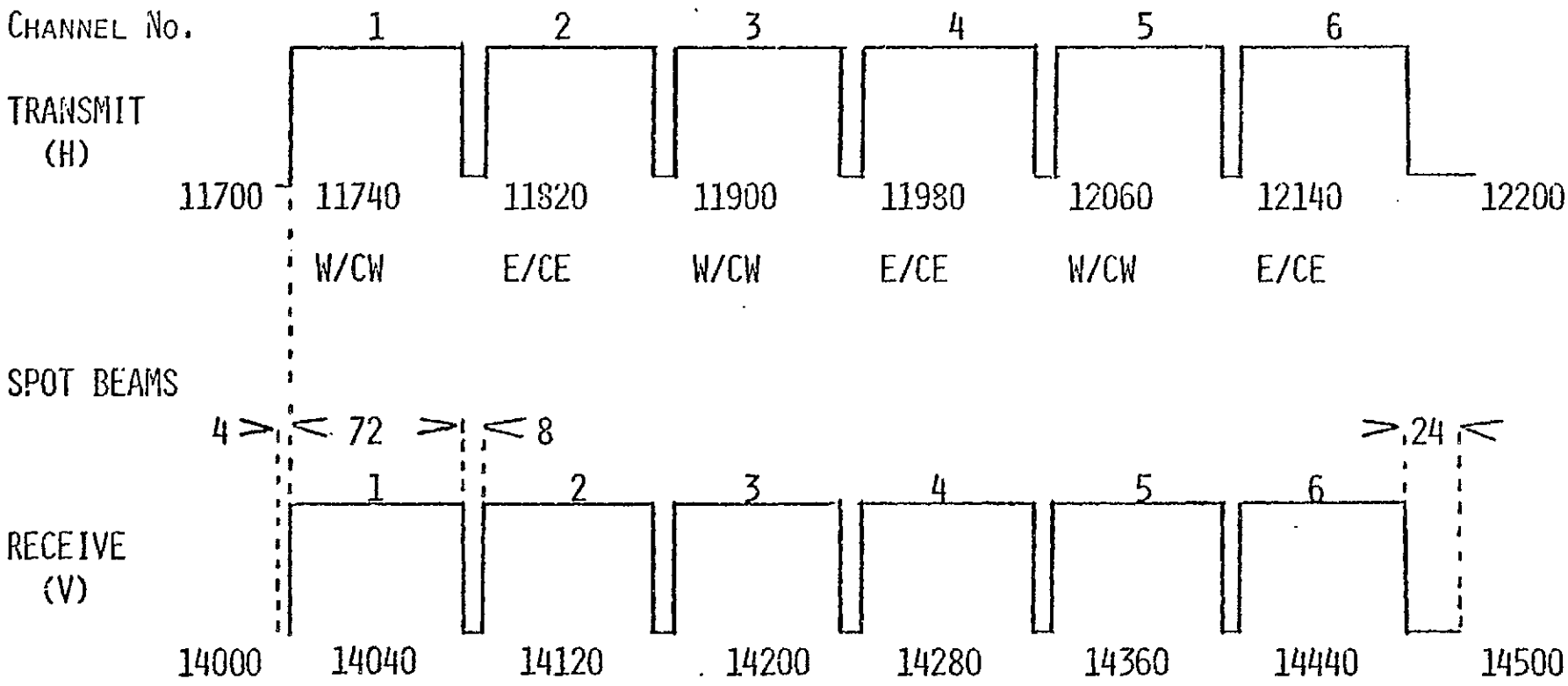

H = POLARIZATION ORTHOGONAL TO N-S AXIS

V = POLARIZATION PARALLEL TO N-S AXIS

NOTE: ALL FREQUENCIES IN MHz

FREQUENCY ALLOCATION AND POLARIZATION PLAN

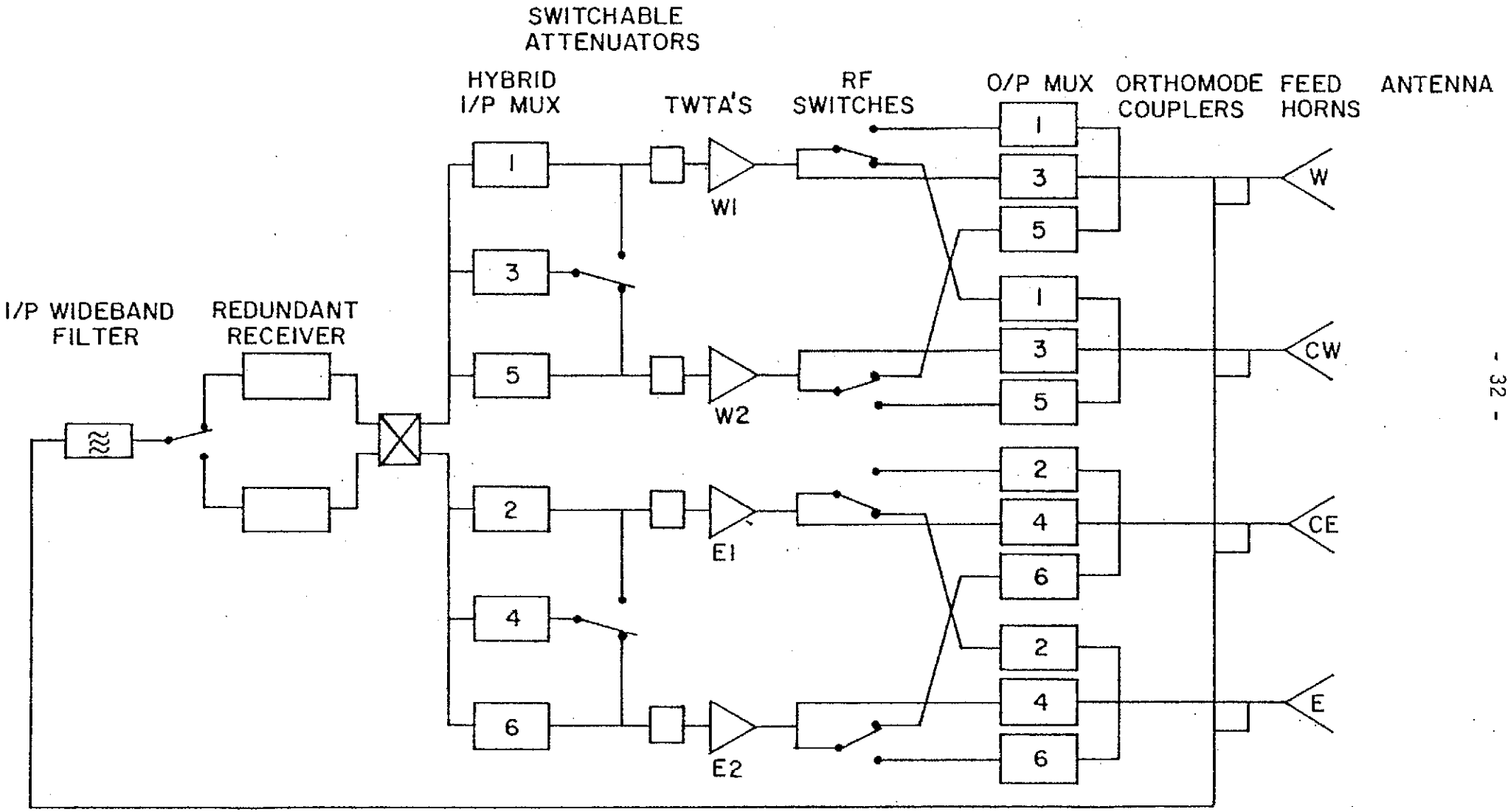
SWITCHABLE
ATTENUATORS
HYBRID
I/P MUX
TWTA'S
RF
SWITCHES
O/P MUX
ORTHOMODE
COUPLERS
FEED
HORNS
ANTENNA
I/P WIDEBAND
FILTER
REDUNDANT
RECEIVER
1
3
5
2
4
6
W1
W2
E1
E2
W
CW
CE
E

ANIK B 9M OTTAWA TERMINAL

9M DIAMETER ANTENNA - TRACKING.

TRANSMIT/RECEIVE ONE VIDEO CHANNEL PLUS AUDIO (3).

TRANSMIT/RECEIVE AND SWITCH ALL SCPC TELEPHONY CHANNELS FROM USER AND TV TRANSMIT TERMINALS.

TUNABLE TO COVER ALL SIX ANIK B CHANNELS.

BASEBAND VIDEO AND TELEPHONY INTERFACES.

IF INTERFACE FOR OTHER TYPES OF SIGNALS.

ANIK B TV TRANSMIT TERMINAL

3M DIAMETER ANTENNA (TENTATIVE) - NON-TRACKING.

TRANSMIT/RECEIVE ONE VIDEO CHANNEL PLUS AUDIO (3).

TRANSMIT/RECEIVE ONE SCPC TELEPHONY CHANNEL.

OPTIONAL ADDITIONAL TELEPHONY CHANNELS UP TO FOUR.

TUNABLE TO COVER ALL SIX ANIK B CHANNELS.

BASEBAND VIDEO AND TELEPHONY INTERFACES.

IF INTERFACE FOR OTHER TYPES OF SIGNALS.

ANIK B USER TERMINAL

3M DIAMETER ANTENNA (TENTATIVE) - NON-TRACKING.

RECEIVE ONE VIDEO CHANNEL PLUS AUDIO (3).

TRANSMIT/RECEIVE ONE SCPC TELEPHONY CHANNEL.

OPTIONAL ADDITIONAL TELEPHONY CHANNELS UP TO FOUR.

TUNABLE TO COVER ALL SIX ANIK B CHANNELS.

BASEBAND VIDEO AND TELEPHONY INTERFACES.

IF INTERFACE FOR OTHER TYPES OF SIGNALS.

FORMATION OF DISCUSSION GROUPS

From the information that has been provided on your registration forms, the attendees have been divided into six discussion groups. While these groups do not specifically cover every interest that has been identified, we have sought to implement a logical combination. Attendees are requested to join the indicated discussion group, or if you wish to make a change, please discuss this with Terry Kerr or Gaetan Theriault.

Chairmen for the discussion groups have been selected from outside DOC in order to ensure that the user interest is properly represented. However, to assist the chairmen, we have appointed DOC animateurs and have requested DOC resource persons to also be present during the discussions. We have requested the chairmen to give a verbal summary of the discussion at the end of the day and to raise potential problems in order that we can respond effectively tomorrow.

The discussion groups, with their chairmen and animateurs are as follows:

Discussion Group	Chairman	DOC Animateur
Health	A.M. House	W.T. Kerr
Education	P. Bowers	A. Casey-Stahmer
Citizen and Community Communications	H. Taylor	D. Jelly
Broadcasting Applications	L. Petrie	J. Day
Commercial, Private Line, Data and Message Services, Electronic Mail	A. Sophianopoulos	M. Patriarche
Technical/Technological	S. Haykin	P. Nuspl

Members of the discussion groups are as listed on the following pages.

Viewgraph 1 lists the objectives of the discussion groups and Viewgraph 2 indicates three points we request each chairman to include in his report.

OBJECTIVES OF DISCUSSION GROUPS

1. DISCUSS POTENTIAL PILOT PROJECTS.
2. OBTAIN INFORMATION FROM POTENTIAL USERS ON THEIR REQUIREMENTS FOR PARTICIPATION.
3. DEVELOP APPRECIATION OF POTENTIAL FOR AGGREGATION OF PILOT PROJECTS.
4. DEVELOP SPECIFIC CONCEPTS OF PILOT PROJECTS.
5. FORM NUCLEUS OF ONGOING WORKING GROUPS.

VIEWGRAPH #1

OUTPUT OF DISCUSSION GROUPS

1. LIST OF CONCEIVABLE PILOT PROJECTS.
2. SUMMARY OF RESULTS OF DISCUSSION.
3. EXPOSURE OF PROBLEMS AND POTENTIAL SOLUTIONS.

VIEWGRAPH #2

DISCUSSION GROUP 1 - HEALTH - Room 520

A.M. House (Chairman)	Memorial University, Newfoundland
K. Butler	Health and Welfare Canada
L.S. Carey	University of Western Ontario, London
K. Hauschildt	Memorial University, Newfoundland
J. Roberts	Memorial University, Newfoundland
E.S. Russell	University of Western Ontario, London
Dr. Snidell	University of Manitoba
D.B. Starcher	Memorial University, Newfoundland
D.I. Towers	Ontario Government
W.T. Kerr (Animateur)	DOC/CRC
R.W. Huck	DOC/CRC
D. Phillips	DOC/CRC
C.D. Shepard	DOC/HQ

DISCUSSION GROUP 1

HEALTH

Chairman - Dr. A.M. House

Animateur - Mr. W.T. Kerr

Attending this group meeting were approximately fifteen people representing the University of Manitoba Faculty of Medicine, Memorial University Faculty of Medicine and Education Television Centre, University of Western Ontario Faculty of Medicine, Department of Health and Welfare Canada, Ontario Government and Department of Communications.

It was the opinion of this group that while health users had certain clearly identifiable unique interests, there was substantial overlap with other groups, particularly education and community service. There was concern that too few health representatives were present and it was felt that this may be due to a combination of factors, particularly lack of interest and lack of information. It seems unlikely that the information on Anik B had filtered down to potential health user groups in all provinces.

The working group first reviewed the definition of telehealth or telemedicine and accepted the following as a brief classification:

SERVICE - HEALTH CARE DELIVERY

- Consultations
- Administration
- Transmission of data
  - slow scan or freeze frame
    - X-rays, ultrasound, images, microscopic slides
    - computer hookups

EDUCATION

- Continuing education of allied health professionals, physicians, nurses.
- Training of community health workers and outpost nursing students.
- Supervision of laboratory and other students rotating to peripheral institutions.
- Community health education.

It was evident that a substantial amount of education occurred during consultation and other service activities. It is further noted that there is often a service component in most health educational programmes.

Education could take place on a regional, provincial or national basis using Anik B. Of considerable interest to the group was the possibility of inter-city or inter-province networks. For example,

it was thought that the Royal College of Physicians and Surgeons may well be interested in a nationwide project.

The group next discussed individual pilot projects. It was obvious that the short period of time available for preparation made it difficult for users to give more than an outline of their proposals.

The University of Western Ontario described a system which would provide support services for a base hospital from the University Hospital. This would include administrative supervision, quality control and supervision of both the usage and service of sophisticated equipment. A consultation service would be a part of and follow on the provision of support programmes for allied health professionals in the base hospital.

The system would also include narrow band transmission from the nursing stations relating to the base hospital at Moose Factory.

The Ontario Government group described a comprehensive system which would allow programmes directed to health service administration and education, a variety of community services with facilitation of communication links between government agencies. The project envisions provision of services to base hospitals and includes narrow band links with many nursing stations.

The University of Manitoba representative described a potential communications system that would link base hospitals with a tertiary care centre and utilize already existing audiovideo links in the city of Winnipeg. There would be a prominent educational component but consultations and transmission of medical data would form part of the project. The desirability of linking nursing stations with base hospitals was stressed.

Memorial University of Newfoundland, which had recently completed an experiment with Hermes, outlined in general terms a system that would allow consultations to be provided for a peripheral and isolated hospital using broad band transmission and narrow band transmission from up to a half dozen nursing stations and base hospitals. An education programme which included continuing education for allied health professionals would require a transmit terminal as well at the University. Training programmes for community health workers and outpost nursing students are being considered.

Because broad band transmission is so expensive it was thought likely that emphasis on narrow band transmission for consultation and service may have to take precedence over broad band. However, for an adequate educational programme one transmit terminal would be necessary at the University.

The Memorial group were interested in exploring the feasibility of an interprovincial or national medical educational network and thought the Royal College of Physicians and Surgeons of Canada might want to participate in this.

Finally, this group were concerned about the follow up of the pilot project and wanted to explore the utilization of terrestrial links that might substitute for the satellite later.

REQUIREMENTS FOR PARTICIPATION.

The following were discussed:

Funding

This was seen as a major requirement and at an early stage. It was unlikely that extensive pilot project design could proceed without some indication that funds would be available for worthy projects. There was concern that such money might not be provided unless the projects were worked through to the point where evaluation and approval was possible. The "chicken and egg" problem.

Terminals

The group thought there would be an insufficient number of terminals to carry out the various projects. There was concern that pilot projects may have to be shortened and results may be inconclusive. There was a clear consensus that additional terminals should be obtained.

The information that video receive terminals might possibly be available in the future was of considerable interest. These would be very valuable for educational programmes particularly if there was a backup teleconferencing network such as the Darome system used by the University of Wisconsin and Memorial University.

Timing

The short planning and experimental design period was seen as an inhibitory factor. It seemed likely to the group that a number of pilot projects would fall into the later available time. Preparation time will be necessary to ensure funding.

Aggregation of projects

It was the consensus that projects would best be shared, combined or aggregated on geographical grounds rather than on interest areas or specialties. The problem of duplication of effort would therefore have to be remembered. This will justify a significant effort at information exchange.

Educational programmes or pilot projects would appear to have more of an interprovincial or national potential than most other projects.

The group discussed the length of experiments particularly to consider the problem of withdrawal if projects were of a service nature and of long duration. Substitute programmes of a terrestrial nature should be considered.

Despite this consideration, it seemed important that projects were of a length that would justify them.

The group thought that continuing research was necessary. Most members were of the opinion that we were not yet ready to choose any particular form of telecommunications and institute a service. Every pilot project should stand up to careful evaluation and this fact should be considered from the beginning when the design is begun.

The health group thought it would be valuable if another meeting could be held before the end of January. Short of this there should be adequate information exchange. A large meeting of various interest groups in the near future was considered unnecessary. The cost of these meetings to some participants is quite significant.

DISCUSSION GROUP 2 - EDUCATION - Room 521

P. Bowers (Chairman)	Ontario Educational Communications Authority
D. Colville	Office of Communications Policy, Nova Scotia
J. Daniel	Tele-Université, Québec
L. Green	Inuit Tapirisat of Canada
L. Lacroix	Ontario Educational Communications Authority
L. Leclerc	Ministère des Communications, Québec
N.J. MacPherson	Government of Northwest Territories
C. McNamara	Memorial University, Newfoundland
M. Robin	Tele-Université, Québec
M. Richmond	Athabasca University, Edmonton
W. Rowsell	Dept. of Transportation & Communications, Nfld.
M. Ryan	Public Service Commission
V. Sahay	DOC/HQ
R. Starr	Telecommunications Devpt. Manitoba Gov't.
J. Thwaites	DOC Pacific Region - Vancouver
J. Underhill	Telesat Canada

A. Casey-Stahmer (Animateur)	DOC/HQ
J. Langlois	DOC/HQ
R.K. Tiedemann	DOC/CRC

DISCUSSION GROUP 2

EDUCATION

Chairman - P. Bowers

Animateur - A. Casey-Stahmer

Composition of Panel.

7 'Programmers' (involved in delivery of Public Services)

8 'Policy Ministries' (involved in Policy formulation rather than delivery of services).

Comment: DOC notice did not reach all agencies involved in delivery of public services.

Tentative Pilot Projects Identified.

1. Native Programming (Lindsey Green)
   Intentions by Inuit Tapirisat to program to native people. Travel costs consuming all financial resources. Intend to try teleconferencing as well as delivery of programs. Want to compare live video and live interaction with tape delayed video and live interaction.

2. College and University Level Programming.
   Several universities (Memorial, U of Quebec, U of Nova Scotia (Ste.Annes), Tele-Universite, and Athabasca all indicated interest in use of satellite to distribute educational programming.

3. Community Programming.
   B.C. Hermes experiment just launched cited as an example. Adult Education at the community level. Satellite feeds local cable system or community hall. Consortium of BCIT, Simon Fraser U and community colleges. Model for aggregation.

4. Remote Education.
   Also known as tele-education, distance education. Characterized by; small number of students, high production cost, high delivery cost, copyright problems and jurisdictional problems. Recent meeting in Winnipeg had uncovered large number of institutions involved in remote education. Currently a task force active to co-ordinate remote education. Could be a pilot project.

5. Elementary and Secondary Tele-Education.
   An interest expressed by Quebec, NWT and Ontario. Intention would be to offer regular elementary and secondary programming to remote communities via satellite and use supplementary voice channels to provide live tele-utilization assistance before, during, and after transmission to enhance the effective use of materials.

Tentative Pilot Projects Identified - cont.

6. Part-Time Learning.
Summer Academy. An idea offered by OECA to provide via satellite learning opportunities currently offered by television and telephone in Southern Ontario. Program is aimed at adults who are interested in developing a skill on a part-time basis. Extensive use of tutors is made, who deal with learners via a telephone circuit.

7. Adult Training and Development.
Interest was expressed by the Public Service Commission and by the Ontario Civil Service Commission to use the satellite as a tool for training and development of adult employees scattered at numerous locations.

Problems Identified.

1) Antenna Coverage.
The regional coverage of antennas tended to inhibit aggregation of experiments on a cross-regional basis.

2) Audio Only Terminals.
One individual complained about the lack of audio only terminals. It was recognized that the Receive Only Terminals could function as television receivers or radio receivers.

3) Number of Ground Stations.
The number of ground stations was seen as a limiting factor in the development of pilot projects.

4) Downstream Implications.
Experimenters/Pilot Projecters were expected to take it as an 'act of faith' that when the pilot projects were finished, satellite services would be available, at reasonable cost and reasonable access, to provide ongoing continuity, and to avoid the 'withdrawal syndrome'. (A Telesat representative indicated that Telesat was moving towards a more flexible rate structure.)

5) Lack of Awareness.
There was a general feeling that user groups and client groups were not yet aware of the potential of public service uses of satellites and that this was a limiting factor in formulating experiments.

6) Institutional Barriers.
Many people felt that institutional barriers were the greatest obstacles to be overcome in formulating experiments. Existing institutions had functional and/or territorial prerogatives which had to be addressed.

7) Timing.
Time to put together a proposal in terms of workloads and absolute time spans was seen as a problem.

8) Funding.
Securing of funds, and timing relative to the fiscal year approval cycle was seen as another problem to be solved.

Aggregation.

There was considerable discussion as to whether it was easier to aggregate by region (rationalization of hardware) or by professional or functional interest (rationalization of software).

There was general consensus that regional aggregation was easier to accomplish in terms of cost, (travel and organizational) institutional barriers, and stimulating interest.

Several vehicles were identified as possible means for aggregation, such as

-The organization being formed for Remote Education
-The Council of Ministers of Education for Canada (CMEC)
-The Agency for Tele-Education in Canada (ATEC)
-A potential users group. (An association of public service users of satellite services).

It was felt by some that the most practical way to achieve aggregation was for some "lead" agencies to formulate proposals and to invite others to participate in the experiment.

Working Group - Nucleus.

It was suggested that constraints on travel cost, communication costs, and working time would favour regional liaison at the outset. These regional meetings might lead to subsequent national meetings.

A newsletter was seen as a valuable tool for communications. Reports of CTS Hermes experience were considered important to avoid repeating past experience.

Conclusions.

1) Too soon to formulate aggregation.

2) Problematic whether another national meeting would be useful in the near future.

3) DOC visitations, on request, would be useful to facilitate development of proposals and aggregation.

4) Matrices should be prepared to identify potential aggregation possibilities, on a regional, professional and time-schedule basis.

5) Different proposals will mature at different times.

6) DOC's concern about proliferation should encourage aggregation.

PGB/bel
Nov. 8/77

DISCUSSION GROUP 3 - CITIZEN GROUP AND COMMUNITY COMMUNICATIONS
ROOM 522

H.B. Taylor (Chairman)	Indian and Northern Affairs
E. Daigle	Wa Wa Ta Native Communications Society
S. Deacon	Yukon Territorial Government
L. Desmeules	Alberta Native Communication Society
M. Haider	Maritime Telegraph & Telephone, Nova Scotia
M. Hind-Smith	Canadian Cable Television Assoc.
H. Hudson	Wa Wa Ta Native Communications Society
J. MacDonald	Indian and Northern Affairs
A. Pallister	Inuit Tapirisat of Canada
W. Rodnicki	Alberta Native Communication Society
A.A. Simpson	DOC Central Region - Winnipeg
R. Simpson	Government of Saskatchewan
J. Thiessen	Alberta Government Telephones
D.H. Jelly (Animateur)	DOC/CRC
E.D. Rainboth	DOC/HQ

DISCUSSION GROUP 3

CITIZEN GROUP AND COMMUNITY COMMUNICATIONS

Chairman - H.B. Taylor Animateur - D.H. Jelly

Proposed Pilot Projects

INUIT TAPIRISAT OF CANADA (ITC) proposed three projects.

1. Intercommunity Conference Calling Facility with both audio and video facility to enable rapid intercommunity liaison relating to administrative and other matters.

2. Juvenile Education classes.

3. Intercommunity broadcast service comprising a TV production centre in each of six major communities, which would serve not only to produce broadcast program material, but also serve as a training exercise for production and technical personnel. Intercommunity distribution would be achieved via existing CBC local transmitters.

Hardware requirements for all three projects were seen as being two TV transmit and six TV receive ground terminals. ITC stressed that it was not prepared to expand its resources on hardware, preferring to concentrate its expenditures on programming aspects.

ALBERTA NATIVE COMMUNICATIONS SOCIETY was not particularly interested in the hardware aspects of ANIK-B, but rather in production facilities and distribution of program material via local radio and TV facilities. Of prime interest is native language programming and also a pre-school education program designed to lessen the shock of school in a strange language and a strange environment. In sum an improved distribution system for existing and planned programming is of greatest concern.

WA WA TA was not interested in short term experiments. No resource base exists to enable consideration of video production. Furthermore it was not considered advisable to set up TV experiments of short duration in small communities not regularly served by that medium.

The major interest of Wa Wa Ta was to link into a network, regional radio stations to enable rapid dissemination of informational material. For this purpose only audio receive ground terminals would be required. In the short term, four or five regional stations are planned, and in the long term twenty such stations are foreseen.

GOVERNMENT OF THE NORTHWEST TERRITORIES noted an interest in the extension of social services. Related material would be regionally originated and disseminated. Little interest was expressed in short term experimental programs.

General Observations

The limited number of ground terminals to be made available by DOC to project operators was of great concern. In view of high capital or leasing costs involved, as well as legal constraints on the operation of ground terminals, it was considered unlikely that project sponsors would wish to use their limited resources to provide such hardware. The wisdom of making such a major outlay for the ANIK-B space segment without ensuring the availability of sufficient ground terminals to fully exploit the potential of the satellite facility was questioned. It was also suggested that 12/14 GHz technology had been adequately proven by Hermes, thus the need for further similar experimentation with ANIK-B was questioned.

The question of aggregation of similar or related experimental projects was addressed. While the distance insensitivity of satellite communications was of course, granted, consensus indicated that aggregation might best be approached on a geographic basis.

Because the common carriers would likely be involved in the post-experimental, operational phases of continuing programs, it was urged that the carriers should be involved with DOC in the selection or evaluation of pilot projects. This is particularly important because some common carriers are under provincial jurisdiction.

DISCUSSION GROUP 4 - BROADCASTING APPLICATIONS - Club Room 4th Floor

L. Petrie (Chairman)	Inuit Tapirisat of Canada
M. Charbonneau	Ministère des Communications
R. Chang	Miller Communications Systems
K. Hancock	Canadian Cable Television Assoc.
P. Hunter	British Columbia Government
J. Jobin	Taqramuit Nipingat
A. Lyons	Canadian Broadcasting Corporation
J.W.B. Day (Animateur)	DOC/CRC
J. Young	DOC/HQ

DISCUSSION GROUP 4 - BROADCASTING APPLICATIONS

Chairman - L. Petrie Animateur - J.W.B. Day

BROADCASTING APPLICATIONS FOR ANIK B

Possible applications for Anik B were expressed by the following organizations:

1. Canadian Broadcasting Corporation (CBC)

   The CBC indicated a potential interest in Anik B for providing real time program material from a number of sites in Canada. Such program material could be inserted for example in the Nationsl News. CBC stated a requirement for 6 to 8 ground terminals for such an experiment and also a committment in usage of the satellite for a specific period of several hours each day.

2. Canadian Cable Television Association (CCTA)

   The CCTA is presently distributing Parliamentary proceeding in the Ottawa region. They would like to further extend the distribution to other locations in Canada and determine the potential interest by the public in such programs. The CCTA experiment using Anik B would require about 25 terminals located across Canada. Participation in Anik B is contingent upon prior use of Hermes in four communities across Canada. They desire the use of Anik B terminals for a period of about one year. If the Parliamentary proceedings were enthusiastically received by the public during the experiment, the CCTA were concerned that such a service be continued after Anik B.

3. Taqramiut Nipingat Inc. (TNI)

   TNI expressed interest in using Anik B for broadcasting radio and television programs in Northern Quebec. They indicated a desire for about six ground terminals. A project proposal is presently being generated and final requirements have not been definitely defined. A requirement for interactive communication system may be part of the experimental program. External financial support is required for their participation in the experimental program.

DISCUSSION GROUP 5 - COMMERCIAL PRIVATE-LINE DATA AND MESSAGE SERVICES AND ELECTRONIC MAIL
- Salon Rideau (3rd Floor)

A.A. Sophianopoulos (Chairman)	Canadian Telecom Carrier Assoc.
G. Chung-Yan	Ontario Government
G.R. Groome	CP Telecommunications
B. Haughton	Canadian Telecom Carrier Assoc.
W.D. Hindson	DOC/CRC
J.M. Letham	Manitoba Telephone
C. Loo	DOC/CRC
R.P. Lumsden	Taqramuit Nipingat
A. Miller	Miller Communications Systems Ltd.
B. Mitani	Teleglobe Canada
G.W. Plunkett	Energy, Mines & Resources
T. Simms	Post Office Department
D.A. Smith	Bell Canada
D. Weese	Telesat Canada
M.V. Patriarche (Animateur)	DOC/HQ
M.G. Fyfe	DOC/National Branch

DISCUSSION GROUP 5

COMMERCIAL PRIVATE-LINE DATA AND MESSAGE SERVICES AND ELECTRONIC MAIL

Chairman - A. Sophianopoulos Animateur - M.V. Patriarche

The discussion group on Commercial Private-Line Data and Message Services and Electronic Mail, met on 25 October, 1977 and was composed of 14 members representing the Common Carriers, Federal and Provincial Governments and other independent groups.

The meeting was opened by the chairman who addressed the participants and outlined the terms of reference of the group and identified the objectives that were expected to be achieved.

The various organizations were asked for comments of a general nature, if they agreed with the main objective which was the definitions of proposed projects and also if they had any strong opinions regarding the output and its presentations.

Immediately, concern was voiced regarding the cost of the various experiments to the participating organizations. Besides the actual costing other relevant concerns were introduced. Some of these were the $/unit bandwidth, availability of terminal equipment, rentals, time frame of the experiments and also equally as important the short interval available to prepare a proposal for submission to the Government by 31 January, 1978.

The Government Animateur Mr. M.J. Patriarche then explained in broad terms the possible magnitude of the costs, the risks involved and it was stated that the individual organizations that chose to invest in the program would stand to benefit.

Mr. R.N.E. Haughton of CTCA then asked for the floor and proposed that an assumption should be made that the costs will be attractive to the participants and that we should proceed outlining proposals on that basis. This was accepted and in turn all the participants were given an opportunity to present their program, outline their positions and also the expected pay-off of their individual experiment.

Mr. T. Simms of the Canada Post Office was first to outline his proposal. It involved the Post Office's activities in two fronts:

1. Command and Control of existing services.

2. Commercial services to be offered within the realm of the activities of the Post Office.

Mr. Chung Yan of the Province of Ontario then outlined an experiment regarding the Communications needs of this Province. Briefly he outlined a multi-point Administrative type of a network for multi-service purposes. These services will include teleconferencing, forest fire protection, environment control and emergency network etc. Most of these services were to be addressed to the remote areas of the Province. Some of the key points that the Government of Ontario was holding for were:

1. Cost effectiveness

2. Reliability

3. Versatility

Mr. J.M. Letham from Manitoba Telephone System outlined similar needs to those of the Province of Ontario and reiterated that his Province also was thinking of a multi-point multi-purpose network.

Subsequently Mr. A. Miller of Miller Communications System outlined a remote sensing inexpensive system to transmit to the centre of a big city a unidirectional stream of low speed data.

Mr. George Groome from Canadian Pacific Telecommunications outlined a scheme whereupon satellite earth stations would be established right on the premises of a customer, even at the hub of a big city such as Montreal and Toronto.

Mr. Gordon Plunkett of EMR/CCRS descirbed a multi-point system of High Volume Digital Data being dropped directly to the premises of the various customers.

Finally Mr. P. Lumsden representing the Inuit-Tapirisat of the Pronvince of Quebec outlined a network similar to that of the Province of Ontario. Since this network would be established in remote areas it had to be designed with no back-up capability. The services also to be carried by this network would be unique to the needs of the Inuit-Tapirisat people. At this time however only a broad outline was presented since work was still underway to define the detail requirements.

With this final presentation, discussions took place and an attempt was made to group experiments with similar characteristics and needs. The group finally considered four areas of involvement which are outlined in Appendix A of the minutes.

Before the meeting ended it was discussed and decided that DOC will coordinate the individual activities and proposals of the Federal and Provincial organizations and agencies and also the other independent organizations. The Canadian Telecommunications Carriers Association (CTCA) will poll and coordinate the activities of the Common Carriers. CTCA will circulate this report to its members requesting them to come forward with specific proposals by the end of January 1978, through CTCA HQ.

The meeting was thus closed and a resume was presented to the Plenary immediately afterwards.

APPENDIX A

1. POSTAL SYSTEM APPLICATIONS

   (a) System Control/Administration

   (b) Postal Services

2. MULTI PURPOSE ADMINISTRATIVE/OPERATIONAL MULTI POINT NETWORK

3. REMOTE DATA COLLECTION AND UNIDIRECTIONAL DIRECT TRANSMISSION TO CUSTOMER PREMISES

4. URBAN CENTRE TO URBAN CENTRE TRANSMISSION.

DISCUSSION GROUP 6 - TECHNICAL/TECHNOLOGICAL PROJECTS - Room 523

S.S. Haykin (Chairman)	McMaster University, Hamilton
N. Broten	National Research Council
D.E. Bellotti	Canadian Marconi Company
P.J.A. Hunter	Min. of Energy Transportation & Communications, B.C.
J.M. Letham	Manitoba Telephone
B. Mitani	Teleglobe Canada
J. Popelar	Energy Mines & Resources
D. Taylor	McMaster University
D. Weese	Telesat Canada
J.L. Yen	University of Toronto
W. Zenko	Canadian Marconi Company
P.P. Nuspl (Animateur)	DOC/CRC
R. Datta	DOC/CRC
J. Strickland	DOC/CRC

DISCUSSION GROUP 6

TECHNICAL/TECHNOLOGICAL PROJECTS

REPORT TO PLENARY SESSION

Chairman - Dr. S.S. Haykin Animateur - Dr. P.P. Nuspl

I. The Technical/Technological Projects group identified five specific projects:

1. Propagation Measurements: (Proposed by CRC and Telesat)

The problems of interest in this project include the statistical study of the effects of precipitation, including fading and deplorization. The special requirements include access to ANIK-B on a continuing-time basis. Also, early results are needed for use by Telesat in the design of the ANIK-C earth stations.

2. Applications to Radio Astronomy: (Proposed by NRC, University of Toronto, and EMR)

This is a scientific experiment in real-time interferometry for the study of quasars and for geophysical studies. A special feature of this project includes the use of phase coherent processing and a network of three to four earth stations to improve resolution. The project requires interfacing with users in the United States and also will need ANIK-B for extended periods.

3. TDMA System: (proposed by CRC)

This project concerns the design, development and evaluation of a medium-capacity TDMA earth station; however, a partner in the project has yet to be identified. The project includes an initial phase to assess technical feasibility. It is not expected to require the use of ANIK-B before 1979.

4. Digital TV: (Proposed by Canadian Marconi Company)

This project is aimed at the evaluation of quality and cost-effectiveness of digital techniques for the transmission of television signals. It is envisioned that use of the satellite will be on a short-time basis. The aim is to seek input from broadcasters with regard to the practical applicability of digital TV using a satellite network.

5. Testing of Earth Stations: (Proposed by Telesat)

This project will test stations designed for the ANIK-C system which will carry digital data at 91 Mb/s. The results of this project are needed for input into the ANIK-C system. Use of ANIK-B is expected to be on a short-term basis.

II. With regard to aggregation, the chairman reported that, because of the different aims and requirements of the various projects, further aggregation is not likely. However, there is some commonality in the requirements, high-speed digital modems operating at 45 to 90 Mb/s may be used by more than one project.

CHAIRMAN'S COMMENTS ON REPORTS OF THE DISCUSSION GROUPS

BY

N.G. DAVIES

I would first of all like to thank the groups for the serious approach they took to exploring the potential for pilot projects in their areas of interest. To a large extent the objectives which we set yesterday have been achieved. In commenting, I would like to consider the individual groups and then address four items of major common interest.

1. DISCUSSION GROUPS

a) Health

There appear to be good prospects for pilot projects in medical education and in medical support services with a component of consultation. Also there are groupings of interested individuals with mandates in these areas in Newfoundland, Ontario, Manitoba, and probably in other locations. There is, however, a need to resolve problems in the types of communications (duplex video, video with voice response, duplex audio, slow scan TV, etc.), the time duration appropriate for a pilot project and the question of raised expectations and the need to continue to provide the test services.

There appeared to be a requirement to meet again soon with others of the same interest.

b) Education

This group was more diffuse but identified six potential areas where satellite communications could be useful (college and university, community programming, remote education, part-time learning, adult training and development and native programs). Although DOC had advised provincial departments of the ANIK-B program, many agencies which could have been interested were not represented. It is now up to the groups that are interested in formulating a pilot project to establish contact with other groups. Perhaps if some educational projects appear at this time not to justify a dedicated allocation of resources, it is very likely that as these and other pilot projects develop some aggregation of components may be feasible.

A number of problems were raised but those likely to cause the greatest concern are the institutional barriers between different levels of education and the need to incorporate any pilot project into the annual funding cycle.

It will probably be necessary to hold additional smaller meetings to address particular interests and to formulate specific proposals and action plans.

c) Community Communications

Four groups (ITC, WA-WA-TE, ANCS and the Yukon) have identified major needs to provide communications with and among remote communities, while noting the shortage of funds to accomplish this. Any project would probably be implemented within a geographic region and should be phased into a long term plan to provide for a continuation of the service. In developing pilot projects in this area, it may also be necessary, as in the case of education projects, to follow development of other pilot projects and adapt the form of a community communications project so as to gain as much as possible from the available resources.

It is noted that for two of the projects there is need for only audio. This requirement may not have a large impact on the cost of terminals and it may be more economical, for the limited number of user terminals to be provided by DOC, for the terminals to be capable of receiving video and audio and transmitting audio.

d) Broadcasting Applications

There is good potential for two main pilot projects to develop in this area, one in which the CBC originates programs from a number of locations and another in which cable television companies receive live transmission of sessions of the House of Commons. Both of these projects can probably be funded adequately and the major problems will be the allocation of appropriate ground terminal facilities and satellite resources. A third project may develop in Nouveau Quebec but there are a multitude of communication needs here and a less obvious source of funding, and the project will have to be carefully thought out.

e) Commercial Services and Electronic Mail

Pilot projects in this area will develop from the needs of the common carriers and large users to test the implementation of a potential service. Interesting pilot projects are very likely to develop in the areas of electronic mail (between post offices), rapid deployment of data links and testing of components of future systems. The potential projects are quite well defined and financial resources are available. The major problems will occur as these projects are planned in detail.

f) Technological Projects

As foreseen at this time there are likely to be small pilot projects in long baseline interferometry, Time Division Multiple Access and digital transmission. There appears to be no potential, or need, to aggregate these projects. However, the discussion group could develop into

a user group to exchange information on the conduct and results of individual projects. It is very likely that these projects would be "fitted in" once resources have been allocated to major projects.

2. ITEMS OF COMMON INTEREST

a) Proposals

An early deadline for submission of proposals has been established because time is short and it is necessary to make discussions concrete. By submitting a proposal, you will provide DOC with a concept of what you are planning and we will be able to work with you to explore the potential fully. Even defining a problem is useful and it will be helpful to resolve as many problems as possible early in the program. We recognize that pilot projects will not all begin at the same time and that the definition of some projects, which will take place later in the program, will be much less specific than those that begin early. By submitting a proposal, you will be indicating that you are seriously interested in the program, and proposals received by the deadline will have priority for inclusion in the program.

While we expect the proposals to include consideration of how the proposed service can be provided operationally in the future, it can be expected that some pilot projects will raise the interest of the common carriers and they will begin work to see how the services could be implemented economically.

b) Aggregation of Pilot Projects

We have been surprised that the most logical aggregation of projects may be by region rather than by discipline. This is perhaps obvious now taking into account regional interests and the beam coverage of the satellite, but was not our initial concept. In order to explore this further, we will certainly be prepared to meet groups in a region to discuss the system capabilities and the mechanisms of implementing several pilot projects in a region. We will, however, ensure that there is not a duplication of pilot projects in different regions and that there is a coordination within disciplines in different regions.

c) Ground Terminals

Nearly all of the groups have identified availability of ground terminals as a serious problem. However, this is a very difficult problem to resolve in general and a more promising approach will be to address specific problems. In preparing your proposals, we would encourage you to identify as clearly as possible the required capability of the ground terminals and the desired locations to accomplish your project objectives. DOC will then consider, in consultation with the proposers, the total requirements and the alternatives, including aggregation and phasing of pilot projects. For some users we will investigate a mechanism for lease of additional terminals from Telesat.

Only by addressing specific proposals will we be able to determine the allocation of the DOC terminals (converted Hermes terminals) and the best approach to lease by users of additional terminals from Telesat.

d) Funding

Sources of funding will be a serious problem for many pilot projects. In fact, identification of funding may be a test of the ultimate viability of the proposed service. While DOC will not fund pilot projects, the project staff will be prepared to advise proposers, on the basis of experience with Hermes, and to work with proposers to develop a budget and an approach to potential funding sources.

3. CONCLUSION

After allowing time for questions from the floor, I will ask members of the project staff to lead a discussion on specific items related to the project implementation process.

PROJECT IMPLEMENTATION PROCESSES

PROPOSAL FORMAT, PLAN, PILOT PROJECT ORGANIZATION

BY

W.T. KERR

PILOT PROJECT PROPOSAL

1. Identification
   - Sponsor(s)
   - Manager
   - Contact

2. Background
   - Institutional mandate
   - Need for pilot project

3. Objectives
   - Purpose of pilot project - why will it be done

4. Operations Summary
   - What will be done
   - How - systems, programming
   - When - schedule
   - Where
   - Who will be involved

5. Evaluation Summary
   - Data to be gathered
   - Methodology to be used
   - Report(s)

6. Management
   - Organization to accomplish
   - Money and man-years

ANIK-B

PILOT PROJECT PLAN

1. Identification
   - Sponsor(s)
   - Manager
   - Contact

2. Background
   - Institutional mandate
   - Need for pilot project

3. Objectives - Purpose of pilot project - why will it be done

4. Milestone chart - a structed series of goals, showing start-date and end-date for each.

5. Pre-operations activities - preliminary activities required, field-work, simulation, training, licensing, legal aspects.

6. Operations:

   a) Systems description - modes of operation, terminal configurations, interconnection, distribution, other hardware.

   b) Content description - subjects, video, video + audio, data, live or tape, time periods, participants.

7. Contingency plans - activities in the event of satellite failure, satellite power reduction, terminal failure, pre-emption, experimental contingencies such as programming no-show, participant no-show, demand changes, etc.

8. Post-project plans - follow-on activities, retention or withdrawal of facilities and services, dealing with participant expectations, operational applications and plans.

9. Evaluation activities
   - evaluation objectives
   - methodology
   - design
   - results and reports
   - organization to accomplish

10. Management details
   - organization chart, responsibilities
   - funding (needs, sources, schedules)
   - people (identification, time-commitment)

ANIK-B

PILOT PROJECT ORGANIZATION

	General Admin.	Funding	Procurement	Accounts	Scheduling	Production	Operations	Evaluation	Reports
Sponsor - Funds - Philosophy - Scope									
Manager - Decisions - Commitments - Resources Allocation									
Co-ordinator	X	X	X	X	X				X
Technical Director			X				X		
Program Director			X		X	X	X		
Evaluator								X	X

SCHEDULING

BY

D.H. JELLY

REQUIRED INPUTS

TIME

1) START DATE
- paces all other activities
- particularly important for fiscal year funding
- does not have to be early 1979
- must be appropriate to the activity

2) DURATION
- must be appropriate for proving the viability of the service being investigated
- will determine the total resources required

3) NUMBER OF HOURS/WEEK
- determines the resources
- may be limited by,
  - total effort available
  - total time a specific audience can absorb

4) SPECIFIC HOURS
- must be convenient for the user in terms of
  - days of week, time of day
  - non-conflicting with other activities
- operational factors,
  - e.g. avoidance of overtime
  - availability of facilities

5) OVERHEAD TIME
- TERMINAL AND SYSTEM CHECKOUT
- at the beginning of each project
- DAILY SETUP
- at the beginning of each program

TERMINALS

1) TYPES, NUMBERS AND MODE OF OPERATION (e.g. TV, Voice, etc).

2) LOCATIONS

With the above inputs from project sponsors, provisional schedules will be developed. Conflicts will be resolved through an interactive process until a final schedule is negotiated to satisfy the needs of approved projects.

TECHNICAL FACTORS

BY

J.W.B. DAY

1. Role of Communications Systems Group

   a) Specification and development of DOC owned ground terminals,

   b) Overall definition of communications system for ANIK-B 12/14 GHz,

   c) Provide technical assistance in the development of Pilot Projects.

2. Based on experience with the Hermes experimental program, it is considered that the following factors are important:

   a) A technical consultant should be part of a Pilot Project organization to provide liaison with DOC on technical requirements of the Project,

   b) Particular care should be taken with respect to interface of ground terminals and other equipment to minimize operational problems,

   c) Sufficient time should be allowed (including satellite time) for system check-out when developing an operating schedule for a Pilot Project.

THE ROLE OF EVALUATION IN PROGRAM PLANNING

BY

A. CASEY-STAHMER

1. WHY EVALUATION?

In the HERMES communications experiments project I have encountered three types of philosophy regarding the role of evaluation in program planning:

i) evaluation means someone is looking over my shoulder to criticize what I am doing;

ii) evaluation means that extra work is laid out by the project, which detracts from the main purpose, that is, to get on with the job;

iii) evaluation helps me to answer questions I set out to explore, including:

a) what happened in the project and why did it happen?

b) what are long-range implications of the project?

c) what would I do differently in an operational system and why?

d) is it worthwhile to continue the project?

It will be hard to answer these questions by intuition only or by crystal-ball method. A quantitive and scientific data base for the decision point is particularly important, if we go back to the essence of the ANIK-B pilot programs, that is, to test if the services offered are operationally feasible and desirable. Planners and policy makers will have to depend on a sound evaluative basis to weigh all the pros and cons in the decision-making.

EVALUATION TO ASSIST IN MAKING THE DECISION ON FUTURE APPLICATIONS

2. SOME CONSIDERATIONS

Past experiences let us outline the following guidelines for project planning and evaluation:

i) Evaluation and program planning should go hand in hand from the beginning. Evaluation should not be considered an add-on (or a bureaucratic central-agency requirement);

ii) The initial objective setting phase is extremely important. Involve evaluations in it, so that you know that your project objectives are 'evaluatable'.

Consult in the objective setting process all groups/ individuals that will make the decision concerning the future of the service you are trying to test. Pay particular attention to those agencies/or individuals which will have to foot the bill for future service delivery. Without this consultation you may later on encounter the problem that you have not considered those questions which they need to have answered to make their decision;

iii) Have a series of 'rap sessions' with all concerned to establish project objectives. You will be surprised how different the more specific objectives of the various players are when you start putting them down on paper in concrete form. Also discuss your criteria upon which you will decide if the project met your expectations;

iv) These objectives do not have to stick with you till the end of the project. Changes and revisions of project goals can be expected in many projects while they are being further defined. However, if you start with an agreed upon set of objectives you know when, where and why changes in project direction occur;

v) Discuss and consult everyone who was involved in (ii) when you thank these changes are required and involve and consult with the evaluator. If you do not, you may find that the evaluator continues to collect information which is no longer relevant to your goals;

vi) Your evaluation needs to have its milestones correspondant to the project milestones so that the data collection will be orderly;

vii) The evaluation component in projects of the size and importance of the ANIK-B projects should have a person(s) whose prime and sole responsibility is evaluation;

viii) The evaluation needs to have the support of all project staff (this includes again those individuals and agencies discussed in (ii)). It is desirable to set up a 'group', 'board' or 'team' comprised of representatives of all project 'participants' (in its larger sense), so that the why and hows of the evaluation requirements are understood and supported.

3. DOC's ROLE IN THE ANIK-B EVALUATION

We will do our best to pass on the 'whys', 'how', 'what to do', and 'what not to do', which all of us experienced in the HERMES project and in other related projects. There will be reports, papers, etc. We will also arrange for personal meetings, discussions, teleconferences, etc., involving those who have had the hands-on experience and those who are embarking on ANIK-B.

4. CONCLUSION

Evaluation will be an important factor in achieving a major ANIK-B goal, that is to test if the pilot projects would be desirable and feasible in operational systems. The whole project is about the "DECISION" to go ahead, or not to go ahead, and in what form to go ahead. Evaluation will be a most important ally in making this decision.

PILOT PROJECT ACCEPTANCE PROCEDURE

BY

M.V. PATRIARCHE

Viewgraph No. 7, Pilot Project Proposal Acceptance Procedure

The "form of proposal" referred to in item 2 will be very similar to Annex C to the Information Kit mailed to meeting participants. With respect to item 4, DOC screening will include a detailed review by a wide-spectrum review committee (including subject-matter specialist input), and a final decision by a senior DOC Management Committee.

Viewgraph No. 8, Project Selection Guidelines (Preliminary)

The words given in this viewgraph are not yet finalized. They are presented here as an indication of the present DOC intentions. Further information will be provided with the proposal forms to be mailed at the end of November 1977.

ANIK B COMMUNICATIONS PROGRAM

PILOT PROJECT PROPOSAL ACCEPTANCE PROCEDURE

1. INDICATE INTEREST BY COMPLETING ANNEX C OF YOUR INFORMATION KIT "PRELIMINARY PROJECT OUTLINE" AND SENDING TO PROGRAM MANAGER.

2. DOC WILL PROVIDE FORM OF PROPOSAL REQUIRED BY 30 NOVEMBER 1977.

3. ALL PROPOSALS TO BE RECEIVED BY PROGRAM MANAGER BY 31 JANUARY 1978.

4. DOC WILL SCREEN PROPOSALS AND DETERMINE THE FIRST SET.

5. USERS TO BE ADVISED BY 31 MARCH 1978.

6. AGREEMENT TO BE SIGNED BY DOC AND APPROVED USERS.

   TARGET: 6 MONTHS BEFORE PROJECT START DATE.

VIEWGRAPH 7

ANIK B COMMUNICATIONS PROGRAM

PROJECT SELECTION GUIDELINES (PRELIMINARY)

* THE DEGREE TO WHICH THE PROJECT SATISFIES ONE OR MORE OF THE PROGRAM GOALS;
* THE PROBABILITY THAT, IN THE EVENT OF POSITIVE RESULTS, THE PILOT PROJECT CONTAINS ELEMENTS LIKELY TO FOSTER TRANSITION TO A NEW OR IMPROVED OPERATIONAL SERVICE;
* THE OPERATIONAL MANDATE OF THE PROPOSING ORGANIZATION AND THE DEGREE OF COMMITMENT APPARENT IN THE PROPOSAL;
* THE DEGREE OF INNOVATION APPARENT IN THE PROPOSAL;
* THE EXTENT TO WHICH OPERATIONAL AND TECHNICAL FEASIBILITY HAVE BEEN PREVIOUSLY DEMONSTRATED;
* THE INTEGRITY OF THE PROPOSAL WITH RESPECT TO ITS TECHNICAL PLAN, MANAGEMENT PLAN, EVALUATION PLAN, AND RESOURCES PLAN (HUMAN, FINANCIAL AND FACILITIES)
* THE FEASIBILITY OF INCORPORATING THE PROPOSED PILOT PROJECT INTO THE OPERATING SCHEDULE OF THE SATELLITE.

CHAIRMAN'S SUMMARY OF INFORMATION EXCHANGE MEETING RESULTS

BY

N.G. DAVIES

Referring to the objectives that we set ourselves at the beginning of the meeting, it is clear that we have achieved the most important immediate objectives. There has been, from our point of view, an extremely useful exchange of information and we have been very encouraged by your positive participation in the general sessions and the discussion groups. It was optimistic to expect development of specific concepts for pilot projects, but this has been possible in two or three cases. It is hoped that the other groups have better information to work with now and can begin to piece together the elements of a workable pilot project.

The discussion today has been very serious, and dwelled mainly on potential problem areas. Also, it is apparent that a great deal of effort is required to define and implement a pilot project. If experience with Hermes is any guide, the actual effort on each accepted project will exceed anything we would estimate at this point. However, there are also big rewards. ANIK-B offers a unique opportunity to demonstrate what can be done with high quality communications. Through the flexibility inherent in satellite communications, we can put together a complex system quickly and test its viability. The results of some of the large pilot projects will have a major impact on the structure of communications in Canada in the future.

ACTION PLAN FOLLOW-ON

BY

M.V. PATRIARCHE

Viewgraph No. 9, Action Plan Follow-On

So that DOC may be aware of their interest, potential ANIK B users should complete a "Preliminary Project Outline" (Annex C to the Information Kit) and send it to the Program Manager as soon as possible. Completion of this form implies no commitment on behalf of the user agency. Those whose mandate requires that they monitor the progress of the ANIK B Communications Program, but who do not wish to participate in active pilot projects, should so advise the Program Manager.

ANIK B COMMUNICATIONS PROGRAM

ACTION PLAN FOLLOW-ON

1. RECORD OF MEETING TO BE MAILED BY DOC TO EACH PARTICIPANT

2. PROPOSERS TO INDICATE INTEREST WITH "PRELIMINARY PROJECT OUTLINE"

3. DOC TO PROVIDE MONTHLY ONE-PAGE NEWSLETTER TO ALL PARTICIPANTS

4. WORKING GROUPS HOLD FOLLOW-UP MEETINGS AND CORRESPOND

5. DOC TO PROVIDE "FORM OF PROPOSAL" AT 30 NOVEMBER 1977

6. FURTHER CONSULTATION WITH DOC STAFF

VIEWGRAPH 9

CLOSING REMARKS

BY

N.G. DAVIES

I would like to thank everyone who has participated in this meeting for their cooperation in discussing what might be accomplished through ANIK-B. This meeting has been a first step in the development of user pilot projects and we in DOC look forward to working with potential users to define workable projects and in accomplishing them.

In closing, I would like to acknowledge the work of the logistics staff who have worked hard to organize the facilities for this meeting, keep it on schedule and provide the necessary supporting papers.

LIST OF PARTICIPANTS

ORGANIZATION & REPRESENTATIVES	ADDRESS
A. PROVINCIAL GOVERNMENT AGENCIES	
Northwest Territories	
Mr. Stewart Mr. N. MacPherson	Department of Planning & Program Evaluation Government of Northwest Territories, Yellowknife, Northwest Territories, X0E 1H0 403-992-7289
Yukon - Territorial Government	
Mr. W.S. Deacon	Director of Intergovernmental Affairs, Yukon Territorial Government, Box 2703, Whitehorse, Yukon Territory. 403-667-5642
Quebec - Ministry of Communications	
Mr. L. Leclerc Mr. M. Charbonneau	Coordinateur des expériences du STT, Ministère des Communications, 580 Grande Allee, est, Quebec, Quebec, G1H 1G5 418-643-1903
Ontario - Ministry of Government Services	
Mr. D.I. Towers Mr. G. Chung-Yan	Director, Telecommunication Services Branch, Ontario Ministry of Government Services, 5th Floor, 22 College St., Toronto, Ontario, M7A 1R3 416-965-0475
Ontario - Ontario Educational Communications Authority	
Mr. P. Bowers Mr. L. Lacroix	General Manager Operations Division, The Ontario Education Communications Authority, 2180 Yonge Street, Toronto, Ontario M4S 2C1 416-484-2621
Manitoba - Dept. of Consumer Corp. & Internal Services	
Mr. R. Starr	Director, Telecommunications Development Branch, Consumer Corporate and Internal Services, 1118 405 Broadway Ave., Winnipeg, Manitoba, R3C 0V5 204-944-2509

ORGANIZATION & REPRESENTATIVES	ADDRESS
Manitoba - Manitoba Telephone	
Mr. J. Letham	Planning Dept., Manitoba Telephone, 489 Empress St., Winnipeg, Manitoba 204-947-8369
Saskatchewan - Communications Secretariat	
Mr. R. Simpson	Communications Secretariat, Government of Saskatchewan, Credit Union Central Building, 2055 Albert St., Room 438, Regina, Saskatchewan, S4P 3S1 306-565-2048
Alberta - Government Telephones	
Mr. J. Thiessen	Staff Supervisor, Government & Regulatory Matters, Alberta Government Telephones, PO Box 2411, Edmonton, Alberta, P5J 2S4 403-425-4843
British Columbia - Min. of Energy Transportation and Communications	
Mr. P. Hunter	Ministry of Energy, Transport and Communications, System Development and Regulation Branch, Parliament Buildings, Victoria, British Columbia, V8V 1X4 604-387-6364
British Columbia - Distance Education Planning Group	
Mr. A. Kendall	Distance Education Planning Group, 200-545 West 10th Avenue, Vancouver, British Columbia V5Z 1K9 604-873-3936
Nova Scotia - Ministry of Communications	
Mr. D. Colville	Office of Communications Policy, Ministry of Communications, PO Box 701, Halifax, Nova Scotia, B3J 2T3 902-424-7678

ORGANIZATION & REPRESENTATIVES	ADDRESS
Newfoundland - Dept. of Transportation and Communications	
Mr. W. Rowsell	Dept. of Transportation & Communications, Government of Newfoundland and Labrador, Confederation Building, St. John's, Newfoundland, A1C 5T7

B. FEDERAL GOVERNMENT DEPARTMENTS

Public Service Commission	
Dr. M. Ryan	Secretariat Services, Public Service Commission, 300 Laurier Ave., Ottawa, Ontario, K1A 0M7 613-996-9451
Post Office Department	
Mr. T. Simms Mr. R.W. Rapley	A/Director, Systems Research & Development Branch, Post Office Department, Confederation Heights, Ottawa, Ontario, K1A 0B1 613-998-8572
Energy Mines & Resources	
Mr. J. Popelar Mr. G.W. Plunkett	Energy Mines & Resources, 717 Belfast Road, Ottawa, Ontario. 613-995-1210
National Research Council	
Mr. N. Broten	National Research Council, 100 Sussex Dr., Room 2065A, Ottawa, Ontario, K1A 0R6 613-593-6539
Health & Welfare Canada	
Dr. K. Butler	Health & Welfare Canada, Medical Service Branch, 19th Floor, Jeanne Mance Building, Tunney's Pasture, Ottawa, Ontario. 613-995-7374

ORGANIZATION & REPRESENTATIVES	ADDRESS
Indian and Northern Affairs	
Mr. H.B. Taylor Mr. J. MacDonald Mr. H.E. Wirth	Secretary, Committee on Northern Development, Department of Indian & Northern Affairs, 400 Laurier St., Room 333, Ottawa, Ontario. 613-995-9680
Secretary of State	
Mr. Y. Gauthier	Secretary of State, Program Co-Ord. & Analysis Directorate, 66 Slater St., Ottawa, Ontario. K1A OM5 613-992-9795

C. NATIVE SOCIETIES

Alberta Native Communications Society	
Mr. L. Desmeules Mr. W. Rodnicki	Executive Director, Alberta Native Communications Society, 11427 Jasper Avenue, Edmonton, Alberta. 403-482-5811
Inuit Tapirisat of Canada	
Ms. L. Green Ms. A. Palliser Mr. L. Petrie	Inuit Tapirisat of Canada, 222 Somerset St. W., 2nd Floor, Ottawa, Ontario. K2P 2G3 613-238-8181
Taqramuit Nipingat	
Mr. J. Jobin Mr. P. Lumsden	Taqramuit Nipingat, 376 Churchill Ave., Suite 201, Ottawa, Ontario, K1Z 5C3 613-722-0912
Wa Wa Ta Native Communications Society	
Ms. H. Hudson Mr. E. Daigle	Wa Wa Ta Native Communications Society, 409 Royal Trust Bldg., 116 Albert St., Ottawa, Ontario, K1P 5G3

ORGANIZATION & REPRESENTATIVES	ADDRESS
D. UNIVERSITIES AND TECHNOLOGY	
Memorial University, Newfoundland	
Dr. A.M. House Mr. K. Hauschildt Mr. C. McNamara Ms. J. Roberts Mr. D.B. Starcher	Associate Dean, Clinical Affairs for Telemedicine Group, Faculty of Medicine, Memorial University of Newfoundland, St. John's, Newfoundland, A1C 5S7 419-753-1200
University of Western Ontario	
Dr. L.S. Carey Dr. E.S. Russell	Chairman, Department of Diagnostic Radiology and Nuclear Medicine, University of Western Ontario, London, Ontario, N6A 5B9 519-673-3234
University of Manitoba	
Dr. Snidell	University of Manitoba, Winnipeg, Manitoba, R3T 2N2
McMaster University	
Dr. S.S. Haykin Mr. D. Taylor	McMaster University, 1280 Main St. West, Hamilton, Ontario, L8S 4L6 416-525-9140 X4291
University of Quebec	
Mr. J. Daniel Mr. M. Robin	Directeur de la Technologie Educative et de la Production Tele-Universite, Universite du Quebec, 3108 Chemin Sainte-Foy, Sainte-Foy, Quebec, G1X 1P8 418-657-2496
University of Toronto	
Dr. J.L. Yen	Department of Electrical Engineering, University of Toronto, Toronto, Ontario, M5S 1A4 416-978-8756
Athabasca University	
Mr. M. Richmond	Athabasca University, 14515 - 122 Avenue, Edmonton, Alberta, T5L 2W4 403-452-9990

ORGANIZATION & REPRESENTATIVES	ADDRESS
Canadian Marconi Company	
Mr. O.E. Bellotti Mr. W. Zenko	Canadian Marconi Company, 2442 Trenton Ave., Montreal, Quebec, H3P 1Y9 514-341-7630 X230
Miller Communications Systems	
Mr. A.D.D. Miller Mr. R.A. Chang	Miller Communications Systems Ltd., 39 Leacock Way, Kanata, Ontario. K2K 1T1 613-592-3020

E. COMMON CARRIERS

Canadian Telecommunications Carriers Association	
Mr. B. Haughton Mr. A.A. Sophianopoulis	Canadian Telecommunications Carriers Assoc. 700 - 1 Nicholas St., Ottawa, Ontario, K1N 7B7 613-238-3080
Bell Canada	
Mr. D. Smith	Bell Canada, Systems Planning, 160 Elgin St., 8th Floor Gold, Ottawa, Ontario. 613-239-4611
Teleglobe Canada	
Mr. B. Mitani	Teleglobe Canada, 680 Sherbrooke W, Montreal, Quebec, H3A 2S4 514-281-7780
CP Telecommunications	
Mr. G. Groome	Planning and Development, Canadian Pacific Telecommunications, 5th Floor, 740 Notre Dame St. W, Montreal, Quebec, H3C 3X6 514-285-6451
Telesat Canada	
Mr. B. Bonneza Mr. R.M. Lester Mr. J. Underhill Mr. D. Weese	Telesat Canada, 333 River Road, Vanier, Ontario, K1L 8B9 613-746-5920

ORGANIZATION & REPRESENTATIVES	ADDRESS
Maritime Telegraph & Telephone Co.	
Mr. M. Haider	Maritime Telegraph & Telephone Co., PO Box 880, Halifax, N.S. P3J 2W3

F. BROADCASTERS

Canadian Broadcasting Corp.	
Mr. A. Lyons	Canadian Broadcasting Corporation, 1500 Bronson Avenue, PO Box 8478, Ottawa, Ontario, K1G 3J5
Canadian Cable Television Association	
Mr. M. Hind-Smith Mr. K. Hancock	Canadian Cable Television Association, Suite 405, 85 Albert Street, Ottawa, Ontario, K1P 6A4. 613-232-2631

G. GUESTS

Canadian Broadcasting Corp.	
Mr. A.W. Johnson	Canadian Broadcasting Corporation, 1500 Bronson Avenue, PO Box 8478, Ottawa, Ontario, K1G 3J5

H. DEPARTMENT OF COMMUNICATIONS

Headquarters	
Hon Jeanne Sauve - Minister Mr. A. Lapointe - A/Deputy Minister Dr. J.H. Chapman - Assistant Deputy Minister Space Program Dr. C.A. Franklin - Director General Space Programs Mr. F. Vieni - Director General Personnel & Administration Mr. D. Ford Mr. J. Langlois Mr. M. Patriarche Mr. E.D. Rainboth Mr. V. Sahay Dr. C.D. Shepard Mr. M.G. Fyfe Mr. J. Young Ms. A. Casey-Stahmer Mr. D. Guay	Department of Communications, 300 Slater St., Ottawa, Ontario, K1A 0C8

ORGANIZATION & REPRESENTATIVES	ADDRESS
Ontario Regional Office	
Mr. J.G. Rolston	Ontario Regional Office, 55 St. Clair Ave. E, 9th Floor, Toronto, Ontario, M4T 1M2 416-966-6182
Central Regional Office	
Mr. A.A. Simpson	Central Regional Office, 2300 - One Lombard Place, Winnipeg, Manitoba, R3B 2Z8 204-985-2595
Pacific Regional Office	
Mr. J. Thwaites	Pacific Regional Office, 300 - 325 Granville, Vancouver, B.C. V6C 1S5 604-544-6261
Communications Research Centre	
Dr. B.C. Blevis - Director General Space Technology & Applications Ms. P. Beaton Mr. R. Datta Mr. N.G. Davies Mr. J.W.B. Day Mr. B. Hindson Mr. R.W. Huck Ms. D. Jelly Mr. W.T. Kerr Mr. C. Loo Mrs. G. Murphy Dr. P.P. Nuspl Mr. R.J. O'Connor Dr. D. Phillips Dr. J. Strickland Mr. G. Theriault Mr. R.K. Tiedemann	Communications Research Centre, Shirley Bay, PO Box 11490, Station H, Ottawa, Ontario, K2H 8S2