Catalogue no. 62F0014M
ISSN 2818-6370
ISBN 978-0-660-78662-9

Prices Analytical Series

Technical Guide for the Industrial Product Price Index

by Tshibangu Batubenga and Megan Kirby-McGregor

Release date: October 20, 2025

Statistics Canada Statistique Canada

Canada

How to obtain more information

For information about this product or the wide range of services and data available from Statistics Canada, visit our website, www.statcan.gc.ca.

You can also contact us by

Email at infostats@statcan.gc.ca

Telephone, from Monday to Friday, 8:30 a.m. to 4:30 p.m., at the following numbers:

- Statistical Information Service 1-800-263-1136
- National telecommunications device for the hearing impaired 1-800-363-7629
- Fax line 1-514-283-9350

Standards of service to the public

Statistics Canada is committed to serving its clients in a prompt, reliable and courteous manner. To this end, the Agency has developed standards of service which its employees observe in serving its clients. To obtain a copy of these service standards, please contact Statistics Canada toll-free at 1-800-263-1136. The service standards are also published on www.statcan.gc.ca under “Contact us” > “Standards of service to the public.”

Note of appreciation

Canada owes the success of its statistical system to a long-standing partnership between Statistics Canada, the citizens of Canada, its businesses, governments and other institutions. Accurate and timely statistical information could not be produced without their continued co-operation and goodwill.

Published by authority of the Minister responsible for Statistics Canada

© His Majesty the King in Right of Canada, as represented by the Minister of Industry, 2025

Use of this publication is governed by the Statistics Canada Open Licence Agreement.

An HTML version is also available.

Cette publication est aussi disponible en français.

Table of contents

1 Introduction **4**

2 Aggregation Structure **4**

2.1 Aggregation by the North American Product Classification System (NAPCS) 4

2.2 Aggregation by the North American Industry Classification system (NAICS) 6

3 Price Data **6**

3.1 Prices 6

3.2 Sampling Methodology and Data Sources 7

3.3 Errors and outliers 7

3.4 Imputations 7

3.5 Quality changes 7

3.6 Revisions 8

4 Basket update **8**

4.1 Basket weights 8

5 Index Estimation **9**

5.1 Calculation of elementary aggregates 9

5.2 Calculation of upper-level aggregates 10

References **11**

Appendix **12**

Technical Guide for the Industrial Product Price Index

by **Tshibangu Batubenga** and **Megan Kirby-McGregor**

1 Introduction

The Industrial Product Price Index (IPPI) measures monthly price changes for major products sold by manufacturers operating in Canada. Price movements of manufactured goods destined for both domestic and export consumption are covered by the IPPI, providing an important indicator of economic performance for the Canadian manufacturing sector. The primary function of the index is to support the Canadian System of Macroeconomic Accounts. In particular, the IPPI is used for deflation purposes in the calculation of monthly Gross Domestic Product (GDP) and the Supply and Use tables (SUT). The index is also of value in analytical studies of price formation and behaviour and can be used in the process of contract escalation.

The IPPI is primarily a product-based index but is also reorganized and aggregated according to industry classifications. Indexes grouped by product and by industry are published monthly, roughly three weeks after the reference month. These indexes are produced, analyzed, and released alongside the Raw Materials Price Index (RMPI).[1]

2 Aggregation Structure

2.1 Aggregation by the North American Product Classification System (NAPCS)

The indexes grouped by product are classified according to a variant of the North American Product Classification System (NAPCS).[2] The NAPCS is hierarchical and allows for a standardized and meaningful approach to collection, analysis, aggregation, and dissemination of data at multiple levels of detail.

At the top of the aggregation structure, the IPPI is classified into 22 major product groups which include, for example, motorized and recreational vehicles (P71), energy and petroleum products (P51), and fruit, vegetables, feed and other food products (P12).[3] In most cases, data collection and index aggregation begin at the 6-digit NAPCS level, while a small number of indexes are aggregated starting at the 7-digit NAPCS level. The depth of the aggregation addresses users' data requirements while ensuring robust sample sizes. Geographical subdivisions, representing the Atlantic, Quebec, Ontario, Prairie and British Columbia regions,[4] are included for some NAPCS on a case-by-case basis. Market subdivisions are also captured for certain NAPCS where prices are different for the domestic market and for the export market. The aggregations at the lowest level NAPCS code, combined with the geographical and market subdivisions, are referred to as the elementary aggregates (EA).

Figure 1 illustrates a simplified aggregation structure according to the NAPCS. Prices for one or multiple product specifications from each establishment sampled for the 6-digit NAPCS code are used to compute the EA. The indexes at the 6-digit NAPCS level are then aggregated to their respective parent at the 5-digit NAPCS level, and so on, up to the total IPPI. Figure 2 provides an example of the lower-level aggregation structure for a NAPCS code that has a geographical subdivision. Similarly, Figure 3 provides an example of a 6-digit NAPCS code with a market subdivision. For simplicity, higher-level aggregation has been omitted from Figures 2 and 3.[5]

1. The Raw Materials Price Index (RMPI) measures price changes for raw materials purchased for further processing by manufacturers operating in Canada. Collection for the IPPI and RMPI takes place using the same electronic questionnaire, and the RMPI is analyzed in tandem with the IPPI in The Daily article.
2. The IPPI by product is classified according to a variant of the North American Product Classification System (NAPCS). At the time of publishing this guide, the IPPI is derived from a variant of the NAPCS 2022 version 1.0 but undergoes regular version updates in accordance with the NAPCS evergreening revision process.
3. The IPPI uses a regrouping variant of the NAPCS. Each variant has its own codes at the section and/or group levels. For the IPPI, alphanumeric section codes begin with the letter P and regroup 3-digit NAPCS codes.
4. Geographical subdivisions representing the British Columbia Coast and Interior regions exist for a small number of lumber and other wood products.
5. A very small number of cases aggregate up from the 7-digit NAPCS level, instead of the 6-digit NAPCS level. In addition, a small number of price movements are captured for lumber and other wood products in the British Columbia Coast and Interior regions. These examples are omitted for simplicity.

Figure 1
Simplified aggregation structure for IPPI by product

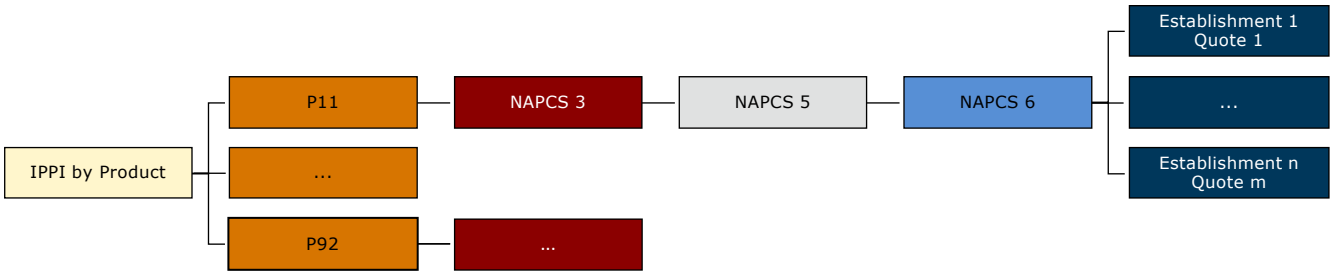

Source: Statistics Canada, Producer Prices program.

Figure 2
Simplified lower-level aggregation for a NAPCS code with a geographic subdivision

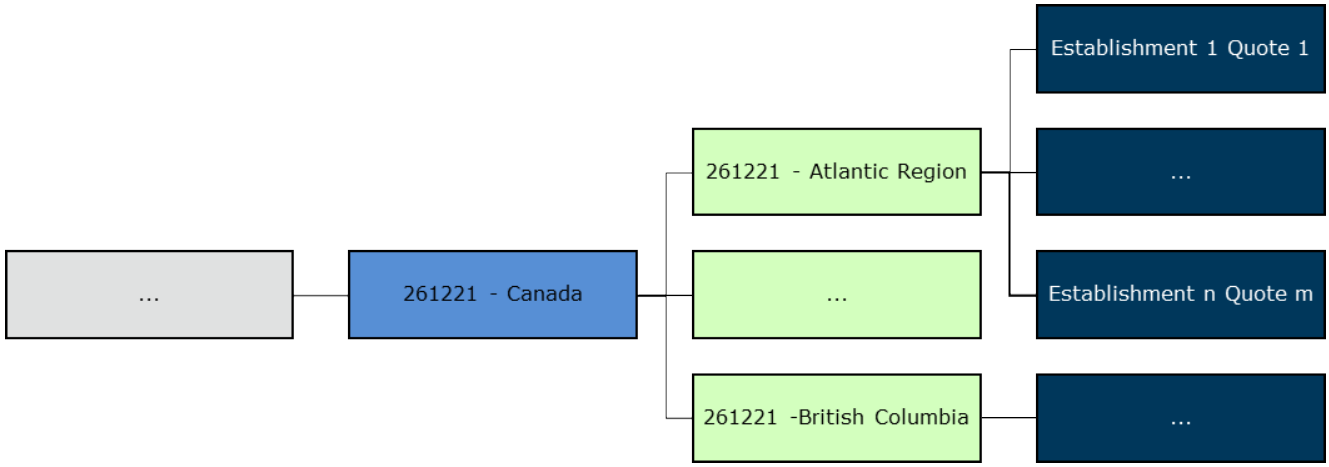

Source: Statistics Canada, Producer Prices program.

Figure 3
Simplified lower-level aggregation for a NAPCS code with a market subdivision

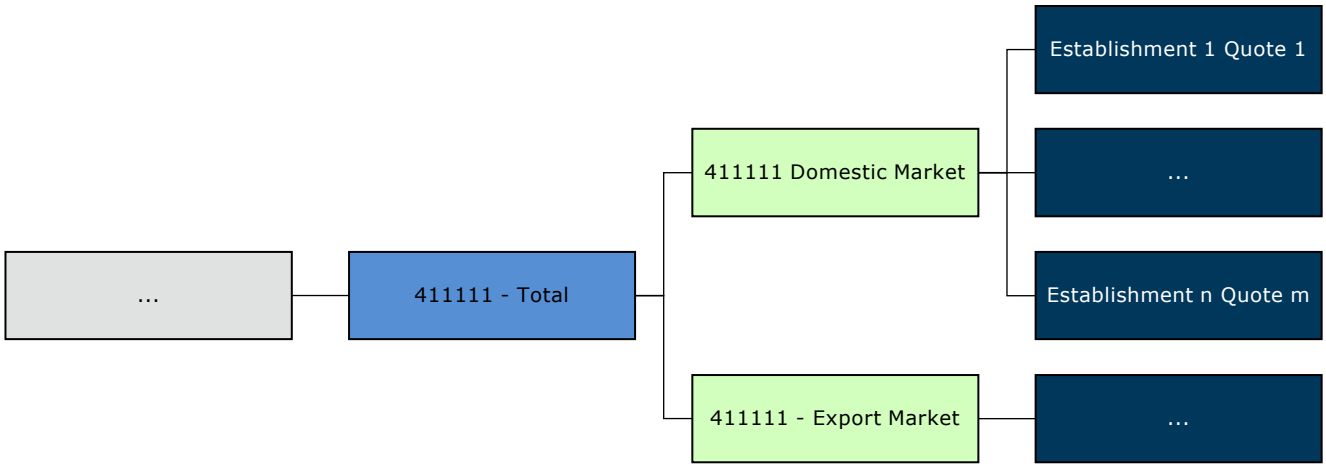

Source: Statistics Canada, Producer Prices program.

The IPPI by product is disseminated in the Common Output Data Repository starting at the 5-digit NAPCS level for most product groups. Lower-level aggregates are available upon request.

2.2 Aggregation by the North American Industry Classification system (NAICS)

The indexes grouped by industry are classified according to codes 31-33 of the North American Industry Classification system (NAICS).[6] As with the NAPCS, the NAICS provides a hierarchical structure for analysis and aggregation of the IPPI, beginning at the 6-digit Canadian industry level. At the 3-digit NAICS code level, subsectors include transportation equipment manufacturing (336), petroleum and coal product manufacturing (324), food manufacturing (311), and wood product manufacturing (321), among many others.

The IPPI by industry is derived by reaggregating 6-digit NAPCS indexes based on the correspondence between the NAPCS and the NAICS classifications. Multiple NAPCS can be associated to multiple NAICS, creating a many-to-many relationship. The index calculation begins at the 6-digit NAICS level, aggregating up to the 5-digit, 4-digit, and 3-digit levels, before reaching the overall manufacturing industry index. There is no geography subdivision for the NAICS indexes; they are Canada-level only. There is also no market subdivision. The aggregation structure according to the NAICS is presented in Figure 4.

Figure 4
Simplified aggregation structure for IPPI by industry

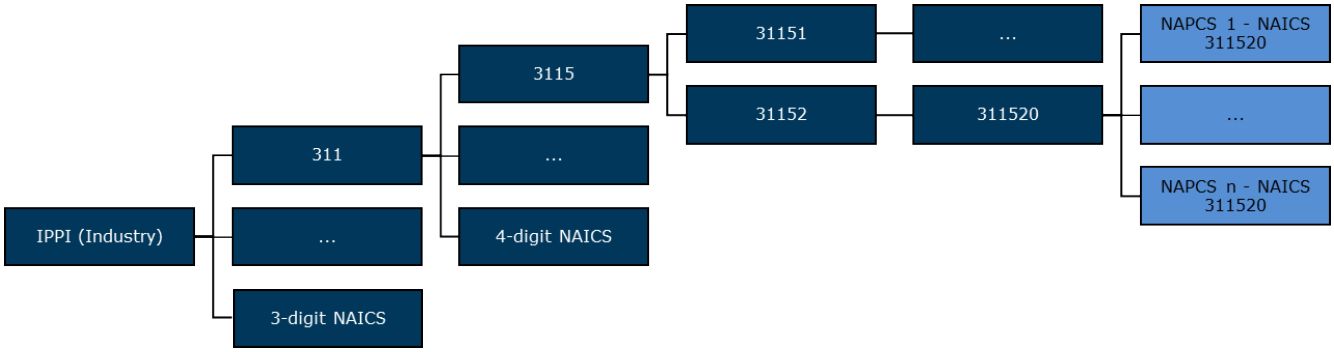

Source: Statistics Canada, Producer Prices program.

3 Price Data

3.1 Prices

The IPPI is an output producer price index. The prices collected to construct the index refer to what the producer receives, not what the purchaser pays. Prices collected are thus for goods sold at the factory gate and represent actual transaction prices, reflecting discounts and promotions if applicable. They exclude all indirect taxes such as sales taxes, customs duties and tariffs, as these amounts do not go to the factors of production (i.e. labour, capital, or profit). They also exclude any transportation service performed by a common carrier beyond the factory gate and any distribution services performed by the retail or wholesale trade industries.

The collection process takes place over a three-week period starting on the third week of the reference month. To ensure consistency, respondents report transaction prices as of the 10th of the month or the nearest business day. However, due to the high volatility of petroleum prices, respondents for petroleum products instead report monthly average prices.[7]

6. IPPI by industry is classified according to codes 31-33 of the North American Industry Classification system (NAICS). At the time of publishing this guide, the IPPI uses the NAICS Canada 2022 version 1.0, but as is the case with the product-based indexes, the aggregation structure is regularly updated to reflect the most recent NAICS revisions.
7. For each petroleum product, respondents are required to report the quantity sold (in kilolitres), the total revenue generated from that quantity, as well as the transaction price (in cents per litre), which is obtained by dividing the total revenue by the total quantity sold. This price serves as the primary input used in the calculation of the index.

3.2 Sampling Methodology and Data Sources

Price data for the IPPI are collected with a survey administered to a sample of establishments. The target population consists of all the manufacturing establishments residing and producing in Canada. Establishments are sampled in each EA, as defined in section 2.1 of this guide.[8] In most cases, the EA is the 6-digit NAPCS code. Sampling is based on the establishment's sales value for the NAPCS (and geography or market subdivision, where applicable) in the most recent Annual Survey of Manufacturing and Logging Industries (ASML) available. Each EA is sampled independently from other EAs.

Establishments are selected using probability-proportional-to-size sequential Poisson sampling (Ohlsson, 1998). This approach is particularly useful for handling establishments with varying sizes and importances. To minimize response burden, establishments with sales values in the bottom 10% are designated "take-none" and are removed prior to sample selection.

When the distribution of sales is highly skewed and a small number of establishments account for most of the value within the EA, establishments are categorized as either "take-none" or "take-all". This approach reduces response burden on smaller establishments, with minimal impact on the index. The cutoff criterion excludes approximately 10% of the sales at the lower end of the distribution within the EA but can vary based on the population characteristics and sample size requirements.

An establishment may be selected for multiple EAs. For each of these EAs, the establishment may report price quotes for multiple manufactured goods that are major revenue generators. The entire survey sample is usually reviewed once every 2-3 years. In the interim, resampling might occur for product groups subject to relatively rapid development in firm structure or product development, or lower response rates. This resampling is important to maintain the representativeness of the selected samples.

To reduce respondent burden and improve coverage for some products, the IPPI also incorporates alternative data sources. These sources include administrative data from Canadian provincial and federal governments, the United States Bureau of Labor Statistics (BLS), Bloomberg, and other third-party providers.

3.3 Errors and outliers

Reported price movements are analyzed to confirm their validity and to ensure they accurately reflect trends within the corresponding product categories. Outliers and incorrect prices are identified during the initial stage of data processing. Suspicious prices, for instance prices that do not fluctuate in accordance with the group trend, are also reviewed. If necessary, follow-ups are carried out with the respondents to ensure the appropriate information has been obtained.

3.4 Imputations

In most cases when a price is not reported, it is parentally imputed. In other words, the price change of the parent aggregate in the index aggregation structure is used to impute the price movement. Alternatively, where data are systematically missing, the movement of a different IPPI aggregate with a robust sample can be identified as a conceptually suitable substitute.

3.5 Quality changes

The index requires the same variety of a given product to be priced continually, with no change in the physical characteristics or terms of sale. In practice, it is not always possible to continue with an unchanged specification. When a product or its specifications change, the respondent is asked to report the price of the new product for both the reference month and the previous month. The price variation is then calculated by comparing the reference month's price with the previous month's price for the same product. If further assessment is required, additional information may be collected from the respondent to evaluate the impact.

8. Establishments are not sampled according to the industry classification. Rather, collected product-level data are used to calculate the NAPCS-based elementary aggregates, which are then concorded to the industry classification.

3.6 Revisions

The revision period of the index is six months, (e.g., when the July index is released, the index for January becomes final). This is to accommodate late reports, corrections, and some price quotes that are reported on a quarterly basis. Exceptions to this rule may occur, for example, following a basket update.

4 Basket update

The IPPI basket is updated periodically to keep the production pattern and industry structure up to date. A basket update includes a review of classifications and weight sources, a determination of the importance of products, and a review of index estimation. It may also include a resampling of establishments, but this may be carried out at a later stage in practice. There is typically a lag between the reference year and implementation of the basket update, to account for the delay in obtaining the data sources used to compute the basket weights.

4.1 Basket weights

Basket weights, used to aggregate the index, are derived from a combination of the Supply and Use tables (SUT) and data from the Annual Survey of Manufacturing and Logging Industries (ASML).

The SUTs are a reliable and high-quality data source that closely reflects actual economic transactions by industry. The SUTs are used to compute aggregation weights by summing the production value of a product across manufacturing industries. Weights are derived from the SUTs at the 5-digit NAPCS level. However, the product classification used in the SUTs does not reflect the level of detail of the 6 and 7-digit NAPCS codes used in the IPPI.

In contrast, the ASML collects sales values for goods produced by Canadian manufacturing establishments at the level of detail required for the IPPI.[9] The ASML is therefore used to disaggregate the values derived from the SUTs to the lowest levels of the aggregation structure.[10] The proportion of sales is computed for each EA relative to its parent. These proportions are then applied to the values derived from the SUTs, resulting in the IPPI basket weights. That is,

$$Z_k = \sum_j Z_k \eta_j = \sum_j w_j$$

where

Z_k is the weight of the 5-digit NAPCS k derived from the SUTs.

η_j is the proportion of the 5-digit NAPCS k's ASML sales values attributed to the 6-digit NAPCS j; $\sum_j \eta_j = 1$.

w_j is the weight of the 6-digit NAPCS j below the 5-digit parent NAPCS k.

Establishments in the ASML are also classified according to their primary industry and are used to derive aggregation weights by NAICS. The NAICS and NAPCS classifications share a many-to-many concordance, such that their total values as well as the sums within groups align.[11]

Administrative data are used to validate and adjust the basket weights, and to account for changes in the classification system, ensuring that the weights are representative of the contemporary economic landscape.

9. Establishment details from the ASML also allow for the derivation of aggregation weights for geographical subdivisions and for export and domestic subdivisions.
10. While the ASML is available at the lowest levels of the aggregation, it is subject to sampling and non-sampling error, as with any survey. These errors are minimized through careful design and validation processes, but the SUTs remain a more reliable weight source for the IPPI and are used to the extent possible.
11. This ensures that the overall manufacturing index aggregated according to the NAICS and the total IPPI by product aggregated according to the NAPCS are equivalent to each other at the top of the aggregation structure.

5 Index Estimation

The IPPI index estimation uses a two-stage aggregation approach. In the first stage, NAPCS-based EAs are calculated using a weighted geometric formula. In the second stage, a fixed-base arithmetic formula is applied to calculate upper aggregates using a price-updated weighting scheme.

5.1 Calculation of elementary aggregates

Weighted geometric elementary aggregates are calculated as follows:

$$EA_j^{t/t-1} = \prod_{i=1}^{N_j} \left(\frac{p_{j,i}^t}{p_{j,i}^{t-1}} \right)^{s_{j,i,b}^T}$$

where

$EA_j^{t/t-1}$ is the elementary aggregate j in period t.

N_j is the number of price quotes for EA j.

$\frac{p_{j,i}^t}{p_{j,i}^{t-1}}$ is the price relative between the current period t and the previous period $t-1$ for EA j's price quote i

$s_{j,i,b}^T$ is a function of establishment b's output share in the sample reference year T for EA j's price quote i.

Specifically, $s_{j,i,b}^T$ is calculated as

$$s_{j,i,b}^T = \alpha_{j,i,b} \sigma_{j,b}^T$$

where $\sigma_{j,b}^T$ is establishment b's output share in category j in sample reference year T, and

$$\sum_i \alpha_{j,i,b} = 1, \text{ with } \alpha_{j,i,b} > 0 \; \forall j,i,b$$

For most establishments, $\alpha_{j,i,b} = \frac{1}{n_{j,b}}$, where $n_{j,b}$ is the number of quotes reported by establishment b for EA j. Some establishments use an uneven split of output share for their quote weights, depending on the availability of product-specific quantity information.

The output share $\sigma_{j,b}^T$ is calculated as

$$_{j,b}^{T} = \frac{d_{j,b}^T r_{j,b}^T}{\sum_{c \in X_j^T} d_{j,c}^T r_{j,c}^T}$$

where

$d_{j,b}^T$ is the design weight of establishment b in category j for the sample whose reference year is T, the reciprocal of its sampling probability.

$r_{j,b}^T$ is the revenue of establishment b in category j reported in the ASML for sample reference year T.

X_j^T is the sample of establishments drawn for category j for the sample whose reference year is T.

5.2 Calculation of upper-level aggregates

At higher levels of aggregation, the index is computed using the period-to-period price relatives directly below it.

$$I_k^t = I_k^{t-1} \sum_{j=1}^{m} w_j^t EA_j^{t/t-1} = I_k^{t-1} \sum_{j=1}^{m} w_j^t \prod_{i=1}^{N_j} \left(\frac{p_{j,i}^t}{p_{j,i}^{t-1}} \right)^{s_{j,i,b}^T}$$

$$w_j^0 = w_j^1$$

$$w_j^t = \frac{w_j^{t-1} EA_j^{t-1/t-2}}{\sum_{l=1}^{m} w_l^{t-1} EA_l^{t-1/t-2}}, \quad t \geq 2$$

where

m is the number of elementary aggregates in the aggregation

I_k^t is the fixed-base arithmetic index k in period t.

I_k^{t-1} is the fixed-base arithmetic index k in period $t-1$.

w_j^0, w_j^1 are the initial weights for product or industry j.

w_j^t is the price-updated weight for product or industry j in period t.

References

Ohlsson, E. (1998). Sequential Poisson Sampling. Journal of Official Statistics, Vol. 14, No. 2, 149-162.

Appendix

Table 1
Concepts and definitions

Concept	Definition
Base period	The period for which the index is set to 100 relative to other periods.
Basket	Refers to the list of goods whose prices are monitored over time to measure changes in the overall price of goods manufactured in Canada. This basket is designed to accurately reflect the production structure of the industrial sector, with its components weighted based on their relative economic importance.
Basket update	The process of updating the weights of the index components and recalculating the index based on these updated weights. Often, a new sample, updated classification systems, and methodological improvements are also introduced to maintain the index's accuracy and relevance.
Contract escalation	Contract escalation involves adjusting sales and purchase contracts and agreements to take changes in the cost of satisfying such a contract into account. Price adjustment clauses are most often incorporated into long-term contracts, wherein the price of inputs, labour, or otherwise is expected to change over the length of the contract.
Elementary aggregate (EA)	The lowest level of the index aggregation for which value data (weights) are available. For the IPPI by product, an EA is at the 6-digit (sometimes 7-digit) NAPCS level and can include a market or geographical subdivision. For the IPPI by industry, the lowest level of the aggregation corresponds to the 6-digit NAICS level, which is constructed using one or many aggregates from corresponding 6-digit NAPCS codes.
Establishment	The smallest unit that is a separate operating entity capable of reporting all elements of basic industrial statistics relating to input and output. It is typically a factory, assembly plant, or similar unit, and in most cases, it is a separate company.
IPPI	Industrial Product Price Index.
Price	The IPPI is an output price index that measures the prices of goods manufactured in Canada at the factory gate.
Price-updated weights	Price updating is a procedure where the quantities of an earlier period are revalued at the prices of a later period. The result is hybrid revenue weights.
Reference month	The specific month during which product prices are collected and the index is calculated. It indicates the time period the data reflect.
Sample update	The process of selecting establishments from which price data will be collected to measure price changes over time. This can be done during the basket update process, or periodically to top-up EAs with insufficient sample sizes.
Target population	Manufacturing establishments residing and producing in Canada.
Weight reference year	The year from which the basket weights are derived.

Source: Statistics Canada, Producer Prices program.