CAN/CGSB-12.1-2026
Supersedes CAN/CGSB-12.1-2022

Safety glazing

Developed by the Canadian General Standards Board

Canada

SCC CCN

Canadian General Standards Board statement

The CANADIAN GENERAL STANDARDS BOARD (CGSB), under whose auspices this standard has been developed, is a government directorate within Public Services and Procurement Canada. CGSB is engaged in the production of voluntary standards in a wide range of subject areas through the media of standards committees and the consensus process. The standards committees are composed of representatives of relevant interests including producers, consumers and other users, retailers, governments, educational institutions, technical, professional and trade societies, and research and testing organizations. Any given standard is developed on the consensus of views expressed by such representatives.

CGSB has been accredited by the Standards Council of Canada as a national Standards Development Organization. The standards that CGSB develops and offers as National Standards of Canada conform to the requirements and guidance established for this purpose by the Standards Council of Canada. In addition to standards it publishes as National Standards of Canada, CGSB may produce other deliverables that meet particular needs, in response to requests from a variety of sources in both the public and private sectors. CGSB standards and CGSB's National standards are developed in conformance with the policies described in the CGSB Policy and Procedures Manual for the Development and Maintenance of standards.

CGSB's standards are subject to review and revision to ensure that they keep abreast of technological progress. CGSB will review and publish this standard on a schedule not to exceed five years from the date of publication. Suggestions for their improvement, which are always welcome, should be brought to the notice of the standards committees concerned. Changes to standards may be issued as amendments or as new editions of standards.

An up-to-date listing of CGSB's standards, including details on latest issues and amendments, is found in the CGSB Catalogue at the following website, https://www.canada.ca/en/public-services-procurement/services/standards-oversight/canadian-general-standards-board/development-services/catalogue.html, along with more information about CGSB products and services.

Although the intended primary application of this standard is stated in its scope, it is important to note that it remains the responsibility of the users of the standard to judge its suitability for their particular purpose.

The testing and evaluations of a product or service against this standard may require the use of materials and/or equipment that could be hazardous. This standard does not purport to address all the safety aspects associated with its use. Anyone using this standard has the responsibility to consult the appropriate authorities and to establish appropriate health and safety practices in conjunction with any applicable regulatory requirements prior to its use. CGSB neither assumes nor accepts any responsibility for any injury or damage that may occur during or as the result of tests, wherever performed.

Attention is drawn to the possibility that some of the elements of this standard may be subject of patents right. CGSB shall not be held responsible for identifying any or all such patent rights. Users of this standard are expressly advised that determination of the validity of any such patent rights is entirely their own responsibility.

For enforcement purposes, standards shall be considered published the final day of the month of their publication date.

Contact the Canadian General Standards Board

To obtain information on CGSB, its services and standards or to obtain CGSB publications, please contact us:

Web	https://www.tpsgc-pwgsc.gc.ca/ongc-cgsb/index-eng.html
Email	ncr.cgsb-ongc@tpsgc-pwgsc.gc.ca
Telephone	1-800-665-2472
Mail	Canadian General Standards Board 140 O'Connor Street, Tower East Ottawa, Ontario Canada K1A 0S5

Standards Council of Canada statement

A National Standard of Canada is a standard developed by a Standards Council of Canada (SCC) accredited Standards Development Organization, in compliance with requirements and guidance set out by SCC. More information on National Standards of Canada can be found at https://scc-ccn.ca/.

SCC is a Crown corporation within the portfolio of Innovation, Science and Economic Development (ISED) Canada. With the goal of enhancing Canada's economic competitiveness and social well-being, SCC leads and facilitates the development and use of national and international standards. SCC also coordinates Canadian participation in standards development, and identifies strategies to advance Canadian standardization efforts.

Accreditation services are provided by SCC to various customers, including product certifiers, testing laboratories, and standards development organisations. A list of SCC programs and accredited bodies is publicly available at https://scc-ccn.ca/.

CAN/CGSB-12.1-2026
Supersedes CAN/CGSB-12.1-2022

Safety glazing

This standard was developed by the Canadian General Standards Board and published in March 2026.

ICS 81.040.20

ISBN 978-0-660-98827-6

Catalogue number: P29-012-001-2026E-PDF

CETTE NORME NATIONALE DU CANADA EST DISPONIBLE EN VERSIONS FRANÇAISE ET ANGLAISE. La version française de la présente norme est intitulée *Vitrage de sécurité*.

© HIS MAJESTY THE KING IN RIGHT OF CANADA, as represented by the Minister of Public Services and Procurement Canada, the Minister responsible for the Canadian General Standards Board (2026).

No part of this publication may be reproduced in any form without the prior permission of the publisher.

Canadian General Standards Board

Committee on Glass

(Voting membership at date of Ballot)

Chair

Margaret Webb	Consultant (General)

General interest category

Adrian Edge	Fenestration Canada
Alex Hayes	National Research Council Canada
Courtney Calahoo	R&D Associate Glass Division
Doug Perovic	University of Toronto
George Torok	Stantec Consulting Ltd.
Mathieu Audet	Association de vitrerie et de fenestration du Québec (AVFQ)

Producer category

Amy Roberts	Fenestration and Glazing Industry Alliance (FGIA)
Julia Schimmelpenningh	Eastman Chemical Company
Kyle Cartwright	Westeck Windows and Doors
Michael Liversidge	Precision Glass Services Inc.
Ray Wakefield	Trulite Glass and Aluminum Solutions Canada ULC
Thomas Zaremba	Alliance of Primary Fire Rated Glazing Manufacturers

Regulator category

Mike Hill	Government of Alberta – Municipal Affairs
Nicholas Shipley	Health Canada

User category

Andrew Crosby	Read Jones Christoffersen Ltd.
Brent Harder	Ferguson Corporation
Brian Peters	Float Engineering Inc.
David Vadocz	RDH Building Science Inc.
Jack Mantyla	Canadian Home Builders' Association (CHBA)
Mark Brook	BVDA Façade Engineering Inc.
Mike Harpell	Salient Engineering
Simone Panziera	Thinkform Architecture + Interiors

Committee manager (non-voting)

Sohaila Moghadam	Canadian General Standards Board

Translation of this National Standard of Canada was conducted by the Government of Canada

© CGSB 2026 – All rights reserved

Preface

This National Standard of Canada CAN/CGSB-12.1-2026 *Safety glazing* supersedes the 2022 edition.

Changes since the previous edition

- Expanded classifications to include a section on vacuum insulating glass (VIG).
- Various editorial fixes related to the CGSB Style Manual.
- Sections on testing method description were replaced with references to the appropriate ASTM standard to better harmonize with ANSI Z97.1 *Safety Glazing Materials Used in Buildings – Safety Performance Specifications and Methods of Test*.
- Normative references were updated and bibliography was added.
- Annex B was added to consider the climate resiliency on glass when exposed to extreme conditions and related to climate change.

The following definitions apply in understanding how to implement this National Standard of Canada:

- “shall” indicates a **requirement**;
- “should” indicates a **recommendation**;
- “may” is used to indicate that something is **permitted**;
- “can” is used to indicate that something is **possible**, for example, that an organization is able to do something.

Notes accompanying clauses do not include requirements or alternative requirements. The purpose of a note accompanying a clause is to separate explanatory or informative material from the text. Annexes are designated normative (mandatory) or informative (non-mandatory) to define their application.

© CGSB 2026 – All rights reserved

Table of contents Page

1 Scope 1
2 Normative references 1
3 Terms and definitions 2
4 Classification 4
5 General requirements 5
6 Detailed requirements 5
7 Packaging, packing, labelling and marking 7
8 Inspection 8
9 Sampling 8
10 Testing 9
Annex A (informative) Areas of human impact 31
Annex B (informative) Climate Resiliency 32
Bibliography 36

Figures

Figure 1 ─ Impact test structure 20
Figure 2 ─ Impact test frame ─ Front view 21
Figure 3 ─ Detail of section A-A properly clamped test specimen [> 3 mm (1/8 in.)] .. 22
Figure 4 ─ Detail of section A-A improperly clamped test specimen [>3 mm (1/8 in.)]23
Figure 5 ─ Impact test frame – Side view 24
Figure 6 ─ Impact test frame – Bent glazing – Front view 25
Figure 7 ─ Detail of section B-B 26
Figure 8 ─ Detail of stablection C-C 27
Figure 9 – Detail of section D-D 27
Figure 10 ─ Bent glass impact test frame (Exploded view) 28
Figure 11 ─ Impact test frame ─ Bent glazing ─ Side view – Section D-D 29
Figure 12 ─ Impactor 30
Figure 13 ─ Centre punch fragmentation 30

© CGSB 2026 – All rights reserved

Tables

Table 1 ─ Grouping of tests for different glazing materials 9
Table 2 ─ Applicable interpretation of results for shot bag impact 13
Table B.1 ─ Climate Resiliency Potential Impacts 33

© CGSB 2026 – All rights reserved

Introduction

The original edition of CAN/CGSB-12.1 was specific to tempered and laminated safety glass. The objectives of the CGSB Committee on Glass with the 2026 edition are to:

a) clearly define safety glass and its product categories;

b) harmonize as much as possible with the American National Standard Institute document ANSI Z97.1 *Safety Glazing Materials Used in Buildings – Safety Performance Specifications and Methods of Test*;

c) update the standard to address technologies and products introduced into the market;

d) ensure that this standard is applicable to Canadian building practices and compliant with the National Building Code of Canada; and

e) to address climate resiliency and the potential for the use of safety glazing products in more applications due to extreme weather events.

To facilitate the above objectives, the CGSB Committee on Glass had representation from all the safety glazing product manufacturing sectors, representatives from the ANSI Z97.1 committee, as well as representation from other sectors to ensure the required committee balance.

There are third party testing and certification programs that verify compliance to the standard[1]. Manufacturers may find it beneficial to obtain a certification through one of these available programs.

Canada has been experiencing the effects of climate change which have impacted the various regions and ecosystems including increased wildfires, flooding, increased winds and other extreme events. It is recommended that users of this standard review conditions for their environment as there may be a need for additional uses of safety glazing. For additional guidance on climate resiliency, refer to Annex B.

The scope, application and labelling requirements of CAN/CGSB-12.1 and ANSI Z97.1 continue to be harmonized, including product categories and tests.

Acknowledgment is extended to the members of the ANSI Z97.1 committee for working so closely with the CGSB Committee on Glass. Their assistance in providing access to the ANSI Z97.1 standard and any background information needed was essential to the development of this standard.

[1] At the time of publishing, available third-party testing and certification programs include the Safety Glazing Certification Council (SGCC) www.sgcc.com. Other similar, third-party programs may also be available. Safety Glazing product testing is offered by Intertek www.intertek.com and UL Solutions of Canada https://canada.ul.com.

© CGSB 2026 – All rights reserved

Safety glazing

1 Scope

This National Standard of Canada applies to glazing materials that have been subjected to the test methods described herein. These test methods establish the minimum performance requirement intended to reduce the risk of cutting or piercing injuries when glazing materials installed in human impact areas (see Annex A) fracture.

This standard does not address the strength, durability, fire rated characteristics, appearance or methods of installation for glazing materials.

The following are not considered safety-glazing materials under this standard: monolithic annealed glass, monolithic ceramic glass, monolithic heat strengthened glass, monolithic wired glass (not fire rated) and monolithic fire rated wired glass. Monolithic chemically manufactured glass is also not considered safety-glazing unless it has been specifically engineered to comply with the requirements of this standard.

Some quantities and dimensions used in this standard are given in metric units from the International System of Units (SI units). SI units with inch-pound (IP) equivalents are shown in brackets, where appropriate. All IP measurements are industry standard nominal measurements. All SI references are closest conversions to industry standard, and, unless otherwise specified, have been rounded to the nearest appropriate unit. Unless otherwise stated, standard industry tolerances apply. In the event of a dispute, the IP equivalents are regarded as being official.

The testing and evaluation of a product against this standard may require the use of materials and/or equipment that could be hazardous. This document does not purport to address all the safety aspects associated with its use. Anyone using this standard has the responsibility to consult the appropriate authorities and to establish appropriate health and safety practices in conjunction with any applicable regulatory requirements prior to its use.

2 Normative references

The following normative documents contain provisions that, through reference in this text, constitute provisions of this National Standard of Canada. The referenced documents may be obtained from the sources noted below.

Note: The contact information provided below was valid at the date of publication of this standard.

An undated reference is to the latest edition or revision of the reference or document in question, unless otherwise specified by the authority applying this standard. A dated reference is to the specified revision or edition of the reference or document in question.

2.1 American National Standards Institute (ANSI)

ANSI Z97.1 — *Safety Glazing Materials Used in Buildings — Safety Performance Specifications and Methods of Test*

2.1.1 Contact information

The above may be obtained from the Copyright Accredited Standards Committee (ASC) Z97. Telephone: 785-271-0208. Web site: https://www.ansiz97.com/.

2.2 ASTM International

ASTM C1036 — *Standard Specification for Flat Glass*

ASTM C1048 — *Standard Specification for Heat-Strengthened and Fully Tempered Flat Glass.*

© CGSB 2026 – All rights reserved

ASTM C1172 — *Standard Specification for Laminated Architectural Flat Glass.*

ASTM C1349 — *Standard Specification for Architectural Flat Glass Clad Polycarbonate*

ASTM C1503 — *Standard Specification for Silvered Flat Glass Mirror*

ASTM C1900 – *Standard Practice for Weathering and Evaluation of Laminated Glass*

ASTM C1914 - *Standard Test Method for Bake and Boil Testing of Laminated Glass*

ASTM D785 — *Standard Test Method for Rockwell Hardness of Plastics and Electrical Insulating Materials*

ASTM D790 — *Standard Test Methods for Flexural Properties of Unreinforced and Reinforced Plastics and Electrical Insulating Materials*

ASTM D1003 — *Standard Test Method for Haze and Luminous Transmittance of Transparent Plastics*

ASTM D2240 — *Standard Test Method for Rubber Property − Durometer Hardness*

ASTM D2244 — *Standard Practice for Calculation of Color Tolerances and Color Differences from instrumentally Measured Color Coordinates*

ASTM D6110 — *Standard Test Method for Determining the Charpy Impact Resistance of Notched Specimens of Plastics*

ASTM E308 — *Standard Practice for Computing the Colors of Objects by Using the CIE System*

ASTM E313 — *Standard Practice for Calculating Yellowness and Whiteness Indices from Instrumentally Measured Color Coordinates*

ASTM E903 — *Standard Test Method for Solar Absorptance, Reflectance, and Transmittance of Materials Using Integrating Spheres*

2.2.1 Contact information

The above may be obtained from ASTM International. Telephone: 610-832-9585. Web site: www.astm.org. They can also be obtained from Standards Store by Accuris. Telephone: 613-237-4250 or 1-800-267-8220. Web site: https://store.accuristech.com/.

3 Terms and definitions

For the purposes of this National Standard of Canada, the following terms and definitions apply.

2-ply glass laminates
laminated glazing consisting of two sheets of glass bonded together with an interlayer.

asymmetric material
glazing in which component layers of its construction makeup are different in thickness, kind, type or pattern texture about its interlayer or film and/or central plane surface.

bent glass
flat glass that has been shaped while hot into a form that has curved surfaces.

bubble
visible gas pocket in the interlayer material or in the plastic glazing sheet material, or between the interlayer and another layer of glass or plastic glazing sheet material.

© CGSB 2026 – All rights reserved

crack-free particle
portion of a broken test specimen that is determined by identifying the smallest possible perimeter around all points in the portion of the broken test specimen, always passing along un-separated cracks or exposed surfaces.

cracking
visible breaking, splitting or fissuring, either partially or completely through the thickness of an individual layer of material.

crazing
visible breaking, splitting or fissuring of a material, typically patterned with a network of fine lines that do not penetrate through the thickness of an individual layer of material.

delamination
condition in which one of the glass or plastic glazing sheet material layers loses its bond to an interlayer and separates physically.

discoloration
noticeable chemical or process induced colour deviation in the appearance of a material that is visible to the unaided or corrected eye.

glass/plastic laminates
laminated glazing consisting of one or more layers of glass and one or more layers of plastic glazing sheet material bonded together with one or more interlayer(s) in which the plastic surface faces inward or toward an insulating cavity, when the glazing is installed in a structure.

laminated glazing
manufactured assembly consisting of at least one sheet of glass or glass-ceramic bonded to at least one other sheet of glass, glass-ceramic or plastic glazing material with an organic interlayer.

Note 1: For plastics laminated to plastics, see plastic glazing material.

Note 2: When broken, numerous cracks appear, but glass fragments tend to adhere to the interlayer. See ASTM C1172 *Standard Specification for Laminated Architectural Flat Glass* for additional information.

mirror glazing
architectural glazing materials whose intended use is based on their reflective quality. These materials are composed of a reflective surface and may have a substrate of glass, or plastic.

multi-ply glass laminates
laminated glazing consisting of more than two layers of glass and/or plastic glazing sheet material bonded together by interlayers, where both of the outer surfaces are glass.

organic coated glass
assembly consisting of a sheet of glass covered on one or both surfaces with either: 1) an adhesive-applied organic film or sheeting, or 2) an applied coating. When broken, numerous cracks appear, but the glass fragments tend to adhere to the applied organic material.

plastic glazing material
single sheet of synthetic plastic material, a combination of two or more such sheets laminated together, or a combination of plastic material and reinforcement material in the form of fibres or flakes. This material contains, as an essential ingredient, an organic substance of large molecular weight; is solid in its finished state; and, at some stage in its manufacture or in its processing into finished articles, can be shaped by flow. See ASTM C1349 *Standard Specification for Architectural Flat Glass Clad Polycarbonate* for additional information.

© CGSB 2026 – All rights reserved

safety glazing materials
glazing materials so constructed, treated, or combined with other materials that, if broken by human contact, the likelihood of cutting or piercing injuries that might result from such contact is reduced.

tempered glass
glass of any shape that has been subjected to a thermal treatment process characterized by uniform heating followed by rapid uniform cooling to produce compressively stressed surface layers.

Note: For the purposes of this standard, tempered glass refers to fully tempered glass pursuant to ASTM C1048 *Standard Specification for Heat-Strengthened and Fully Tempered Flat Glass*. See 4.2 for further information.

vacuum insulating glazing (VIG)
A fabricated assembly of at least two lites of glass,, hermetically sealed at the edges, with a narrow, highly evacuated space which is typically created by spacers (also known as “pillars”).

4 Classification

4.1 Laminated glazings

Glazing assemblies consisting of one or more sheets of glazings and/or plastic glazing material bonded together with one or more organic interlayers. Laminated glazings can include 2-ply laminates, multi-ply laminates, glass-clad materials and glass/plastic laminates. When broken, numerous cracks may appear, but glass fragments tend to adhere to the interlayer(s). For additional information, see ASTM C1172.

4.2 Fully tempered glazings

Glass lites that have been thermally treated in a manufacturing process of uniform heating followed by rapid uniform cooling that produces compressively stressed surface layers in the glass. When broken, the entire lite cracks immediately into very small, granular pieces. Fully tempered glass is also known as toughened glass. For additional information, see ASTM C1048.

4.3 Organic-coated glazings

Glazing assemblies consisting of a lite of glass covered on one or both surfaces with either:

1) an adhesive-applied organic film or sheeting, or
2) an applied organic coating.

When broken, numerous cracks appear, but the glass fragments tend to adhere to the organic coating. Examples of glazings that can be organically coated include wire glass, glass-ceramic, annealed glass, fully tempered glass, chemically toughened glass, heat strengthened glass and mirror glazings.

4.4 Plastic glazings

A single sheet of synthetic plastic material, a combination of two or more such sheets laminated together, or a combination of plastic material and reinforcement material in the form of fibres or flakes. This material contains as an essential ingredient an organic substance of large molecular weight; is solid in its finished state; and, at some stage in its manufacture or in its processing into finished articles, can be shaped by flow.

For additional information, see ASTM C1349 *Standard Specification for Architectural Flat Glass Clad Polycarbonate*.

© CGSB 2026 – All rights reserved

4.5 Mirror glazings

Glazing materials are used architecturally for their reflective qualities. Mirror glazings have a reflective surface and a substrate of glass or plastic. For additional information, see ASTM C1503 *Standard Specification for Silvered Flat Glass Mirror*.

4.6 Vacuum insulating glass

Vacuum insulating glass (VIG) is typically two or more planar glass lites, with each lite of glass separated from the other by a distance typically less than one millimetre. VIG has an array of pillars or spacers to maintain the void between the lites of glass and a hermetic edge seal – typically a glass frit, which joins together and encircles the entire perimeter of the VIG unit. VIG has a hermetically sealable portal or pump-out tube through which atmospheric gas is evacuated. VIGs often contain a getter material which is employed to control residual gas build up.

5 General requirements

5.1 Tests

Tests shall be applied to specimens as shipped by the manufacturer and shall be representative of commercial production, except that any protective masking material shall be removed prior to the test.

5.2 Thickness

The thickness of the specimens to be tested shall be measured and recorded along with the nominal thickness. No manufacturer shall mark or advertise as passing the tests described in this standard, any product of different nominal thickness than that of the specimens passing the tests.

6 Detailed requirements

6.1 Specimen size classification

A description of the required size classifications for impact testing are set forth below.

6.1.1 Unlimited size (U)

864 mm x 1930 mm, ± 3 mm (34 in. x 76 in., ± 1/8 in).

6.1.2 Limited size (L)

Appropriate to manufacturer, largest size commercially produced by the manufacturer less than 864 mm x 1930 mm, ± 3 mm (34 in. x 76 in., ± 1/8 in.). Minimum specimen size: 406 mm x 762 mm, ± 3 mm (16 in. x 30 in., ± 1/8 in.).

Manufacturers submitting specimens in the limited-size classification shall not mark or advertise any product as passing the tests in this standard when either of its dimensions is greater than those of the specimens that passed the tests.

© CGSB 2026 – All rights reserved

6.2 Specimens for impact tests

6.2.1 Safety glazing material

a) Any applications

For impact test (see 10.1) of any safety glazing material, four specimens, each of the thickness and size described in 5.2. and 6.1 respectively, are required. If the test specimens are of an asymmetric material, two shall be impacted from each side.

Note: Testing of alternate shapes and sizes other than those specified in 6.1 does not qualify the product for unlimited use.

b) Indoor applications

For impact test after aging (see 10.4.2) of safety glazing materials used in indoor applications, four specimens, each of the thickness and size described in 5.2 and 6.1 respectively, are required. If the test specimens are of an asymmetric material two shall be impacted from each side.

6.2.2 Mirror glazing with organic adhesive backing material

For mirror glazing using either reinforced or non-reinforced organic adhesive backing material, four specimens each with the backing material applied, of the thickness and size described in 5.2 and 6.1 respectively, are required. The specimens shall be impacted only on the non-reinforced side and with no other material applied.

6.2.3 Bent glass

Bent glass test methods shall be the same as for flat sample testing except as referenced in the text and figures of this standard (see figures 6, 7, 8, 9, 10 and 11). For unlimited size (U) classification of bent glass, 864 mm x 1930 mm ± 3 mm (34 in. x 76 in. ± 1/8 in) specimens with a simple arc-shaped bend of 1016 mm (40 in.) shall be tested. Interpretation of results shall be the same. Secure the glazing at the vertical edges in a manner that does not place additional clamping pressure on the edges.

Note 1: See ASTM C1464 *Standard Specification for Bent Glass* for additional information.

Note 2: Where project-specific requirements or limitations in production exist, other shapes and sizes may be tested.

6.3 Specimens for thermal test

For thermal test (see 10.3), three specimens, each 310 mm x 310 mm (12 in. x 12 in.), representative of commercial production and of identical manufacture and nominal thickness as submitted for impact testing (see 6.2), are required.

6.4 Specimens for weathering tests

For weathering tests (see 10.4), specimens as described in 6.4.1 and 6.4.2 shall be representative of commercial production and shall be of the thinnest construction for which qualification is desired. Specimens constructed of laminated glass, organic-coated glazings or plastics, that have decorative or other functional materials inserted or embedded within the glazing material, shall not need to undergo weathering and subsequent testing if all of the following criteria are met:

a) the interlayer, organic coating or plastic material encapsulates the decorative or otherwise functional material;
b) the interlayer, organic coating or plastic is deemed to comply with 10.4;
c) the thickness of the interlayer, organic coating or plastic on each side of the insert or embedded material is at least the minimum thickness as qualified by testing in 10.4.

The use of an insert or embedded material does not preclude the requirements for impact testing.

© CGSB 2026 – All rights reserved

6.4.1 Plastic glazing material

One unbacked panel, a minimum of 152 mm x 152 mm (6 in. x 6 in.), shall be exposed. One additional unbacked panel, a minimum of 152 mm x 152 mm (6 in. x 6 in.), shall be kept in darkness and used as a control.

A minimum of five specimens, each 12.7 mm x 127 mm (1/2 in. x 5 in.)shall be used for the Charpy Impact Test (ASTM D6110 *Standard Test Method for Determining the Charpy Impact Resistance of Notched Specimens of Plastics*). Alternate panel sizes may be used provided that enough material exists to cut a total of five specimens after exposure. Edges shall be trimmed from exposed panels prior to cutting specimens to minimize edge effects. For materials suspected of being anisotropic, the direction of one axis shall be marked on each panel, and all specimens shall be cut in the same direction.

6.4.2 Laminated glazing and organic coated glazing

Six specimens, each a minimum of 51 mm x 152 mm (2 in. x 6 in.) shall be prepared. Three specimens shall be exposed and three shall be kept in darkness and used as controls. Optical measurements for visible light transmittance, yellowness, haze and colour may be taken on an unexposed sample designated for exposure to serve as the unexposed control values.

6.4.3 Mirror glazing

Mirror glazing shall not be used for exterior glazing without passing all requirements for organic coated glass.

6.5 Specimens for modulus and hardness tests

6.5.1 Specimens for flexural modulus

The specimen dimensions are dependent on the thickness of the material and the span distance capabilities of the testing machine. The dimensions shall meet the requirements specified in ASTM D790 *Standard Test Methods for Flexural Properties of Unreinforced and Reinforced Plastics and Electrical Insulating Materials* for flatwise tests.

6.5.2 Specimens for Rockwell hardness

The specimens shall be at least 25 mm (1 in.) square and at least 6 mm (1/4 in.) thick. Materials less than 6 mm (1/4 in.) thick may be stacked provided that the precautions noted in ASTM D785 *Standard Test Method for Rockwell Hardness of Plastics and Electrical Insulating Materials* are met.

Note: For common plastic glazing thickness and common testing machine capabilities, specimens 12.7 mm (1/2 in.) wide and 127 mm (5 in.) long can meet the requirements. Decreased width and/or increased length may be needed in some cases to meet the span to depth ratio, span to width ratio and span to length requirements of the standard.

7 Packaging, packing, labelling and marking

After having successfully met the requirements of this standard, like products of the same nominal thickness produced in the same manner as the specimens which conform, shall be legibly and permanently marked.

7.1 Marking information

7.1.1 Content of the mark

The mark shall contain the following information:

a) supplier's name, distinctive mark or designation;
b) standard designation: CAN/CGSB-12.1-20XX;
c) classification of test size (L or U) and drop height class (A or B). Plastic glazing does not require drop height;
d) place of fabrication (if fabricator has more than one location fabricating the product).

Note: Additional details and information, such as glass type, thickness and date of manufacture, are permitted.

© CGSB 2026 – All rights reserved

7.1.2 Example of the mark

Individual layout of the mark may vary based on the manufacturer and the product, and are deemed acceptable upon meeting the requirements in 7.1.

Basic	**Basic with some optional information**
Glazing company A	Glazing company B
CAN/CGSB-12.1-2022 LA INT	Laminated (optional)
Plant ID (if more than one location)	CAN/CGSB-12.1-2022 LA INT
	Plant ID (if more than one location)
	YYYYMMDD (Date code optional)

7.2 Application of the mark

The appropriate party using the following guidelines shall apply the permanent mark.

a) Laminated glass stock sheets (i.e., size produced by the manufacturer) shall be marked by the manufacturer of the stock sheet.

b) All glazing products including cut size laminates, fully tempered glass, and organic coated glazing shall be marked by the company producing the finished cut to size glass product.

c) The fabricator or manufacturer shall mark plastic glazing materials.

d) The installer of the safety film shall mark field-applied organic coatings (films).

7.3 Special application marking

Certain types of glazing material shall also be marked with additional information, as appropriate.

7.3.1 Safety glazing materials used in indoor applications only

After having successfully passed the appropriate tests (see 10.4.2), like products and materials produced in the same manner as specimens submitted for testing shall be legibly and permanently marked with the words “Indoor Use Only/Utiliser à l’intérieur seulement”. Interior, if abbreviated, shall be written as “INT”.

7.3.2 Organic coated glass only

Organic coated glazing materials shall be legibly and permanently marked with the words “Glaze This Side In/ Placer cette face vers l’intérieur” to indicate to the installer, inspector, or user which side of the organic coated glass should be exposed to the elements if there is a specific side that should be exposed.

8 Inspection

Upon inspection, products marked in compliance with this standard shall have passed the requirements of section 10.

9 Sampling

Sampling shall be as required by the inspection authority.

© CGSB 2026 – All rights reserved

10 Testing

A summary of tests and glazing material groups is provided in Table 1.

Table 1 — Grouping of tests for different glazing materials

Tests	Glazing materials groups[a]				
	Laminated glazings	Fully tempered glass	Organic coated glazings	Plastic glazing	VIG[b]
Impact (see 10.1)	X	X	X	X	X
Centre punch fragmentation (see 10.2)	—	X[c]	—	—	X[c]
Thermal (see 10.3)	X	—	X[d]	-	X
Weathering[e] (see 10.4)	X	—	X[f]	X	X
Indoor aging (see 10.4.2)	X	—	X	X	X
Hardness (see 6.5.2 and 10.1.4.3)	—	—	—	X[g]	—
Modulus (see 6.5.1 and 10.1.4.3)	—	—	—	X[g]	—

[a] Bent and mirror glazing shall be tested in accordance with requirements of the base-glazing product (see 6.2).

[b] VIG can be made with laminated glazing (with glass) or monolithic tempered glass lites. VIG can meet Type (1) or (4) if laminated and Type (2) or (4) if fully tempered as described in Table 2. The test used must be appropriate to the glazing materials.

[c] Centre punch fragmentation test is used to evaluate the fracture pattern of fully tempered glass specimens that do not break during impact test of 10.1.

[d] Thermal test only applies to organic coated glazings when organic coated glazings are used in the building envelope.

[e] Weathering tests on laminated and organic coated glasses shall be performed on the thinnest construction of all components with clear glass, clear plastics and clear interlayers.

[f] Mirror glazing shall be tested in accordance with 10.4.2

[g] Only required if breakage occurs under impact.

10.1 Impact test

Required specimens shall be tested as submitted. Any protective masking or protective material shall be removed prior to the test. Any applied coating integral to the specimens shall not be removed. The specimens shall be separated to permit free air circulation and shall be conditioned to a uniform test temperature between 18 °C and 29 °C (65 °F and 85 °F) for a minimum of at least 4 h.

10.1.1 Apparatus

The test apparatus shall consist of a test frame and an impactor system. The test frame shall consist of a main frame mounted on two base beams with stiffening members and a sub-frame, in which the specimen is held. The impactor system shall consist of the impactor, traction, release, and suspension devices.

10.1.1.1 Main frame

The main frame shall be constructed to minimize movement, deflection, twisting or racking of its members during testing. For this purpose, the structural framing members shall be steel angles measuring 76 mm x 127 mm x 6 mm (3 in. x 5 in. x 1/4 in.), or other sections and materials of equal or greater rigidity. The main frame shall be welded or securely bolted at the corners and braced as shown in figures 1, 2 and 5.

© CGSB 2026 – All rights reserved

The main frame shall be mounted to a rigid floor and/or wall. Horizontal members made of steel sections shall connect the main frame to a rigid wall. The base beams shall be connected to the main frame by diagonal members of steel sections (see figures 1, 2 and 5). The two base beams of the main frame shall be attached to a concrete base or floor using M16 bolts, or equivalent.

The internal dimensions of the main frame (figure 2) shall have an internal width of 845 mm ± 5 mm (33.25 in. ± 1/5 in.) and an internal height of 1911 mm ± 5 mm (75.25 in. ± 1/5 in.).

The internal dimensions of the main frame shall be 19 mm (3/4 in.) less than the unlimited size [864 mm x 1930 mm ± 3 mm (34 in. x 76 in. ± 1/8 in)] specimen dimensions (Figure 2).

10.1.1.2 Sub-frame (Test specimen mounting frame) (see figures 1 to 4)

The sub-frame for securing the specimens on all four edges shall consist of two parts made from wood or other material. The sub-frame shall be hard enough to withstand the pressure exerted by the clamping forces. Each part shall be provided with a groove or rebate in which a strip of elastomeric rubber shall be laid; the specimen shall only contact the elastomeric rubber strips.

The inner sub-frame (see figures 3 and 4), which shall be in contact with the specimen, is 51 mm x 19 mm (2 in. x 3/4 in.) minimum. The outer part of the sub-frame hold the specimen and shall measure 50 mm x 38 mm (2 in. x 1.5 in.) minimum.

The sub-frame shall be fixed to the main frame by at least twelve bolts (M10 bolts, scissors clamps or equivalent). These shall be fixed at the points marked on figure 1 and figure 2, with no fewer than two on any edge and spaced no more than 450 mm (18 in.) apart.

To provide and limit elastomeric rubber compression and avoid sub-frame distortion, non-compressible shims appropriate to glazing thickness shall be used to separate the inner and outer parts of the sub-frame (see figure 3).

The elastomeric rubber strip, the only element of the sub-frame that the test specimen shall come into contact with, shall be 19 mm (3/4 in.) wide by 10 mm (3/8 in.) thick and have a Shore-A hardness of 40 ± 10 (see ASTM D2240 *Standard Test Method for Rubber Property − Durometer Hardness*).

Note: Modifications that clearly do not alter the function or performance of the mainframe or sub-frame are acceptable. Any reasonable means may be used to secure the sub-frame to the main frame provided the mounting is secure and the pressure on the glazing specimen in the sub-frame is controlled.

10.1.1.3 Impactor

The impactor shall consist of the leather bag[2] described in figure12, a commercial punching bag with its bladder left in place, or any other leather bag of nominally identical shape and size. The bag shall be filled with lead shot of 2.4 mm ± 0.1 mm (0.1 in.) diameter (nominal USA No. 7 1/2 or European No. 7 lead shot) and taped. After filling with lead shot, the top shall be either pulled over the metal sleeve and tied with a cord; or the top shall be twisted around the threaded eyebolt shaft and tied below the metal sleeve, or both. To reduce bag damage during testing, the exterior of the leather bag surface shall be completely covered with glass filament reinforced pressure sensitive polyester adhesive tape[3], 12 mm to 15 mm (1/2 in. to 3/5 in.) in width and 0.15 mm (0.006 in.) thick. The entire bag shall be taped, using three rolls or 165 m (180 yd.) total length, and shall be taped in a diagonal-overlapping manner. The neck of the bag shall be taped separately, with additional glass filament reinforced tape of the same

[2]A leather bag similar to the ones found at the Safety Glazing Certification Council (SGCC), or equivalent, meeting the requirements should be used. The leather bag can be found at www.sgcc.org.

[3]Adhesive tape similar to 3M No. 898, or equivalent, meeting the requirements should be used. The 3M tape, which is a trade name, can be found in various locations, including their website at 3M Science. Applied to Life. | 3M Canada.

© CGSB 2026 – All rights reserved

kind. The total mass of the impactor assembly shall be 45.4 kg ± 0.2 kg (100 lb. ± 4 oz.) as described in figure 12, excluding traction system attachments.

To reduce bag deformation during testing, the bag shall be rotated about the axis of its suspension device before each specimen or sample set, by no less than 30 degrees and by no more than 90 degrees. See Figure 12.

Note: To reduce bag damage during testing, a thin homogeneous or nonwoven plastic film no more than 0.13 mm (0.005 in.) thick or a loosely draped woven cloth towel weighing no more than 0.05 g/cm^2 (0.0113 oz./in^2) may be suspended vertically in front of the surface of the specimen at a distance no more than 10 mm (2/5 in.).

The impactor shape shall be maintained constant during testing. To reduce visible deformation of the impactor, it shall be removed from the suspension device and pummelled with a rubber mallet into its approximate original shape.

10.1.1.4 Suspension device

The impactor shall be suspended by means of a single, stranded-steel cable, approximately 3 mm (1/8 in.) diameter, from an upper swivel fixture above the head of the main frame at an elevation of which the minimum distance between the swivel-fixture and impactor centre line is 1524 mm (60 in.).The upper swivel fixture shall be rigid to ensure the point of suspension remains stationary. The lower swivel(s) or equivalent shall be provided on the bag for rotation of the impactor about its suspension device axes between impact events.

When at rest, the surface of the impactor, at its maximum diameter, shall be located no more than 51 mm (2 in.) from the surface of the specimen and no more than 51 mm (2 in.) from the centre of the specimen.

10.1.1.5 Traction and release system

A traction system shall be used which enables the impactor to be brought into its launch position. The launch position will depend on the drop height selected. The traction cable shall be connected to the impactor traction system by a release mechanism, with provisions for rotating the impactor.

To position the impactor at the selected drop height, a traction force shall be applied to raise the impactor such that the axis of the impactor is aligned with the suspension cable, with the cable remaining taut. To ensure this, the top and bottom ends of the impactor shall be connected to the release device by a suitable link.

10.1.2 Impact classification

Glazing materials shall be submitted for impact testing to a selected drop height class.

10.1.2.1 Drop height class

Glazing materials conforming to this standard are classified by their performance under the impact test at the selected drop height.

a) Class A — glazing material that complies with the requirements of 10.1.4 when tested in accordance with the procedure in 10.1.3 at a drop height between 1219 mm and 1232 mm (48 in. and 48 ½ in.) using an impact specimen appropriate to the size classification.

b) Class B — glazing material that complies with the requirements of 10.1.4 when tested in accordance with the procedure in 10.1.3 at a drop height of between 457 mm and 470 mm (18 in. and 18 ½ in.) using an impact specimen appropriate to the size classification.

10.1.2.2 Drop height qualification

Glazing material qualified for classification at the higher impact drop height level Class A, shall be deemed to comply with the lower-impact drop height level Class B.

© CGSB 2026 – All rights reserved

10.1.3 Impact procedure

a) Each specimen shall be placed and centered in the sub-frame such that each edge is encased in the elastomeric rubber strip to a depth of at least 10 mm (2/5 in.). With the specimen mounted, the elastomeric rubber strip shall not be compressed by more than 15% of its thickness. For bolts, torque shall be 20 Nm + 5 Nm (15 ft-lb + 4 ft-lb).

Note: For vacuum insulating glass (VIG), a border of 25 mm (1 inch) shall be marked around the entire perimeter of the test specimen. This identifies the pre-marked exclusion area (see section 10.2) and will aid in identifying the composite perimeter fragments. Marking this area with a dark marker is suggested.

b) A drop height classification from 10.1.2.1 shall be selected. The impactor shall be rotated as required in 10.1.1.3, then raised to the selected drop height intended for the classification and stabilized. At the selected drop height, the suspension device shall be taut and the axes of the impactor and cable shall be in line.

c) The impactor, stabilized in the launch position in a vertical plane normal to the test specimen, shall be released and fall without initial velocity or axial rotation. At least one impact shall occur on each test specimen. Unbroken specimens may be reused for higher classification impact testing.

d) The test specimen shall be classified in accordance with the glazing in Table 2. Each test specimen shall be inspected after impact and it shall be recorded and reported whether it complied or did not comply with the applicable interpretation of results contained in Table 2. If classified as fully tempered glass, the sub-frame shall be opened to allow any particles to be released and fall free.

e) When testing VIG and composite perimeter fragments are observed, an effort shall first be made to separate any crack-free particles suspected of being in the 10 largest search. If any of the 10 largest fragments occur in the 25 mm (1 in.) perimeter, but is unable to be broken free from the hermetic edge seal, the particle may be measured and the weight calculated for addition to the total weight to determine if the test specimen complies. As an alternate to physical area measurement, digital photography and/or a calculation method may be used.

f) If any of the required specimens fail to comply with the requirements of 10.1.4, the material shall not be classified for impact.

g) For asymmetric materials, the test shall be carried out on both sides using equal numbers of separate specimens.

h) Once the required number of specimens is impacted and inspected, the impact classification as described in 10.1.2 shall be reported. If all specimens tested by impact either do not break, or break according to the requirements of 10.1.4, the glazing material shall be classified as described in 10.1.2, at the impact level tested. Classification shall comprise the word “Class”, followed by a letter designation (A or B) for drop height class (see 10.1.2.1).

i) If it is required to test the material to a higher impact classification level, the test shall be repeated on the required number of undamaged specimens of the same material at the higher impact level. At the fabricator’s discretion, previously tested specimens that were not broken may be used for higher impact classification testing.

j) Each specimen of bent glass shall be impacted on the convex surface at the centre of the specimen perpendicular to the frame from the selected drop height (see figures 6 and 8).

Note : The convex surface is tested due to the realistic constraints of the test set up in impacting the concave surface. Additionally, as of the date of publication, no data was available that showed one surface is more or less likely to break during impact.

© CGSB 2026 – All rights reserved

Table 2 – Applicable interpretation of results for shot bag impact

Interpretation of results	Laminated glazing	Fully tempered glass	Organic coated glazings	Plastic glazing	VIG[a]
Type (1)	X	–	X	–	X
Type (2)	–	X	–	–	X
Type (3)	–	–	–	X	–
Type (4)	X	X	X	X	X
[a] VIG can meet Type (1) or (4) if laminated and Type (2) or (4) if fully tempered.					

10.1.4 Acceptance criteria

Evaluation after impact shall occur whether the specimen remains fully engaged in the frame or partially engaged in the frame, or is entirely disengaged from the frame. A glazing material shall be considered to pass the impact test if any one of the applicable four types of acceptance criteria listed below is met by each of the required number of impact specimens that are tested.

10.1.4.1 Type (1)

Upon impact, one or more cracks may appear. Fragments tend to be contained by the interlayer or adhesive-like laminated or organic-coated glazing.

Specimen acceptance criteria: : No tear or shear or opening shall develop within the vertical specimen through which a 76 mm (3.0 in.) diameter sphere can pass using a horizontally applied force of 18 N (4.0 lb.) or less. Additionally, if particles are detached from the test specimen (including particles that might be retained in the frame under the stops), within 3 minutes after impact, their total weight shall not exceed the mass equivalent to 10 000 mm^2 (15.5 $in.^2$) of the original test piece. The largest single particle shall weigh less than a mass equivalent to 4400 mm^2 (6.82 $in.^2$) of the original test piece. Detached individual particles less than the mass equivalent of 650 mm^2 (1 $in.^2$) shall be excluded from the fragment analysis..

10.1.4.2 Type (2)

Upon impact, the specimen shatters like fully tempered glass.

Specimen acceptance criteria: The ten largest crack-free particles shall be selected within 5 minutes subsequent to the impact and shall not exceed the mass equivalent weight of 6452 mm^2 (10 $in.^2$) of the original specimen. For purposes of impact test acceptance when breakage occurs, the average thickness of a fully tempered glass specimen containing grooves, bevels, or other thickness altering fabrication shall be considered the average of the thinnest measurement of each of the ten geometrically largest crack-free particles. This average thickness shall then be used to determine the maximum allowable weight of the ten largest crack-free particles.

Note: For soda lime glass, the weight in ounces of 6452 mm^2 (10 $in.^2$) of glass is equal to 14.5 times the glass thickness in inches. The weight in grams of 6452 mm^2 (10 $in.^2$) of glass is equal to 412 times the glass thickness in inches (16.18 g/mm).

10.1.4.3 Type (3)

Upon impact, the specimen breaks like plastic glazing.

Specimen acceptance criteria: The stiffness and hardness of the specimen shall be determined. A modulus of elasticity (see ASTM D790) less than 3.9 GPa (550 000 psi) and a Rockwell hardness (see ASTM D785) less than M or R 140 shall indicate satisfactory compliance.

10.1.4.4 Type (4)

Upon impact, the specimen does not break.

© CGSB 2026 – All rights reserved

Specimen acceptance criteria: No breakage occurs. For fully tempered glass, the specimen shall meet the requirements specified in 10.2.

10.2 Centre punch fragmentation test

The centre punch fragmentation test shall only be used to evaluate fully tempered glass specimens that did not break during the impact test as described in 10.1 and shall be performed in addition to that test. Specimens for testing shall have been previously tested per 10.1, and their temperature shall be between 18.3 °C and 29.4 °C (65 °F and 85 °F) prior to testing.

10.2.1 Equipment

The following equipment shall be required:

a) a **sharp impactor** such as a pointed hammer of about 75 g (2.65 oz.) mass, or a spring-loaded centre punch, or a similar appliance can be used;

b) a **means of specimen support** consisting of a flat base with adjustable horizontal curbs to prevent scattering of fragments;

c) a **calibrated scale** suitable for accurately weighing selected particles to the nearest 0.1 g (0.004 oz.);

d) a **calibrated micrometre** capable of measuring the thickness of the selected specimen/particle.

10.2.2 Procedure

a) Flat glass: The specimen shall be placed on the flat base and the curb shall be placed lightly along the specimen edges so the sample can elongate slightly yet the fragments remain interlocked.

b) Bent glass: The specimen shall be placed on the bent glass impactor frame on a flat base with the convex side facing up. The specimen shall have edges continuously supported.

c) The test specimen shall be struck 25 mm (1 in.) inboard of the longest edge at its midpoint until fracture occurs.

10.2.3 Weight determination

Within 5 minutes after fracture, the ten largest crack-free pieces shall be collected and weighed. In the event any of the ten largest pieces crack after original selection, all pieces shall be weighed.

For transparent flat glass, the thickness of the largest piece shall be measured. For patterned glass thickness measurement, see ASTM C1036 *Standard Specification for Flat Glass* for the appropriate thickness measurement technique. The thickness shall be recorded.

When testing VIG and composite perimeter fragments are observed, first an effort shall be made to separate any crack-free particles suspected of being in the 10 largest search. If any of the 10 largest fragments occur in the 25 mm (1 in.) perimeter but is unable to be broken free from the hermetic edge seal, the particle may be measured and weight calculated for addition to the total weight to determine if the test specimen complied or did not comply. As an alternate to physical area measurement, some form of digital photography and/or calculation method is acceptable.

Note: Some applications may require a particle count in accordance with BS EN 12150. For VIG, if any of the 10 largest fragments occur in the 25 mm (1 in) perimeter but is unable to be broken free from the hermetic edge seal, the particle may be measured and weight calculated for addition to the total weight.

© CGSB 2026 – All rights reserved

10.2.4 Centre punch fragmentation interpretation of results

The total weight of the ten largest crack-free pieces shall weigh no more than the equivalent weight of 6452 mm^2 (10 $in.^2$) of the original test sample.

Note: For soda lime glass, the weight in ounces of 6452 mm^2 (10 $in.^2$) of glass is equal to 14.5 times the glass thickness in inches. The weight in grams of 6452 mm^2 (10 $in.^2$) of glass is equal to 412 times the glass thickness in inches (16.18 g/mm).

No single particle shall exceed 102 mm (4 in.) in length excluding the area within 102 mm (4 in) radius centred on the impact point and the 25 mm (1 in.) border around the entire perimeter of the test specimen (see Figure 13).

If any of the required specimens fail to comply with the requirements of 10.2.4, the material shall not be classified for impact.

10.3 Thermal test for laminated and organic coated glazings

This test shall be made to determine the probable effects of prolonged exposure to high temperature and high humidity conditions.

10.3.1 Procedure

Three 305 mm x 305 mm (12 in. x 12 in.) flat specimens, as submitted, shall be subjected to an extended heat history through bake testing in an oven or boil testing in accordance with ASTM C1914 *Standard Test Method for Bake and Boil Testing of Laminated Glass*. The thermal test may be conducted either in a heating chamber, boiling water or both. Thermal test shall only apply to organic coated glazings that are used for exterior glazing.

10.3.2 Acceptance criteria

The specimen shall be evaluated in accordance with ASTM C1914.

10.4 Weathering tests for laminated, organic coated and plastic glazings

The purpose of these tests is to determine whether these safety-glazing materials will successfully retain their safety characteristics after exposure to weathering conditions for an extended period of time. This shall be determined through the measurement of laminated properties known to indicate stability of commonly used polymers in safety glazing. The weathering methods described in ASTM C1900 *Standard Practice for Weathering and Evaluation of Laminated Glass* shall be used for all materials subjected to exterior or interior exposure. After weathering, organic-coated glass shall be tested as described in 10.4.1.1 and 10.4.1.2; laminates shall be tested as described in 10.4.1.1 and 10.4.1.3, and plastics shall be tested as described in 10.4.1.4. Plastic, organic coated or laminated materials intended for interior use only shall be subjected only to the aging requirements specified in 10.4.2 (for further guidance refer to Annex B)..

10.4.1 Tests after weathering

Specimens exposed in accordance with 10.4 shall be tested after weathering according to the procedures outlined in 10.4.1.1 to 10.4.1.4, for organic coated glass, see 10.4.1.1 and 10.4.1.2; for laminates, see 10.4.1.1 and 10.4.1.3; and for plastics, see 10.4.1.4.

10.4.1.1 Laminated and organic coated materials

Assessment of optical changes after weathering shall be included for laminated and organic coated materials as significant changes can be indicative of product degradation which may have an effect on impact and safety performance. Changes in the blank glazing (see 10.4.1.3), based on the comparison of non-weathered retain data shall be deducted from the weathered laminated or organic coated specimens for evaluation of the properties listed in 10.4.1.2.

© CGSB 2026 – All rights reserved

Acceptance criteria: When compared to the control (unexposed) specimens, no weathered specimen shall exhibit more than the allowable change, as specified, for the following properties:

1) visible light transmittance change shall not be greater than 5 percentage units (e.g., 91% control ± 5% = 96% or 86%) as measured in accordance with ASTM D1003 *Standard Test Method for Haze and Luminous Transmittance of Transparent Plastics* or ASTM E903 *Standard Test Method for Solar Absorptance, Reflectance, and Transmittance of Materials Using Integrating Spheres*;

2) yellowness index (YI), for clear products only, shall not increase greater than 0.5 YI units (e.g., 0.70 YI control + 0.5 = 1.20) as measured in accordance with ASTM E313 *Standard Practice for Calculating Yellowness and Whiteness Indices from Instrumentally Measured Color Coordinates*;

3) haze increase shall not be greater than 0.5 percentage units (e.g., 0.70 control ± 1.20) as measured in accordance with ASTM D1003;

4) delta E shall not be less than or equal to 5 units as measured in accordance with ASTM E308 *Standard Practice for Computing the Colors of Objects by Using the CIE System*, and calculated in accordance with ASTM D2244 *Standard Practice for Calculation of Color Tolerances and Color Differences from instrumentally Measured Color Coordinates* and section 6.2.1.

10.4.1.2 Organic coated glazing only

Organic coated glazing specimens shall be judged satisfactory if they pass the requirements specified in 10.4.1.1, the adhesion test in 10.4.1.2.1 and the tensile strength test in 10.4.1.2.2.

10.4.1.2.1 Adhesion test

a) Specimens: Six specimens, [nominally 51 mm x 152 mm (2 in. x 6 in.)] shall be prepared as described in 6.4.2 and shall be tested. The specimens shall be conditioned just prior to the performance of the adhesion test at 23 ºC ± 2 ºC (73.5 ºF ± 3.5 ºF) and 50% ± 2% relative humidity for 24 h.

b) Apparatus: The test apparatus shall be 1) a tensile tester of the constant-rate-of-extension (CRE) type with the moving crosshead set to move at 305 mm (12 in.) per minute and the load range set so that the average peel force will fall at 30%-50% of full scale, and 2) a cutting device containing new razor blades for cutting 25 mm (1 in.) wide specimens. Each razor blade shall be used only once.

c) Procedure: Using the 25 mm (1 in.) razor cutting device, a straight strip of the organic coating shall be cut in the lengthwise direction of the specimen. Approximately 51 mm (2 in.) of one end of the 25 mm (1 in.) wide organic strip shall be peeled back. A strip of pressure-sensitive tape shall be attached to the side of the organic strip opposite the adhesive to extend this free end to about 203 mm (8 in.) in length. The end of the glass panel from which the organic strip was removed shall be placed in the lower clamp of the tensile tester and the free end of the tape shall be placed in the upper clamp. The remainder of the organic strip shall be mechanically peeled from the glazing, and the peel value shall be recorded. The average pull for each specimen shall be determined from the chart record.

d) Acceptance criteria: The organic coated glass adhesions shall be judged satisfactory if the average adhesion value of the three exposed specimens is no less than 75% of the average adhesion value of the three control (unexposed) specimens.

10.4.1.2.2 Tensile strength test

a) Specimens: The samples for this test shall be the same specimens used in the adhesion test described in 10.4.1.2.1 and shall be conditioned as described in 10.4.1.2.1 a).

© CGSB 2026 – All rights reserved

b) Apparatus: The test apparatus shall be:

1) a CRE tensile tester set as follows:

- gage length – 51 mm (2 in.);
- crosshead speed – 51 mm (2 in.) per minute;
- load range – set full-scale load so that specimens will break at 30%-60% of full scale, and

2) a cutter containing new razor blades for cutting 12 mm (1/2 in.) wide specimens. Each razor blade shall be used only once.

c) Procedure: Using the 12 mm (0.5 in.) razor cutting device, a straight strip of the organic coating shall be cut in the lengthwise direction of the glass sample for the full 152 mm (6 in.) length. This strip shall be carefully peeled from the glass panel and shall be tested for breaking strength in the tensile strength tester.

d) Acceptance criteria: The organic-coating tensile shall be judged satisfactory if the average tensile value of the three exposed specimens is no less than 75% of the average tensile value of the three control (unexposed) specimens.

10.4.1.3 Laminated and organic glazing only

a) Specimens: After exposure, the test specimens may be cleaned, if necessary, using a procedure recommended by their manufacturer to remove any residues present.

b) Conditioning: Both the unexposed and exposed specimens shall be conditioned prior to examination or further testing for a minimum of 48 h at 22 °C to 24 °C (71 °F to 75 °F) and 50% ± 2% relative humidity.

c) Viewing: When irradiated and conditioned, the exposed specimens shall be examined and compared visually with the control (unexposed) specimens. Specimens shall be placed in a vertical position. The viewer shall look through the specimen using daylight without direct sunlight, or using a background light suitable for observing blemishes. View at 910 mm (36 in.).

d) Acceptance criteria: Any improvement in clarity or discolouration is acceptable. When examined after ultraviolet exposure, each exposed test specimen shall meet the requirements specified in 10.4.2.1 and shall be free from noticeable decomposition, as indicated by the absence of the following specific defects or blemishes in comparison to the unexposed control (unexposed) specimens.

1) no bubbles or delamination shall be visible more than 10 mm (0.4 in.) from any outer edge of the specimen; and

2) no crazing or cracking shall be visible;

3) if no noticeable decomposition and no other defects develop upon exposure, the glazing material shall be reported as visually acceptable. Otherwise, unacceptable glazing material shall be reported as visually blemished.

Note: Testing procedure may cause bubbles or delamination as a result of the testing apparatus and do not necessarily indicate performance and in-service use.

e) Interpretation of weathering results: When the thinnest construction of all components of laminated and organic coated glazings have passed the applicable weathering requirements and subsequent evaluation as stated in 10.4, thicker components and coloured components of the same material shall be deemed as qualified for weathering compliance. There should not be allowable limitations for delamination. Once it is generated, it will increase further throughout its life.

© CGSB 2026 – All rights reserved

10.4.1.4 Plastics only

a) Specimens: The specimens shall be evaluated before and after exposure in accordance with ASTM D6110, Charpy Impact Test, Method B, with the following exceptions:

1) the specimens shall not be notched;

2) the specimens shall be tested with the exposed surface in tension;

3) the specimens shall be exposed and tested flatwise;

4) the span shall be reduced to 51 mm (2 in.) for thin material that may slip through the supports without breaking;

5) the average of four samples taken from the weathered specimens shall be reported. A fifth sample shall be retained as the control (unexposed) specimen.

b) Acceptance criteria: Plastic materials shall be acceptable for use as safety glazing if the impact strength as measured by the Charpy Impact Test, is not reduced by more than 25% as a result of the natural or accelerated exposure. No bubbles or other physical degradation shall develop in the exposed portion.

10.4.2 Indoor applications only — Aging tests for laminates, plastics and organic coated glazing, and mirror glazing

The purpose of these tests shall be to determine whether laminates, plastic, organic coated glazing and mirror glazing for indoor use only will successfully retain their safety characteristics after exposure to simulated aging conditions for an extended period of time. The specimens described in 6.2 for impact test after aging shall be used. The specimen size shall be in accordance with 6.1. Specimens passing the requirements of natural or accelerated exposure as described in 10.4 and the requirements of subsequent testing as described in 10.4.1 shall be deemed qualified for indoor applications without further evaluation. Weathering tests shall be conducted in accordance with the indoor application requirements of ASTM C1900.

Acceptance criteria:

1) Aging tests for plastics used in indoor applications only

After exposure in accordance with ASTM C1900, specimens passing the requirements specified in 10.4.1 shall be qualified for indoor applications.

2) Aging tests for laminates and organic coated glazing used in interior applications only

After exposure in accordance with ASTM C1900, specimens passing the requirements specified in 10.4.1.2 shall be qualified for indoor applications.

3) Aging tests for mirror glazing used in interior applications only

i) Apparatus: a conditioning chamber shall be of sufficient size to hold up to 864 mm x 1930 mm ± 3 mm (34 in. x 76 in. ± 1/8 in) panels vertically and be capable of maintaining conditions of 60 ºC ± 3 ºC (140 ºF ± 5 ºF) for the first portion of the procedure, 38 ºC ± 3 ºC (100 ºF ± 5 ºF) and 95% ± 5% relative humidity for the second portion of the procedure, and 18 ºC ± 3 ºC (0 ºF ± 5 ºF) for the last portion of the procedure.

ii) Procedure: Four of the organic coated glazing specimens shall be positioned vertically and shall be spaced at least 25 mm (1 in.) apart in the chamber. The temperature shall be raised to 60 °C ± 5 °C (140 °F ± 5 °F) within 3 h and shall be maintained for 21 h. The chamber conditions shall be reduced to 38 ºC ± 3 ºC (100 °F ± 5 °F) and 95% ± 5% relative humidity within 3 h and shall be maintained for 21 h. This represents one complete

© CGSB 2026 – All rights reserved

cycle. The specimens shall be exposed to ten complete cycles. At the completion of the tenth cycle, the chamber conditions shall be changed to 18 ºC ± 3 ºC (0 °F ± 5 °F) within 3 h and shall be maintained for 21 h. The fifth specimen shall be retained unexposed as a control specimen for the effects of the exposure cycling. Upon completion of the required number of exposure cycles, all specimens shall be tested as described in 10.1.

4) Impact test after aging for mirror glazing

i) Apparatus: The apparatus described in 10.1.1 shall be used.

ii) Procedure: All the specimens exposed as described in 10.4.2 shall be conditioned as per 10.1 and shall be evaluated by the procedure described in 10.1.2.

iii) Acceptance criteria: The exposed specimens shall again satisfactorily complete the impact test in accordance with 10.1.3. Milkiness may develop but defects other than these shall be cause for rejection.

© CGSB 2026 – All rights reserved

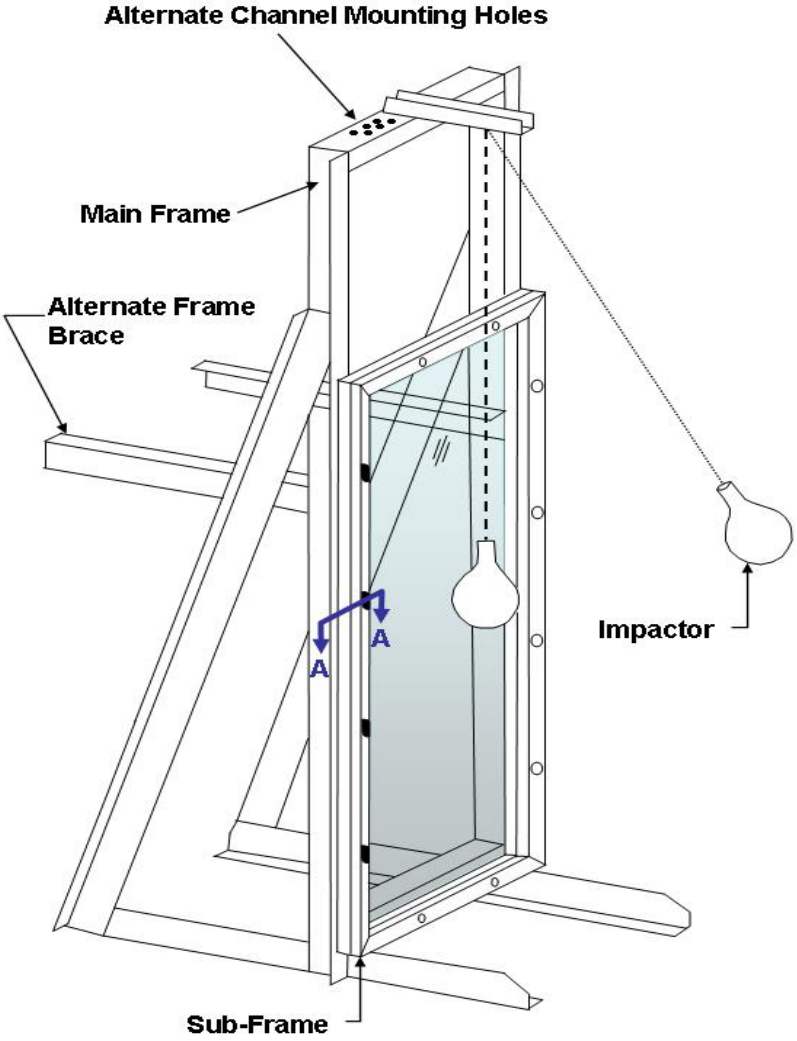

Figure 1 – Impact test structure

© CGSB 2026 – All rights reserved

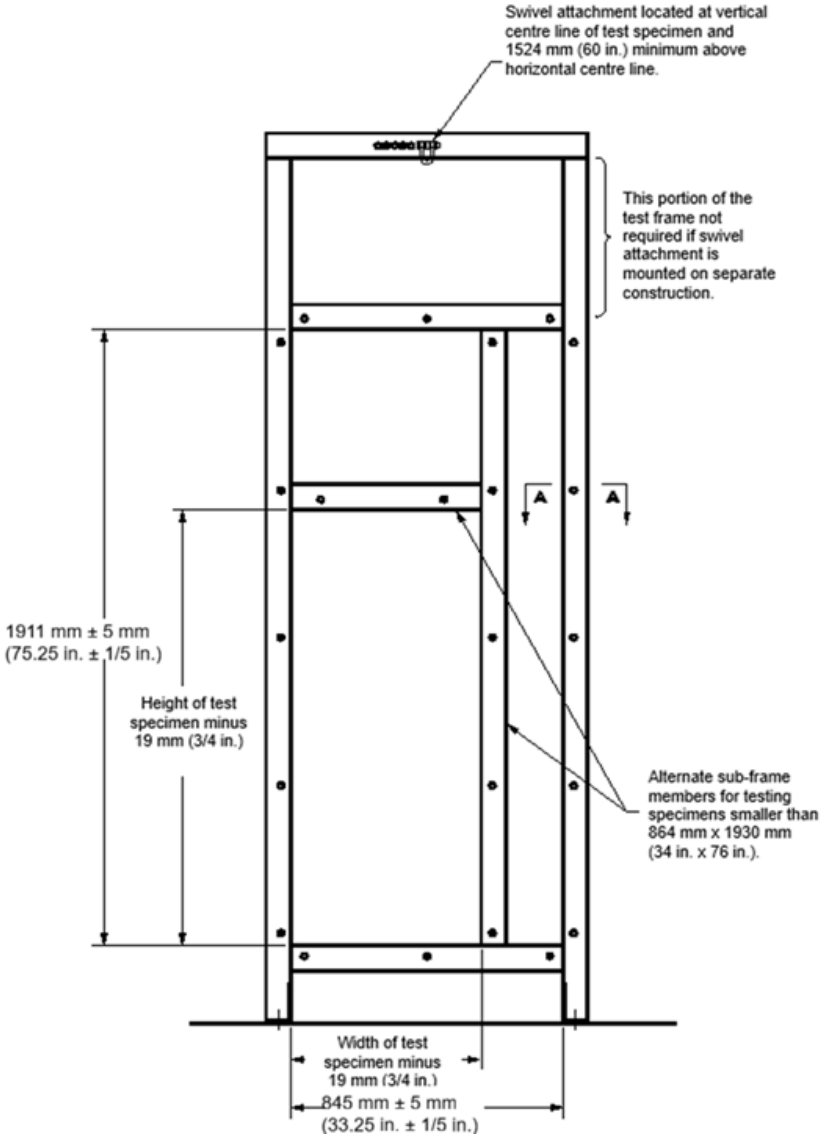

Figure 2 – Impact test frame – Front view

© CGSB 2026 – All rights reserved

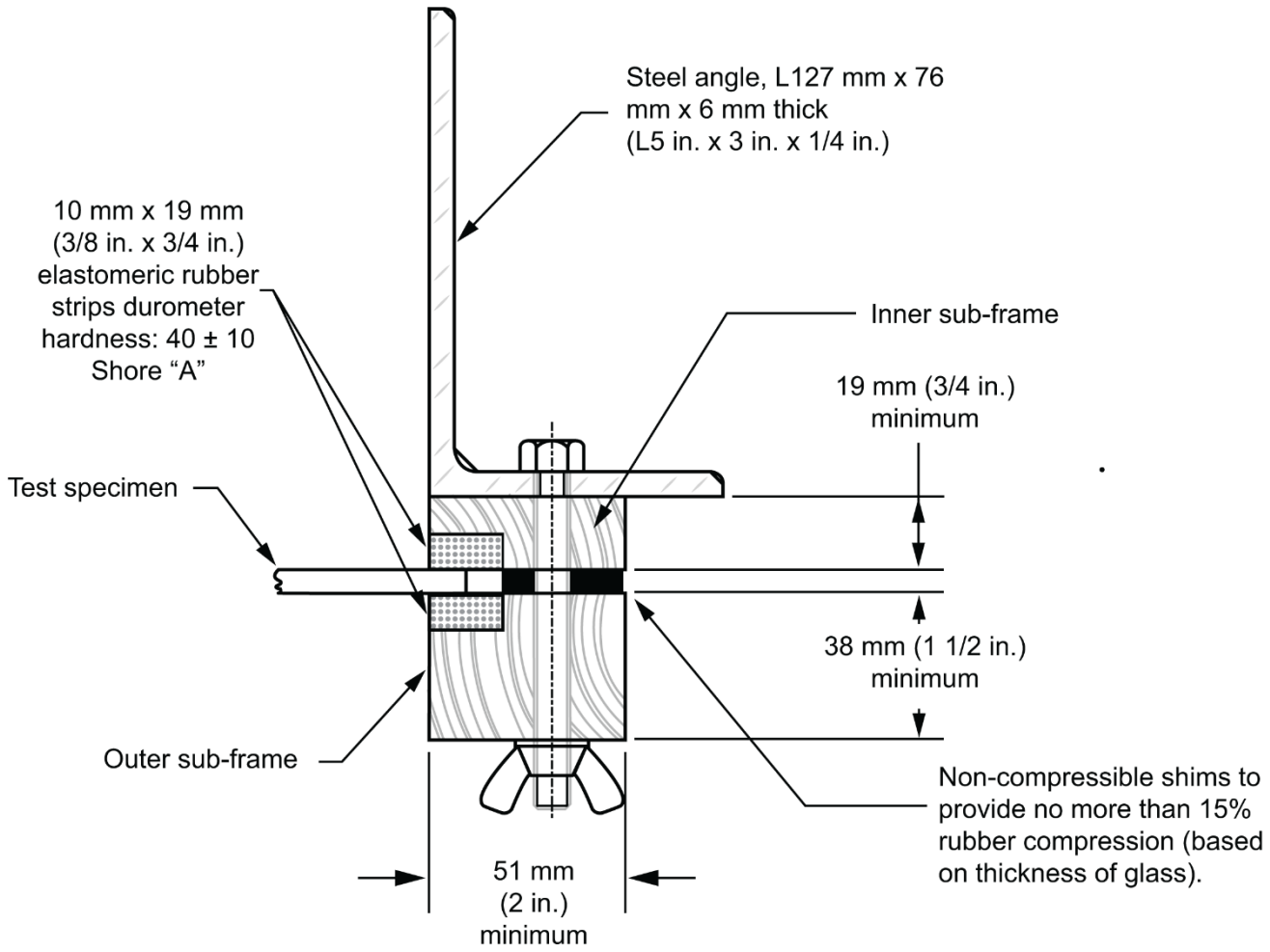

Figure 3 ─ Detail of section A-A properly clamped test specimen [> 3 mm (1/8 in.)]

© CGSB 2026 – All rights reserved

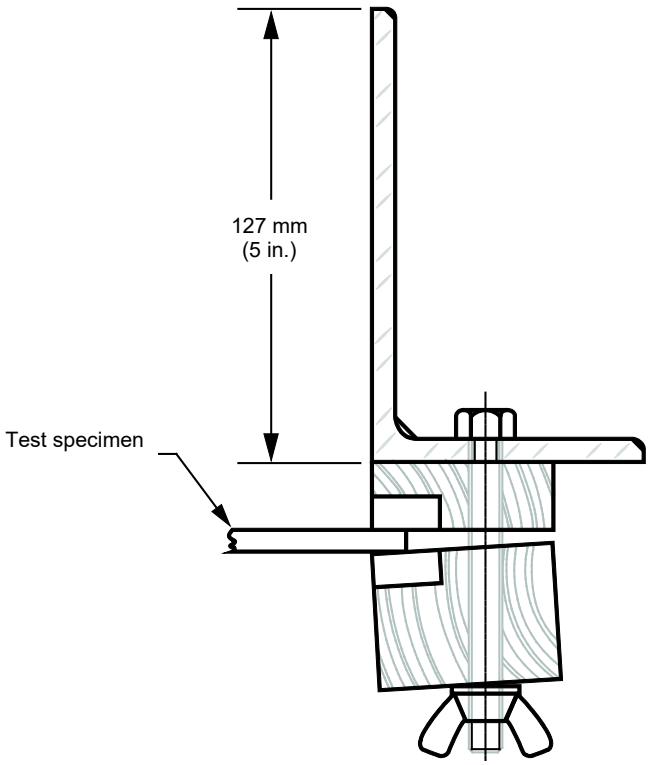

Figure 4 – Detail of section A-A improperly clamped test specimen [>3 mm (1/8 in.)]

© CGSB 2026 – All rights reserved

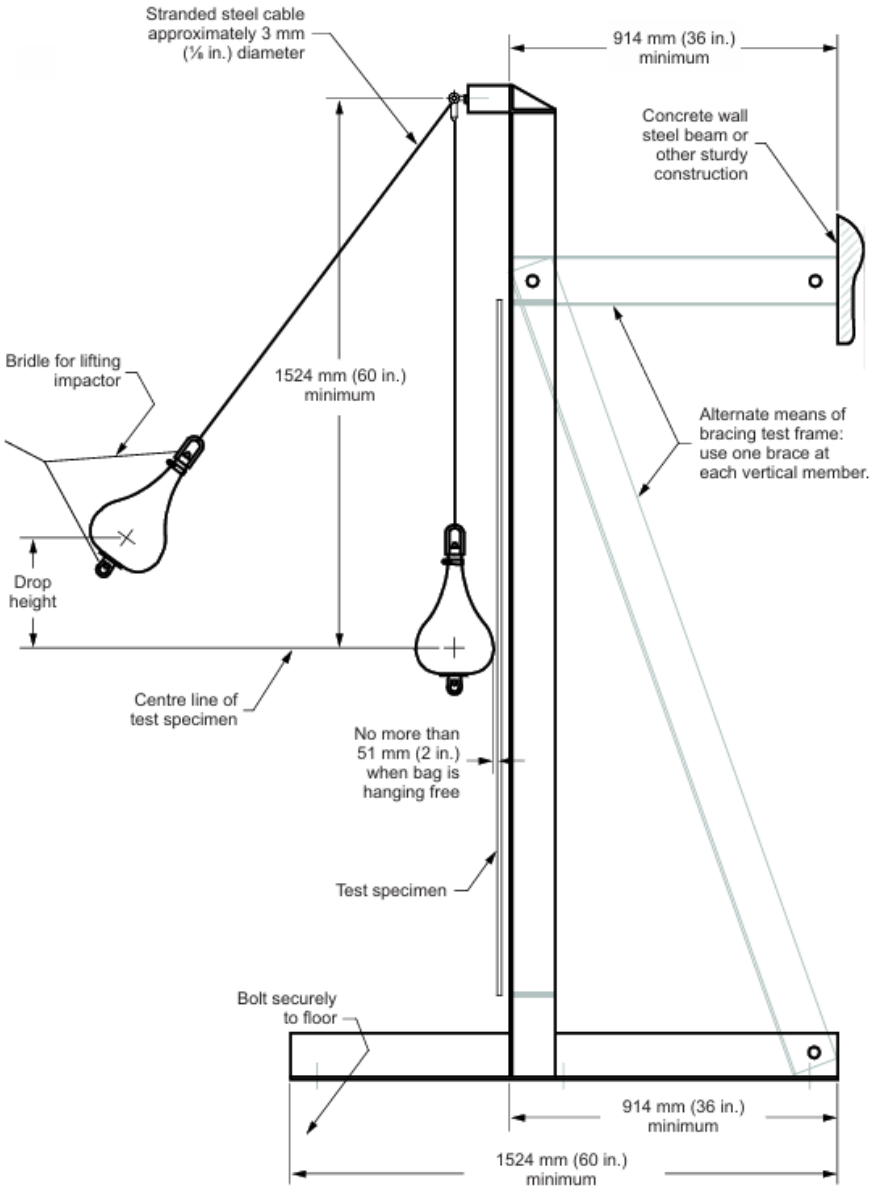

Figure 5 – Impact test frame – Side view

© CGSB 2026 – All rights reserved

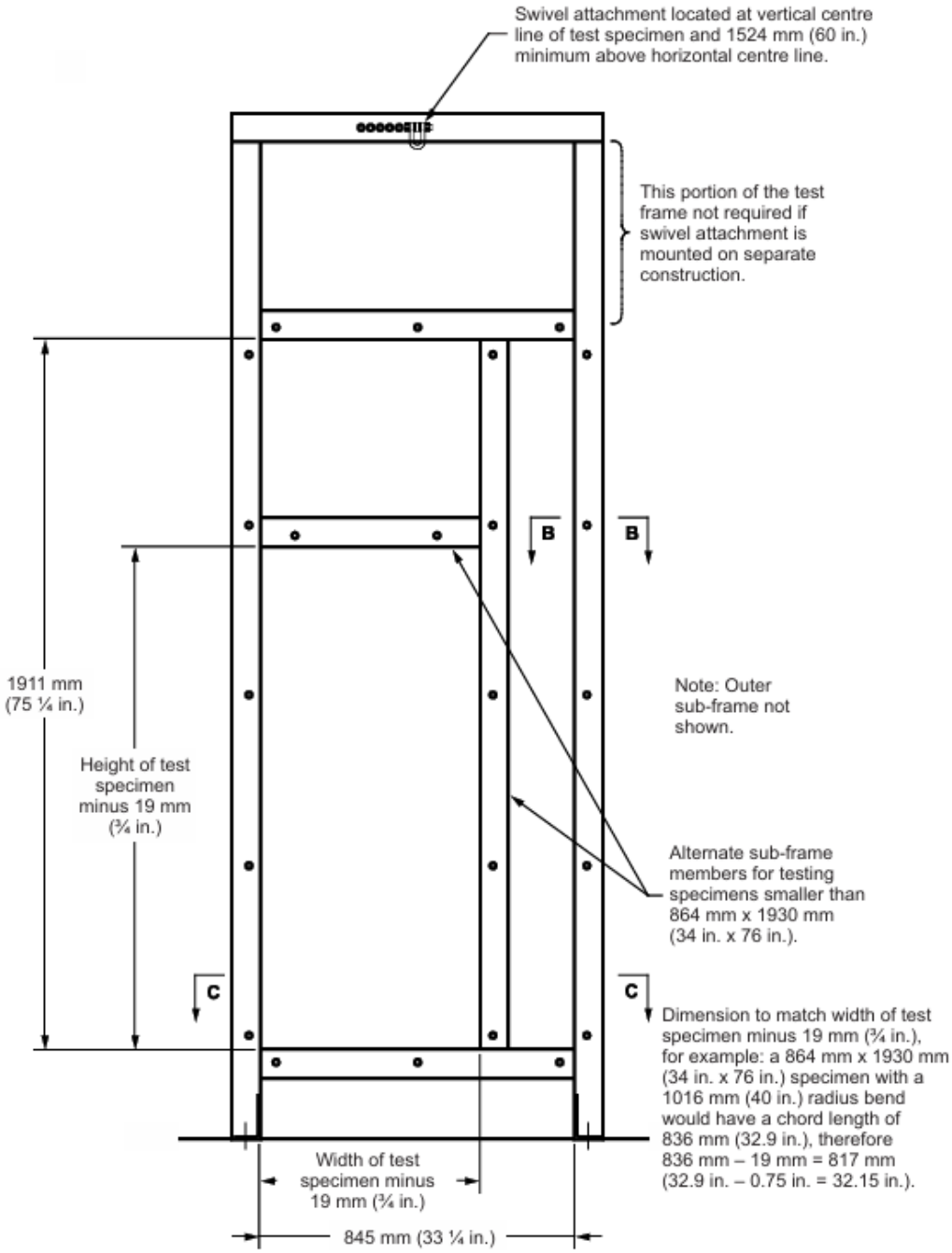

Figure 6 ─ Impact test frame – Bent glazing – Front view

© CGSB 2026 – All rights reserved

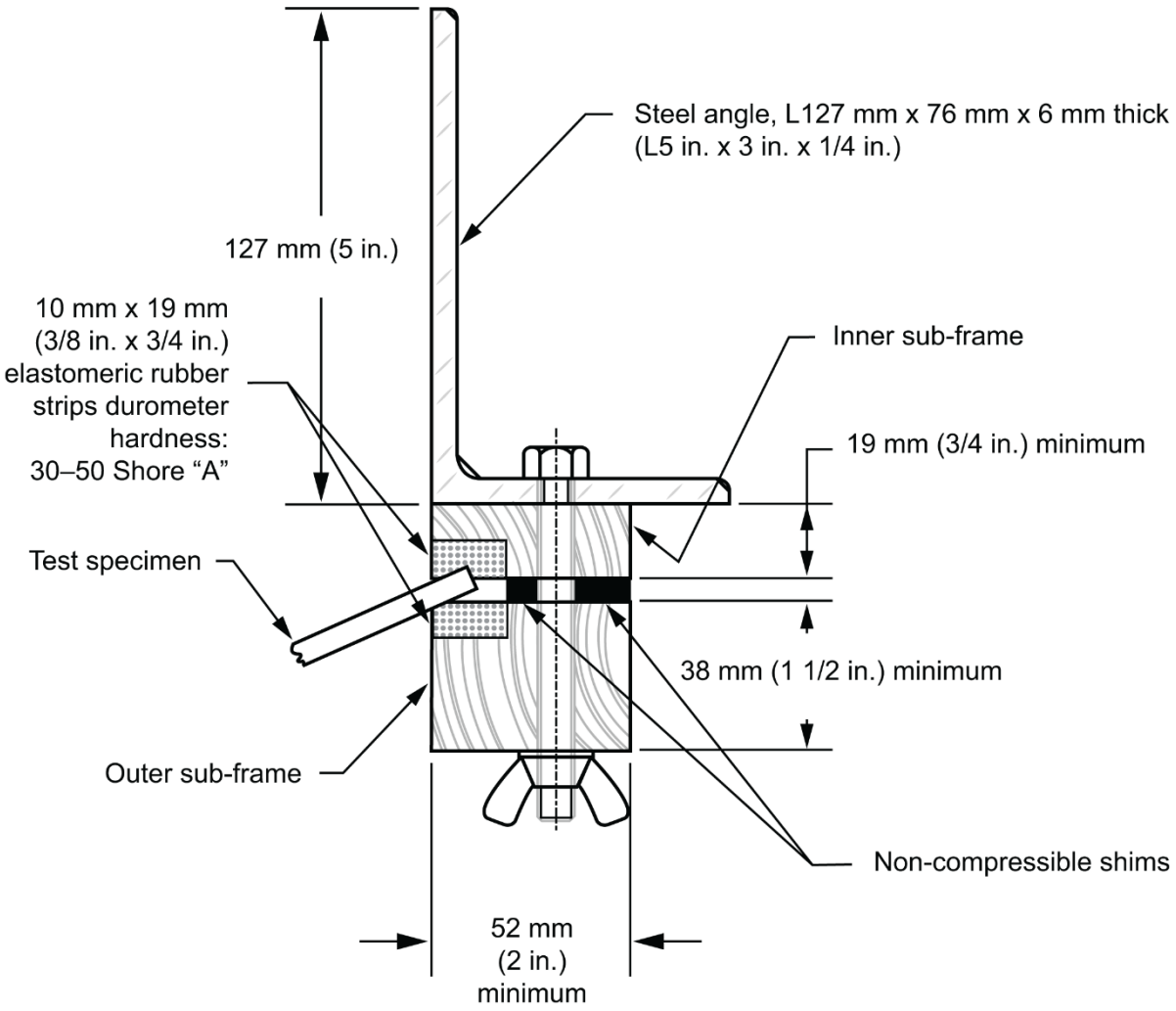

Figure 7 — Detail of section B-B

© CGSB 2026 – All rights reserved

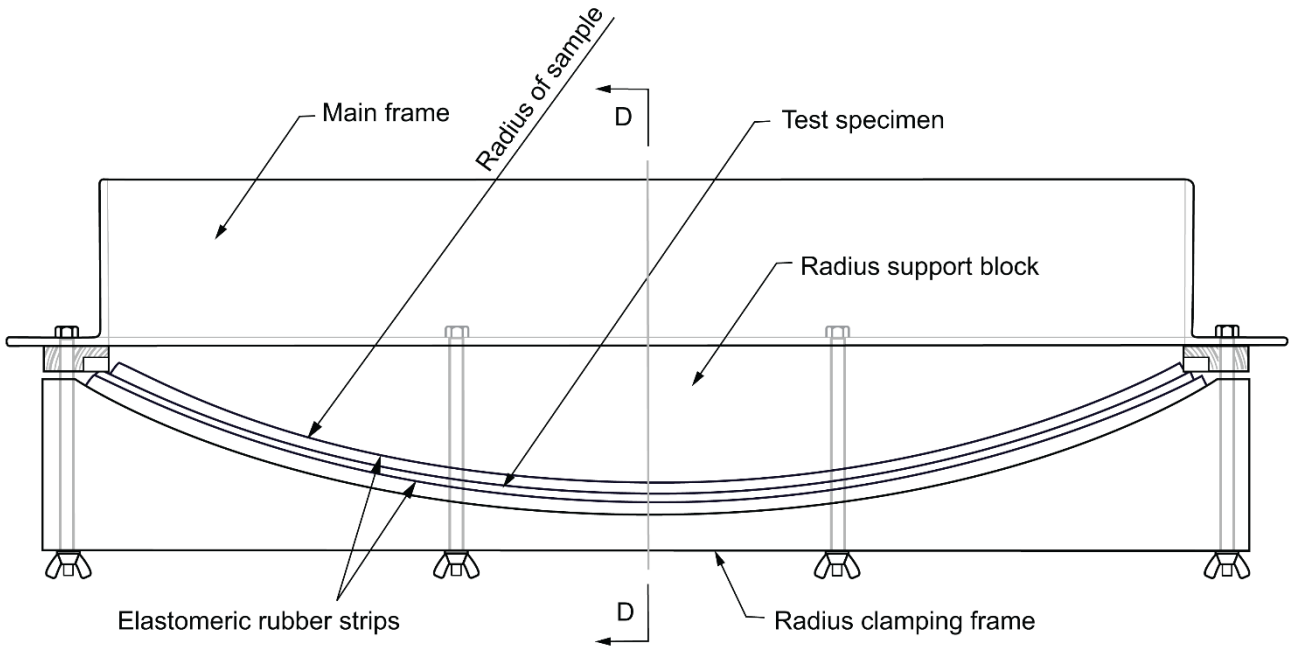

Figure 8 ─ Detail of section C-C

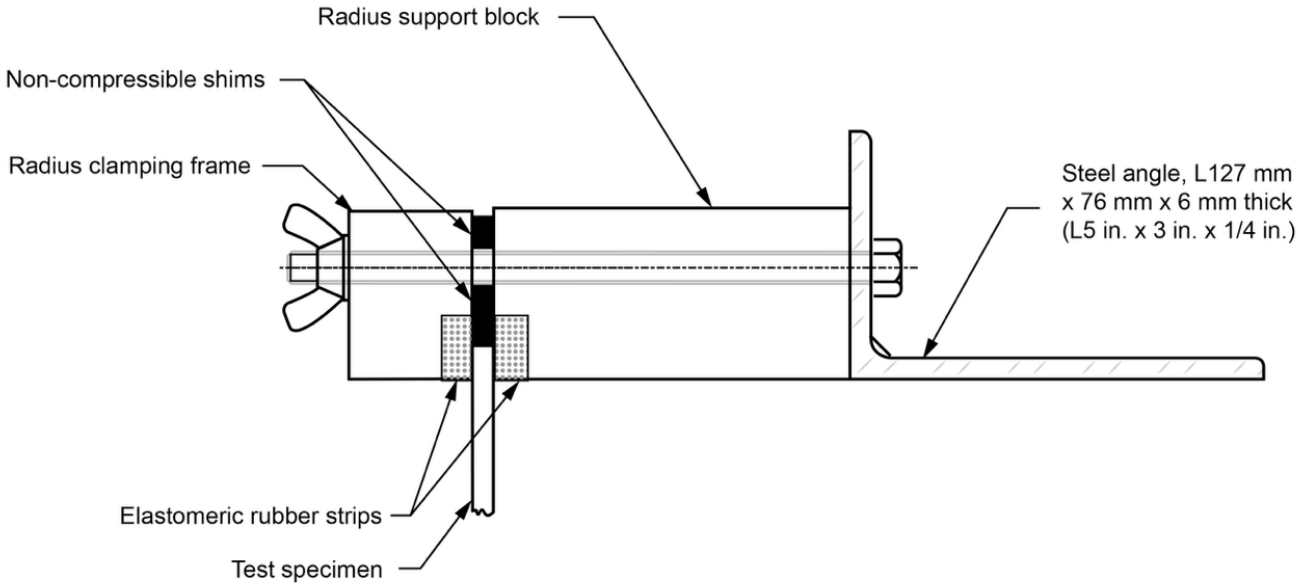

Figure 9 – Detail of section D-D

© CGSB 2026 – All rights reserved

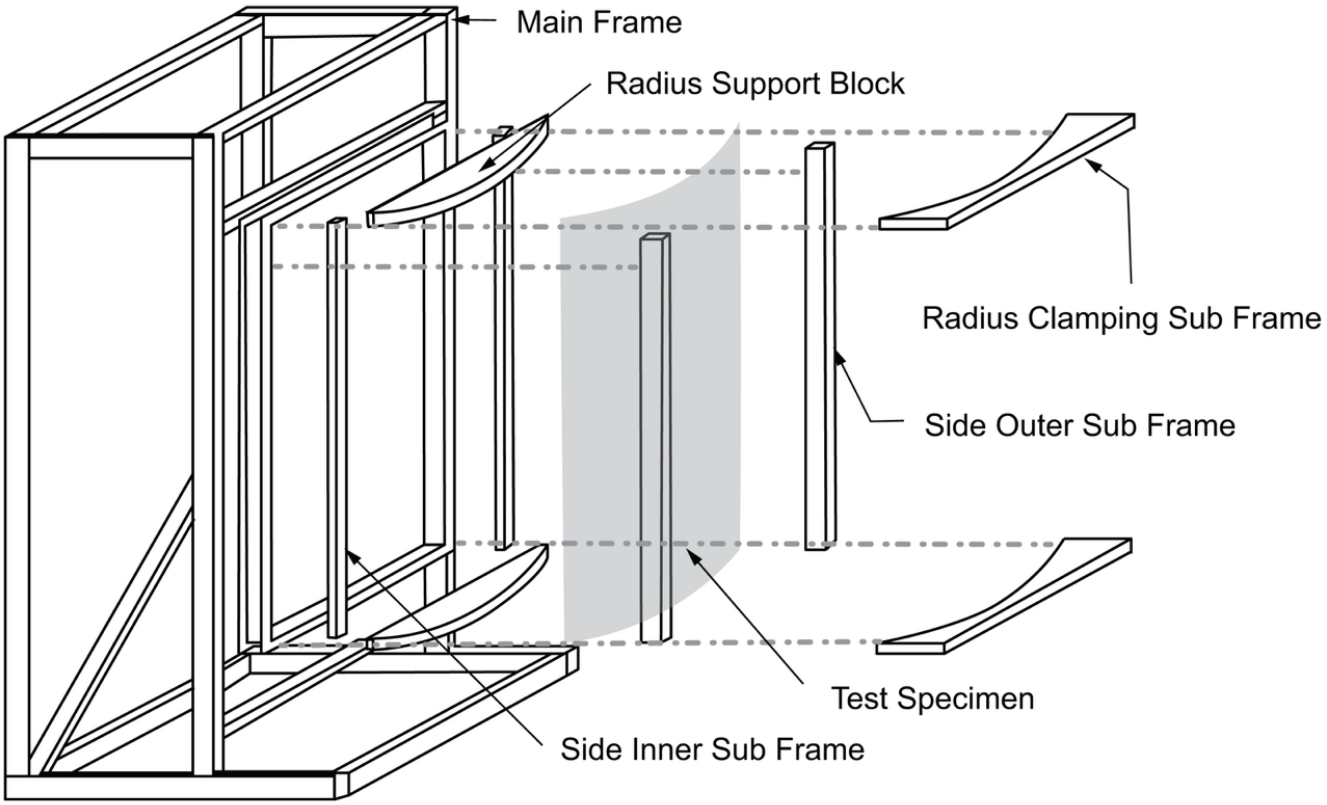

Figure 10 – Bent glass impact test frame (Exploded view)

© CGSB 2026 – All rights reserved

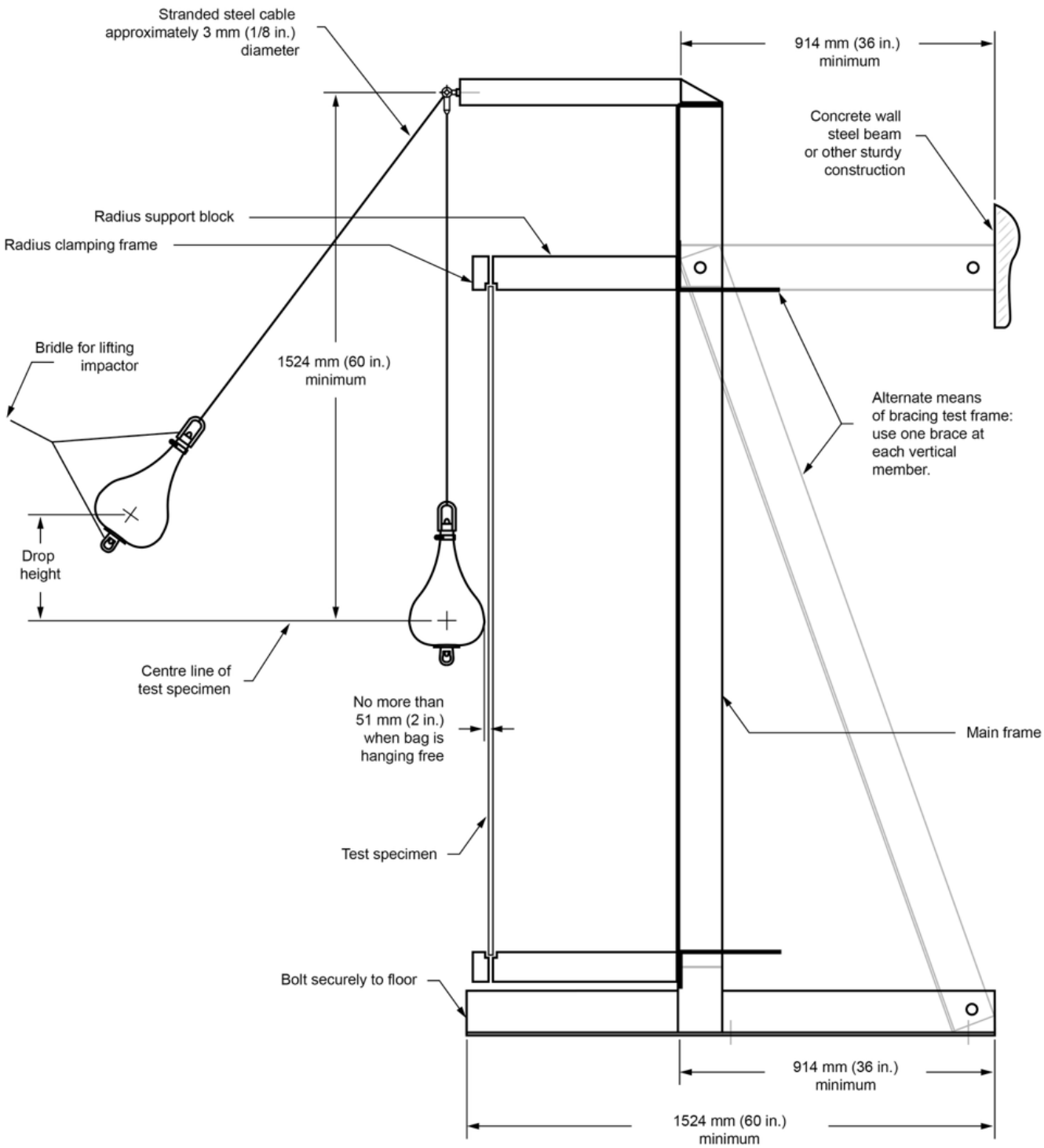

Figure 11 — Impact test frame — Bent glazing — Side view – Section D-D

© CGSB 2026 – All rights reserved

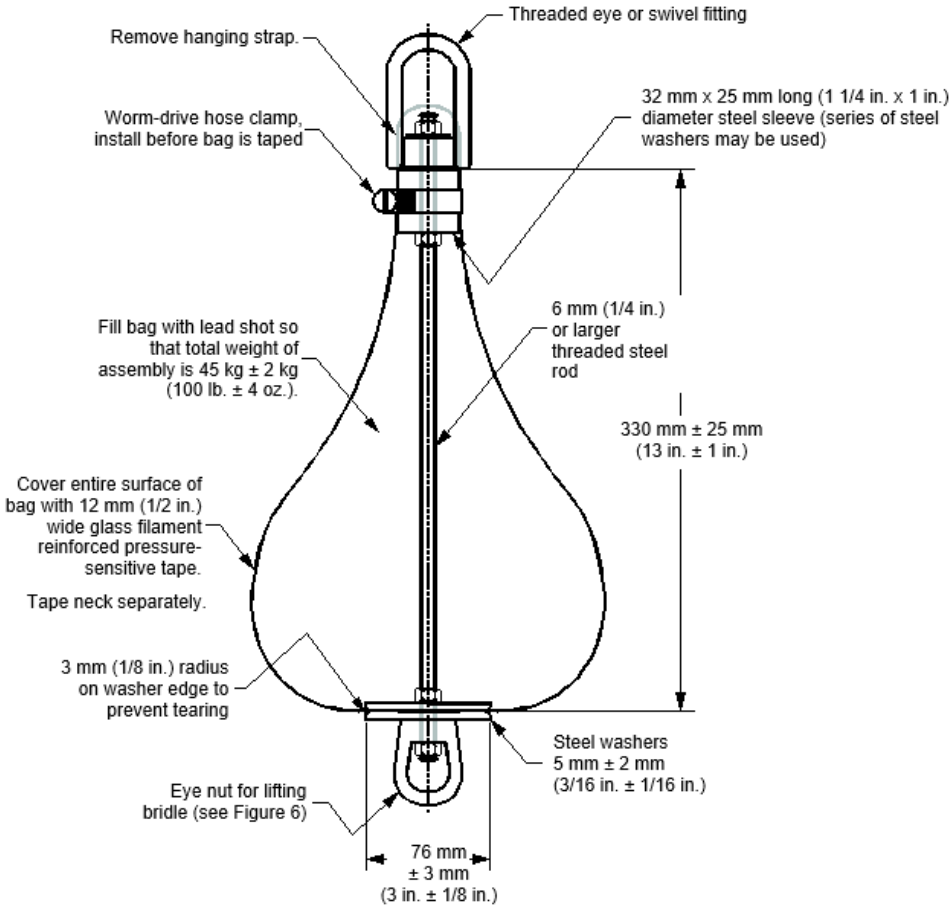

Figure 12 — Impactor

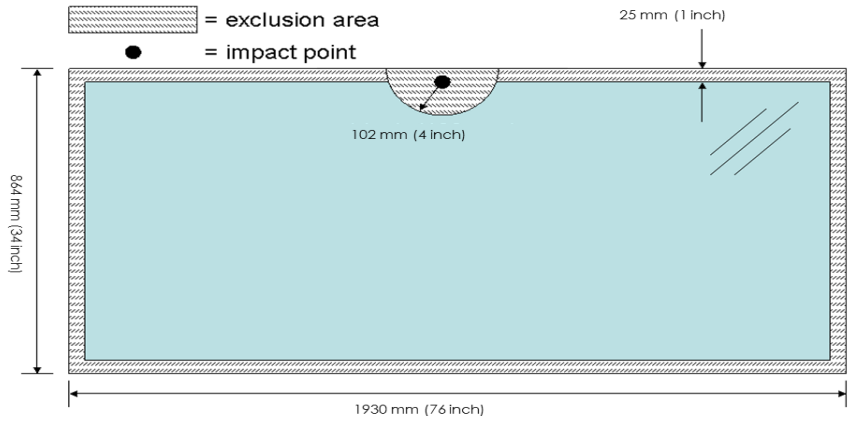

Figure 13 — Centre punch fragmentation

© CGSB 2026 – All rights reserved

Annex A

(informative)

Areas of human impact

A.1 General

Areas of human impact include, but may not be limited to, doors, glazed panels adjacent to doors, glazed exterior/interior passageway doors, storm (combination) doors, guards, patio doors, and shower and bathtub doors and their enclosures. See ANSI Z97.1 for further information.

© CGSB 2026 – All rights reserved

Annex B
(informative)
Climate Resiliency

1. Introduction

The expectation is that in the coming decades, the climate of Canada will become warmer, with some locations experiencing higher wind speed, more intense and frequent rain events, and as a result heightened wind-driven rain loads. The ability of construction materials and built assemblies to continue to perform under changing environmental conditions is called ‘climate resiliency’.

Users of this standard should be aware that tests noted in the CAN/CGSB glass standards are made at specified conditions of temperature, relative humidity, etc. In-service conditions may be different and could affect the performance of some glass, safety glazing, and insulating glass unit products. Currently, the differences between test and in-service conditions are not considered significant but this could change in the future as the climate changes.

The user should refer to local building codes to ensure compliance with local jurisdiction in selecting the appropriate product for their application based on current climatic design data. Users should also consult with manufacturers of glass products (for example, the manufacturer of an interlayer for laminated glass, or perimeter sealants for insulating glass units) to determine if in-service conditions that are different from test conditions should be taken into account during product selection. Technology is rapidly evolving in the glass industry with constant introduction of new products. Design tools are now available that allow the user to estimate future climatic design data which can be used to discuss with manufacturers future possible service conditions in order to select the appropriate product for the intended application.

Users of the CGSB glass standards should note that each standard has a limited scope. The test methods are intended to address specific performance aspects. For example, CAN/CGSB-12.1 *Safety Glazing* addresses reducing injury to a person impacting a safety glazing product. It does not directly address other performance aspects such as strength, fire rating or appearance. Climate change may create new performance needs not previously considered such as wind-borne debris impact or higher wind loads which may be addressed in whole or in part by other standards. In some cases, a desired performance aspect may not be addressed by an available standard in which case, the assistance of a design professional should be obtained.

2. Guidance for Climate Resiliency

What guidance can be offered to building designers, glass and glazing product manufacturers, and builders now, when revised climate data that takes into account projections of climate change is not yet fully available and continues to evolve? Construction of new buildings and renovation of existing buildings cannot be stopped. Based on the available research on this topic as described in this Annex, some recommendations for the selection and installation of fenestration products are provided in Table B.1.

© CGSB 2026 – All rights reserved

Table B.1

Climate Resiliency Potential Impacts

Climate change effects	Effects on glass and glazing products	Recommendations for selection of products
Higher ambient annual and daily air temperatures and humidity	Higher temperatures, change in flexibility and stiffness	Select materials that are more dimensionally stable with temperature change (lower coefficient of thermal expansion) to control expansion and contraction, and flexibility or stiffness. Applies especially to glass and glazing products with plastic components — interlayers, vinyl, fibreglass, and composite spacers for insulating glass units — that are directly exposed to solar radiation.
		Select products with enhanced elasticity and resistance to repeated movement cycles, and which maintain flexibility or stiffness at anticipated in-service temperatures. Applies to organic jointing and sealing products such as butyl rubbers, polyurethanes, and polysulphides in glass, laminated glass, and insulating glass units.
	Accelerated aging due to more prolonged periods of higher temperature (especially when wet) and from exposure to higher levels of UV-B radiation	Select products of proven and heightened resistance to heat aging and UV radiation. Applies to insulating glass units with organic and polymer-based spacers and sealants and laminated glass with interlayers directly exposed to solar radiation.
	Increased risk of fire exposure, especially at the wildland urban interface (WUI)	Select fire-rated products. Applies to glass, safety glazing, and insulating glass units in fenestration products.
	Increased risk of thermal stress related breakage	Select heat treated glass, and where safety glazing is needed, fully tempered glass. Applies to glass and glazing exposed to solar radiation that simultaneously are affected by thermal bridging, such as balcony guards, high thermal performance windows, doors, and skylights, and other fenestration assemblies.

© CGSB 2026 – All rights reserved

Climate change effects	Effects on glass and glazing products	Recommendations for selection of products
Increase in freeze / thaw cycles	Increase in temperature fluctuations, including more frequent and extreme freeze-thaw cycles	Select products that are designed to allow drainage of water that penetrates into glazing cavities. Applies to exposed elements such as balcony guards.
Increase in precipitation, including wind driven rain	Increase in wind-driven rain loads. Higher average temperature and humidity within fenestration product frames and in installation openings, together with increased incidence of water in more prolonged contact with glass and glazing products	Select fenestration products that enhance drainage of water from surfaces and minimize the likelihood of the entry and retention of water in fenestration product frames. Applies to fenestration products of all types incorporating laminated glass with interlayers prone to delamination under moisture and fenestration products with insulating glass units.
		Select materials that are more dimensionally stable when wetted and that have enhanced resistance to degradation from contact with warm liquid water (hydrolysis). Applies to laminated glass with interlayers prone to delamination under moisture and insulating glass units with organic perimeter sealants.
		Select materials with enhanced resistance to corrosion, or take steps to reduce the likelihood of wetting of corrosion susceptible materials. Applies to insulating glass units with sputter-coated low-e coated glass.
Increased Wind Speed and Design Pressures	Increased magnitude and frequency of extreme wind events (windstorms, tornadoes, hurricanes, down drafts, derechos)	Select fenestration products that incorporate glass and glazing with greater resistance to higher design wind pressure and with resistance to wind borne debris where required. Refer to climatic data in latest building codes for changes in wind pressure that may require the use of safety glazing such as fully tempered and / or laminated glass.

The identification of broad classes of materials that are at risk from climate change effects is not meant to indicate that products made from them should not be used. Instead, building owners, designer professionals, specifiers, and builders should use the recommendations as guidance to discuss with glazing material and product manufacturers how to create resiliency to climate change.

© CGSB 2026 – All rights reserved

Further guidance and literature to address the following potential future consequences of climate change on safety glazing products:

1. ASTM E997 *Standard Test Method for Evaluating Glass Breakage Probability Under the Influence of Uniform Static Loads by Proof Load Testing*
2. ASTM E1300 *Standard Practice for Determining Load Resistance of Glass in Building*
3. CNR-DT 210 *Construction and Control of Buildings with Structural Elements*
4. CSA A440.2-19/CSA A440.3 -*Fenestration energy performance / User guide to CSA A440.2-14, Fenestration energy performance* (ansi.org) ANNEX B
5. CSA A440.4 Window, door, and skylight installation (ansi.org)
6. CSA A440.6 *High exposure fenestration installatio*n (ansi.org)
7. CSA A440S1 Product | CSA Group
8. CSA S478 *Durability in buildings*
9. CSA S520 *Design and construction of low-rise residential and small buildings to resist high wind*
10. European 3 part standard CEN/TD 19100 *Design of glass structures*
11. ISO 12543-4 *Glass in building — Laminated glass and laminated safety glass — Part 4: Test methods for durability*
12. ISO 16932 *Glass in building — Destructive-windstorm-resistant security glazing — Test and classification*
13. ISO/DIS 19916-1: *Glass in building — Vacuum insulating glass — Part 1: Basic specification of products and evaluation methods for thermal and sound insulating performance*
14. ISO 19916-3 *Glass in building — Vacuum insulating glass — Part 3: Test methods for evaluation of performance under temperature differences*
15. ISO 20492-1 *Glass in buildings - Insulating glass — Part 1: Durability of edge seals by climate tests*

Reference literature:

1. Infrastructure Canada-Climate-Resilient Buildings and Core Public Infrastructure initiatives NR16-236-2018-eng.pdf
2. Dae Il Jeong, Alex J. Cannon, Robert J. Morris, *Projected changes to wind loads coinciding with rainfall for building design in Canada based on an ensemble of Canadian regional climate model simulations*, Climatic Change (2020) 162:821–835, https://doi.org/10.1007/s10584-020-02745-y
3. Pacific Climate Impacts Consortium: Design Value Explorer Design Value Explorer | Pacific Climate Impacts Consortium

© CGSB 2026 – All rights reserved

Bibliography

ASTM C1464 — *Standard Specification for Bent Glass.* Available from: www.astm.org

BS EN 12150 – *Toughened Glass Certification*. Available from: European and International standards online store

© CGSB 2026 – All rights reserved