Transport Canada Transports Canada

TP 13430E
(07/2026)

STANDARD FOR THE TONNAGE MEASUREMENT OF VESSELS

SECOND EDITION
JULY 2026

Canada

Responsible Authority	Approval
The Executive Director, Navigation Safety & Environmental Programs, Marine Safety is responsible for this document, including any change, correction, or update.	**"Original signed by Naim Nazha"** Naim Nazha Executive Director Navigation Safety & Environmental Programs Marine Safety **Date signed:**

Original Date Issued: 2000-02-25 **Date Revised: 2026-07-01**

© Her Majesty the Queen in Right of Canada, as represented by the Minister of Transport, 2000.

Permission is granted, by Transport Canada, to copy this TP 13430E as required. While use of this material has been authorized, Transport Canada shall not be responsible for the manner in which the information is presented, nor for any interpretations thereof. This TP 13430E may not be updated to reflect amendments made to the original content. For up-to-date information, contact Transport Canada.

ISBN 978-0-662-40832-1
Catalogue No. T29-33/2026E-PDF

TP 13430E
(07/2026)

TC-1002422

DOCUMENT INFORMATION

Title	**STANDARD FOR THE TONNAGE MEASUREMENT OF VESSELS**		
TP No.	**13430E**	**Edition**	**second** **RDIMS #3963843 v4**
Catalogue No.	**T29-33/2026E-PDF**	**ISBN**	**ISBN 978-0-662-40832-1**
Originator	Program & Technical Training Services (AMSB) Tower C, Place de Ville 330 Sparks Street, 11th Floor Ottawa, Ontario K1A 0N8	**Telephone** **Fax** **E-mail** **URL**	(613) 990-9850 (613) 993-8196 marinesafety-securitemaritime@tc.gc.ca http://www.tc.gc.ca/eng/marinesafety/menu.htm

REVISIONS

Last Review **2026-07-01**

Next Review

Revision No.	Date of Issue	Affected Pages	Author(s)	Brief Description of Change
1	**2007-11-09**		**V. Pyetkov**	**Updating the terminology to be consistent with that in the *Canada Shipping Act 2001* (CSA 2001) and the Vessel Registration and Tonnage Regulations, which incorporate by reference TP 13430E. Part 3 rewritten to introduce a new method for tonnage measurement of vessels less than 24 m in length which uses the product of the three vessel's dimensions reduced by a tonnage coefficient.**
2	**2012-10-25**	**5; 20-23**	**V.Pyetkov**	**Introduction of the non-calculated Assigned Formal Tonnage.**
3	**2026-07-01**	**2; 5; 20-23**	**V.Petkov**	**Updating the regulatory references in the definition of length of a vessel (L) in section 1.1.1.** **Removal of the non-calculated Assigned Forman Tonnage**

TABLE OF CONTENTS

INTRODUCTION 1

PART 1 GENERAL 2

1.1 MEASUREMENT OF LENGTH (L) 2

1.2 DEFINITIONS 3

PART 2 TONNAGE MEASUREMENT OF VESSELS 24 METRES IN LENGTH OR MORE 5

2.1 GENERAL 5

2.2 DEFINITIONS 5

2.3 UNITS OF MEASUREMENT AND DEGREE OF ACCURACY 7

2.4 GROSS TONNAGE FORMULA 7

2.5 NET TONNAGE FORMULA 8

2.6 CHANGE OF NET TONNAGE 9

2.7 CALCULATION OF VOLUMES 10

2.8 CALCULATION OF ENCLOSED SPACES BELOW THE UPPER DECK 11

2.9 CALCULATIONS OF THE VOLUME OF ENCLOSED SPACES ABOVE THE UPPER DECK 15

2.10 CALCULATION OF THE VOLUME OF CARGO SPACES 17

PART 3 TONNAGE MEASUREMENT OF VESSELS LESS THAN 24 METRES IN LENGTH 20

3.1 GENERAL 20

3.2 DEFINITIONS 20

3.3 UNITS OF MEASUREMENT AND DEGREE OF ACCURACY 21

3.4 MEASUREMENT OF VESSELS 21

3.5 GROSS TONNAGE 21

3.6 NET TONNAGE 23

PART 4 FIGURES 24

INTRODUCTION

This Standard is issued by the Department of Transport (referred to as the Department) for the measurement of vessels in accordance with the *Vessel Registration and Tonnage Regulations, SOR/2007-126* made pursuant to the *Canada Shipping Act, 2001.*

The issue of this 2nd edition of the TP 13430E, Standard for the Tonnage Measurement of Vessels on November 09, 2007 replaces the 1st edition of the TP 13430E, Standard for the Tonnage Measurement of Ships, dated February 25, 2000, in its entirety.

For vessels whose tonnage was determined on or after October 17, 1994 but before February 25, 2000, reference should be made to TP 12234E. For vessels whose tonnage was determined before October 17, 1994, reference should be made to TP 5008E.

The matter of interpretation with respect to tonnage measurement is the responsibility of the Department. Direct queries in this regard may be addressed to the nearest Transport Canada Centre.

PART 1 GENERAL

1.1 MEASUREMENT OF LENGTH (L)

1.1.1 **Length of a vessel (L)** is the length used for the purposes of Part 2 – Tonnage of the *Vessel Registration and Tonnage Regulations (VRTR)* made pursuant to the *Canada Shipping Act, 2001* and is defined in section 1 of *VRTR* as the greater of:

(a) 96% of the total length measured on a waterline at 85% of the least moulded depth measured from the top of keel; and

(b) the length from the fore side of the stem to the axis of the rudder stock on the waterline referred to in subsection (a) above.

1.1.2 The lengths corresponding to those defined in subsections 1.1.1 (a) and (b) are depicted below, and in Part 4 – FIGURES, Figure 1.1.

1.1.3 In a vessel designed with a rake of keel, the waterline on which the length is measured shall be parallel to the designed waterline.

1.1.4 If, for the purpose of Canadian registration or maintenance of Canadian registration, calculation of vessel's tonnage is required by respective provisions of *VRTR*, length (L) of a vessel must be determined using the explanation above to decide which method of tonnage measurement is applicable to the vessel (see Part 2 or Part 3 of this Standard as applicable).

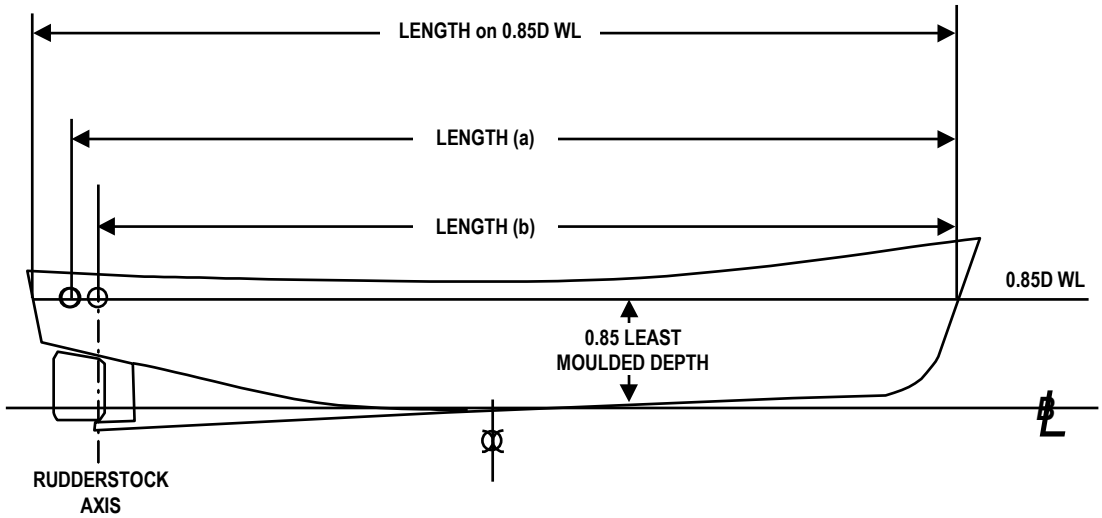

1.2 DEFINITIONS

The following definitions apply in this Standard:

1.2.1 Enclosed Spaces

1.2.1.1 Subject to subsection 1.2.1.2, enclosed spaces are all those spaces that are bounded by the vessel's hull, by fixed or portable partitions or bulkheads or by decks or coverings other than permanent or moveable awnings. No break in a deck, or any opening in the vessel's hull, in a deck or in a covering of a space, or in the partitions or bulkheads of a space, nor the absence of a partition or bulkhead, precludes a space from being included in an enclosed space.

1.2.1.2 The following are not enclosed spaces:

(a) spaces below the upper deck open to the sea (See Section 2.7.3.1 (e) for further elaboration);

(b) excluded spaces – see definition for "excluded spaces."

1.2.1.3 Spaces that fulfill any one of the three conditions set out in the subsection 1.2.2.2 (a) to (c) are enclosed spaces.

1.2.2 Excluded Spaces

1.2.2.1 Subject to sub-section 1.2.2.2, the spaces referred to in subsections (a) to (e) below are excluded spaces and must not be included in the volume of enclosed spaces:

(a) (i) A space within an erection opposite an end opening extending from deck to deck, except for a curtain plate of a depth not exceeding by more than 25 millimetres the depth of the adjoining deck beams, if the opening has a breadth equal to or greater than 90% of the breadth of the deck at the line of the opening of the space. This provision is to be applied, so as to exclude from the enclosed spaces, only the space between the actual end opening and a line drawn parallel to the line or face of the opening at a distance from the opening equal to one half of the width of the deck at the line of the opening (see Figure 2.3);

(ii) If the width of the space, because of any arrangement except by convergence of the outside plating, becomes less than 90% of the breadth of the deck, only the space between the line of the opening and a parallel line drawn through the point where the athwartships width of the space becomes equal to, or less than, 90% of the breadth of the deck shall be excluded from the volume of enclosed spaces (see Figures 2.4, 2.5 and 2.6);

(iii) If an interval that is completely open except for bulwarks or open rails separates any two (2) spaces, the exclusion of one or both of which is permitted under subparagraphs (i) or (ii) or both, the exclusion does not apply if the separation between the two spaces is less than the least half breadth of the deck in way of the separation (see Figures 2.7 and 2.8);

(b) A space under an overhead deck covering open to the sea and weather, having no other connection on the exposed sides with the body of the vessel than the stanchions necessary for its support. In such a space, open rails or a bulwark and curtain plate may be fitted or stanchions fitted at the vessel's side, provided that the distance between the top of the rails or the bulwark and the curtain plate is not less than 0.75 metres or one third of the height of the space, whichever is the greater (see Figure 2.9);

(c) A space in a side-to-side erection that is directly in the way of the opposite side opening and is not less in height than 0.75 m or one third of the height of the erection, whichever is the greater. If the opening in such an erection is provided on one side only, the space to be excluded from the volume of enclosed spaces is limited inboard from the opening to a maximum of one-half of the breadth of the deck in the way of the opening (see Figure 2.10);

(d) A space in an erection immediately below an uncovered opening in the deck overhead, if the opening is exposed to the weather and the space excluded from enclosed spaces is limited to the area of the opening (see Figure 2.13);

(e) A recess in the boundary bulkhead of an erection that is exposed to the weather and the opening of which extends from deck to deck without means of closing, if the interior width is not greater than the width at the entrance and its extension into the erection is not greater than twice the width of its entrance (see Figure 2.11);

1.2.2.2 If a space referred to in subsections 1.2.2.1 (a) to (e) fulfills any of the following three conditions such a space shall be treated as an enclosed space:

(a) the space is fitted with shelves or other means for securing cargo or stores; (for example, stanchions, fences and railings to keep livestock in the corrals); or

(b) the openings are fitted with any means of closure; or

(c) the construction provides the possibility of the openings being closed.

1.2.2.3 The space between the side longitudinal bulkhead of a deckhouse and the bulwark below a deck extending from side to side, supported by stanchions or vertical plates connected to the bulwarks, must be treated as an excluded space in accordance with paragraphs 1.2.2.1 (b) and 1.2.2.1 (c) (see Figure 2.14).

1.2.2.4 In vessels with rounded gunwales, the breadth (b) of the deck in way of the opening is measured as shown in Figure 2.12.

1.2.3 **Gross Tonnage (GT)** is the measure of the overall size of a vessel.

1.2.4 **Net Tonnage (NT)** is the measure of the useful capacity of a vessel.

1.2.5 **Watertight**, in respect of a means of closure, means that it is capable of preventing the passage of water through an opening in either direction, under the maximum head of water to which the opening may be exposed.

1.2.6 **Weathertight**, in respect of a means of closure, means capable of preventing the passage of water into a vessel in any sea condition.

PART 2 TONNAGE MEASUREMENT OF VESSELS 24 METRES IN LENGTH OR MORE

2.1 GENERAL

2.1.1 Tonnage measurement of a vessel that is 24 metres in length (L)* or more shall be carried out in accordance with the provisions of this part.

2.2 DEFINITIONS

The following definitions apply in this Part:

2.2.1 **Amidships** is the midpoint of the length (L) of a vessel where the forward terminal of that length coincides with the fore side of the stem. Length of a vessel (L) is defined in Section 1.1.

2.2.2 **Breadth** is the maximum breadth of the vessel, measured amidships to the moulded line of the frame in a vessel with a metal shell and to the outer surface of the hull in a vessel with a shell of any other material (see Figure 2.1).

2.2.3 **Camber** is the vertical distance measured on the centre line plane of the vessel, from the underside of the deck plating to a line athwartships between the points where the underside of the deck plating meets the inner side of the vessel's shell plating (see Figure 2.2).

2.2.4 **Cargo Spaces** are enclosed spaces included in the calculation of the net tonnage that are appropriated for the transport of cargo which is to be discharged from the vessel, if the spaces have also been included in the calculation of the gross tonnage. These cargo spaces are identified by the readily visible permanent markings CC (cargo compartment). The total volume of cargo spaces as defined above is designated as V_c.

2.2.5 **Moulded Depth (D)** of a vessel is determined by measuring the vertical distance amidships:

(a) if the vessel has a metal shell, from the moulded line of the upper deck at the side to the point where the line of the hull intersects the side of the keel (see Figure 2.15);

(b) if the vessel is a wood or composite vessel, from the moulded line of the upper deck at the side to the point at the lower edge of the keel rabbet (see Figure 2.15);

(c) if the vessel is one in which the form at the lower part of the midship section is of a hollow character or on which thick garboards are fitted, from the moulded line of the upper deck at the side to the point where the moulded line of shell when continued inwards intersects the side of the keel (see Figure 2.15);

(d) if the vessel has rounded gunwales, from the point of intersection of the moulded lines of the upper deck and side shell plating, the lines extending as though the gunwales were of angular design, to the point referred to in paragraphs (a) to (c), as the case may be (see Figure 2.15);

(e) if the vessel has a stepped upper deck the raised part of which extends over amidships, from the point at which a line of reference extending along the lower part of the upper deck parallel to the raised part of that deck intersects amidships to the point referred to in paragraphs (a) to (c) as the case may be (see Figure 2.17); and

(f) if the vessel does not meet the requirements for upper deck as defined in subsection 2.2.10, from the top of the upper strake or gunwale to the point referred to in paragraphs (a) to (c), as the case may be.

---

* Length of a vessel (L) as defined in section 1 of the *Vessel Registration and Tonnage Regulations* (see also section 1.1 of this Standard).

2.2.6 **Moulded Draught (d)** referred to in the Net Tonnage formula in Section 2.5 shall be one of the following draughts:

(a) if the vessel is a Load Lines Convention vessel, the draught corresponding to the summer load line assigned to the vessel in accordance with that Convention. A timber load line must not be used to calculate moulded draught;

(b) if the vessel is a Safety Convention passenger vessel, the draught corresponding to the deepest subdivision load line assigned in accordance with SOLAS;

(c) if the vessel is not a Load Lines Convention vessel, but has been assigned a load line in accordance with the laws of the state whose flag the vessel is entitled to fly, the draught corresponding to the summer load line so assigned;

(d) if the vessel is a vessel to which no load line has been assigned and in respect to which the draught is restricted in accordance with the laws of the state whose flag the vessel is entitled to fly, the maximum permitted draught; and

(e) in the case of any other vessel, 75% of the moulded depth amidships determined in accordance with the definition for "Moulded Depth" in subsection 2.2.5.

2.2.7 **Moulded Line of Hull**

(a) if the vessel has a metal shell, the outer surface of the frame of the hull without the plating (moulded frame line); and

(b) if the vessel has a shell of a material other than metal, the outer surface of the shell.

2.2.8 **Passenger** is as defined in Section 2 of the CSA, 2001.

2.2.9 **Tonnage Length** means the horizontal distance between the extremes of the upper deck (see Figure 2.21a), or in the case of a stepped upper deck, the extremes of the projected line of upper deck (see Figure 2.21b).

2.2.10 **Upper Deck**

(a) the uppermost complete deck exposed to weather and sea that has permanent means of weathertight closing of all openings in the weather part thereof, and below which all openings in the sides of the vessel are fitted with permanent means of watertight closing (see Figure 2.16); and

(b) in the case of a vessel that has a stepped upper deck, the lowest line of the exposed deck and the continuation of that line parallel to the upper part of the deck is taken as the upper deck (see Figures 2.16 and 2.17).

2.2.10.1 A discontinuity in the upper deck that extends over the full breadth of the vessel and is in excess of 1 metre in length is treated as a step (see Figure 2.18).

2.2.10.2 Steps situated outside the length (L) (as defined in Section 1.1) are not to be considered.

2.2.10.3 A discontinuity in the upper deck that does not extend to the side of the vessel is treated as a recess located below the upper deck level (see Figure 2.19).

2.2.10.4 In a vessel that has openings in its side below the uppermost deck, if the openings are not closed but limited inboard by weathertight bulkheads and decks, the deck below the openings is considered the upper deck (see Figure 2.20).

2.3 UNITS OF MEASUREMENT AND DEGREE OF ACCURACY

2.3.1 All measurements are to be taken in metres to the nearest centimetre. All lengths are to be measured in a fore and aft direction, breadths athwartships and heights or depths vertically. This order is to be followed on all tonnage calculations.

2.3.2 The volume in relation to any vessel or space in a vessel is to be in cubic metres.

2.3.3 The following calculations are to be carried out to three decimal places, the third figure to be increased by one if the fourth is 5 or more:

- One-third round of beam;
- The common interval between the transverse ordinates;
- The common interval between the breadths in each transverse section;
- The common interval between the breadths in between deck space and in erections;
- One-third of the common interval between the transverse ordinate;
- One-third of the common interval between the breadths in each transverse section;
- One-third of the common interval between the breadths in the between-deck space and in erections.

2.3.4 The following calculations are to be carried out to two decimal places, the second figure to be increased by one if the third is 5 or more:

- The area of transverse sections;
- The mean height of the between-deck space.

2.4 GROSS TONNAGE FORMULA

2.4.1 The gross tonnage (GT) of a vessel is to be calculated using the following formula:

$$\mathbf{GT = K_1V}$$

where
V = total volume of all enclosed spaces of the vessel in cubic metres;

and
$K_1 = 0.2 + 0.02 \log_{10} V$ (or as shown in the Table of Coefficients).

2.5 NET TONNAGE FORMULA

2.5.1 The net tonnage (NT) of a vessel is to be calculated using the following formula:

$$\mathbf{NT = K_2 V_c (4d/3D)^2 + K_3 (N_1 + N_2/10)}$$

where:

V_c	=	total volume of cargo spaces in cubic metres;
K_2	=	$0.2 + 0.02 \log_{10} V_c$ (or as shown in the Table of Coefficients);
K_3	=	1.25 x (GT + 10,000)/10,000;
D	=	the moulded depth amidships in metres;
d	=	the moulded draught amidships in metres;
N_1	=	the number of passengers in cabins containing not more than eight berths;
N_2	=	the number of other passengers;
N_1+N_2	=	the number of passengers as shown in the vessel's passenger certificate;
GT	=	the gross tonnage of the vessel as determined in accordance with Section 2.4.

NOTES:

2.5.1.1 If the sum of N_1 and N_2 is less than 13, N_1 and N_2 are to be taken as zero.

2.5.1.2 The factor $(4d/3D)^2$ is not to be taken as greater than unity.

2.5.1.3 The term $K_2V_c(4d/3D)^2$ is not to be taken as less than 0.25 GT.

2.5.1.4 NT is not to be taken as less than 0.30 GT.

TABLE 1 — COEFFICIENT K_1 AND K_2 FOR SECTIONS 2.4 AND 2.5

V or V_c = Volume in m^3

V or V_c	K_1 or K_2	V or V_c	K_1 or K_2	V or V_c	K_1 or K_2	V or V_c	K_1 or K_2
10	0.2200	45000	0.2931	330000	0.3104	670000	0.3165
20	0.2260	50000	0.2940	340000	0.3106	680000	0.3166
30	0.2295	55000	0.2948	350000	0.3109	690000	0.3168
40	0.2320	60000	0.2956	360000	0.3111	700000	0.3169
50	0.2340	65000	0.2963	370000	0.3114	710000	0.3170
60	0.2356	70000	0.2969	380000	0.3116	720000	0.3171
70	0.2369	75000	0.2975	390000	0.3118	730000	0.3173
80	0.2381	80000	0.2981	400000	0.3120	740000	0.3174
90	0.2391	85000	0.2986	410000	0.3123	750000	0.3175
100	0.2400	90000	0.2991	420000	0.3125	760000	0.3176
200	0.2460	95000	0.2996	430000	0.3127	770000	0.3177
300	0.2495	100000	0.3000	440000	0.3129	780000	0.3178
400	0.2520	110000	0.3008	450000	0.3131	790000	0.3180
500	0.2540	120000	0.3016	460000	0.3133	800000	0.3181
600	0.2556	130000	0.3023	470000	0.3134	810000	0.3182
700	0.2569	140000	0.3029	480000	0.3136	820000	0.3183
800	0.2581	150000	0.3035	490000	0.3138	830000	0.3184
900	0.2591	160000	0.3041	500000	0.3140	840000	0.3185
1000	0.2600	170000	0.3046	510000	0.3142	850000	0.3186
2000	0.2660	180000	0.3051	520000	0.3143	860000	0.3187
3000	0.2695	190000	0.3056	530000	0.3145	870000	0.3188
4000	0.2720	200000	0.3060	540000	0.3146	880000	0.3189
5000	0.2740	210000	0.3064	550000	0.3148	890000	0.3190
6000	0.2756	220000	0.3068	560000	0.3150	900000	0.3191
7000	0.2769	230000	0.3072	570000	0.3151	910000	0.3192
8000	0.2781	240000	0.3076	580000	0.3153	920000	0.3193
9000	0.2791	250000	0.3080	590000	0.3154	930000	0.3194
10000	0.2800	260000	0.3083	600000	0.3156	940000	0.3195
15000	0.2835	270000	0.3086	610000	0.3157	950000	0.3196
20000	0.2860	280000	0.3089	620000	0.3158	960000	0.3196
25000	0.2880	290000	0.3092	630000	0.3160	970000	0.3197
30000	0.2895	300000	0.3095	640000	0.3161	980000	0.3198
35000	0.2909	310000	0.3098	650000	0.3163	990000	0.3199
40000	0.2920	320000	0.3101	660000	0.3164	1000000	0.3200

Note: Coefficients K_1 or K_2 at intermediate values of V or V_c shall be obtained by linear interpolation.

2.6 CHANGE OF NET TONNAGE

2.6.1 A vessel, to which Load Lines referred to in paragraphs (a) and (b) of the definition “moulded draught” are concurrently assigned, shall be given only one net tonnage as determined in accordance with Section 2.5, and that tonnage shall be the tonnage applicable to the appropriate assigned Load Line for the trade in which the vessel is engaged.

2.7 CALCULATION OF VOLUMES

2.7.1 General

2.7.1.1 Measurements to calculate the tonnage of a vessel are to be taken from:

(a) the vessel; and

(b) the scrieve boards, comprising the full or reduced size of the vessel; or

(c) the lines plan and scale drawings of the vessel; or

(d) computer graphics of the vessel.

2.7.1.2 All volumes included in the calculation of gross tonnage and net tonnage are to be measured, irrespective of the fitting of insulation or the like, to the inner side of the shell or structural boundary plating in vessels constructed of metal, and to the outer surface of the shell and to the inner side of structural boundary surfaces in vessels constructed of any other material.

2.7.1.3 The volume components of gross tonnage are to consist of the sum of the following:

(a) the volume of the vessel below the upper deck measured in cubic metres; and

(b) the volume of each enclosed space above the upper deck measured in cubic metres.

2.7.2 Tonnage Volumes Below Upper Deck

2.7.2.1 The volumes to be measured include the following:

(a) the main body;

(b) overhangs beyond the upper deck length or breadth;

(c) bulbous or similar bows;

(d) skegs and keels;

(e) shaft bossings;

(f) sponsons added for improved buoyancy or stability; and

(g) all other permanent volumes except those not included.

2.7.3 Volumes Not to be Included in the Tonnage Calculation

2.7.3.1 The following volumes are not to be included in the tonnage calculation:

(a) propellers;

(b) rudders;

(c) mechanical stabilizers;

(d) echo sounders, bilge keels and other non-essential appendages; and

(e) spaces within the boundaries of the main volume that open directly to the sea such as bow or stern thruster tubes, moonpools, hawsepipes, sea valve recesses, stern chutes in fishing vessels, dredging wells in dredges, anchor pockets and sea chests within the boundaries of the main hull volume.

2.7.4 Despite the above, any space with a volume less than 1 cubic metre shall not be taken into account either for inclusion or deduction.

2.7.5 Volumes within the hulls of vessels, such as split-hull barges and dredgers, shall be retained in V and V_c despite the fact that the space within the hull is temporarily opened to the sea when discharging cargo (see Figure 2.22).

2.8 CALCULATION OF ENCLOSED SPACES BELOW THE UPPER DECK

2.8.1 Measurement

2.8.1.1 Measure the tonnage length in a straight line along the upper side of the upper deck from the moulded line of the hull at the stem to the moulded line of the hull at the stern (see Figure 2.21a).

2.8.1.2 In a vessel having a stepped upper deck, such as a break forward, a break amidships or a break aft, the lowest line of exposed deck and the continuation of that line parallel to the upper part of the deck are to be measured as described in the preceding paragraph (see Figure 2.21b).

Note: It is found that the tonnage length taken on the surface or sheer line of the deck, in vessels of standard sheer, is sufficiently accurate for the practical purpose of tonnage. In all cases of unusual sheer, such as trawlers, the length for calculation shall be taken by means of a tape or line stretched tightly from end to end of the deck.

2.8.2 Division of Tonnage Length

2.8.2.1 Divide the tonnage length determined in Section 2.8.1 into the number of equal parts specified in the following table:

Table 2 – Division of Tonnage Length

Tonnage length	Parts
Tonnage length less than 30 m	6 parts
Tonnage length 30 m or more but less than 45 m	8 parts
Tonnage length 45 m or more but less than 60 m	10 parts
Tonnage length 60 m or more but less than 75 m	12 parts
Tonnage length 75 m or more but less than 90 m	14 parts
Tonnage length 90 m or more but less than 105 m	16 parts
Tonnage length 105 m or more but less than 120 m	18 parts
Tonnage length 120 m and more	20 parts

2.8.2.2 Subdivide the two foremost and two aftermost parts into two equal parts.

2.8.2.3 As an example, a vessel with a tonnage length of 50 metres would be divided into 10 equal parts and the two foremost and aftermost parts would be further divided into two equal parts each making a total of 14 parts (15 sections) (see Figure 2.23).

2.8.3 Transverse Sections

2.8.3.1 Transverse sections are taken through the points of division determined in Section 2.8.2 and also through the extreme points of the tonnage length at right angles to the centre line, parallel to the vessel's main transverse bulkheads. These transverse sections are numbered from stem to stern, the terminal point at the fore end of the tonnage length being No. 1 (see Figure 2.23).

2.8.4 Depth Correction for Camber

2.8.4.1 The depth of each transverse section shall be corrected for camber as follows:

(a) by one third of the camber when the deck is rounded athwartships (parabolic curve) (see Figure 2.24);

(b) by one half of the camber when the deck rises in a straight line from the vessel's sides to the centre line (see Figure 2.25); and

(c) if the deck athwartship rises in a straight line from the vessel's sides and part of the deck is horizontal, the correction is to be calculated by the following formula (see Figure 2.26):

$$\text{Correction} = \frac{x\,(B - b)}{2B}$$

where
x = camber in metres;

B = the uppermost breadth of the transverse section; and

b = breadth of the horizontal part of the deck.

2.8.5 Depth of Transverse Section (DS)

2.8.5.1 Depth of transverse Section is measured as the vertical distance on the centre line between the upper and lower termini as described in subsections (a) and (b) below:

(a) upper terminus:

(i) if the upper deck has no break, the moulded line of the upper deck less correction for camber as determined in Section 2.8.4. (see Figure 2.27);

(ii) if there is a break in the upper deck, the molded line of the lowest part of exposed deck and the continuation of that line parallel to the upper part of the deck less correction for camber as determined in Section 2.8.4. (see Figure 2.29);

(iii) if the vessel does not meet the requirements for upper deck as defined in subsection 2.2.10, the athwartship line extending between the upper edges of the upper strakes /gunwales (see Figure 2.30).

(b) lower terminus:

(i) for vessels built of metal, the moulded line of the keel plate or, if a bar keel or duct/box keel is fitted, the point where the moulded line of the hull intersects the side of the keel (see Figure 2.27);

(ii) for wood or composite vessels, the lower edge of the keel rabbet (see Figure 2.27);

(iii) if the form at the lower part of the hull is of a hollow character as in a vessel built of glass reinforced plastic or if thick garboards are fitted, the point where the moulded line of the flat of the bottom continued inwards cuts the side of the keel (see Figure 2.27);

(iv) in situations where a lower terminus cannot be determined using paragraph (i), (ii) or (iii), the moulded line of the hull at the centre line (see Figure 2.28).

2.8.5.2 For a vessel with decks and tanks below the upper deck, the depth of the transverse section is taken at each level and the various deck and tank plate thicknesses are added.

2.8.6 Division of Depth of Transverse Section

2.8.6.1 The depth of each transverse section is to be divided into:

(a) five equal parts, where the depth at the middle of the tonnage length does not exceed 6 metres; or

(b) seven equal parts where the depth at the middle of the tonnage length exceeds 6 metres.

2.8.6.2 Then the lowest common interval is to be further divided into two equal parts (see Figure 2.31).

2.8.7 Breadths of Transverse Section

2.8.7.1 Breadths are to be measured through each point of division as determined in Section 2.8.6 and at the extreme points of the depth. The breadths will be numbered from above, the No. 1 breadth being taken at the upper point of the depth determined in Section 2.8.5 (see Figure 2.31).

2.8.7.2 In all vessels, the bottom breadth will have a value equal to or greater than zero. It will never have a negative value.

2.8.8 Calculation of Transverse Section

2.8.8.1 If the area of a transverse section of the under deck can be calculated by a direct method, such as depth and breadth, without loss of accuracy, such a method may be used. Otherwise, the area is calculated using Simpson's First Rule, as follows:

(a) the uppermost breadth (Breadth No.1) is multiplied by 1;

(b) the three last breadths starting with the bottom breadth are multiplied respectively by 0.5, 2 and 1.5;

(c) the other even numbered breadths are multiplied by 4, and the odd numbered breadths by 2; and

(d) the sum of these products is then multiplied by one third of the common interval between breadths. The product obtained is the area of the transverse section.

2.8.9 Calculation of Volume below Upper Deck

2.8.9.1 Once the areas of the transverse sections have been ascertained, the volume below the upper deck is calculated using Simpson’s First Rule, as follows:

(a) The area of the foremost transverse section is multiplied by 0.5 and the following four (counted towards the stern) are multiplied respectively by 2,1, 2 and 1.5;

(b) The areas of the five aftermost transverse ordinates starting at the aftermost section are multiplied respectively by 0.5, 2, 1, 2 and 1.5;

(c) The even numbered transverse ordinates are multiplied by 4 and the odd numbered by 2;

(d) The sum of these products is multiplied by one-third of the common interval between the transverse ordinates, and the product obtained is the volume of the space below the upper deck, after the included and excluded spaces detailed in Section 2.7.2 and 2.7.3 are taken into account;

2.8.9.2 In a vessel having a stepped upper deck such as breaks situated forward, aft, or amidships, the under deck volume is the sum of the volume below the upper deck and its line of continuation and the volume between the line of continuation and the deck above. For the method of calculating a break, refer to Section 2.9.4 (see Figure 2.32);

2.8.9.3 The main volume under the upper deck in vessels with a bulbous bow or similar shape bow is to be calculated assuming there is no bulbous bow or similar bow volume; i.e. normal vessel shape bow. Calculate the additional volume that is present due to the bulbous bow or similar shape bow and add as an appendage (see Figure 2.35 and Section 2.8.10.4 “Bulbous or similar bows”).

2.8.10 Additional Volumes of Enclosed Spaces below the Upper Deck

2.8.10.1 The volume of any appendage is measured separately from the main volume below the upper deck as described below.

2.8.10.2 **Overhangs beyond the Upper Deck Length.** Overhangs are to be measured by Simpson's First Rule. The length is to be divided into two equal parts (three sections) and five ordinates are to be taken at each section (see Figure 2.33). An equivalent method of measurement without loss of accuracy may be used.

2.8.10.3 **Overhanging Deck.**

(a) A closed in space beneath an overhanging deck supported by deck beams, brackets or by other means is measured by:

mean length x mean breadth x mean depth

(b) If the space beneath the overhanging deck is not enclosed because the bottom is open or the external side is open, it is to be ignored. If the space beneath the overhanging deck is not enclosed because the internal side is open, it is to be measured (see Figure 2.34).

2.8.10.4 **Bulbous and Similar Bows.** Such bows are measured by Simpson's First Rule. The length is divided into four equal parts (5 sections) and five ordinates are taken at each section (see Figure 2.35).

2.8.10.5 **Skegs and Keels.** Volume displacement type skegs and keels, whether separate from or open to the hull, are measured using Simpson's First Rule. The length of the space is divided into four equal parts (five sections) and three ordinates are taken at each section. An equivalent method of measurement, without loss of accuracy, may be used.

Note: Some of the measurements may have already been included in the measurement of the main volume below the upper deck (see Figure 2.36).

2.8.10.6 **Shaft Bossings.** Shaft Bossings are measured by Simpson's First Rule. The length is divided into four equal parts (five sections) and five ordinates are taken at each section (see Figure 2.37).

2.8.11 Excluded Volumes of Enclosed Spaces below the Upper Deck

2.8.11.1 **Tunnel Thruster Tubes.** The volume shall be determined by use of the formula:

$V = 0.7854 \times \text{diameter}^2 \times \text{breadth (mean)}$

or

$V = \pi \times \text{radius}^2 \times \text{breadth (mean)}$

An equivalent method of measurement without loss of accuracy may be used.

2.8.11.2 **Anchor Pockets, Sea Chests and Similar Spaces.** Any accurate method of measurement may be used.

2.9 CALCULATIONS OF THE VOLUME OF ENCLOSED SPACES ABOVE THE UPPER DECK

2.9.1 General

2.9.1.1 In accordance with Section 2.8.9.2, the volume of a “break” is to be included as part of the volume below the upper deck. However, for calculation purposes, "breaks" have been grouped in with enclosed spaces above the upper deck.

2.9.1.2 Spaces located within the boundaries of “permanent or movable awnings” are to be treated as excluded spaces.

2.9.1.3 The following are not included in the total volume of enclosed spaces, if they are completely inaccessible and above the upper deck and separated on all their sides from other enclosed spaces:

(a) masts, kingposts, cranes, crane and container support structures;

(b) air trunks having a cross-sectional area not exceeding 1 square metre;

(c) mobile cranes; and

(d) hatchways with volumes less than 1 cubic metre.

2.9.1.4 The space between the side longitudinal bulkhead of a deckhouse and the bulwark below a deck extending from side to side supported by stanchions or vertical plates connected to the bulwarks is treated as an “excluded space”.

2.9.1.5 In the case of a ro-ro ship, for example, if the space at the end of an erection is fitted with means for securing cargo, the space is included in volume (V) in accordance with the first condition contained in the definition “excluded spaces.”

2.9.2 Applying Simpson’s First Rule to Enclosed Spaces above the Upper Deck

2.9.2.1 Enclosed spaces above the upper deck, including breaks, are measured using Simpson’s First Rule. However due to the shape and location of these spaces, variations in the application of Simpson’s First Rule, as explained in the following paragraphs, must be observed.

2.9.2.2 In applying this rule, the breadths taken are numbered consecutively starting at the foremost point of the length. All lengths and breadths of enclosed spaces above the upper deck are measured, irrespective of the fitting of insulation or the like, to the inner side of the structural boundary plating in vessels constructed of metal and to the inner side of the structural boundary surfaces in vessels constructed of any other material (see Figure 2.38).

2.9.2.3 All heights for enclosed spaces are to be measured from the top of the deck plate to the underside of the overhead deck plate.

2.9.2.4 Box-shaped enclosed spaces shall be calculated by multiplying the three main dimensions together, i.e.,

mean length x mean breadth x mean height = V of enclosed space.

2.9.2.5 If spaces have an irregular shape and cannot be measured by the foregoing methods, they may be divided into parts, which may be calculated separately.

2.9.3 Between Deck Space

2.9.3.1 Measure the mean length of the space at the middle of its height and divide this length into the same number of parts determined for the tonnage length of the space below the upper deck.

2.9.3.2 Breadths taken at half the height of the space are measured through each point of division and also through the extreme points of the length.

2.9.3.3 The area is calculated using Simpson's First Rule, as follows:

(a) The breadth taken at the foremost point of the length is multiplied by 0.5. The following four breadths are multiplied respectively by 2, 1, 2 and 1.5. The breadths taken at the five aftermost points of division starting at the aftermost point of the length are multiplied respectively by 0.5, 2, 1, 2 and 1.5;

(b) The breadths taken at the even numbered points of division are multiplied by 4 and at the odd numbered points of division by 2;

2.9.3.4 The sum of the products determined above is multiplied by one-third the common interval between breadths, and the result obtained is multiplied by the mean height of the space to determine the volume of this space.

2.9.4 Break, Forecastle, Poop, Deck House, Side House, Trunk, Hatchway

2.9.4.1 Measure the mean length of the space at the middle of its height and divide the length into the following number of equal parts:

(a) length less than 15 metres – 4 equal parts;

(b) length 15 metres and above – 6 equal parts;

(c) in spaces such as a Break Forward and a Forecastle, the two foremost parts determined in accordance with (a) or (b) are each divided into two equal parts (see Figure 2.39);

(d) in spaces such as a Break Aft and a Poop, the two aftermost parts determined in accordance with (a) or (b) are each divided into two equal parts (see Figure 2.40).

Note: Division of parts determined in accordance with (a) or (b) does not apply to spaces such as Break Amidships, Deckhouse, Side House, Trunk and Hatch.

2.9.4.2 Breadths taken at half the height of the space are measured through each point of division and also through the extreme points of the length. The breadths are numbered consecutively starting with breadth No. 1 at the foremost point of the length.

2.9.4.3 The area is calculated using Simpson's First Rule, as follows:

(a) In spaces such as a Break Forward and a Forecastle:

(i) the breadth taken at the foremost point of the length is multiplied by 0.5 and the following four breadths are multiplied respectively by 2, 1, 2 and 1.5;

(ii) the breadth taken at the aftermost point of the length is multiplied by 1;

(iii) the even numbered breadths are multiplied by 4 and the odd numbered breadths by 2.

(b) In spaces such as a "Break Aft" and a "Poop,"

(i) the breadth taken at the foremost point of the length is multiplied by 1;

(ii) the breadths taken at the five aftermost points of division starting at the aftermost point of the length are multiplied respectively by 0.5, 2, 1, 2 and 1.5;

(iii) the even numbered breadths are multiplied by 4 and the odd numbered breadths by 2.

(c) In the case of a Break Amidships, a Deckhouse, a Sidehouse, a Trunk and a Hatch,

(i) the breadths at the foremost and aftermost points of the length are multiplied by 1;

(ii) the even numbered breadths are multiplied by 4 and the odd numbered breadths by 2.

2.9.4.4 The sum of the products determined in subparagraph 2.9.4.3 (a), (b) or (c) must be multiplied by one-third of the common interval between breadths and the result obtained is multiplied by the mean height of the space to determine its volume.

2.10 CALCULATION OF THE VOLUME OF CARGO SPACES

2.10.1 General

2.10.1.1 If any cargo space is of a shape that the volume may be calculated by a direct method without loss of accuracy, such a method may be used. Otherwise, it must be measured using Simpson's First Rule. Lengths, breadths, depths, and heights are to be measured irrespective of the fitting of insulation or the like, to the inner side of the boundary of the space.

2.10.1.2 For the purposes of measurement, "cargo space" can be taken as a longitudinal series of cargo holds or tanks, if they are not separated by machinery or accommodation spaces and do not have discontinuities.

2.10.2 Division of Length of Cargo Spaces Below the Upper Deck

2.10.2.1 The length of each cargo space [ℓ] taken in a straight line at the uppermost point of the depth of the space is divided into the following number of equal parts:

(a) length of cargo space less than 20 metres – 4 parts;

(b) length of cargo space 20 metres or more but not more than 40 metres – 6 parts;

(c) length of cargo space more than 40 metres – 10 parts.

2.10.3 Volume of Cargo Space Below Upper Deck (4 Parts)

2.10.3.1 A total of four (4) equally spaced parts [ℓ/4] using five (5) transverse ordinates is taken through the points of division specified in Section 2.10.2 which includes the two extreme enclosing bulkheads of the cargo space, in a similar manner as explained in Section 2.8.3. The transverse ordinates are numbered forward to aft with the terminal point at the forward bulkhead position being No. 1, and the aftermost bulkhead being No. 5. In addition, the foremost and aftermost parts are further divided into two equal parts making a total of seven (7) ordinates (see Figure 2.23 for an example of 10 parts, 15 ordinates).

2.10.3.2 The depth of each transverse section is divided as indicated in Section 2.8.6.

2.10.3.3 The breadths are measured as indicated in Section 2.8.7.

2.10.3.4 The area of the transverse sections is calculated in accordance with Section 2.8.8.

2.10.3.5 Once the areas of the transverse ordinates have been ascertained, the volume below the upper deck is calculated using Simpson's First Rule, as follows: the area of the foremost transverse section is multiplied by 0.5 and the following six sections (counted towards the stern) are multiplied respectively by 2, 1.5, 4, 1.5, 2 and 0.5.

2.10.3.6 The sum of the products determined in 2.10.3.5 is multiplied by one-third of the common interval (i.e. 1/3 x ℓ/4) between the transverse ordinates, and the product obtained is the volume of the cargo space below the upper deck.

2.10.4 Volume of Cargo Space Below Upper Deck (6 or 10 parts)

2.10.4.1 A total of six or ten equally spaced parts (ℓ/6 or ℓ/10) using seven or eleven transverse ordinates is taken through the points of division specified in Section 2.10.2 which includes the two extreme enclosing bulkheads of the cargo space, in a similar manner as explained in Section 2.8.3. The transverse ordinates are numbered forward to aft with the terminal point at the forward bulkhead position being No. 1, and the aftermost bulkhead being No. 7 (or 11). In addition, the two foremost and two aftermost parts are further divided into two equal parts making a total of 11 ordinates for a cargo space of 6 parts or 15 ordinates for a cargo space of 10 parts (See Figure 2.23 for an example of 10 parts, 15 ordinates).

2.10.4.2 The depth of each transverse section is divided as indicated in Section 2.8.6.

2.10.4.3 The breadths are measured as indicated in Section 2.8.7.

2.10.4.4 The area of the transverse sections is calculated in accordance with Section 2.8.8.

2.10.4.5 Once the areas of the transverse sections have been ascertained, the volume below the upper deck is calculated using Simpson's First Rule as follows: the area of the foremost transverse section is multiplied by 0.5 and the following four sections (counted towards the stern) are multiplied respectively by 2, 1, 2, 1.5; the areas of the five aftermost transverse sections are multiplied (starting at the aftermost section) respectively by 0.5, 2, 1, 2 and 1.5; the even numbered transverse sections are multiplied by 4 and the odd numbered by 2.

2.10.4.6 The sum of the products determined in clause 2.10.4.5 is multiplied by one third of the common interval [i.e.1/3 x ℓ/6 or ℓ/10] between the transverse ordinates, and the product obtained is the volume of the cargo space below the upper deck.

2.10.5 Cargo Spaces above the Upper Deck

2.10.5.1 If any cargo space is of such a shape that the volume can be calculated by a direct method without loss of accuracy, that method may be used. Otherwise the cargo space must be measured using Simpson's First Rule.

2.10.6 Interpretations of Compartment Volumes for Cargo Spaces

2.10.6.1 The volumes of segregated ballast tanks are not to be included in cargo volume (V_c) provided they are not to be used for cargo.

2.10.6.2 The volumes of clean ballast tanks in oil tankers are included in V_c if the vessel is fitted with a crude oil washing system which would permit dual purpose cargo/clean ballast tank use of these tanks.

2.10.6.3 The volumes of dedicated clean ballast tanks are not to be included in V_c provided that:

(a) the tanks are not used for cargo;

(b) the vessel carries a single International Oil Pollution Prevention Certificate which indicates it is operating with dedicated clean ballast tanks in accordance with regulation 13A, Annex I, MARPOL.

2.10.6.4 Tanks, permanently located on the upper deck, provided with removable pipe connections to the cargo system or the vent (de-airing) lines of the vessel, are to be included in V_c;

2.10.6.5 The volume of weathertight steel pontoon covers on hatchway coamings are included in the calculations of the total volume (V) of the vessel. If covers are open on the underside, their volume is also included in V_c;

2.10.6.6 Multipurpose vessels that have the facility to trade with cargo hatches open or closed are always measured with the hatch covers considered to be closed;

2.10.6.7 The volumes of slop tanks for cargo residues are included in V_c;

2.10.6.8 In fishing vessels, the volumes of fish processing space for fishmeal, liver oil and canning, tanks for re-cooling fish, wet fish bunkers, stores for salt, spices, oil and tare are included in V_c. Fishing gear stores are not included in V_c;

2.10.6.9 The volume of refrigerating machinery used for refrigerating cargoes and situated within the boundaries of the cargo spaces is included in V_c;

2.10.6.10 The volumes of mail rooms, baggage compartments separate from passenger accommodation, and bonded stores for passengers are included in V_c. The volume of provision rooms for crew or passengers and bonded stores for crew are not included in V_c;

2.10.6.11 Dual purpose oil/ballast tanks on combination carriers that have been converted to ballast tanks are to be excluded from V_c if they are solely allocated to carry ballast, permanently disconnected from the oil cargo system and connected to an independent ballast system and not used for the carriage of cargo;

2.10.6.12 When determining the volumes of cargo spaces, no account shall be taken of insulation, sparring or ceiling that is fitted within the boundaries of the space concerned. For vessels that have permanent independent cargo tanks constructed within the vessel, e.g. gas tankers, the volume to be included in V_c is calculated to the structural boundary of such tanks, irrespective of insulation which may be fitted on the inside or outside of the tank boundary;

2.10.6.13 The volumes of dual-purpose spaces such as those used for both ballast and cargo are included in V_c;

2.10.6.14 Spaces allocated to passenger automobiles are included in V_c.

PART 3 TONNAGE MEASUREMENT OF VESSELS LESS THAN 24 METRES IN LENGTH

3.1 GENERAL

3.1.1 Tonnage measurement of a vessel that is less than 24 metres in length (L)* shall be carried out in accordance with the provisions of this part.

3.2 DEFINITIONS

The following definitions apply in this Part:

3.2.1 **Vessel having a Barge Hull Form** is a vessel the hull of which approximates rectangular box shape.

3.2.2 **Break** is the space bounded longitudinally by a step in the upper deck and another such step or the end of the vessel, transversely by the sides of the vessel and vertically by the lowest line of the upper deck and higher part thereof (see figures 3.1(b) and 3.6);

3.2.3 **Gross Tonnage Coefficient (GTC)**

In case of a vessel designed for sailing GTC = 0.08

In case of a vessel not designed for sailing GTC = 0.16

In case of a vessel having a barge hull form GTC = 0.20

3.2.4 **Net Tonnage Coefficient (NTC)**

In case of a sailing vessel (including vessels equipped with an auxiliary propulsion engine) NTC = 0.95

In case of a power-driven vessel NTC = 0.75

In case of a non-propelled vessel NTC = 1.00

3.2.5 **Step** is the longitudinal discontinuity in the upper deck that extends over the full breadth of the vessel (see figures 3.1 (b) and 3.6);

3.2.6 **Tonnage Measurement Breadth (TMB)** is the maximum breadth of a vessel measured horizontally at the middle of the Tonnage Measurement Length (TML) from the outside of outer planking or plating on one side of the hull to the outside of outer planking or plating on the other side excluding any fenders or rubbing strakes (see figures 3.1 (a) and (b) and 3.2).

3.2.7 **Tonnage Measurement Depth (TMD)**

3.2.7.1 Tonnage Measurement Depth (TMD) is the depth of a vessel measured at the middle of the Tonnage Measurement Length (TML) from the top edge of the upper deck at the side of the vessel to the bottom of the keel (see figures 3.1 (b); 3.3 and 3.4).

3.2.7.2 If a vessel has a stepped upper deck, the height of break shall not be included in TMD: TMD shall be measured from the projected line corresponding to the top edge of the upper deck at the side of the vessel.

3.2.7.3 If a vessel does not meet the requirements for upper deck as defined in subsection 3.2.9, TMD of the vessel shall be measured from the line drawn through the top of the upper strake or gunwale/bulwark (see figure 3.1 (a)).

3.2.8 **Tonnage Measurement Length (TML)** is the length of a vessel measured horizontally (parallel to the designed waterline) from the fore side of the foremost fixed permanent structure to the aft side

---

* Length of a vessel (L) as defined in section 1 of the *Vessel Registration and Tonnage Regulations* (see also section 1.1 of this Standard).

of the aftermost fixed permanent structure excluding appendages that do not contribute to the volume of the vessel (see figures 3.1 (a) and (b)).

3.2.9 **Upper Deck** is the uppermost complete deck exposed to weather and sea, which is situated above the vessel's designed waterline, has permanent means of weathertight closing of all openings in the weather part thereof, and below which all openings in the sides of the vessel are fitted with permanent means of watertight closing; in the case of a vessel that has a stepped upper deck, the lowest line of the exposed deck and the continuation of that line parallel to the upper part of the deck is taken as the upper deck (see figures 3.1 (b) and 3.6);

3.3 UNITS OF MEASUREMENT AND DEGREE OF ACCURACY

3.3.1 All measurements are to be taken in metres to the nearest centimeter. Calculations are to be carried out to two decimal places, the second figure to be increased by one if the third is 5 or more.

3.4 MEASUREMENT OF VESSELS

3.4.1 Subject to subsection 3.4.2, all vessels are to be measured and their tonnage determined by an appointed tonnage measurer.

3.4.2 Monohull vessels of 15 m in TML or less having not more than a single tier of deckhouses and/or superstructures (including breaks that, for this purpose, are also being regarded as spaces equivalent to one tier of superstructures) whose total combined length does not exceed 70% of TML may be measured and have their tonnage determined under this Part by their owners (see figure 3.5).

3.4.3 All measurements may be taken from plans but sufficient check measurements must always be taken at the vessel to ensure accuracy.

3.5 GROSS TONNAGE

3.5.1 The Gross Tonnage (GT) of a vessel is the sum of the tonnage of the hull and the tonnage of spaces situated above the upper deck (if applicable).

3.5.2 Tonnage of Hull

3.5.2.1 The tonnage of the hull shall be determined by the formula:

Tonnage of Hull = TML x TMB x TMD x GTC

Where:

TML – Tonnage Measurement Length (as defined in subsection 3.2.8).

TMB – Tonnage Measurement Breadth (as defined in subsection 3.2.6).

TMD – Tonnage Measurement Depth (as defined in subsection 3.2.7).

GTC – Gross Tonnage Coefficient (as defined in subsection 3.2.3).

3.5.2.2 In case of a multi-hull vessel "tonnage of the hull" consists of the tonnages calculated for each hull in accordance with subsection 3.5.2.1 and also the tonnages of each enclosed bridge structure connecting the hulls and situated below the upper deck (if any). Tonnage of an enclosed bridge structure shall be calculated in accordance with subsection 3.5.3.1 except that the measurements shall be taken to the inner side of structural boundary surfaces.

3.5.3 Tonnage of spaces situated above the upper deck

3.5.3.1 Subject to subsection 3.5.3.2 tonnage of all enclosed spaces situated above the upper deck shall be determined by the formula:

Tonnage of a space = ML x MB x MH / 2.83

Where:

ML – Mean Length of a space;

MB – Mean Breadth of a space;

MH – Mean Height of a space.

(a) Enclosed spaces are defined in s.1.2.1.

(b) The measurement of all spaces shall be taken to the outside of shell of the hull or to the outside of structural boundary surfaces.

(c) If a space has a complex shape it shall be divided into parts that are treated as separate spaces.

(d) If upper deck has a side-to-side break the break is regarded as a "space situated above the upper deck" (see also definitions for upper deck and break in section 3.2).

3.5.3.2 Subsection 3.5.3.1 is not applicable to monohull vessels of 15 m in TML or less having not more than a single tier of deckhouses and/or superstructures (including breaks that, for this purpose, are also being regarded as spaces equivalent to one tier of superstructures) whose total combined length does not exceed 70% of TML (see figure 3.5).

3.5.3.3 Excluded spaces above the upper deck. An owner may elect to have the following spaces excluded from the tonnage of spaces situated above the upper deck:

(a) Those excluded spaces as set out in s. 1.2.2.

(b) Propelling Machinery Spaces. Spaces forming part of the propelling machinery space or serving for the admission of light and air thereto.

(c) Machinery Spaces. Spaces containing machinery such as anchor gear, steering gear, pumps, refrigerating machinery (not for cargo), etc. However, spaces containing machinery used in the handling of cargo, dredging operations and the such, shall be included in the tonnage of spaces situated above the upper deck.

(d) Wheelhouse. Only navigational spaces of wheelhouses may be excluded from the tonnage of spaces situated above the upper deck. If a wheelhouse is solely comprised of navigational spaces, then 100% of the volume of the wheelhouse may be excluded. If a wheelhouse is comprised of both navigational spaces and any other spaces then only 50% of the volume of the wheelhouse may be excluded.

(e) Chain lockers.

(f) Companions. Companionways and access hatches which protect stairways and ladderways leading to compartments situated below, also openings over such stairways and elevator shafts and related machinery.

(g) Shelter Spaces. Shelter space on small passenger vessels 10 metres in length (LOA) or less providing weather protection only for use free of charge in ships may be excluded from the tonnage of spaces situated above the upper deck provided that:

(i) the space is used solely for the shelter of unberthed passengers;

(ii) no form of service of meals or refreshments is provided in the space;

(iii) seating for deck passengers is not in the form of upholstered armchairs or settees;

(iv) tables are not normally permitted. The occasional table may be provided; and

(v) no carpets are to be provided.

3.6 NET TONNAGE

3.6.1 The Net Tonnage (NT) of a vessel shall be determined by the formula:

NT = GT x NTC

Where:

GT – Gross Tonnage determined in accordance with section 3.5.

NTC – Net Tonnage Coefficient (as defined in subsection 3.2.4).

PART 4 FIGURES

Figure 1.1 – Length ***(section 1.1)***

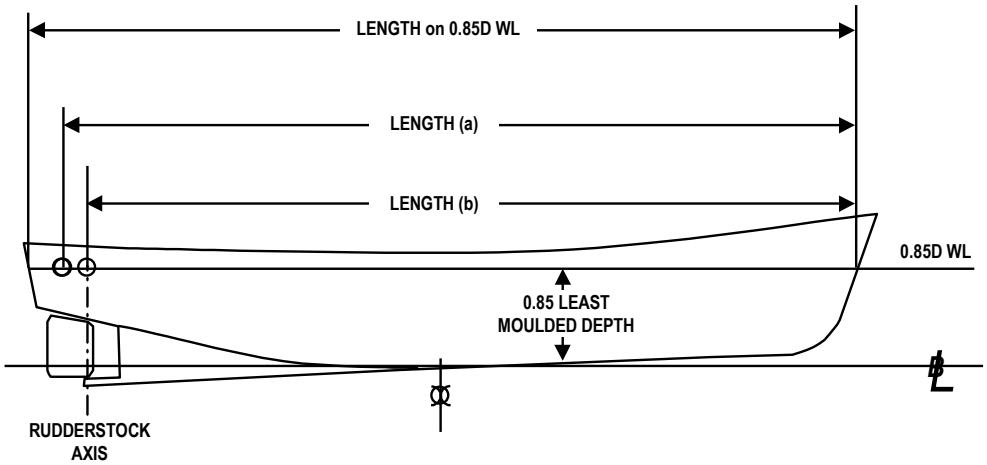

Figure 2.1 – Breadth ***(subsection 2.2.2)***

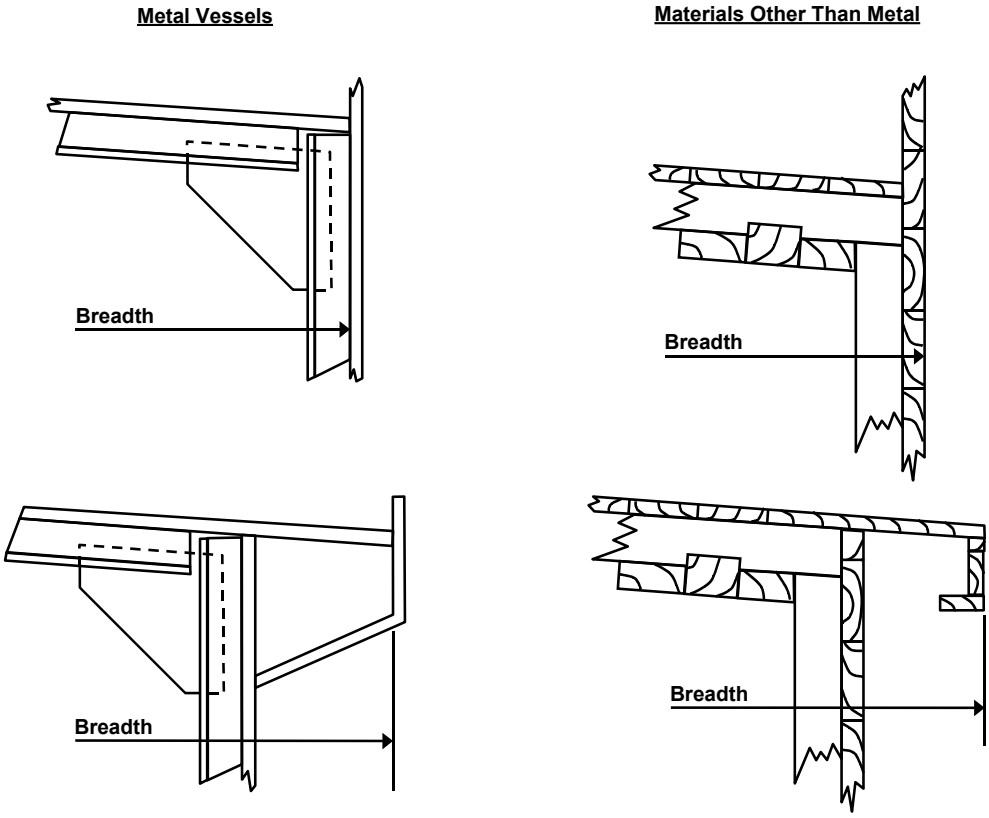

Figure 2.2 – Camber ***(subsection 2.2.3)***

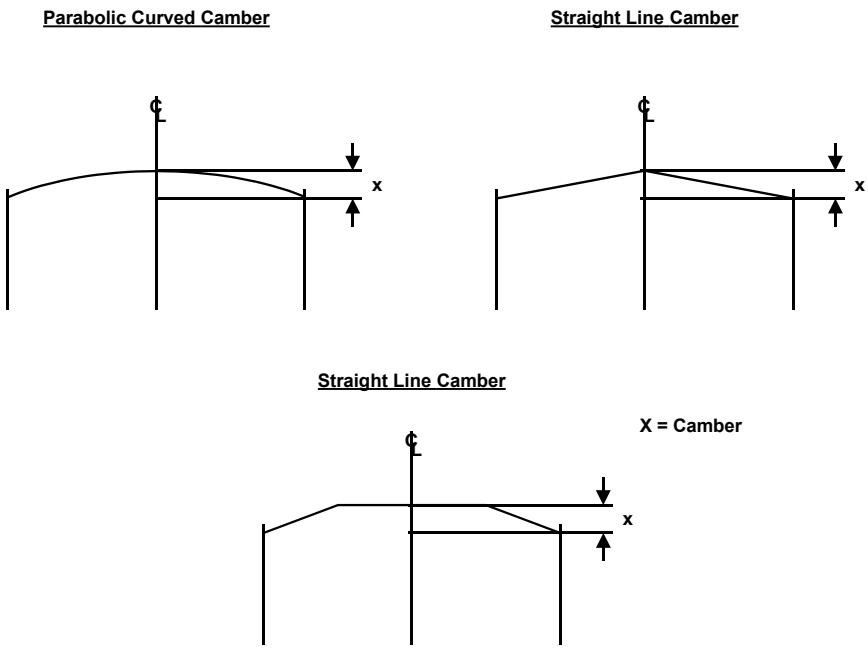

Figure 2.3 – Enclosed & Excluded Spaces ***(subsection 1.2.2.1(a)(i))***

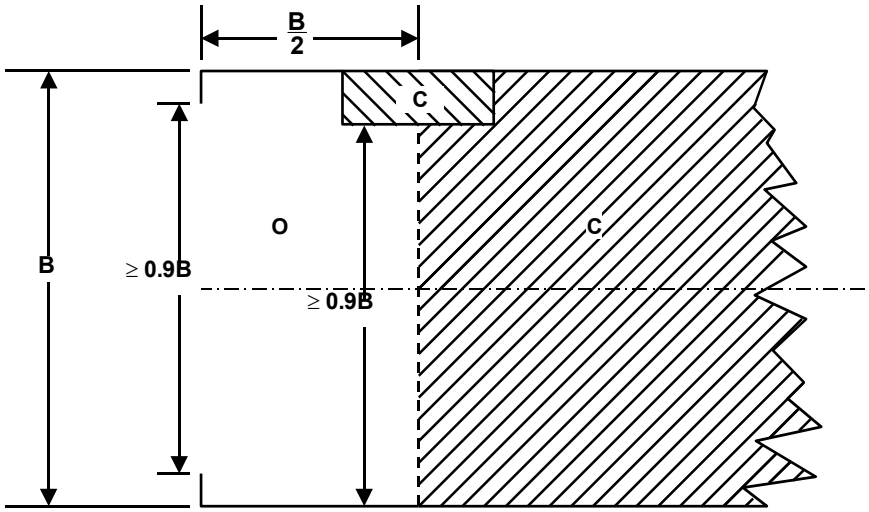

O = Excluded Space

C = Enclosed Space

B = Breadth of Deck in Way of Opening

Figure 2.4 – Enclosed & Excluded Spaces ***(subsection 1.2.2.1 (a)(ii))***

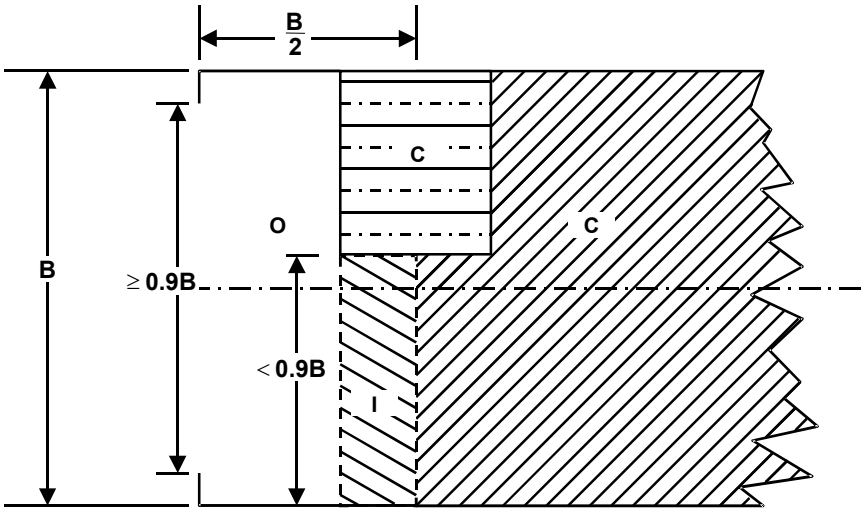

O = Excluded Space
C = Enclosed Space
B = Breadth of Deck in Way of Opening
I = Space to be Considered as an Enclosed Space

Figure 2.5 – Enclosed & Excluded Spaces ***(subsection 1.2.2.1 (a)(ii))***

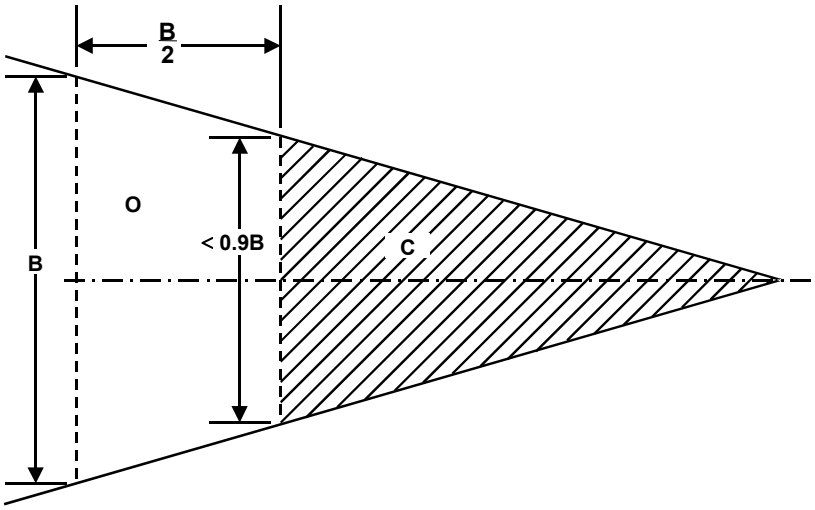

O = Excluded Space
C = Enclosed Space
B = Breadth of Deck in Way of Opening

Figure 2.6 – Enclosed & Excluded Spaces ***(subsection 1.2.2.1(a)(ii))***

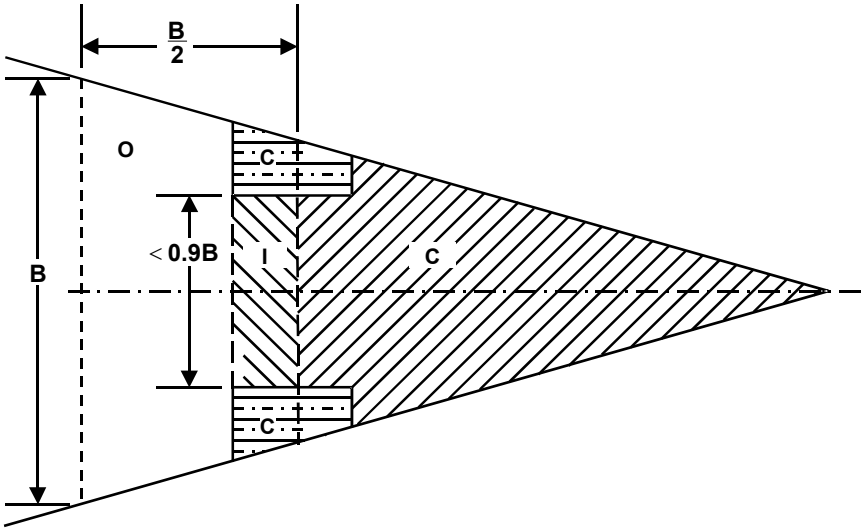

O = Excluded Space
C = Enclosed Space
B = Breadth of Deck in Way of Opening
I = Space to be Considered as an Enclosed Space

Figure 2.7 – Enclosed & Excluded Spaces ***(subsection 1.2.2.1(a)(iii))***

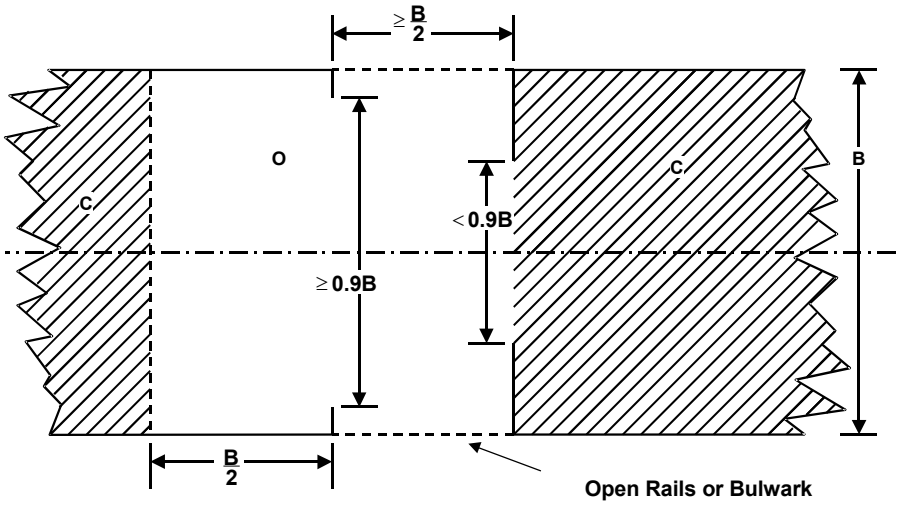

O = Excluded Space
C = Enclosed Space
B = Least Breadth of Deck in Way of Separation

Figure 2.8 – Enclosed & Excluded Spaces ***(subsection 1.2.2.1(a)(iii))***

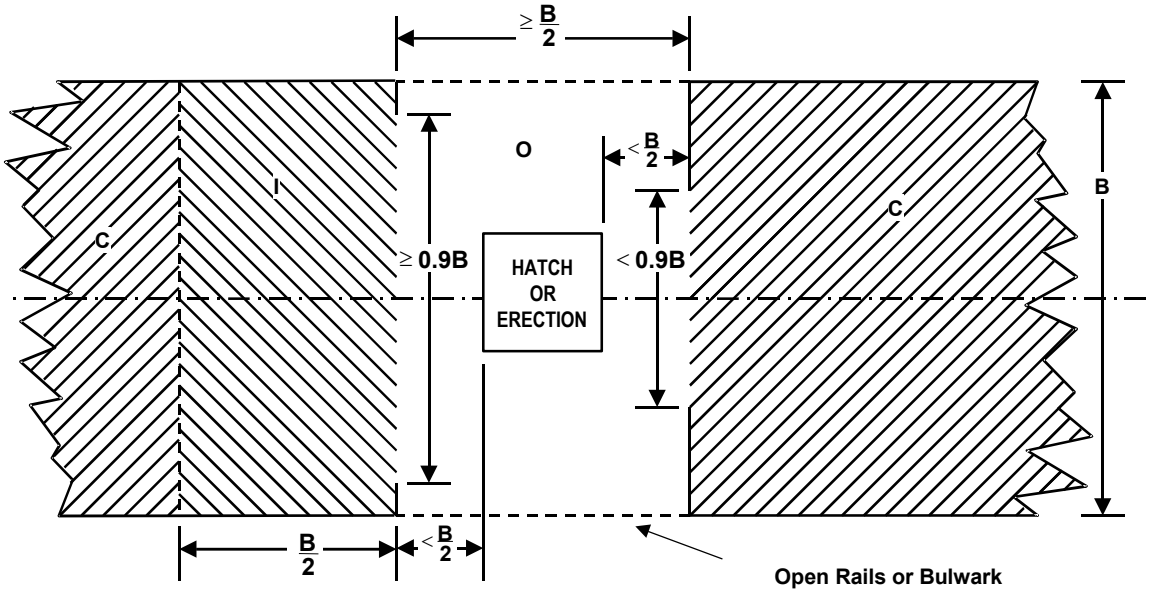

O = Excluded Space

C = Enclosed Space

B = Least Breadth of Deck in Way of Separation

I = Space to be Considered as an Enclosed Space

Figure 2.9 – Enclosed & Excluded Spaces ***(subsection 1.2.2.1(b))***

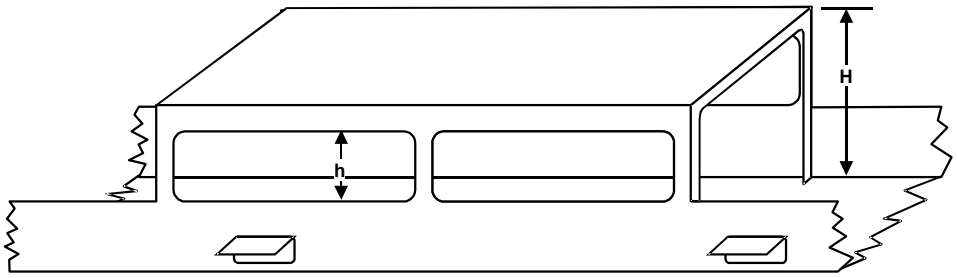

h = At Least $\frac{H}{3}$ or 0.75 m
which ever is the greater

Figure 2.10 – Enclosed & Excluded Spaces ***(subsection 1.2.2.1(c))***

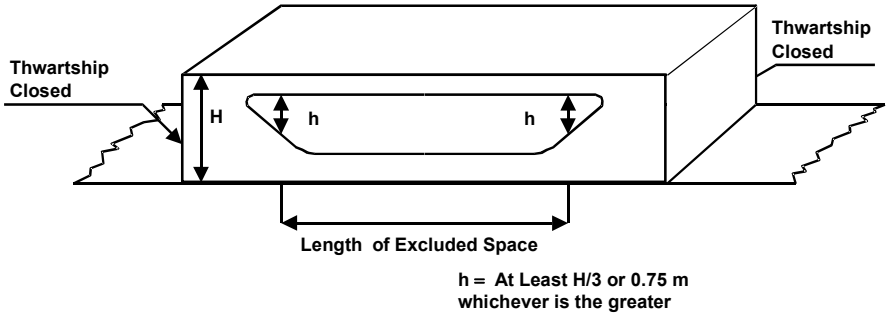

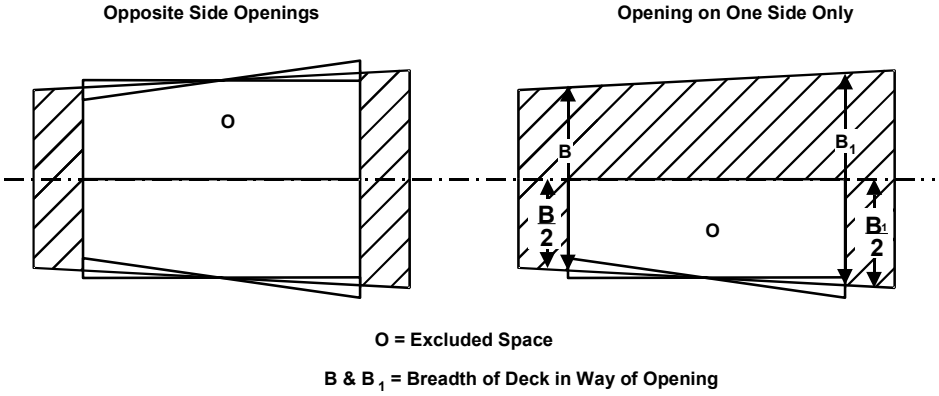

Figure 2.11 – Enclosed & Excluded Spaces ***(subsection 1.2.2.1(e))***

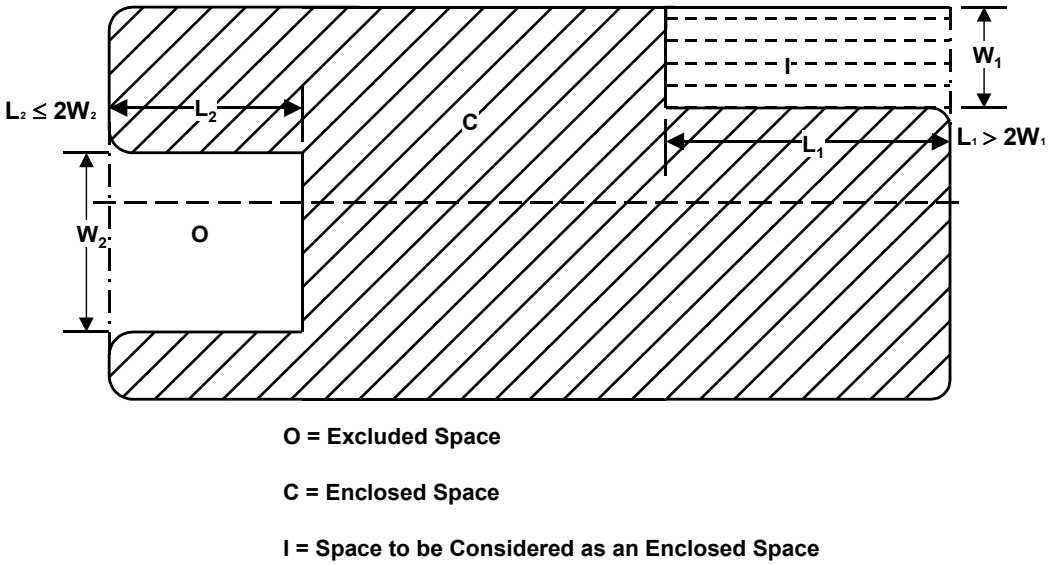

Figure 2.12 – Breadth of Deck in Way of Opening (for vessels with rounded gunwales) ***(subsection 1.2.2.4)***

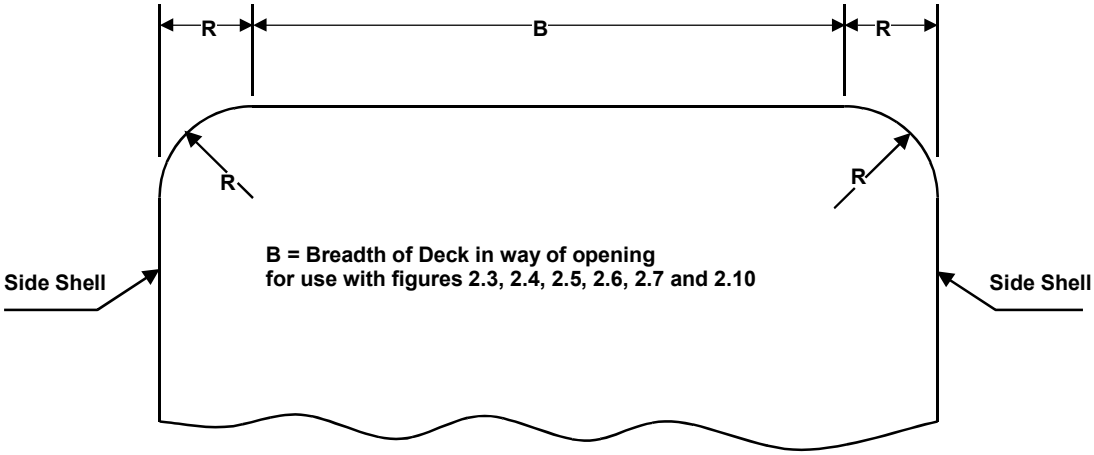

Figure 2.13 – Enclosed & Excluded Spaces ***(subsection 1.2.2.1(d))***

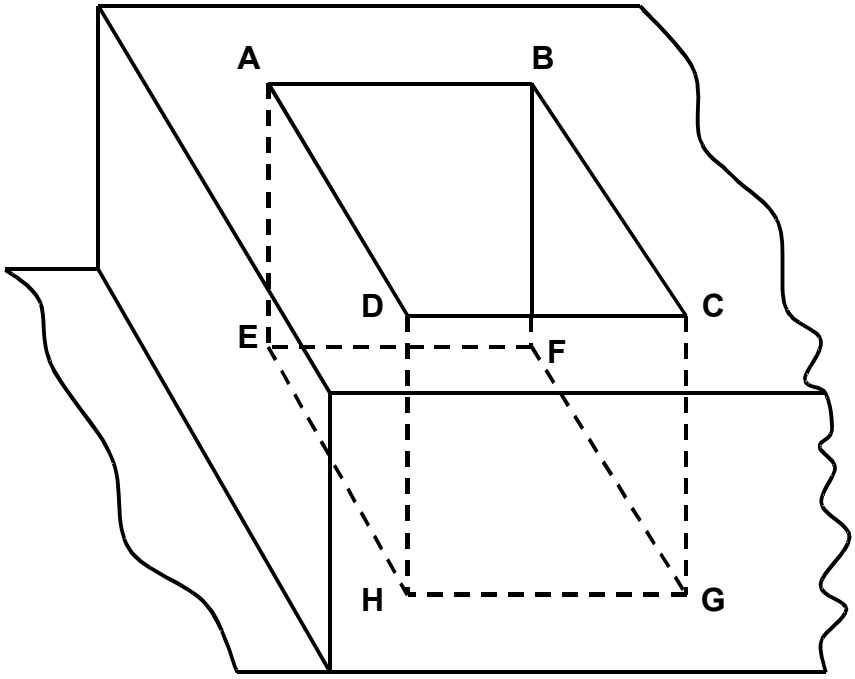

ABCD = Opening in the Deck

Space ABCDEFGH shall be excluded from enclosed space

Figure 2.14 – Enclosed & Excluded Spaces ***(subsection 1.2.2.3)***

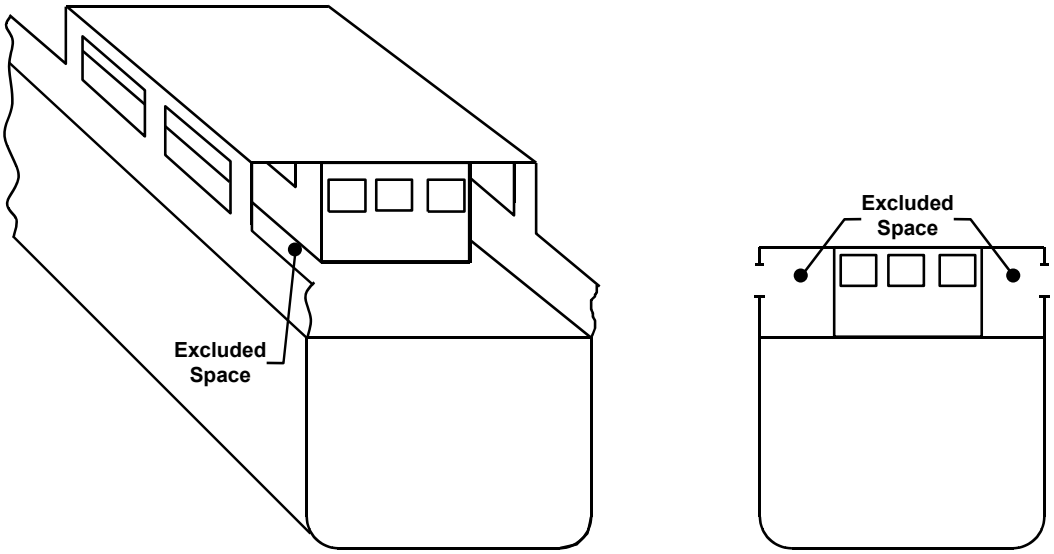

Figure 2.15 – Moulded Depth ***(subsection 2.2.5(a) to (d))***

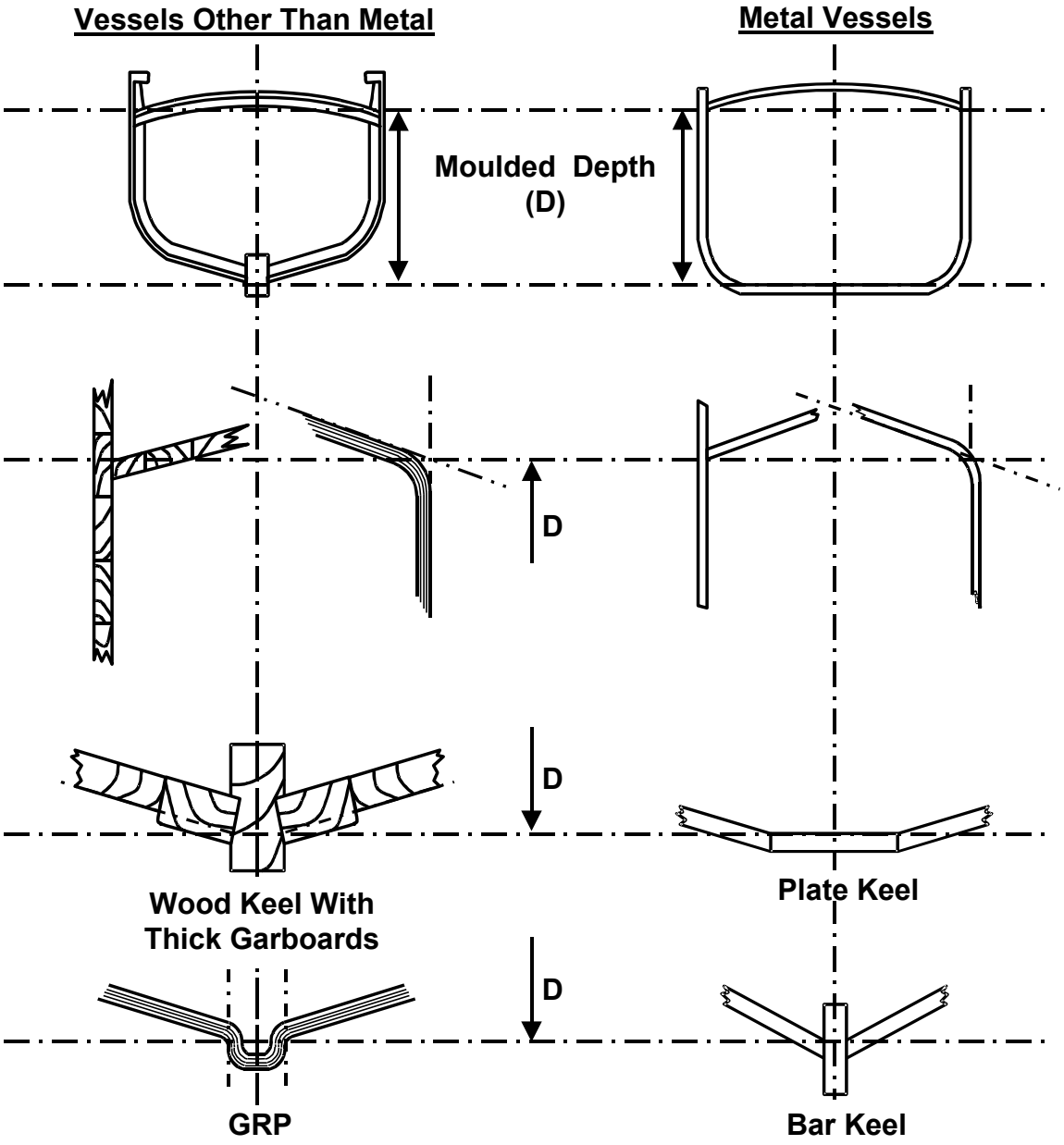

Figure 2.16 – Upper Deck ***(subsection 2.2.10(a) and (b))***

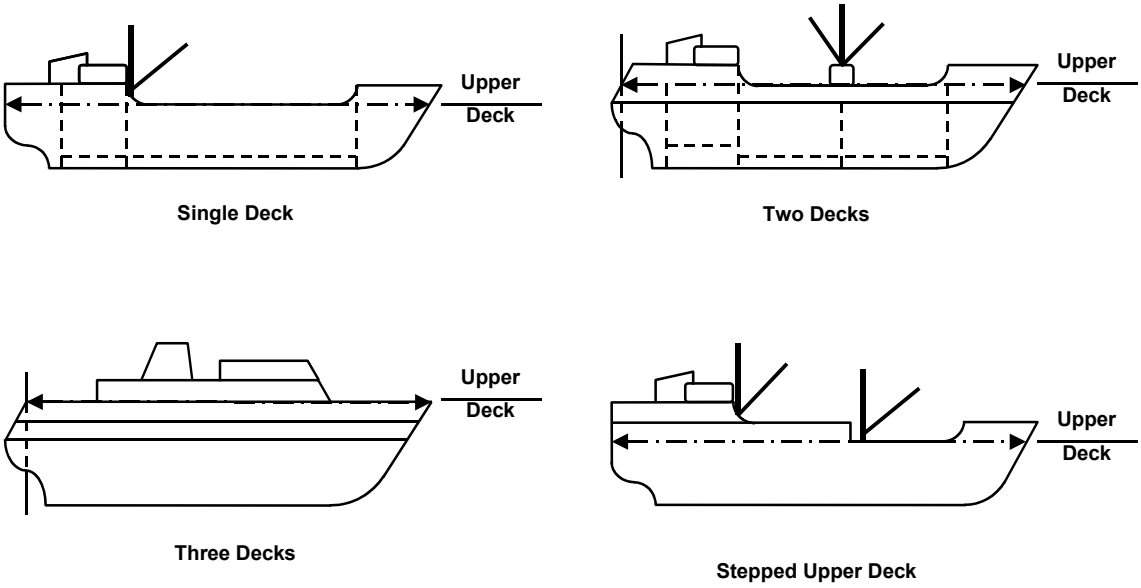

Figure 2.17 – Stepped Upper Deck (subsection 2.2.5(e) and 2.2.10(b))

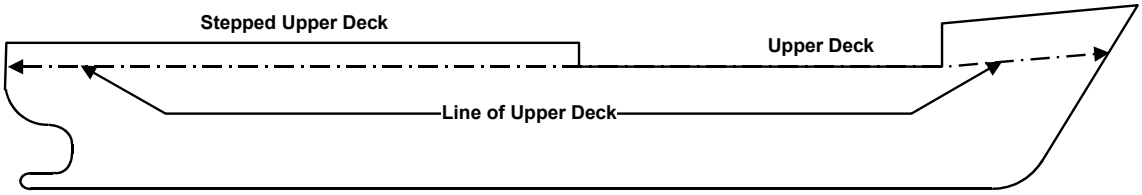

Figure 2.18 – Stepped Upper Deck ***(subsection 2.2.10.1)***

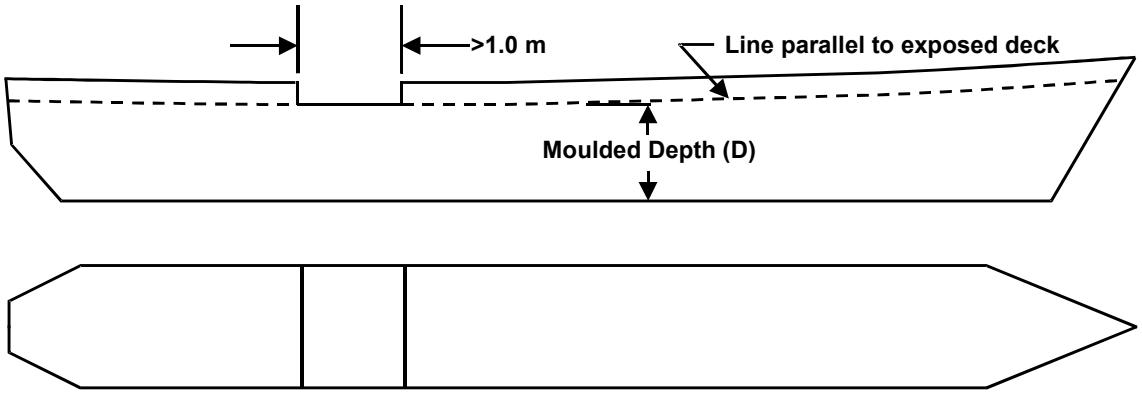

Figure 2.19 – Recessed Upper Deck ***(subsection 2.2.10.3)***

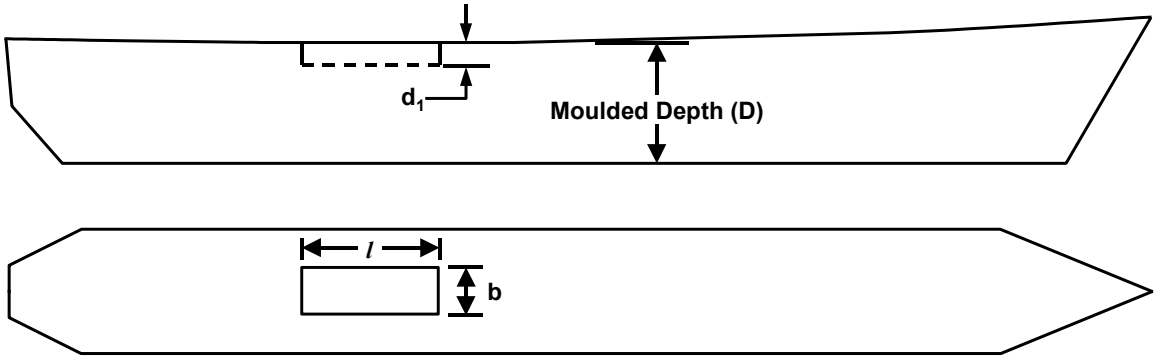

Figure 2.20 – Upper Deck ***(subsection 2.2.10.4)***

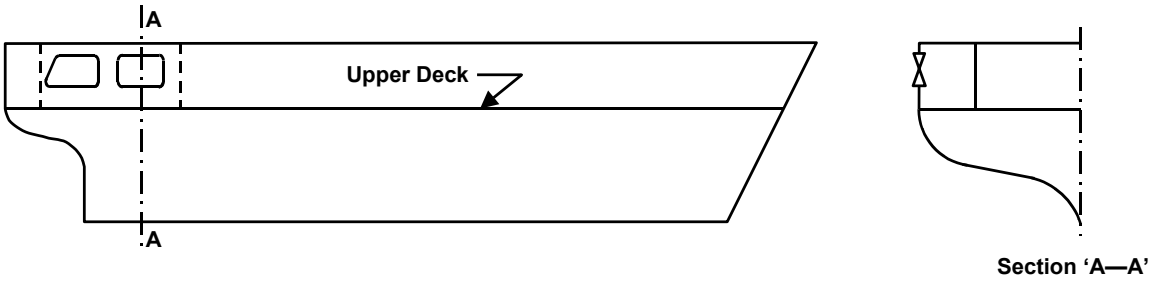

Figure 2.21a – Tonnage Length ***(subsection 2.2.9)***

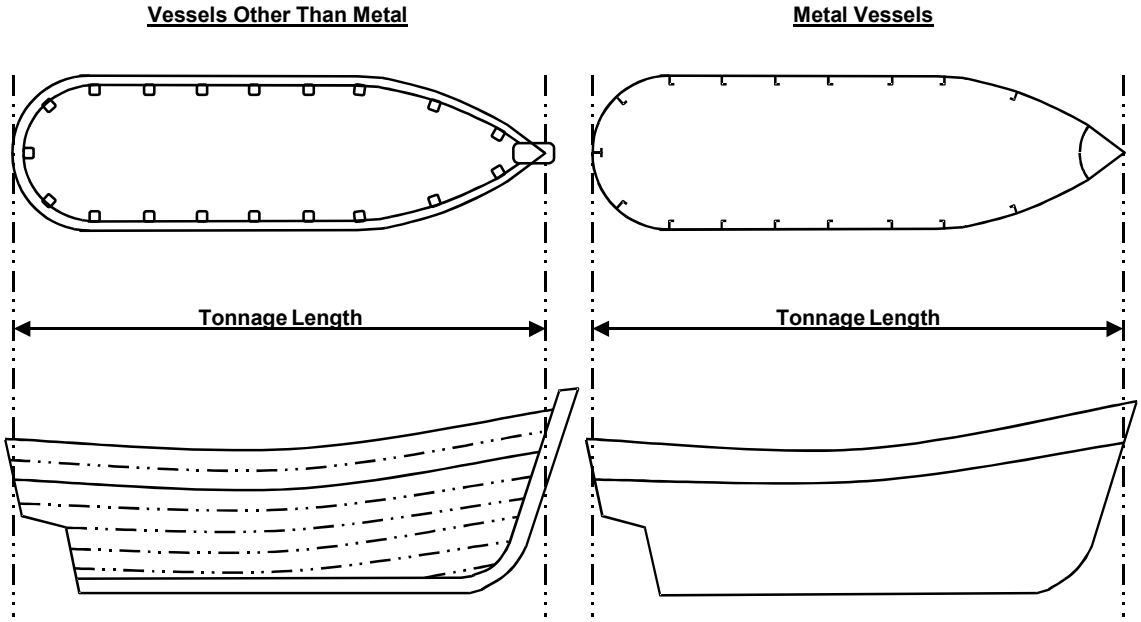

Figure 2.21b –Tonnage Length ***(subsection 2.2.9)***

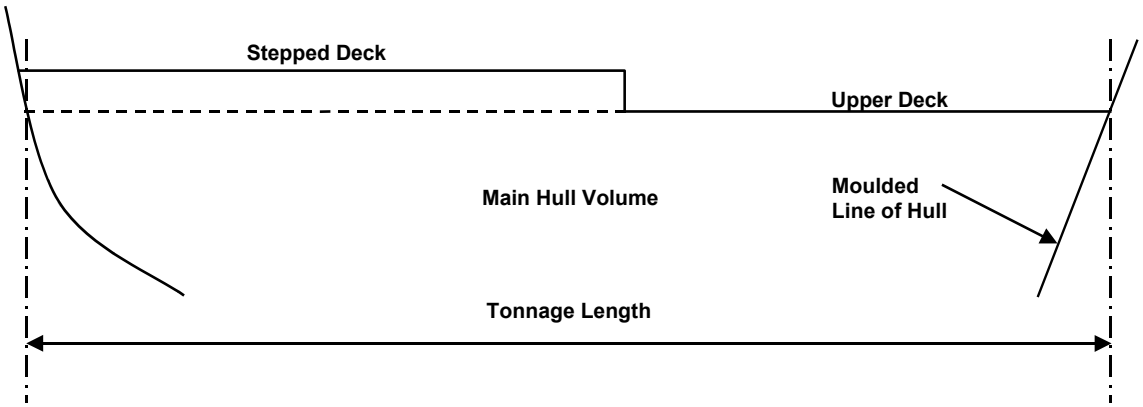

Figure 2.22 – Split Hull Barges and Dredges ***(subsection 2.7.5)***

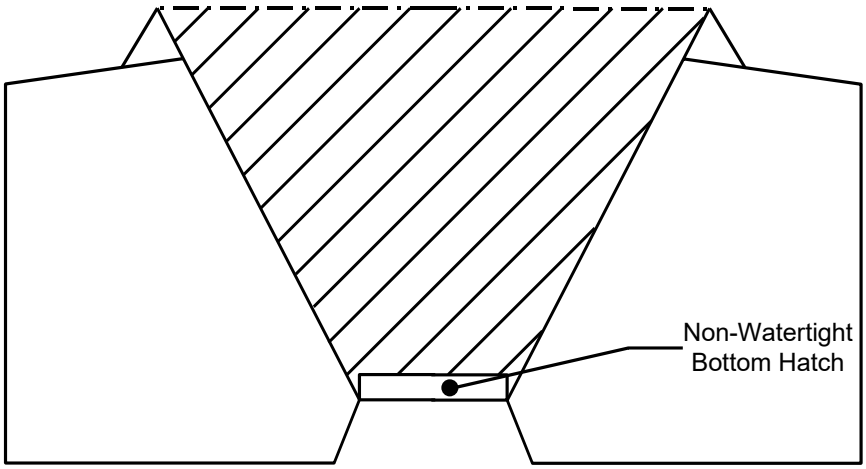

Shaded volumes include in V and V_c

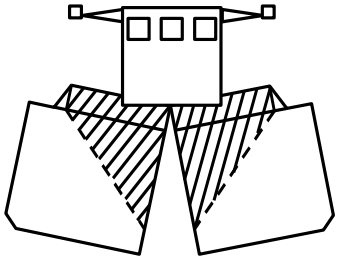

Figure 2.23 – Division of Tonnage Length (*subsection 2.8.2.3*)

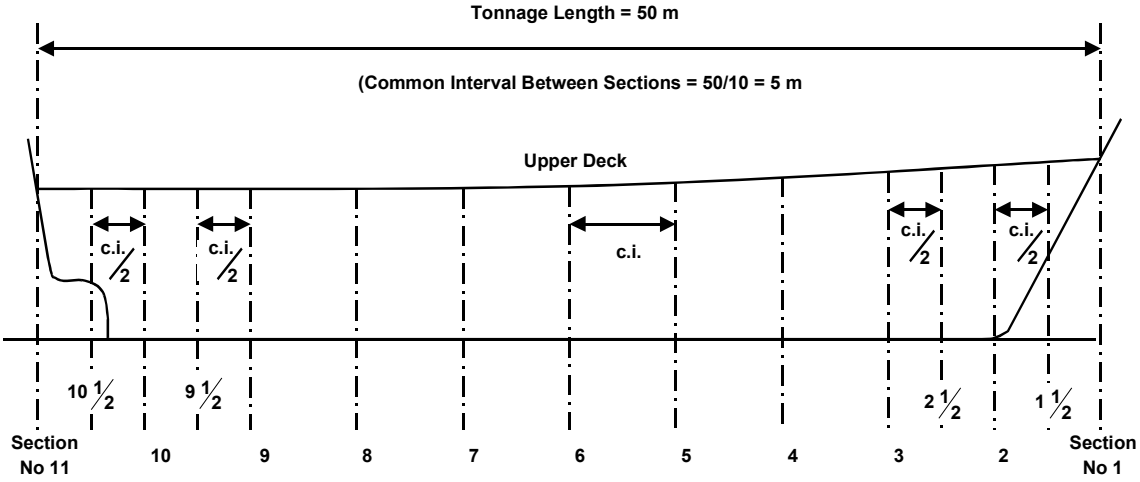

Figure 2.24 – Parabolic Curved Camber
(subsection 2.8.4.1(a))

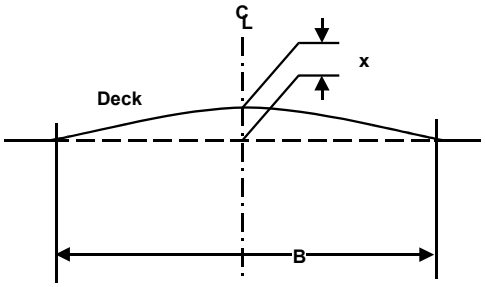

x = Camber in meters

$\frac{x}{3}$ = Correction for Camber

Figure 2.25 – Straight Line Camber
(subsection 2.8.4.1(b))

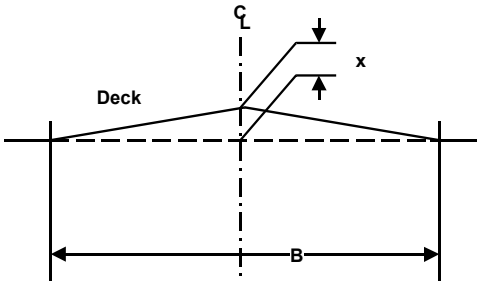

x = Camber in meters

$\frac{x}{2}$ = Correction for Camber

Figure 2.26 – Straight Line Camber *(subsection 2.8.4.1(c))*

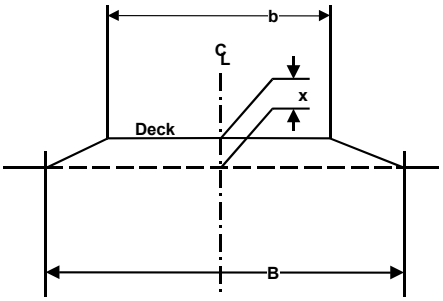

x = Camber in meters

$x\left(\frac{B-b}{2B}\right)$ = Correction for Camber

Figure 2.27 – Depth of Transverse Section*(subsections 2.8.5.1(a)(i), and 2.8.5.1(b)(i) to (iii))*

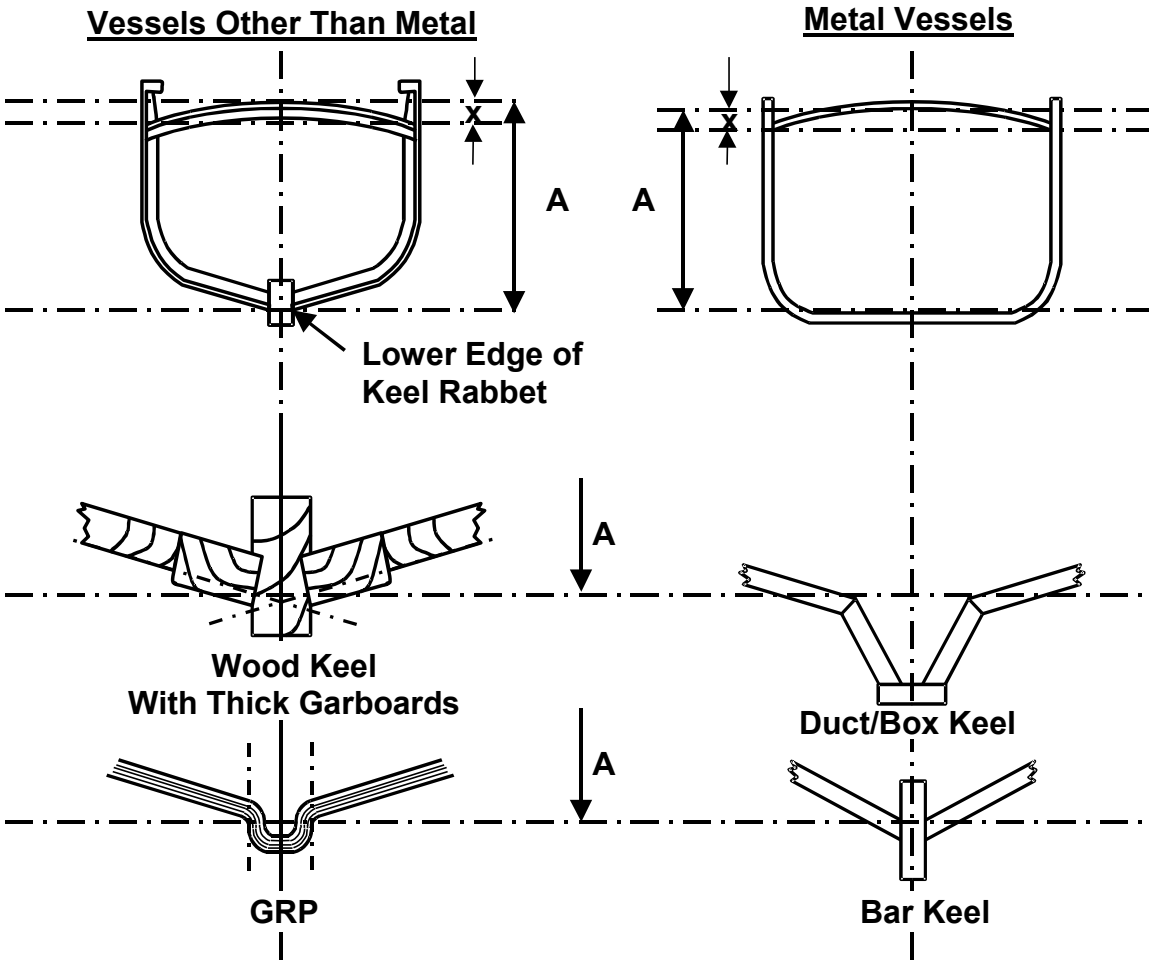

x = Camber
A = Depth of Section Before Camber Correction
Depth of Transverse Section (DS) = A - Correction for Camber

Figure 2.28 – Depth of Transverse Section ***(subsection 2.8.5.1(b)(iv))***

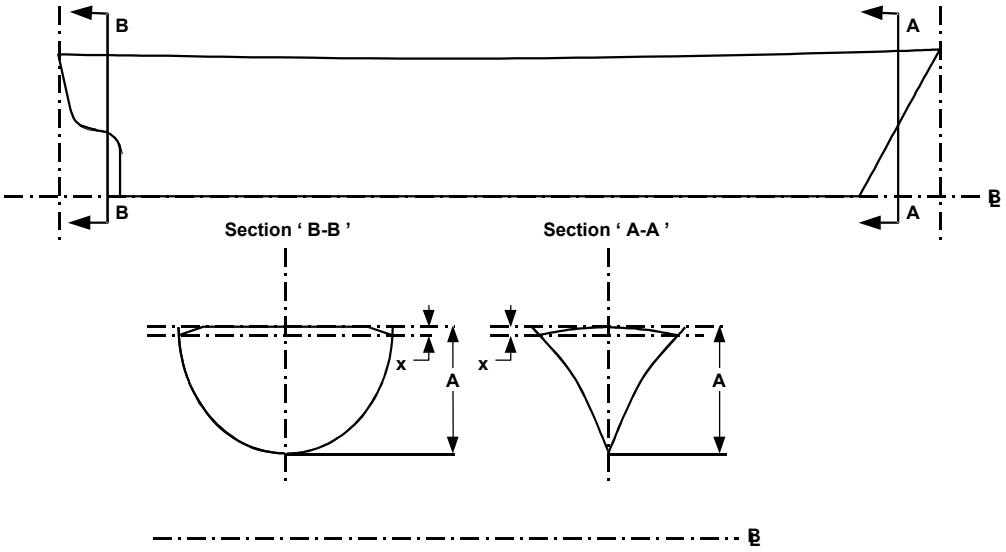

x = Camber
A = Depth of Section Before Camber Correction

Depth of Transverse Section (DS) = A - Correction For Camber

Figure 2.29 – Depth of Transverse Section ***(subsection 2.8.5.1(a)(ii))***

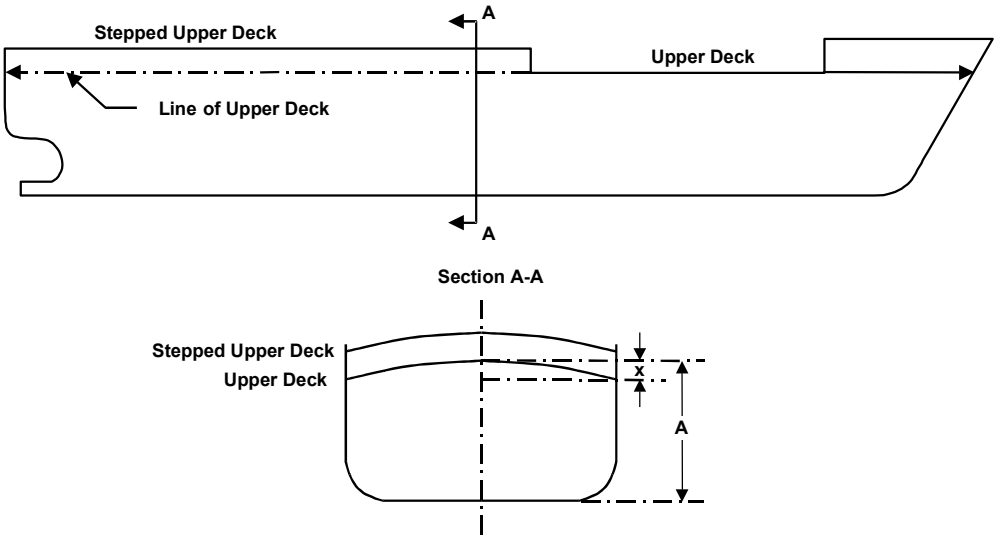

x = Camber
A = Depth of Section Before Camber Correction

Depth of Transverse Section (DS) = A - Correction For Camber

Figure 2.30 – Depth of Transverse Section ***(subsection 2.8.5.1.(a)(iii))***

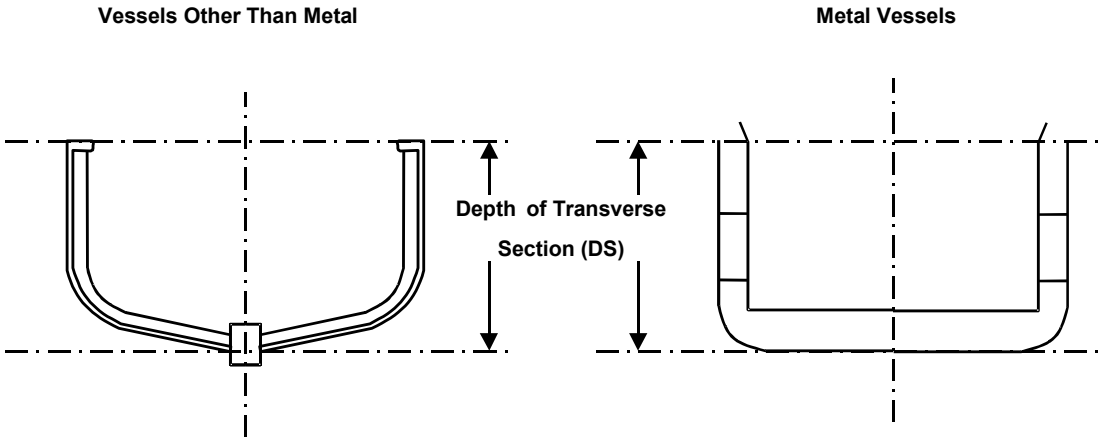

Figure 2.31 – Division of Depth of Transverse Section***(subsections 2.8.6.2 and 2.8.7.1)***

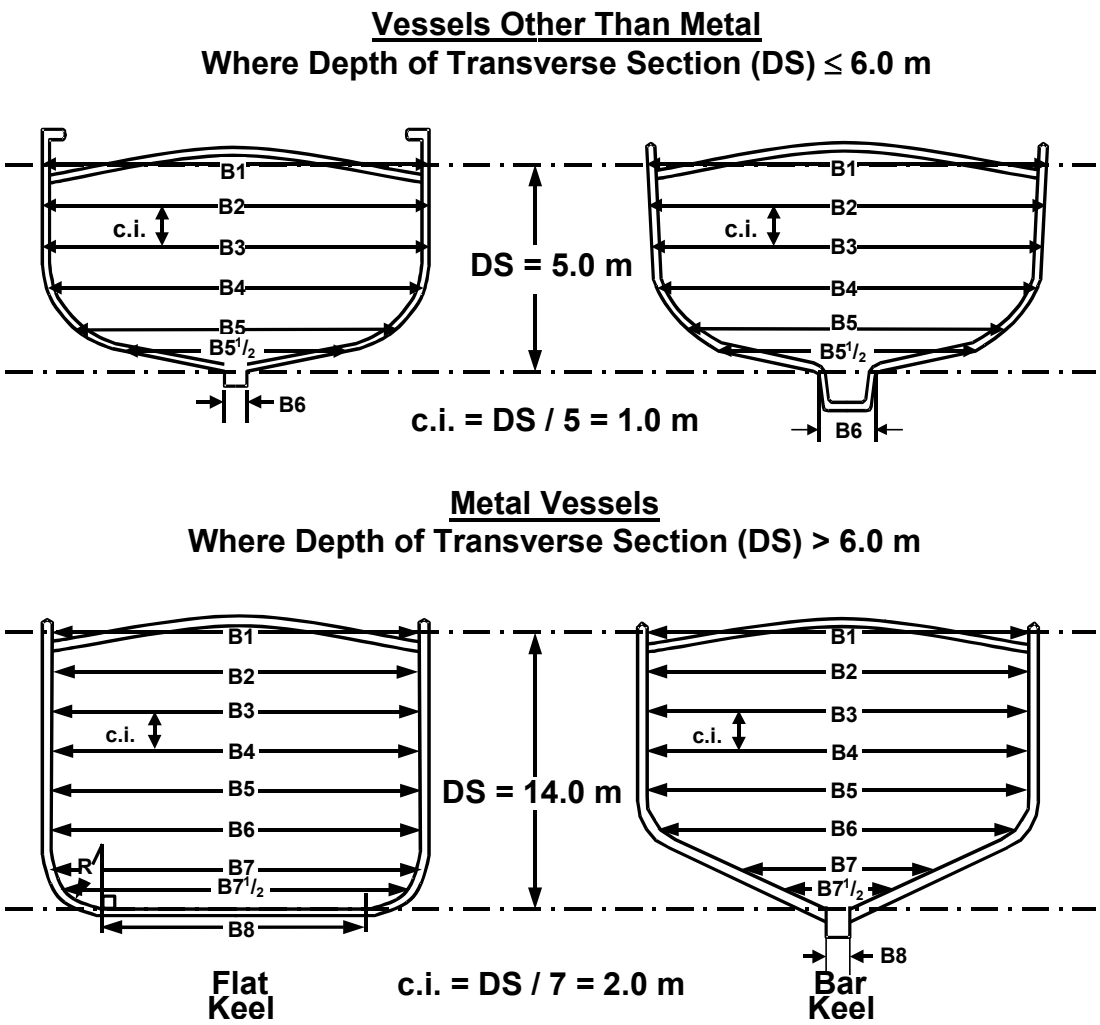

Figure 2.32 – Calculation of Volume with Stepped Upper Deck ***(subsection 2.8.9.2)***

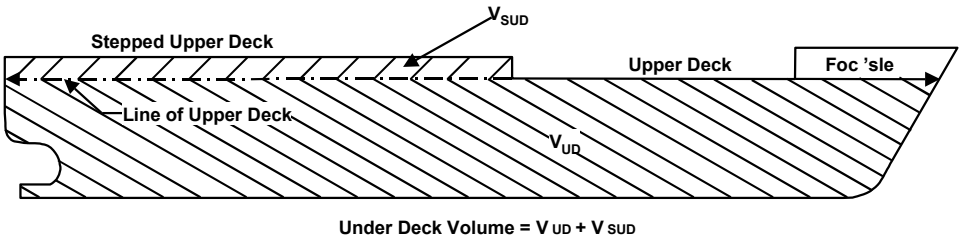

Figure 2.33 – Overhang Beyond the Upper Deck ***(subsection 2.8.10.2)***

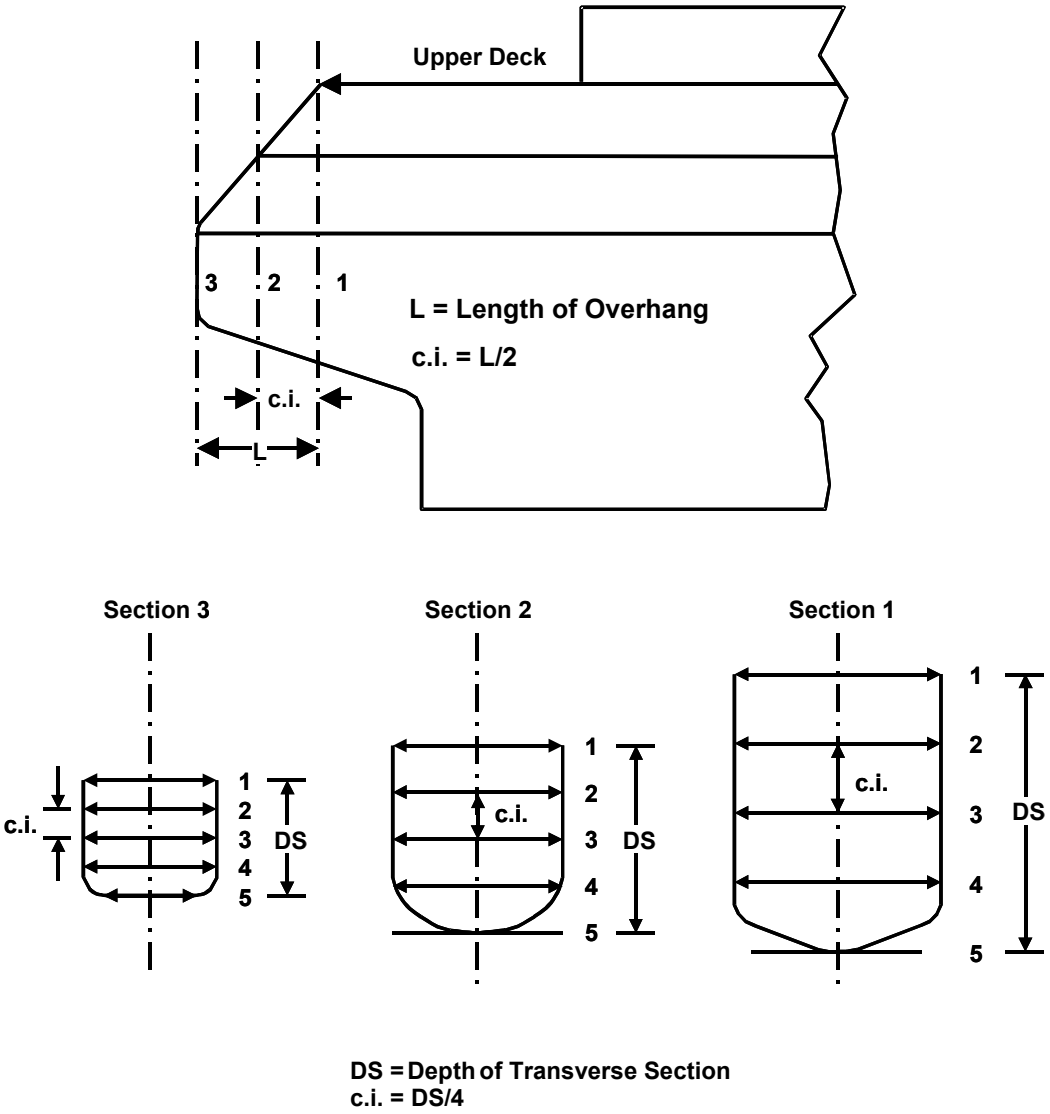

Figure 2.34 – Overhang Deck ***(subsection 2.8.10.3(b))***

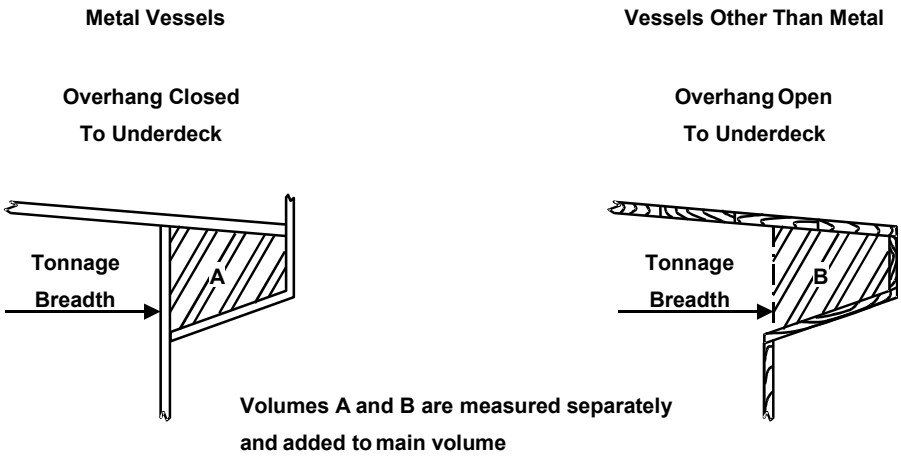

Figure 2.35 – Bulbous and Similar Bows ***(subsections 2.8.9.3 and 2.8.10.4)***

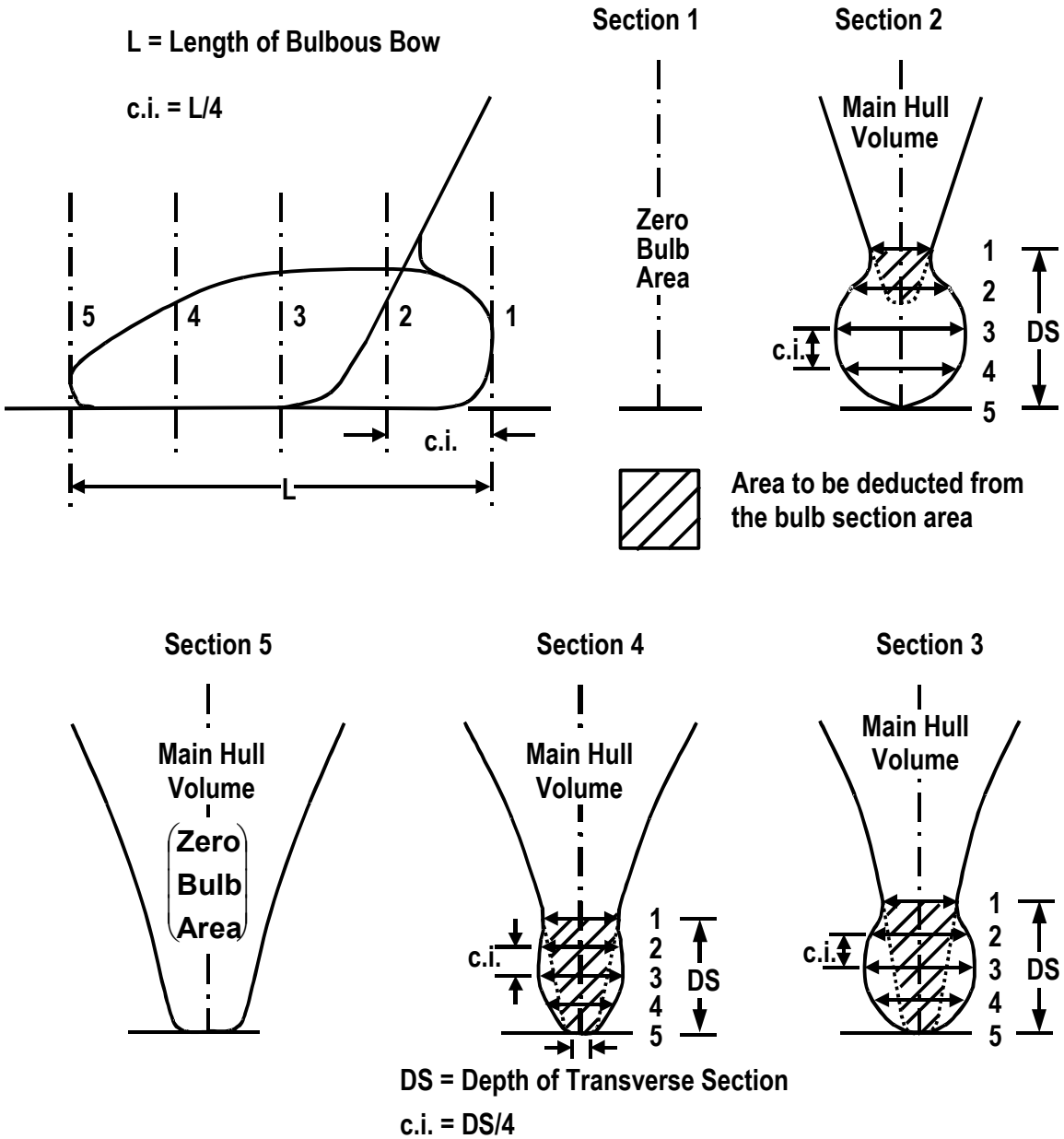

Figure 2.36 – Skegs and Keels ***(subsection 2.8.10.5)***

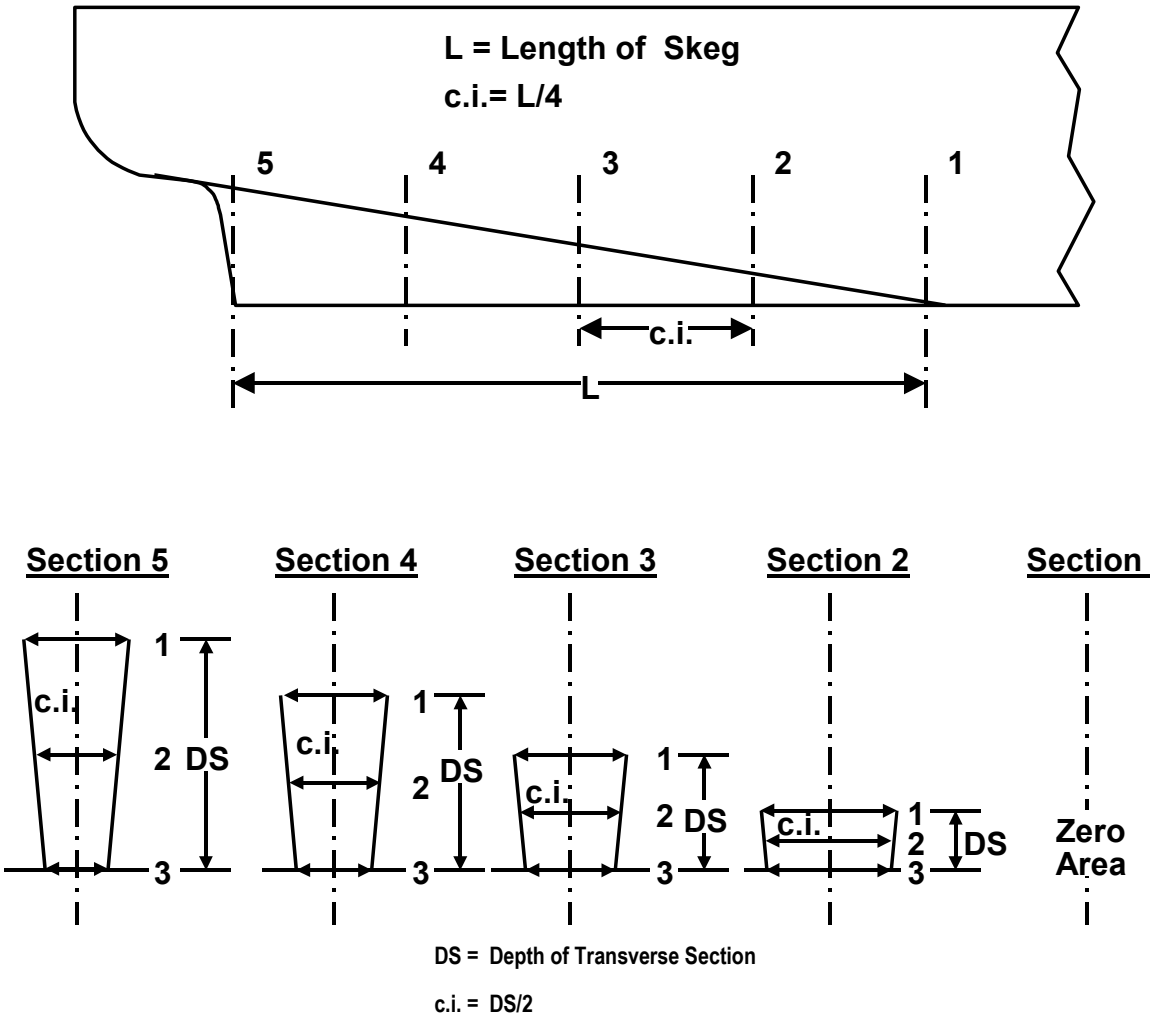

Figure 2.37 – Shaft Bossing ***(subsection 2.8.10.6)***

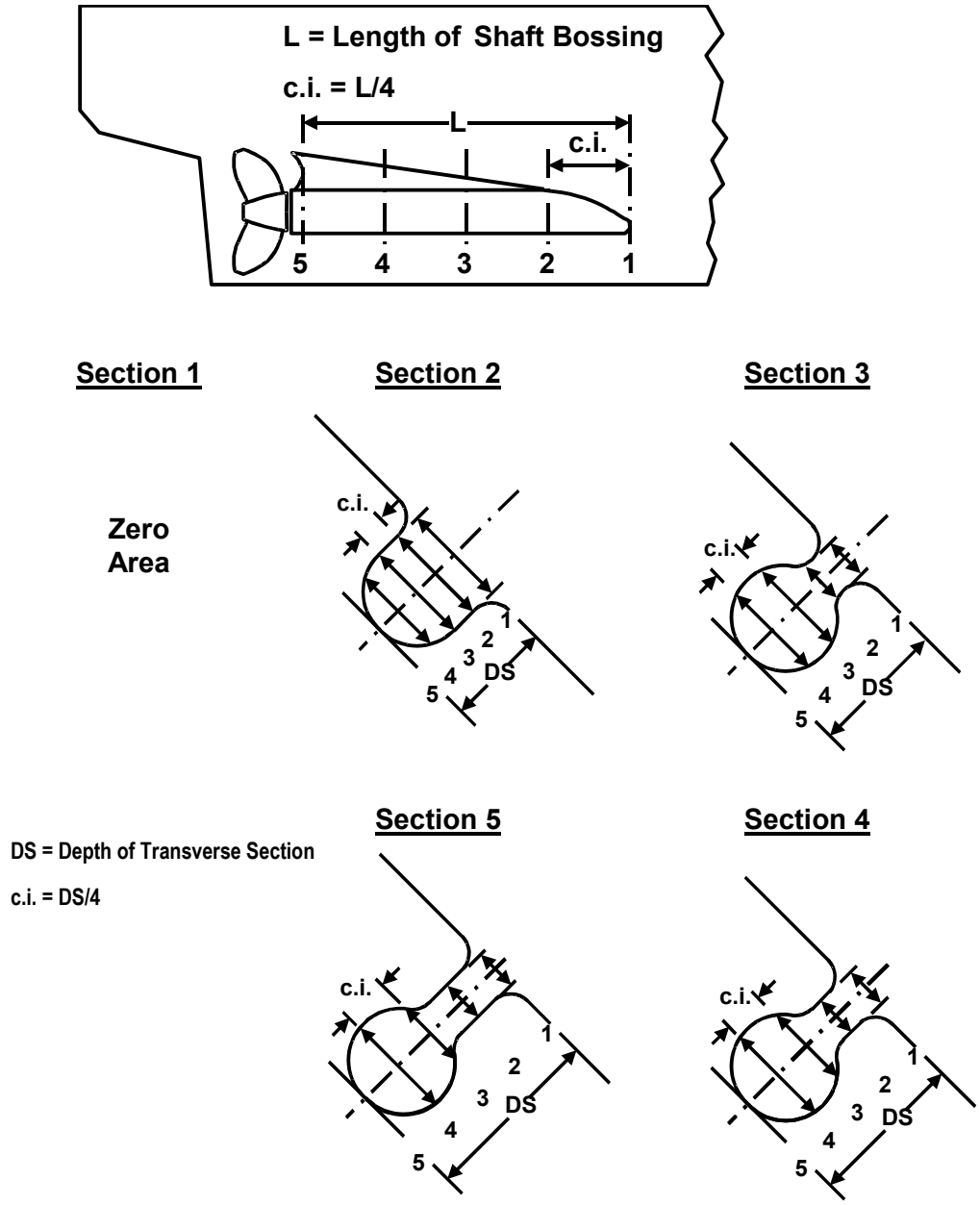

Figure 2.38 – Termination of Measurements ***(subsection 2.9.2.2)***

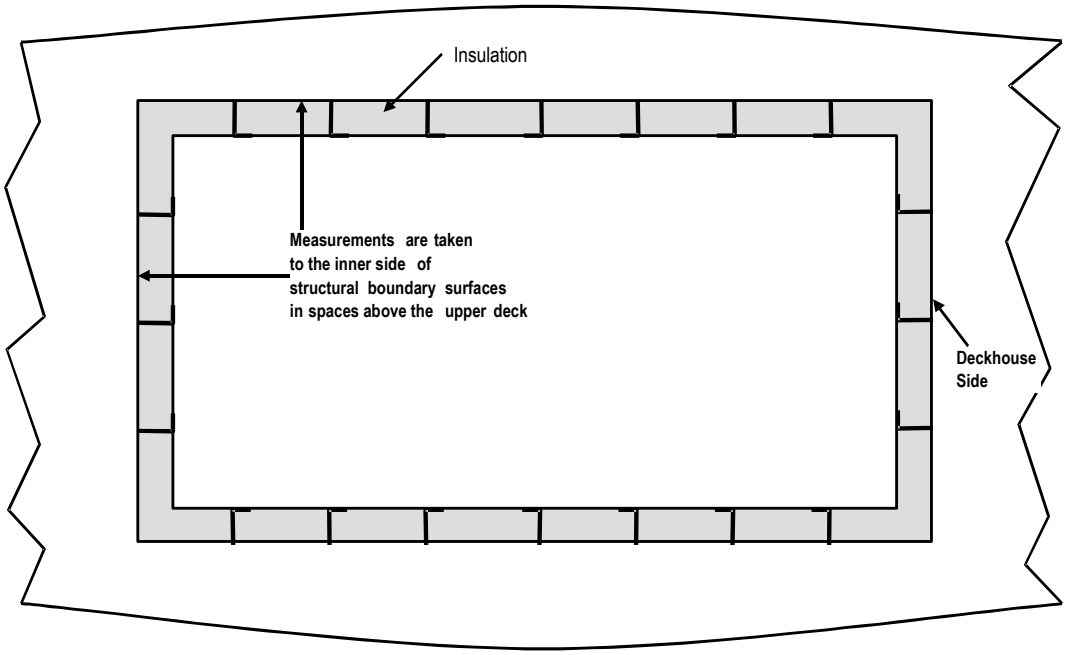

Figure 2.39 – Breaks Forward and Foc'sles ***(subsection 2.9.4.1(c))***

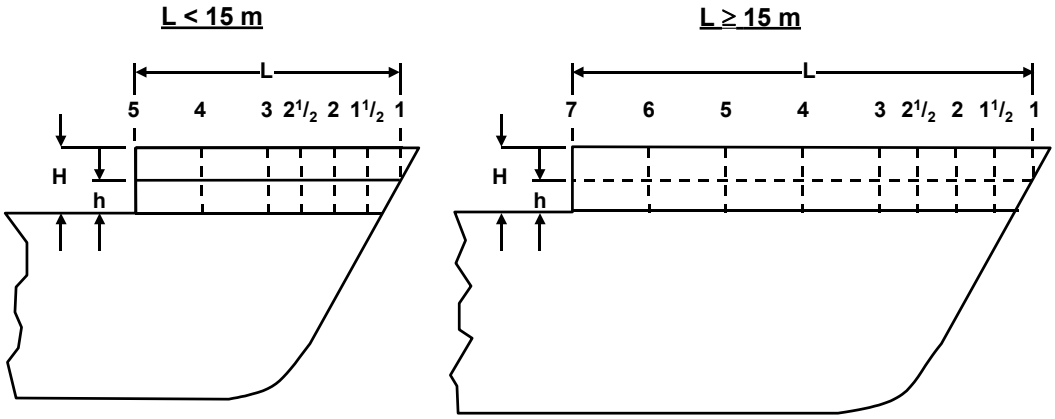

L = Mean Length of Space
H = Height of Space
h = H/2

Figure 2.40 – Breaks Aft and Poops ***(subsection 2.9.4.1(d))***

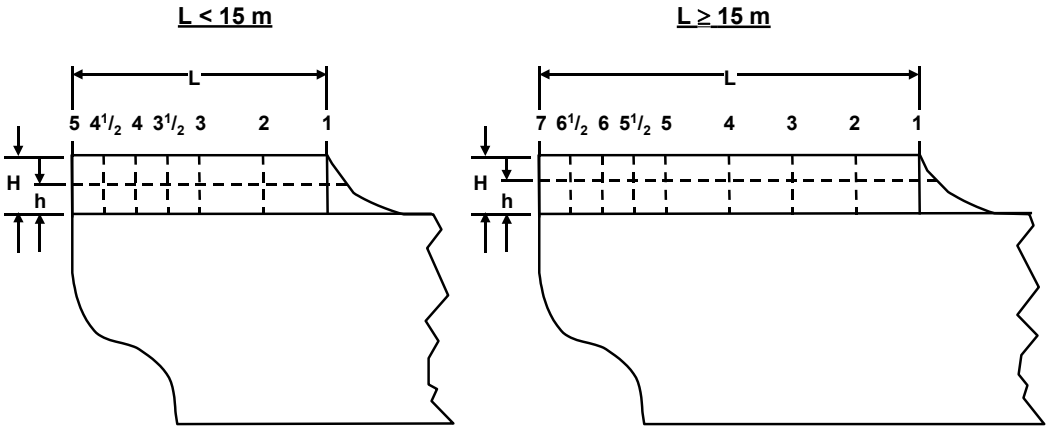

L = Mean Length of Space
H = Height of Space
h = H/2

Figure 3.1 (a) – Tonnage Measurement Dimensions TML, TMB, TMD for a vessel that does not meet the requirements for Upper deck *(subsections 3.2.6; 3.2.7.3 and 3.2.8)*

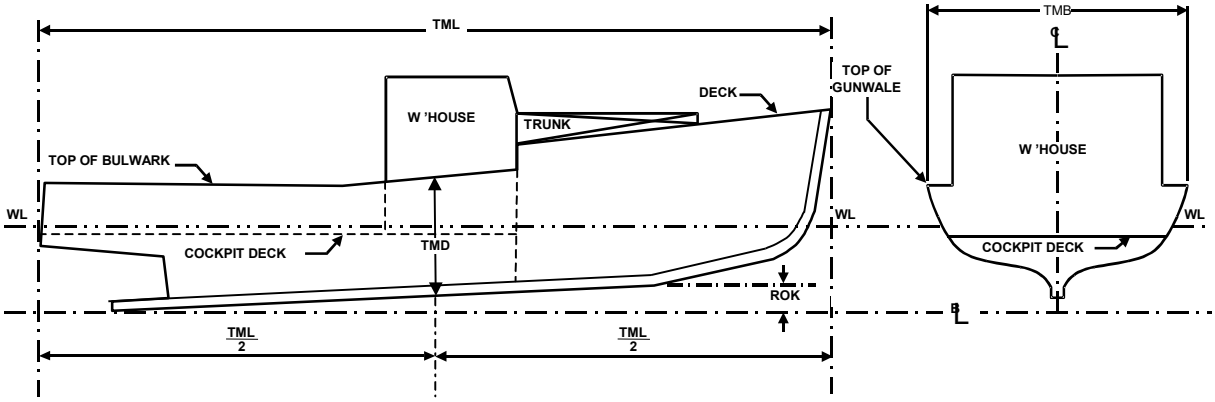

Figure 3.1 (b) – Tonnage Measurement Dimensions TML, TMB, TMD for a vessel that meets the requirements for Upper deck *(subsections 3.2.6; 3.2.7.1 and 3.2.8)*

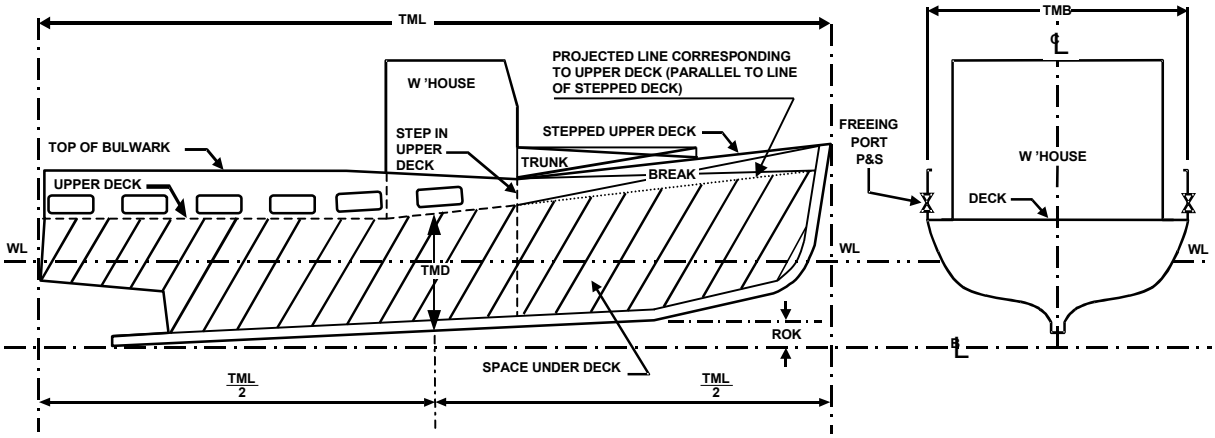

Figure 3.2 – TMB Measurement with Tumblehome ***(subsection 3.2.6)***

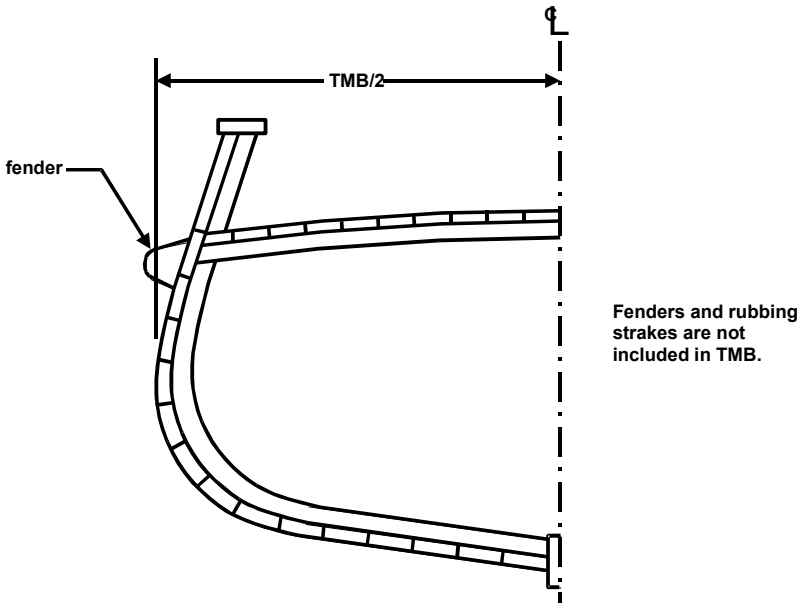

Figure 3.3 – Tonnage Measurement Depth *(TMD) (subsection 3.2.7)*

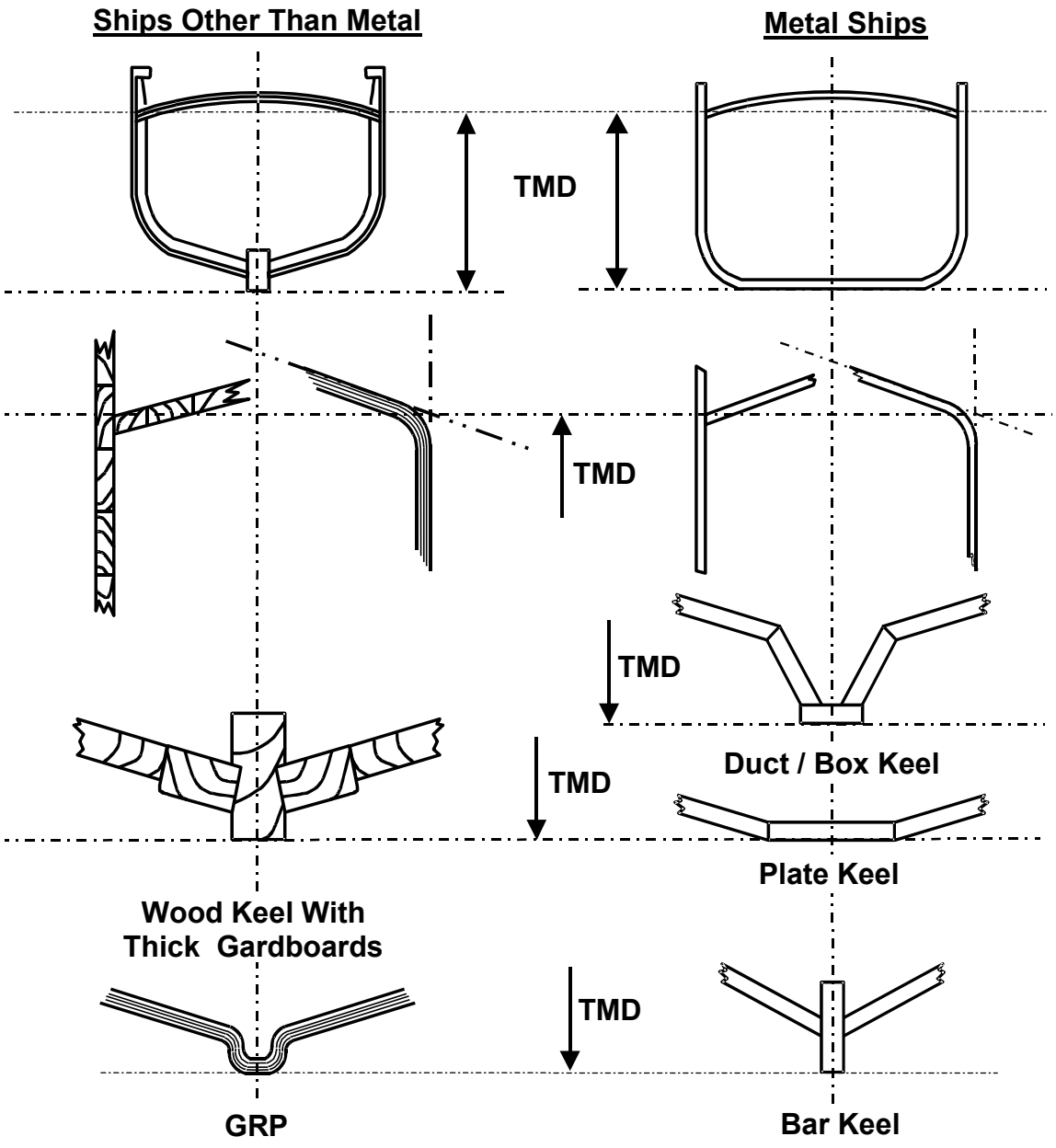

Figure 3.4 – Tonnage Measurement Depth (TMD) ***(subsection 3.2.7)***

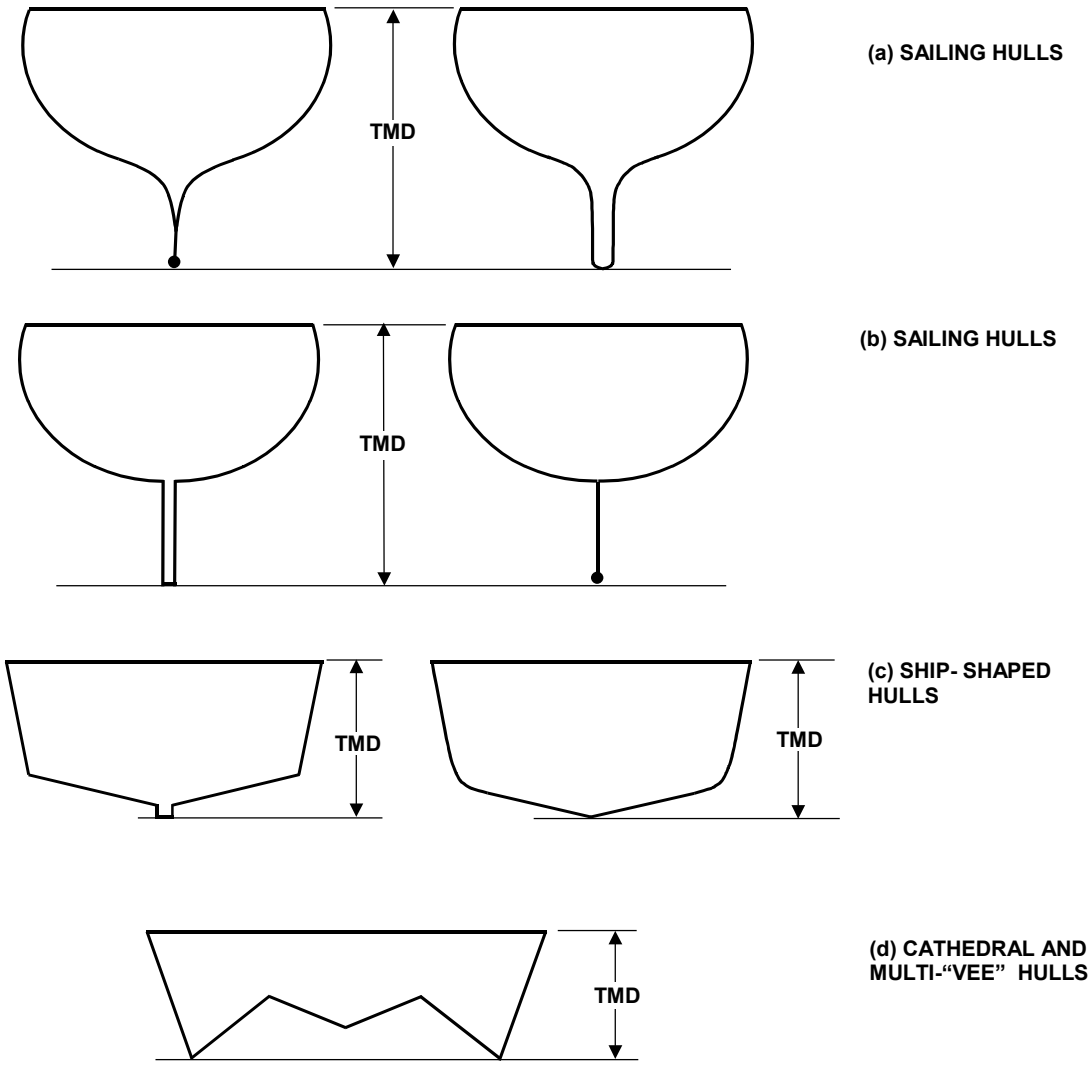

Figure 3.5 – Measurement of the total combined length of a single tier of deckhouse/superstructure and a break *(sections 3.4.2 and 3.5.3.2)*

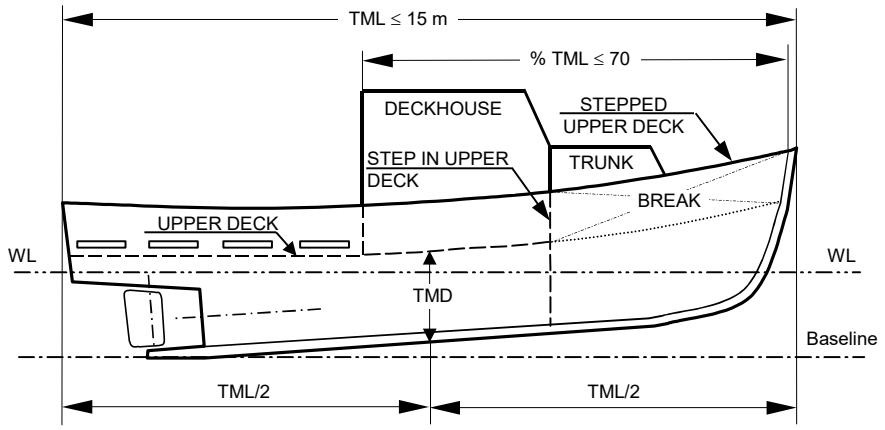
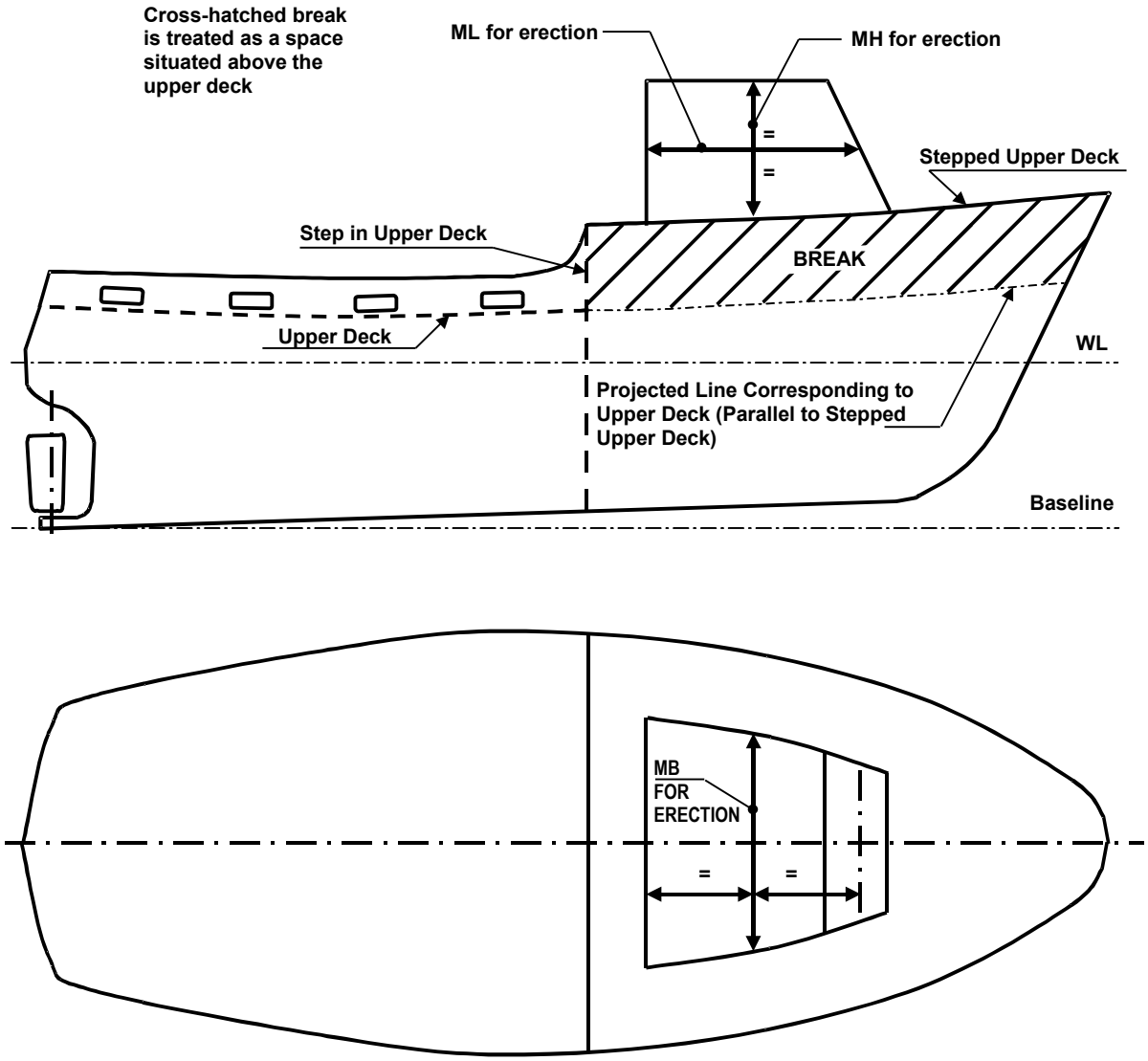
Figure 3.6 – Measurement of Spaces above the Upper Deck ***(subsection 3.5.3.1)***